NEW FEATURES

■5VZ-FE ENGINE

1. General

● The composition of the TWC (Three-Way Catalytic Converter) has been changed to comply with the LEV (Low Emission Vehicle) and SFTP (Supplementary Federal Test Procedure) emission regulations.

● The same link type ETCS-i (Electronic Throttle Control System-intelligent) that is used on the '03 Toyota Tundra with the 5VZ-FE engine has been adopted on the models other than Sport grade model. For details of ETCS-i control, refer to page 231.

● To comply with the OBD-II (On-Board Diagnosis II) regulations, all the DTC (Diagnostic Trouble Code) have been made to correspond to the SAE controlled codes. Some of the DTC have been further divided into smaller detection areas than in the past, and new DTC have been assigned to them. For details, refer to 2003 General Features section.

▶ Engine Specifications ◀

Model			'03 Model	'02 Model
No. of Cyls. & Arrangement			6-Cylinder, V Type	←
Valve Mechanism			24-Valve DOHC, Belt & Gear Drive	←
Combustion Chamber			Pentroof Type	←
Manifolds			Cross-Flow	←
Fuel System			SFI	←
Ignition System			DIS	←
Displacement cm^3 (cu. in.)			3378 (206.1)	←
Bore × Stroke mm (in.)			93.5 × 82.0 (3.68 × 3.23)	←
Compression			9.6 : 1	←
Max. Output SAE-NET			142 kW @ 4800 rpm (190 HP @ 4800 rpm)	←
Max. Torque SAE-NET			298 Nm @ 3600 rpm (220 ft lbf @ 3600 rpm)	←
Valve Timing	Intake	Open	4° BTDC	←
		Close	42° ABDC	←
	Exhaust	Open	46° BBDC	←
		Close	4° ATDC	←
Firing Order			1-2-3-4-5-6	←
Research Octane Number			91 or more	←
Emission Regulation			LEV and SFTP	—
Oil Grade			API SL-EC or ILSAC	←
Engine Service Mass kg (lb)			M/T : 189 (416.7) A/T : 179 (394.6)	←

2. Major Difference

Item	Outline
Engine Proper	The material of the intake and exhaust valve seats has been changed to one that excels in heat resistance.
Intake and Exhaust System	• Adoption of the ETCS-i* • Changed composition of TWC
Engine Control System	• Provided a linear type accelerator pedal position sensor in the throttle body* • Addition of failsafe functions related to ETCS-i*. • Correspondence of all DTC (Diagnostic Trouble Code) to SAE-controlled codes
Other	Configuration and structure are the same as ’02 model

*: except Sport grade model

3. TWC (Three-Way Catalytic Converter)

In place of the metallic type front TWC that was used on the ’02 model, the ’03 model has adopted an ultra thin-wall, ceramic type front TWC to improve exhaust gas reduction performance and comply with the LEV and SFTP emission regulations.

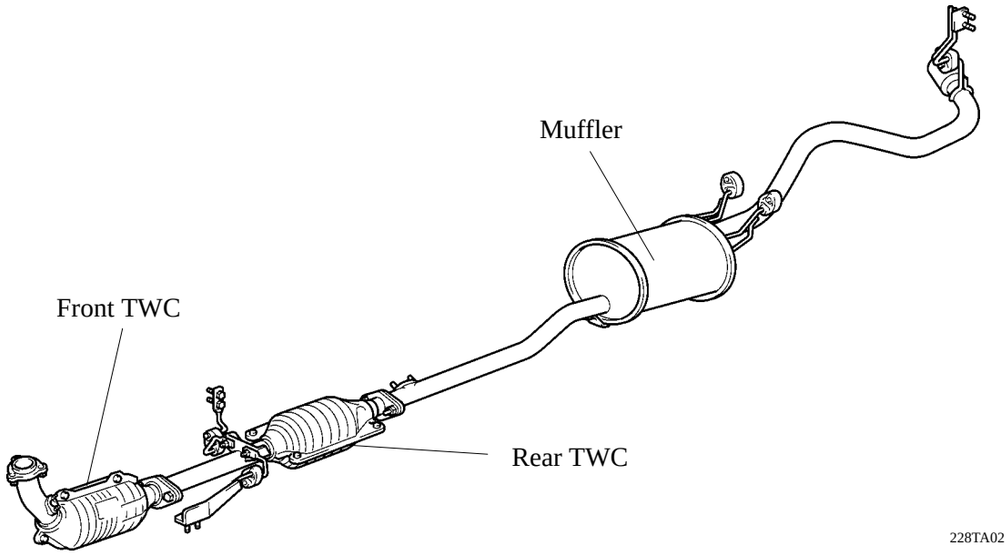

MAJOR TECHNICAL SPECIFICATIONS

Item / Area				U.S.A. and Canada			
Body Type				Regular Cab (2WD)		Extra Cab (2WD)	
Vehicle Grade				—, SR5*5			
Model Code				RZN140L-TRMDKAB	RZN140L-TRPDKAB	RZN150L-CRMDKAB	RZN150L-CRPDKAB
Major Dimensions & Vehicle Weights	Overall	Length	mm (in.)	4540 (178.7), 4685 (184.4)*3	4540 (178.7), 4685 (184.4)*3	5010 (197.2), 5155 (203.0)*3	5010 (197.2), 5155 (203.0)*3
		Width	mm (in.)	1690 (66.5)	1690 (66.5)	1690 (66.5)	1690 (66.5)
		Height	mm (in.)	1630 (64.2)*1, 1620 (63.8)*1, *2	1625 (64.0)*1, 1615 (63.6)*1, *2	1615 (63.6)*1, 1605 (63.2)*1, *2	1615 (63.6)*1, 1605 (63.2)*1, *2
	Wheel Base		mm (in.)	2625 (103.3)	2625 (103.3)	3095 (121.9)	3095 (121.9)
	Tread	Front	mm (in.)	1450 (57.1)	1450 (57.1)	1450 (57.1)	1450 (57.1)
		Rear	mm (in.)	1455 (57.3)	1455 (57.3)	1455 (57.3)	1455 (57.3)
	Effective Head Room	Front	mm (in.)	979 (38.5)	979 (38.5)	984 (38.7), 971 (38.2)*4	984 (38.7), 971 (38.2)*4
		Rear	mm (in.)	—	—	884 (34.8)	884 (34.8)
	Effective Leg Room	Front	mm (in.)	1059 (41.7)	1059 (41.7)	1088 (42.8)	1088 (42.8)
		Rear	mm (in.)	—	—	690 (27.2)	690 (27.2)
	Shoulder Room	Front	mm (in.)	1369 (53.9)	1369 (53.9)	1371 (54.0)	1371 (54.0)
		Rear	mm (in.)	—	—	1329 (52.3)	1329 (52.3)
	Cargo Space	Length	mm (in.)	—	—	—	—
		Width	mm (in.)	—	—	—	—
		Height	mm (in.)	—	—	—	—
	Overhang	Front	mm (in.)	820 (32.3)	820 (32.3)	820 (32.3)	820 (32.3)
		Rear	mm (in.)	1095 (43.1), 1240 (48.8)*3	1095 (43.1), 1240 (48.8)*3	1095 (43.1), 1240 (48.8)*3	1095 (43.1), 1240 (48.8)*3
	Min. Running Ground Clearance		mm (in.)	215 (8.5), 205 (8.1)*2	215 (8.5), 205 (8.1)*2	215 (8.5), 205 (8.1)*2	215 (8.5), 205 (8.1)*2
	Angle of Approach		degrees	24°, 23°*2	24°, 23°*2	24°, 23°*2	24°, 23°*2
	Angle of Departure		degrees	28°, 20°*3	28°, 20°*3	26°, 19°*3	26°, 19°*3
	Curb Mass.	Front	kg (lb)	728 (1605)	737 (1625)	778 (1715)	787 (1735)
		Rear	kg (lb)	530 (1170)	531 (1170)	572 (1260)	572 (1260)
		Total	kg (lb)	1259 (2775)	1268 (2795)	1349 (2975)	1359 (2995)
	Gross Vehicle Mass.	Front	kg (lb)	—	—	—	—
		Rear	kg (lb)	—	—	—	—
		Total	kg (lb)	1925 (4250)	1925 (4250)	2040 (4500)	2040 (4500)
	Fuel Tank Capacity		L (U.S.gal., lmp.gal.)	60.6 (160, 13.3)	60.6 (160, 13.3)	60.6 (160, 13.3)	60.6 (160, 13.3)
	Luggage Compartment Capacity		m^3 (cu.ft.)	—	—	—	—
Performance	Max. Speed		km/h (mph)	165 (103)	165 (103)	165 (103)	165 (103)
	Max. Cruising Speed		km/h (mph)	—	—	—	—
	Max. Permissible Speed	1st Gear	km/h (mph)	48 (30)	64 (40)	48 (30)	64 (40)
		2nd Gear	km/h (mph)	89 (55)	122 (76)	89 (55)	122 (76)
		3rd Gear	km/h (mph)	137 (85)	165 (103)	137 (85)	165 (103)
		4th Gear	km/h (mph)	165 (103)	—	165 (103)	—
	Turning Diameter (Outside Front)	Wall to Wall	m (ft.)	11.6 (38.1)	11.6 (38.1)	13.2 (43.3)	13.2 (43.3)
		Curb to Curb	m (ft.)	11.2 (36.7)	11.2 (36.7)	12.7 (41.7)	12.7 (41.7)
Engine	Engine Type			2RZ-FE	2RZ-FE	2RZ-FE	2RZ-FE
	Valve Mechanism			16-Valve, DOHC	16-Valve, DOHC	16-Valve, DOHC	16-Valve, DOHC
	Bore × Stroke		mm (in.)	95.0 × 86.0 (3.74 × 3.39)	95.0 × 86.0 (3.74 × 3.39)	95.0 × 86.0 (3.74 × 3.39)	95.0 × 86.0 (3.74 × 3.39)
	Displacement		cm^3 (cu.in.)	2438 (148.8)	2438 (148.8)	2438 (148.8)	2438 (148.8)
	Compression Ratio			9.5 : 1	9.5 : 1	9.5 : 1	9.5 : 1
	Carburetor Type			SFI	SFI	SFI	SFI
	Research Octane No.		RON	91 or more	91 or more	91 or more	91 or more
	Max. Output (SAE-NET)		kW/rpm (HP@rpm)	106 / 5000 (142@5000)	106 / 5000 (142@5000)	106 / 5000 (142@5000)	106 / 5000 (142@5000)
	Max. Torque (SAE-NET)		N·m/rpm (lb-ft@rpm)	217 / 4000 (160@4000)	217 / 4000 (160@4000)	217 / 4000 (160@4000)	217 / 4000 (160@4000)
Engine Electrical	Battery Capacity (5HR)		Voltage & Amp. hr.	12–48, 12–55*5	12–48, 12–55*5	12–55	12–55
	Alternator Output		Watts	960	960	960	960
	Starter Output		kW	1.4	1.4	1.4	1.4
Chassis	Clutch Type			Dry, Single, Diaphragm	—	Dry, Single, Diaphragm	—
	Transmission Type			W59	A44D	W59	A44D
	Transmission Gear Ratio	In First		3.954	2.826	3.954	2.826
		In Second		2.141	1.493	2.141	1.493
		In Third		1.384	1.000	1.384	1.000
		In Fourth		1.000	0.688	1.000	0.688
		In Fifth		0.810	—	0.810	—
		In Reverse		4.091	2.703	4.091	2.703
	Transfer Gear Ratio H4/H2			—	—	—	—
	Differential Gear Ratio (Front/Rear)			– / 3.583	– / 3.727	– / 3.583	– / 3.727
	Differential Gear Size (Front/Rear)		in.	– / 7.5”	– / 7.5”	– / 7.5”	– / 7.5”
	Brake Type	Front		Ventilated Disc	Ventilated Disc	Ventilated Disc	Ventilated Disc
		Rear		Leading-Trailing Drum	Leading-Trailing Drum	Leading-Trailing Drum	Leading-Trailing Drum
	Parking Brake Type			Leading-Trailing Drum	Leading-Trailing Drum	Leading-Trailing Drum	Leading-Trailing Drum
	Brake Booster Type and Size		in.	Single 10”	Single 10”	Single 10”	Single 10”
	Proportioning Valve Type			LSP and BV	LSP and BV	LSP and BV	LSP and BV
	Suspension Type	Front		Double Wishbone, coil	Double Wishbone, coil	Double Wishbone, coil	Double Wishbone, coil
		Rear		Rigid Leaf	Rigid Leaf	Rigid Leaf	Rigid Leaf
	Stabilizer Bar	Front		STD	STD	STD	STD
		Rear		—	—	—	—
	Steering Gear Type			Rack and Pinion	Rack and Pinion	Rack and Pinion	Rack and Pinion
	Steering Gear Ratio (Overall)			22.3, 20.4*7	22.3, 20.4*7	22.3, 20.4*7	22.3, 20.4*7
	Power Steering Type			Integral Type	Integral Type	Integral Type	Integral Type

*1: Unladen Vehicle
*2: With P235 / 70 R16 Tire
*3: With Rear Bumper
*4: With Moon Roof
*5: Option
*6: With ABS
*7: With Power Steering
*8: With P265 / 70 R16 Tire

U.S.A. and Canada					
Extra Cab (2WD)	Regular Cab (4WD)		Extra Cab (4WD)		
Sport	—, SR5*5, Limited*5				
VZN150L-CRMDKAB	RZN161L-TRMDKAB	RZN161L-TRPDKAB	RZN171L-CRMDKAB	RZN171L-CRPDKAB	VZN170L-CRMDKAB
5155 (203.0)	4685 (184.4)	4685 (184.4)	5155 (203.0)	5155 (203.0)	5155 (203.0)
1765 (69.5)	1690 (66.5), 1785 (70.3)*5	1690 (66.5), 1785 (70.3)*5	1690 (66.5), 1785 (70.3)*5	1690 (66.5), 1785 (70.3)*5	1690 (66.5), 1785 (70.3)*5
1590 (62.6)*1	1720 (67.7)*1, 1750 (68.9)*1, *8	1720 (67.7)*1, 1750 (68.9)*1, *8	1715 (67.5)*1, 1745 (68.7)*1, *8	1715 (67.5)*1, 1745 (68.7)*1, *8	1715 (67.5)*1, 1745 (68.7)*1, *8
3095 (121.9)	2625 (103.3)	2625 (103.3)	3095 (121.9)	3095 (121.9)	3095 (121.9)
1450 (57.1)	1460 (57.5), 1500 (59.1)*5	1460 (57.5), 1500 (59.1)*5	1460 (57.5), 1500 (59.1)*5	1460 (57.5), 1500 (59.1)*5	1460 (57.5), 1500 (59.1)*5
1455 (57.3)	1455 (57.3), 1495 (58.9)*5	1455 (57.3), 1495 (58.9)*5	1455 (57.3), 1495 (58.9)*5	1455 (57.3), 1495 (58.9)*5	1455 (57.3), 1495 (58.9)*5
984 (38.7), 971 (38.2)*4	979 (38.5)	979 (38.5)	984 (38.7), 971 (38.2)*4	984 (38.7), 971 (38.2)*4	984 (38.7), 971 (38.2)*4
884 (34.8)	—	—	884 (34.8)	884 (34.8)	884 (34.8)
1088 (42.8)	1059 (41.7)	1059 (41.7)	1088 (42.8)	1088 (42.8)	1088 (42.8)
690 (27.2)	—	—	690 (27.2)	690 (27.2)	690 (27.2)
1371 (54.0)	1369 (53.9)	1369 (53.9)	1371 (54.0)	1371 (54.0)	1371 (54.0)
1329 (52.3)	—	—	1329 (52.3)	1329 (52.3)	1329 (52.3)
—	—	—	—	—	—
—	—	—	—	—	—
—	—	—	—	—	—
820 (32.3)	820 (32.3)	820 (32.3)	820 (32.3)	820 (32.3)	820 (32.3)
1240 (48.8)	1240 (48.8)	1240 (48.8)	1240 (48.8)	1240 (48.8)	1240 (48.8)
195 (7.7)	280 (11.0), 305 (12.0)*8	280 (11.0), 305 (12.0)*8	275 (10.8), 305 (12.0)*8	275 (10.8), 305 (12.0)*8	275 (10.8), 305 (12.0)*8
23°	32°, 35°*8	32°, 35°*8	32°, 35°*8	32°, 35°*8	32°, 35°*8
19°	24°, 26°*8	24°, 26°*8	24°, 26°*8	24°, 26°*8	24°, 26°*8
814 (1795)	885 (1950)	898 (1980)	932 (2055)	946 (2085)	957 (2110)
615 (1355)	624 (1375)	624 (1375)	658 (1450)	658 (1450)	653 (1440)
1429 (3150)	1508 (3325)	1522 (3355)	1590 (3505)	1603 (3535)	1610 (3550)
—	—	—	—	—	—
—	—	—	—	—	—
2040 (4500)	2315 (5100)	2315 (5100)	2315 (5100)	2315 (5100)	2315 (5100)
60.6 (160, 13.3)	70.0 (18.5, 15.4)	70.0 (18.5, 15.4)	70.0 (18.5, 15.4)	70.0 (18.5, 15.4)	70.0 (18.5, 15.4)
—	—	—	—	—	—
180 (112)	165 (103)	165 (103)	165 (103)	165 (103)	165 (103)
—	—	—	—	—	—
54 (34)	46 (29)	62 (39)	46 (29)	62 (39)	47 (29)
101 (63)	85 (53)	113 (70)	85 (53)	113 (70)	88 (55)
146 (91)	132 (82)	165 (103)	132 (82)	165 (103)	127 (79)
180 (112)	165 (103)	—	165 (103)	—	165 (103)
13.2 (43.3)	11.2 (36.7)	11.2 (36.7)	12.9 (42.3)	12.9 (42.3)	12.9 (42.3)
12.7 (41.7)	10.5 (34.4)	10.5 (34.4)	12.2 (40.0)	12.2 (40.0)	12.2 (40.0)
5VZ-FE	3RZ-FE	3RZ-FE	3RZ-FE	3RZ-FE	5VZ-FE
24-Valve, DOHC	16-Valve, DOHC	16-Valve, DOHC	16-Valve, DOHC	16-Valve, DOHC	24-Valve, DOHC
93.5 × 82.0 (3.68 × 3.23)	95.0 × 95.0 (3.74 × 3.74)	95.0 × 95.0 (3.74 × 3.74)	95.0 × 95.0 (3.74 × 3.74)	95.0 × 95.0 (3.74 × 3.74)	93.5 × 82.0 (3.68 × 3.23)
3378 (206.1)	2694 (164.3)	2694 (164.3)	2694 (164.3)	2694 (164.3)	3378 (206.1)
9.6 : 1	9.5 : 1	9.5 : 1	9.5 : 1	9.5 : 1	9.6 : 1
SFI	SFI	SFI	SFI	SFI	SFI
91 or more	91 or more	91 or more	91 or more	91 or more	91 or more
142 / 4800 (190@4800)	112 / 4800 (150@4800)	112 / 4800 (150@4800)	112 / 4800 (150@4800)	112 / 4800 (150@4800)	142 / 4800 (190@4800)
298 / 3600 (220@3600)	240 / 4000 (177@4000)	240 / 4000 (177@4000)	240 / 4000 (177@4000)	240 / 4000 (177@4000)	298 / 3600 (220@3600)
12–55	12–55	12–55	12–55	12–55	12–55
960	960	960	960	960	960
1.4	1.4, 2.0*5	1.4, 2.0*5	1.4, 2.0*5	1.4, 2.0*5	1.4
Dry, Single Plate, Diaphragm	Dry, Single Plate, Diaphragm	—	Dry, Single Plate, Diaphragm	—	Dry, Single Plate, Diaphragm
R150	W59	A340F	W59	A340F	R150F
3.830	3.954	2.804	3.954	2.804	3.830
2.062	2.141	1.531	2.141	1.531	2.062
1.436	1.384	1.000	1.384	1.000	1.436
1.000	1.000	0.705	1.000	0.705	1.000
0.838	0.810	—	0.810	—	0.838
4.220	4.091	2.393	4.091	2.393	4.220
—	1000 / 2.566	1000 / 2.566	1000 / 2.566	1000 / 2.566	1000 / 2.566
– / 3.153	3.909 / 3.909, 4.300 / 4.300*8	4.100 / 4.100, 4.555 / 4.555*8	3.909 / 3.909, 4.300 / 4.300*8	4.100 / 4.100, 4.555 / 4.555*8	3.909 / 3.909, 4.100 / 4.100*8
– / 8”	7.5” / 8”	7.5” / 8”	7.5” / 8”	7.5” / 8”	7.5” / 8”
Ventilated Disc	Ventilated Disc	Ventilated Disc	Ventilated Disc	Ventilated Disc	Ventilated Disc
Leading-Trailing Drum	Leading-Trailing Drum	Leading-Trailing Drum	Leading-Trailing Drum	Leading-Trailing Drum	Leading-Trailing Drum
Leading-Trailing Drum	Leading-Trailing Drum	Leading-Trailing Drum	Leading-Trailing Drum	Leading-Trailing Drum	Leading-Trailing Drum
Single 10”	Single 10”	Single 10”	Single 10”	Single 10”	Single 10”
LSP and BV	LSP and BV	LSP and BV	LSP and BV	LSP and BV	LSP and BV
Double Wishbone, coil	Double Wishbone, coil	Double Wishbone, coil	Double Wishbone, coil	Double Wishbone, coil	Double Wishbone, coil
Rigid Leaf	Rigid Leaf	Rigid Leaf	Rigid Leaf	Rigid Leaf	Rigid Leaf
STD	STD	STD	STD	STD	STD
—	—	—	—	—	—
Rack and Pinion	Rack and Pinion	Rack and Pinion	Rack and Pinion	Rack and Pinion	Rack and Pinion
20.4	19.4	19.4	19.4	19.4	19.4
Integral Type	Integral Type	Integral Type	Integral Type	Integral Type	Integral Type

Item / Area				U.S.A. and Canada			
Body Type				Extra Cab (4WD)	Double Cab (4WD)	Regular Cab (Pre Runner)	Extra Cab (Pre Runner)
Vehicle Grade				—, SR5*5, Limited*5		—, SR5*5	
Model Code				VZN170L-CRPDKAB	VZN170L-PRPDKAB	RZN191L-TRPDKAB	RZN196L-CRPDKAB
Major Dimensions & Vehicle Weights	Overall	Length	mm (in.)	5155 (203.0)	5155 (203.0)	4685 (184.4)	5155 (203.0)
		Width	mm (in.)	1690 (66.5), 1785 (70.3)*5	1785 (70.3)	1690 (66.5), 1785 (70.3)*5	1690 (66.5), 1785 (70.3)*5
		Height	mm (in.)	1715 (67.5)*1, 1745 (68.7)*1, *8	1715 (67.5)*1, 1745 (68.7)*1, *8, *9	1720 (67.7)*1, 1750 (68.9)*1, *8	1715 (67.5)*1, 1745 (68.7)*1, *8
	Wheel Base		mm (in.)	3095 (121.9)	3095 (121.9)	2625 (103.3)	3095 (121.9)
	Tread	Front	mm (in.)	1460 (57.5), 1500 (59.1)*5	1460 (57.5), 1500 (59.1)*5	1460 (57.5), 1500 (59.1)*5	1460 (57.5), 1500 (59.1)*5
		Rear	mm (in.)	1455 (57.3), 1495 (58.9)*5	1455 (57.3), 1495 (58.9)*5	1455 (57.3), 1495 (58.9)*5	1455 (57.3), 1495 (58.9)*5
	Effective Head Room	Front	mm (in.)	984 (38.7), 971 (38.2)*4	988 (38.9), 981 (38.6)*1	979 (38.5)	984 (38.7), 971 (38.2)*4
		Rear	mm (in.)	884 (34.8)	961 (37.8)	—	884 (34.8)
	Effective Leg Room	Front	mm (in.)	1088 (42.8)	1088 (42.8)	1059 (41.7)	1088 (42.8)
		Rear	mm (in.)	690 (27.2)	858 (33.8)	—	690 (27.2)
	Shoulder Room	Front	mm (in.)	1371 (54.0)	1371 (54.0)	1369 (53.9)	1371 (54.0)
		Rear	mm (in.)	1329 (52.3)	1360 (53.5)	—	1329 (52.3)
	Cargo Space	Length	mm (in.)	—	—	—	—
		Width	mm (in.)	—	—	—	—
		Height	mm (in.)	—	—	—	—
	Overhang	Front	mm (in.)	820 (32.3)	820 (32.3)	820 (32.3)	820 (32.3)
		Rear	mm (in.)	1240 (48.8)	1240 (48.8)	1240 (48.8)	1240 (48.8)
	Min. Running Ground Clearance		mm (in.)	275 (10.8), 305 (12.0)*8	255 (10.0), 285 (11.2)	280 (11.0), 305 (12.0)*8	275 (10.8), 305 (12.0)*8
	Angle of Approach		degrees	32°, 35°*8	30°, 33°*8	32°, 35°*8	32°, 35°*8
	Angle of Departure		degrees	24°, 26°*8	23°, 25°*8	24°, 26°*8	24°, 26°*8
	Curb Mass.	Front	kg (lb)	968 (2135)	996 (2195)	807 (1780)	853 (1880)
		Rear	kg (lb)	653 (1440)	701 (1545)	612 (1350)	646 (1425)
		Total	kg (lb)	1622 (3575)	1696 (3740)	1420 (3130)	1499 (3505)
	Gross Vehicle Mass.	Front	kg (lb)	—	—	—	—
		Rear	kg (lb)	—	—	—	—
		Total	kg (lb)	2315 (5100)	2315 (5100)	2315 (5100)	2315 (5100)
	Fuel Tank Capacity		L (U.S.gal., lmp.gal.)	70.0 (18.5, 15.4)	70.0 (18.5, 15.4)	70.0 (18.5, 15.4)	70.0 (18.5, 15.4)
	Luggage Compartment Capacity		m^3 (cu.ft.)	—	—	—	—
Performance	Max. Speed		km/h (mph)	165 (103)	165 (103)	165 (103)	165 (103)
	Max. Cruising Speed		km/h (mph)	—	—	—	—
	Max. Permissible Speed	1st Gear	km/h (mph)	65 (40)	65 (40)	65 (40)	62 (39)
		2nd Gear	km/h (mph)	119 (74)	119 (74)	119 (74)	113 (70)
		3rd Gear	km/h (mph)	165 (103)	165 (103)	165 (103)	165 (103)
		4th Gear	km/h (mph)	—	—	—	—
	Turning Diameter (Outside Front)	Wall to Wall	m (ft.)	12.9 (42.3)	12.9 (42.3)	11.2 (36.7)	12.9 (42.3)
		Curb to Curb	m (ft.)	12.2 (40.0)	12.2 (40.0)	10.5 (34.4)	12.2 (40.0)
Engine	Engine Type			5VZ-FE	5VZ-FE	3RZ-FE	3RZ-FE
	Valve Mechanism			24-Valve, DOHC	24-Valve, DOHC	16-Valve, DOHC	16-Valve, DOHC
	Bore × Stroke		mm (in.)	93.5 × 82.0 (3.68 × 3.23)	93.5 × 82.0 (3.68 × 3.23)	95.0 × 95.0 (3.74 × 3.74)	95.0 × 95.0 (3.74 × 3.74)
	Displacement		cm^3 (cu.in.)	3378 (206.1)	3378 (206.1)	2694 (164.3)	2694 (164.3)
	Compression Ratio			9.6 : 1	9.6 : 1	9.5 : 1	9.5 : 1
	Carburetor Type			SFI	SFI	SFI	SFI
	Research Octane No.		RON	91 or more	91 or more	91 or more	91 or more
	Max. Output (SAE-NET)		kW/rpm (HP@rpm)	142 / 4800 (190@4800)	142 / 4800 (190@4800)	112 / 4800 (150@4800)	112 / 4800 (190@4800)
	Max. Torque (SAE-NET)		N·m/rpm (lb-ft@rpm)	298 / 3600 (220@3600)	298 / 3600 (220@3600)	240 / 4000 (177@4000)	240 / 4000 (177@4000)
Engine Electrical	Battery Capacity (5HR)		Voltage & Amp. hr.	12–55	12–55	12–55	12–55
	Alternator Output		Watts	960	960	960	960
	Starter Output		kW	1.4, 1.8*5	1.4, 1.8*5	1.4, 2.0*5	1.4, 2.0*5
Chassis	Clutch Type			—	—	—	—
	Transmission Type			A340F	A340F	A340E	A340E
	Transmission Gear Ratio	In First		2.804	2.804	2.804	2.804
		In Second		1.531	1.531	1.531	1.531
		In Third		1.000	1.000	1.000	1.000
		In Fourth		0.705	0.705	0.705	0.705
		In Fifth		—	—	—	—
		In Reverse		2.393	2.393	2.393	2.393
	Transfer Gear Ratio H4/H2			1.000 / 2.566	1.000 / 2.566	—	—
	Differential Gear Ratio (Front/Rear)			3.909 / 3.909, 4.100 / 4.100*8	3.909 / 3.909, 4.100 / 4.100*8	– / 3.909, 4.300*8	– / 4.100, 4.555*8
	Differential Gear Size (Front/Rear)		in.	7.5” / 8”	7.5” / 8”	– / 8”	– / 8”
	Brake Type	Front		Ventilated Disc	Ventilated Disc	Ventilated Disc	Ventilated Disc
		Rear		Leading-Trailing Drum	Leading-Trailing Drum	Leading-Trailing Drum	Leading-Trailing Drum
	Parking Brake Type			Leading-Trailing Drum	Leading-Trailing Drum	Leading-Trailing Drum	Leading-Trailing Drum
	Brake Booster Type and Size		in.	Single 10”	Single 10”	Single 10”	Single 10”
	Proportioning Valve Type			LSP and BV	LSP and BV	LSP and BV	LSP and BV
	Suspension Type	Front		Double Wishbone, Coil	Double Wishbone, Coil	Double Wishbone, Coil	Double Wishbone, Coil
		Rear		Rigid Leaf	Rigid Leaf	Rigid Leaf	Rigid Leaf
	Stabilizer Bar	Front		STD	STD	STD	STD
		Rear		—	—	—	—
	Steering Gear Type			Rack and Pinion	Rack and Pinion	Rack and Pinion	Rack and Pinion
	Steering Gear Ratio (Overall)			19.4	19.4	19.4	19.4
	Power Steering Type			Integral Type	Integral Type	Integral Type	Integral Type

*1: Unladen Vehicle
*2: With P235 / 70 R16 Tire
*3: With Rear Bumper
*4: With Moon Roof
*5: Option
*6: With ABS
*7: With Power Steering
*8: With P265 / 70 R16 Tire
*9: With Roof-Rack: +65 mm (2.6 in.)

U.S.A. and Canada		
Double Cab (Pre Runner)	Extra Cab (Pre Runner)	Double Cab (Pre Runner)
—, SR5*5		
RZN196L-PRPDKAB	VZN195L-CRPDKAB	VZN195L-PRPDKAB
5155 (203.0)	5155 (203.0)	5155 (203.0)
1785 (70.3)	1690 (66.5), 1785 (70.3)*5	1785 (70.3)
1715 (67.5)*1, *9, 1745 (68.7)*1, *8, *9	1720 (67.7)*1, 1750 (68.9)*1, *8	1715 (67.5)*1, *9, 1745 (68.7)*1, *8, *9
3095 (121.9)	3095 (121.9)	3095 (121.9)
1460 (57.5), 1500 (59.1)*5	1460 (57.5), 1500 (59.1)*5	1460 (57.5), 1500 (59.1)*5
1455 (57.3), 1495 (58.9)*5	1455 (57.3), 1495 (58.9)*5	1455 (57.3), 1495 (58.9)*5
998 (38.9), 981 (38.6)*4	984 (38.7), 971 (38.2)*4	988 (38.9), 981 (38.6)*4
961 (37.8)	884 (34.8)	961 (37.8)
1088 (42.8)	1088 (42.8)	1088 (42.8)
858 (33.8)	690 (27.2)	858 (33.8)
1371 (54.0)	1371 (54.0)	1371 (54.0)
1360 (53.5)	1329 (52.3)	1360 (53.5)
—	—	—
—	—	—
—	—	—
820 (32.3)	820 (32.3)	820 (32.3)
1240 (48.8)	1240 (48.8)	1240 (48.8)
255 (10.0), 285 (11.2)*8	275 (10.8), 305 (12.0)*8	255 (10.0), 285 (11.2)*8
30°, 33°*8	32°, 35°*8	30°, 33°*8
23°, 25°*8	24°, 26°*8	23°, 25°*8
878 (1935)	878 (1935)	902 (1990)
694 (1530)	642 (1415)	689 (1520)
1572 (3465)	1520 (3350)	1592 (3510)
—	—	—
—	—	—
2315 (5100)	2315 (5100)	2315 (5100)
70.0 (18.5, 15.4)	70.0 (18.5, 15.4)	70.0 (18.5, 15.4)
—	—	—
165 (103)	165 (103)	165 (103)
—	—	—
62 (39)	65 (40)	65 (40)
113 (70)	119 (74)	119 (74)
165 (103)	165 (103)	165 (103)
—	—	—
12.9 (42.3)	12.9 (42.3)	12.9 (42.3)
12.2 (40.0)	12.2 (40.0)	12.2 (40.0)
3RZ-FE	5VZ-FE	5VZ-FE
16-Valve, DOHC	24-Valve, DOHC	24-Valve, DOHC
95.0 × 95.0 (3.74 × 3.74)	93.5 × 82.0 (3.68 × 3.23)	93.5 × 82.0 (3.68 × 3.23)
2694 (164.3)	3378 (206.1)	3378 (206.1)
9.5 : 1	9.6 : 1	9.6 : 1
SFI	SFI	SFI
91 or more	91 or more	91 or more
112 / 4800 (150@4800)	142 / 4800 (190@4800)	142 / 4800 (190@4800)
240 / 4000 (177@4000)	298 / 3600 (220@3600)	298 / 3600 (220@3600)
12–55	12–55	12–55
960	960	960
1.4, 2.0*5	1.4, 1.8*5	1.4, 1.8*5
—	—	—
A340E	A340E	A340E
2.804	2.804	2.804
1.531	1.531	1.531
1.000	1.000	1.000
0.705	0.705	0.705
—	—	—
2.393	2.393	2.393
—	—	—
– / 4.100, 4.555*8	– / 3.900, 4.100*2	– / 3.900, 4.100*2
– / 8”	– / 8”	– / 8”
Ventilated Disc	Ventilated Disc	Ventilated Disc
Leading-Trailing Drum	Leading-Trailing Drum	Leading-Trailing Drum
Leading-Trailing Drum	Leading-Trailing Drum	Leading-Trailing Drum
Single 10”	Single 10”	Single 10”
LSP and BV	LSP and BV	LSP and BV
Double Wishbone, Coil	Double Wishbone, Coil	Double Wishbone, Coil
Rigid Leaf	Rigid Leaf	Rigid Leaf
STD	STD	STD
—	—	—
Rack and Pinion	Rack and Pinion	Rack and Pinion
19.4	19.4	19.4
Integral Type	Integral Type	Integral Type

TACOMA

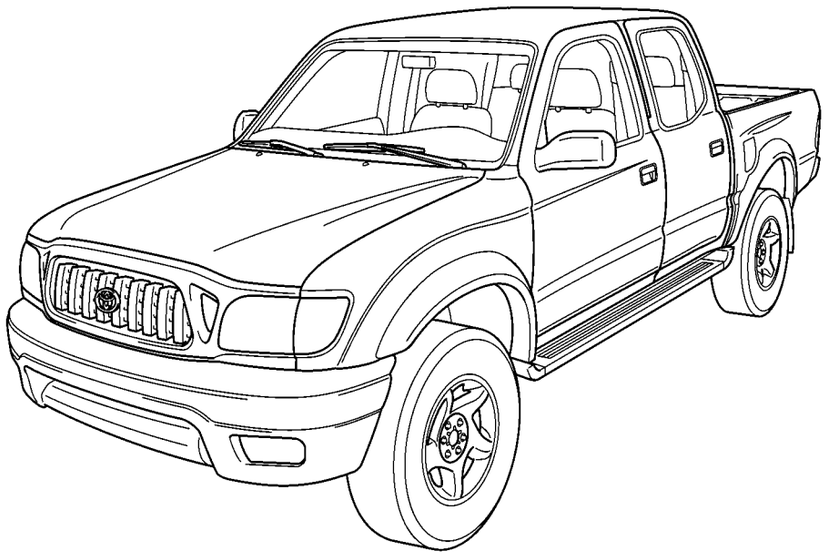

228TA03

12

TOYOTA TACOMA

OUTLINE OF NEW FEATURES

The following changes are made for the 2003 model year.

1. 2RZ-FE and 3RZ-FE Engine

To comply with the OBD-II (On-Board Diagnosis II) regulations, all the DTC (Diagnostic Trouble Code) have been made to correspond to the SAE controlled codes. For details, refer to 2003 General Features section.

2. 5VZ-FE Engine

- The composition of the TWC (Three-Way Catalytic Converter) has been changed to comply with the LEV (Low Emission Vehicle) and SFTP (Supplementary Federal Test Procedure) emission regulations.
- The same link type ETCS-i (Electronic Throttle Control System-intelligent) that is used on the ’03 Toyota Tundra with the 5VZ-FE engine has been adopted on the models other than Sport grade model.
- To comply with the OBD-II (On-Board Diagnosis II) regulations, all the DTC (Diagnostic Trouble Code) have been made to correspond to the SAE controlled codes. Some of the DTC have been further divided into smaller detection areas than in the past, and new DTC have been assigned to them. For details, refer to 2003 General Features section.

3. A340E and A340F Automatic Transmission

- The line pressure control using a linear solenoid valve (SLT), which was adopted on the ’02 Toyota Tundra with the 2UZ-FE engine, has also been adopted on the ’03 Toyota Tacoma with the 5VZ-FE engine. Accordingly, the shape of the valve body and the logic of the ECM have been changed.
- The previous mechanical control, which consisted of a throttle cable, cam, and throttle valve, has been changed to an electronic control system that uses a solenoid valve SLT.
- The automatic transmission fluid of 3RZ-FE and 5VZ-FE engine model has been changed from the D-II type ATF to the T-IV type ATF.

4. Brake

- The ABS brake control system, which was optional equipment on the ’02 model, is now standard equipment on all models.
- The brake actuator with skid control ECU has been changed from the one made by Continental Teves on the ’02 model to one made by ADVICS. However, the basic construction and operation are the same as the ’02 model.
- In place of the pendulum type deceleration sensor used previously in the ABS brake control system of the 4WD and Prerunner models, a semiconductor type deceleration sensor has been adopted.
- The incremental type hydraulic auto adjuster to automatically adjust the clearance between the shoes and drum has been adopted on rear brake for 4WD and Prerunner models.

5. Seat

CRS (Child Restrain System) lower anchorage for securing child seats is provided behind the seat cushion of the front or rear seat

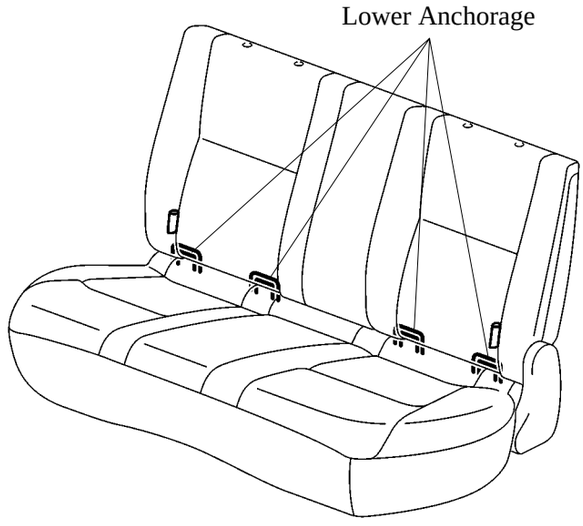

Double Cab Model Rear Seat

○ : available — : not available

	Front Seat			Rear Seat	
	Regular Cab	Extra Cab	Double Cab	Extra Cab	Double Cab
LH Side	—	—	—	—	○
RH Side	○	○	—	—	○

6. Cruise Control System

- On the models with the 5VZ-FE engine other than Sport grade model, the cruise control has been changed to one that is controlled by the ETCS-i. Accordingly, the components of the system have been changed as follows:
  - Cruise control ECU is integrated in the ECM.
  - Cruise control actuator and control cable has been discontinued.
  - Throttle control motor, throttle position sensor and accelerator pedal position sensor have been adopted.
- The basic construction and operation are the same as ’03 Celica. For details, refer to page 76.

AC077–03

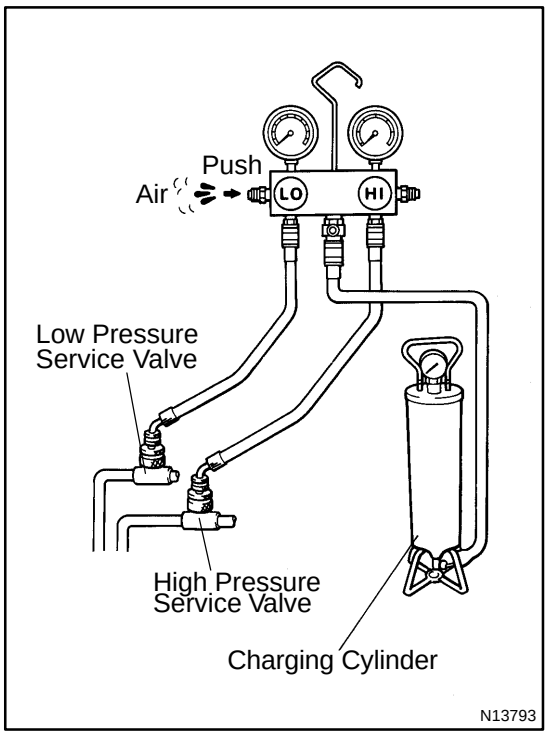

CHARGING

1. INSTALL CHARGING CYLINDER

HINT:

When handling the charging cylinder, always follow the directions given in the instruction manual.

(a) Charge the proper amount of refrigerant into the charging cylinder.

(b) Connect the center hose to the charging cylinder.

CAUTION:

Do not open both high and low hand valves of manifold gauge set.

(c) Open the valve of charging cylinder.

(d) Press the valve core on the side of manifold gauge and expel the air inside of the center hose.

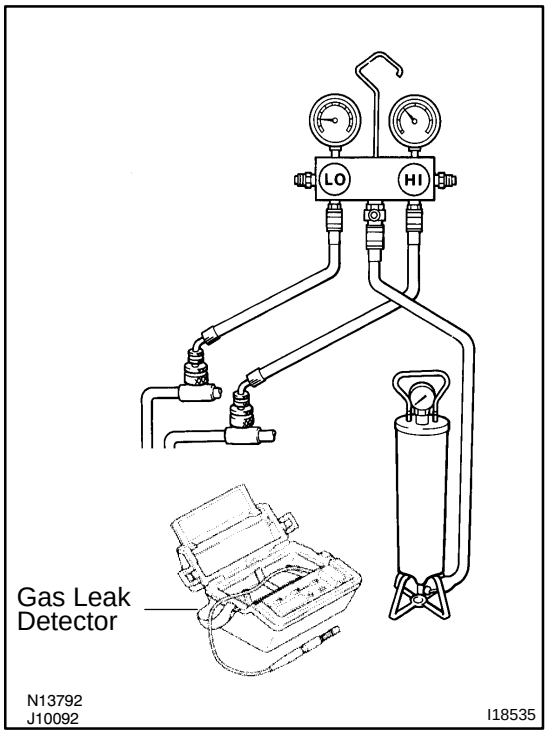

2. INSPECT REFRIGERATION SYSTEM FOR LEAKS

(a) Open the high pressure hand valve and charge refrigerant.

(b) When the low pressure gauge indicates 98 kPa (1 kgf/cm^2, 14 psi) close the high pressure hand valve.

(c) Using a gas leak detector, check the system for leakage.

If leak is found, repair the faulty component or connection.

CAUTION:

Use the refrigerant recovery/ recycling machine to recover the refrigerant whenever replacing parts.

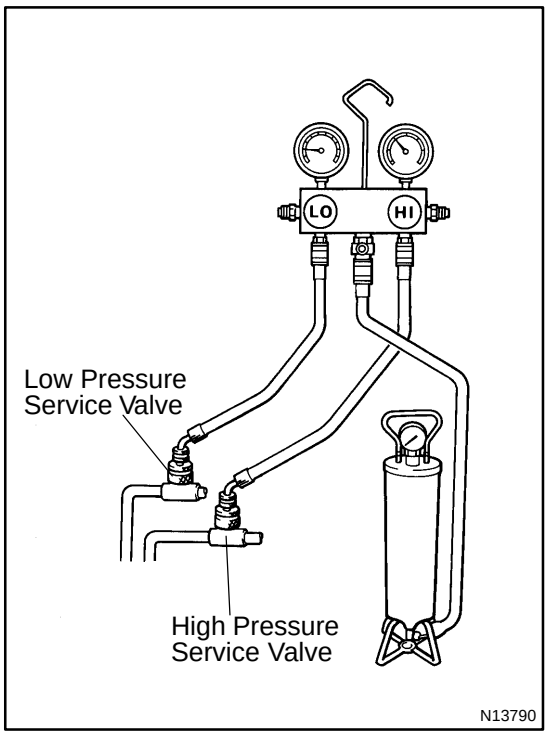

3. CHARGE REFRIGERANT INTO REFRIGERANT SYSTEM

If there is no leakafter refrigerant leak check, charge the proper amount of refrigerant intor refrigeration system.

CAUTION:

- **Never run the engine when charging the system throughthe high pressure side.**
- **Do not open the low pressure hand avalve when the system is being charged with liquid refrigerant.**

(a) Open the high pressure hand valve fully.

(b) Charge specified amopunt of refrigerant, then close the high pressure hand valve.

HINT:

A fully charged system is indicated by the sight flass veing free of any bubbles.

4. SET OFF MANIFOLD GAUGE SET

(a) Close both hand valves of manifold gauge set.

(b) Disconnect the quick disconnect adapters from the service valves.

5. INSTALL CAPS TO SERVICE VALVES ON REFRIGERANT LINES

AC076–02

EVACUATING

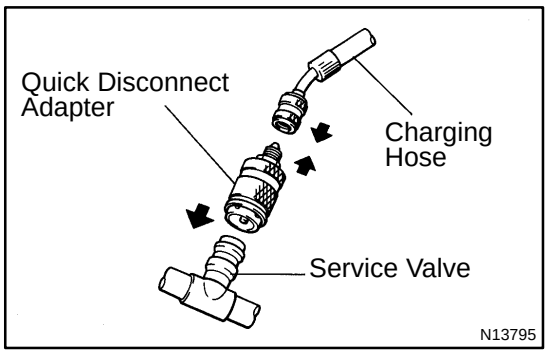

1. CONNECT QUICK DISCONNECT ADAPTER TO CHARGING HOSES

2. REMOVE CAPS FROM SERVICE VALVES ON REFRIGERANT LINES

3. SET ON MANIFOLD GAUGE SET

(a) Close both hand valves of manifold gauge set.

(b) Connect the quick disconnect adapters to the service valves.

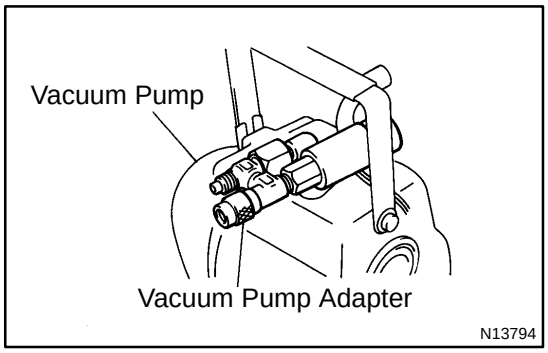

4. EVACUATE AIR FROM REFRIGERATION SYSTEM

(a) Connect the vacuum pump adapter to the vacuum pump.

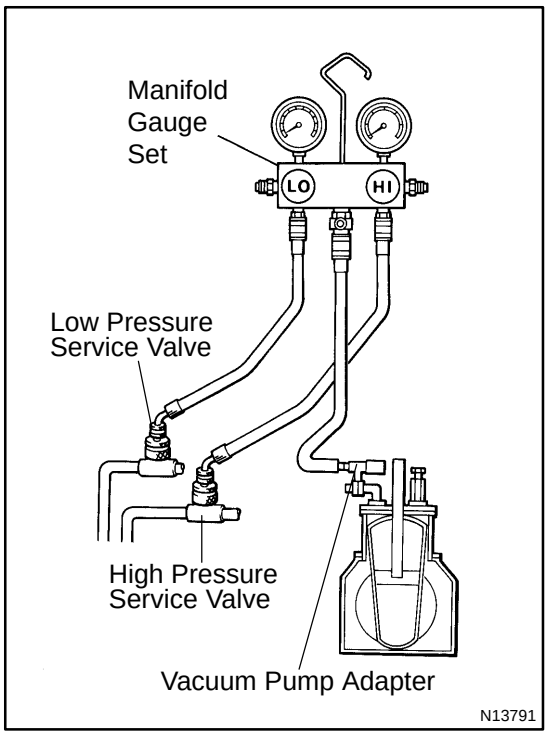

(b) Connect the center hose of the manifold gauge set to the vacuum pump adapter.

(c) Open both the high and low hand valves and run the vacuum pump.

(d) After 10 minutes or more, check that the low pressure gauge indicates 750 mmHg (30 in. Hg) or more.

HINT:

If the reading is 750 mmHg (30 in. Hg) or more, close both hand valves of manifold gauge set and stop the vacuum pump.

Check the system for leaks and repair if necessary.

(e) Close both the high and low hand valves and stop the vacuum pump.

(f) Leave the system in this condition for 5 minutes or more and check that there is no gauge indicator.

AC078–03

LOCATION

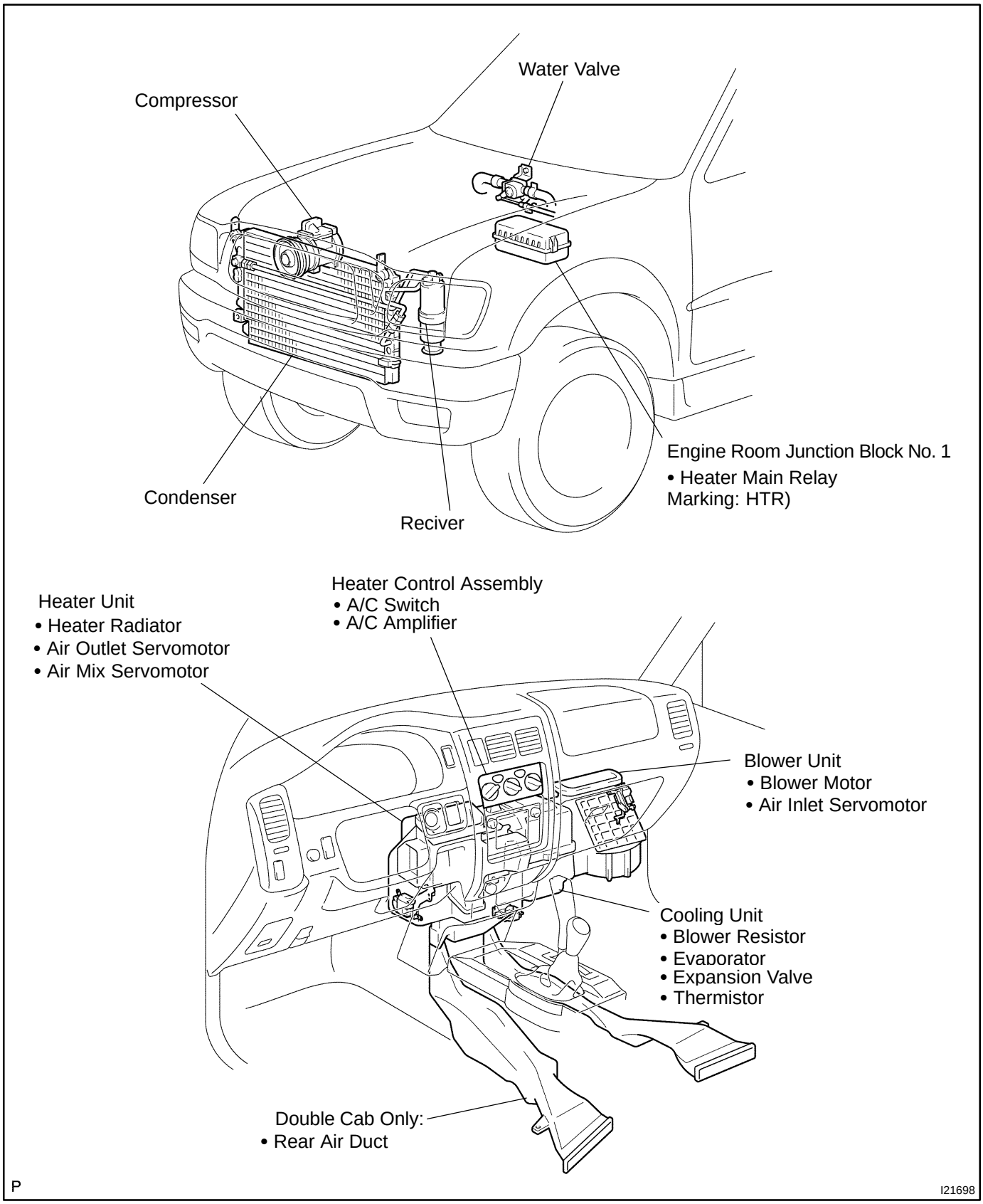

AC075–03

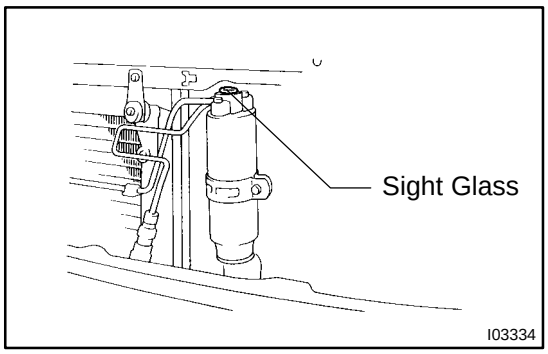

ON–VEHICLE INSPECTION

1. INSPECT REFRIGERANT VOLUME

Observe the sight glass on the liquid tube.

Test conditions:

- Running engine at 1,500 rpm
- Blower speed control switch at ”HI” position
- A/C switch ON
- Temperature control dial at ”COOL” position
- Fully open the doors

Item	Symptom	Amount of refrigerant	Remedy
1	Bubbles present in sight glass	Insufficient*	(1) Check for gas leakage with gas leak detector and repair if necessary (2) Add refrigerant until bubbles disappear
2	No bubbles present in sight glass	None, sufficient or too much	Refer item 3 and 4
3	No temperature difference between compressor inlet and outlet	Empty or nearly empty	(1) Check for gas leakage with gas leak detector and repair if necessary (2) Add refrigerant until bubbles disappear
4	Temperature between compressor inlet and outlet is noticeably different	Correct or too much	Refer to item 5 and 6
5	Immediately after air conditioning is turned off, refrigerant in sigh glass stays clear	Too much	(1) Discharge refrigerant (2) Evacuate air and charge proper amount of purified refrigerant
6	When air conditioning is turned off, refrigerant foams and then stays clear	Correct	–

*: Bubbles in the sight glass with ambient temperatures higher than usual can be considered normal if cooling is sufficient.

2. INSPECT REFRIGERANT PRESSURE WITH MANIFOLD GAUGE SET

This is a method in which the trouble is located by using a manifold gauge set. Read the manifold gauge pressure when these conditions are established.

Test conditions:

- Temperature at the air inlet with the switch set at RECURC is 30 – 35 °C (86 – 95 °F)
- Engine running at 1500 rpm
- Blower speed control switch at "HI" position
- Temperature control dial on "COOL" position

HINT:

It should be noted that the gauge indications may vary slightly due to ambient temperature conditions.

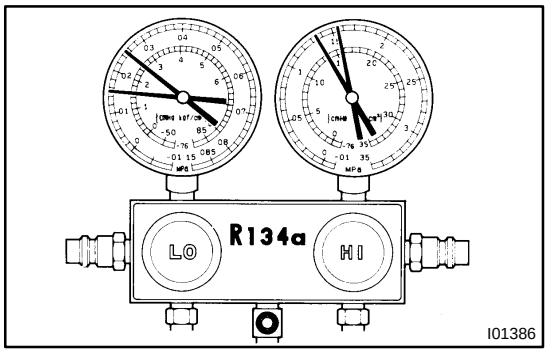

(1) Normally functioning refrigeration system.

Gauge reading:

Low pressure side:

0.15 – 0.25 MPa (1.5 – 2.5 kgf/cm^2)

High pressure side:

1.37 – 1.57 MPa (14 – 16 kgf/cm^2)

(2) Moisture present in refrigeration system.

Condition : Periodically cools and then fails to cool

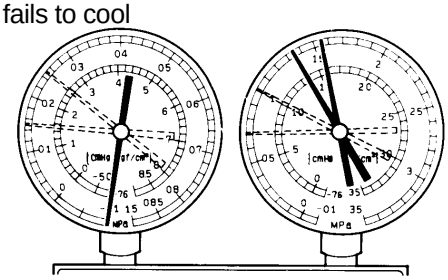

Symptom seen in refrigeration system	Probable cause	Diagnosis	Remedy
During operation, pressure on low pressure side sometimes become a vacuum and sometime normal	Moisture entered in refrigeration system freezes at expansion valve orifice and temporarily stops cycle, but normal state is restored after a time when the ice melts	• Drier in oversaturated state • Moisture in refrigeration system freezes at expansion valve orifice and blocks circulation of refrigerant	(1) Replace receiver (2) Remove moisture in cycle through repeatedly evacuating air (3) Charge proper amount of new refrigerant

(3) Insufficient cooling

Condition: Insufficient cooling

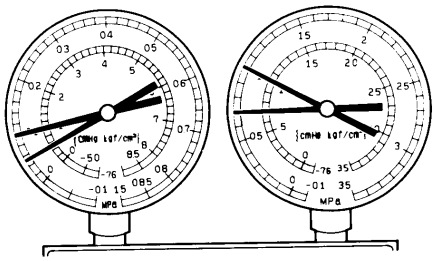

I01388

Symptom seen in refrigeration system	Probable cause	Diagnosis	Remedy
• Pressure low on both low and high pressure sides • Bubbles seen in sight glass continuously • Insufficient cooling performance	Gas leakage at some place in refrigeration system	• Insufficient refrigerant in system • Refrigerant leaking	(1) Check for gas leakage with gas leak detector and repair if necessary (2) Charge Proper amount of refrigerant (3) If indicated pressure value is near 0 when connected to gauge, create the vacuum after inspecting and repairing the location of the leak

(4) Poor circulation of refrigerant

Condition: Insufficient cooling

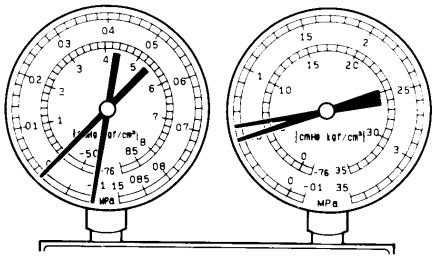

I01389

Symptom seen in refrigeration system	Probable cause	Diagnosis	Remedy
• Pressure low in both low and high pressure sides • Frost on tube from receiver to unit	Refrigerant flow obstructed by dirt in receiver	Receiver clogged	Replace receiver

(5) Refrigerant does not circulate

Condition: Does not cool (Cools from time to time in some cases)

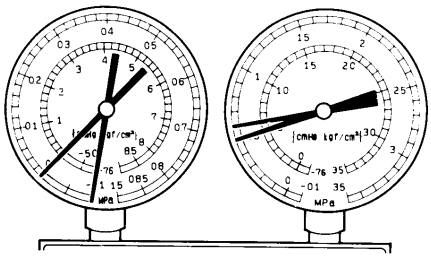

I01449

Symptom seen in refrigeration system	Probable cause	Diagnosis	Remedy
• Vacuum indicated on low pressure side, very low pressure indicated on high pressure side • Frost or dew seen on piping before and after receiver/ drier or expansion valve	• Refrigerant flow obstructed by moisture or dirt in refrigeration system • Refrigerant flow obstructed by gas leakage from expansion valve	Refrigerant does not circulate	(1) Check expansion valve (2) Clean out dirt in expansion valve by blowing with air (3) Replace receiver (4) Evacuate air and charge new refrigerant to proper amount (5) For gas leakage from expansion valve, replace expansion valve

(6) Refrigerant overcharged or insufficient cooling of condenser

Condition: Insufficient cooling

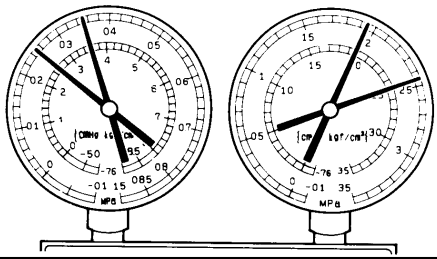

I01390

Symptom seen in refrigeration system	Probable cause	Diagnosis	Remedy
• Pressure too high on both low and high pressure sides • No air bubbles seen through the sight glass even when the engine rpm is lowered	• Unable to develop sufficient performance due to excessive refrigerant in system • Insufficient cooling of condenser	•Excessive refrigerant in cycle → refrigerant overcharged • Condenser cooling insufficient → condenser fins clogged of cooling fan faulty	(1) Clean condenser (2) Check cooling fan with fluid coupling operation (3) If (1) and (2) are in normal state, check amount of refrigerant Charge proper amount of refrigerant

(7) Air present in refrigeration system

Condition: Insufficient cooling

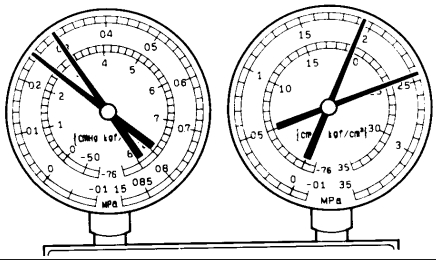

NOTE : These gauge indications are shown when the refrigeration system has been opened and the refrigerant charged without vacuum purging.

I01392

Symptom seen in refrigeration system	Probable cause	Diagnosis	Remedy
• Pressure too high on both low and high pressure sides • The low pressure piping hot to the touch • Bubbles seen in sight glass	Air entered in refrigeration system	• AIr present in refrigeration system • Insufficient vacuum purging	(1) Check compressor oil to see if it is dirty or insufficient (2) Evacuate air and charge new refrigerant

(8) Expansion valve improperly

Condition: Insufficient cooling

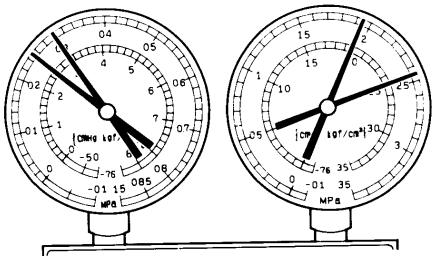

I01450

Symptom seen in refrigeration system	Probable cause	Diagnosis	Remedy
• Pressure too high on both low and high pressure sides • Frost or large amount of dew on piping on low pressure side	Trouble in expansion valve	• Excessive refrigerant in low pressure piping • Expansion valve opened too wide	Check expansion valve Replace if defective

(9) Defective compression compressor

Condition : Does not cool

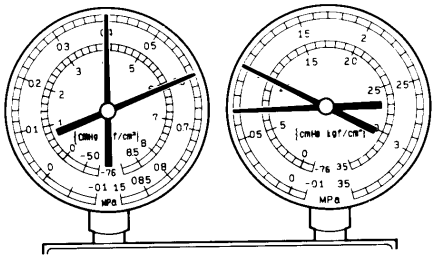

I01393

Symptom seen in refrigeration system	Probable cause	Diagnosis	Remedy
• Pressure too high on low and high pressure sides • Pressure too low on high pressure side	Internal leak in compressor	• Compression defective • Valve leaking or broken sliding parts	Repair or replace compressor

3. INSPECT IDLE–UP SPEED

(a) Warm up engine.

(b) Inspect idle–up speed when the these conditions are established.

- Warm up engine
- Blower speed control switch at ”HI” position
- A/C switch ON
- Temperature control dial at ”COOL” position

Magnetic clutch condition	Idle–up speed
2RZ–FE and 3RZ–FE Engine	–
Magnetic clutch not engaged	700 ± 50 rpm
Magnetic clutch engaged	900 ± 50 rpm
5VZ–FE Engine	–
Magnetic clutch not engaged	700 ± 50 rpm
Magnetic clutch engaged	850 ± 50 rpm

If idle speed is not as specified, check IAC valve and air intake system.

4. INSPECT FOR LEAKAGE OF REFRIGERANT

(a) Perform in these conditions:

- Stop engine.
- Secure good ventilation (If the gas leak detector may not react to volatile gases which are not refrigerant, such as evaporated gasoline and exhaust gas.)
- Repeat the test 2 or 3 times.
- Make sure that there is some refrigerant remaining in the refrigeration system.
  When compressor is OFF: approx. 392 – 588 kPa (4 – 6 kgf/ cm^2, 57 – 85 psi)

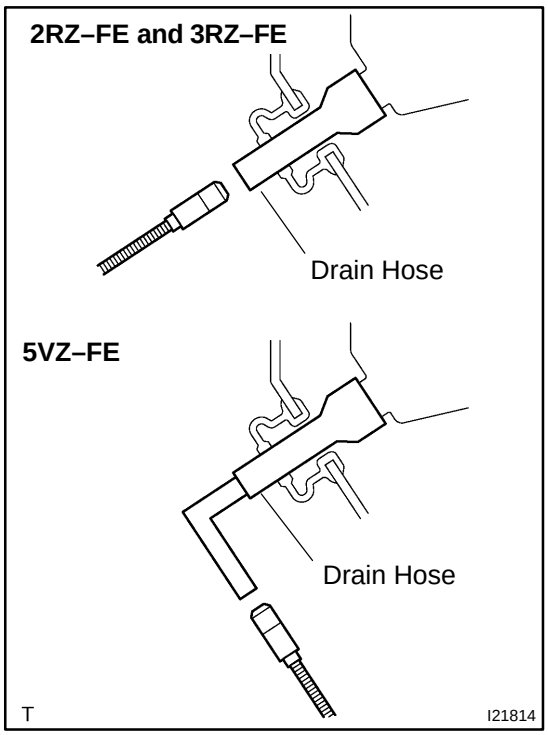

(b) Bring the gas leak detector close to the drain hose before performing the test.

HINT:

- After the blower motor has stopped, leave the cooling unit for more than 15 minutes.
- Expose the gas leak detector sensor under the drain hose.
- When bring the gas leak detector close to the drain hose, make sure that the gas leak detector does not react to the volatile gases.

If such reaction is unavoidable, the vehicle must be lifted up.

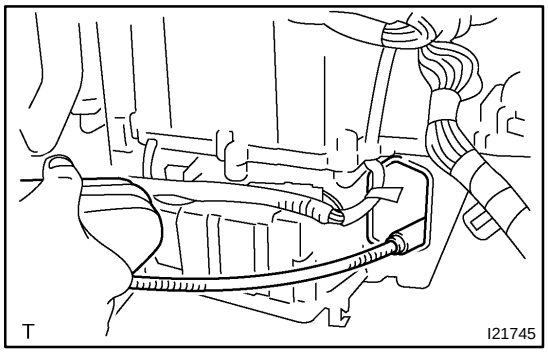

(c) If gas leak is not detected on the drain hose, remove the blower resistor from the cooling unit. Then insert the gas leak detector sensor into the unit and perform the test.

(d) Disconnect the connector and leave the pressure switch for approx. 20 minutes. Then bring the gas leak detector close to the pressure switch and perform the test.

(e) Bring the gas leak detector close to the refrigerant lines and perform the test.

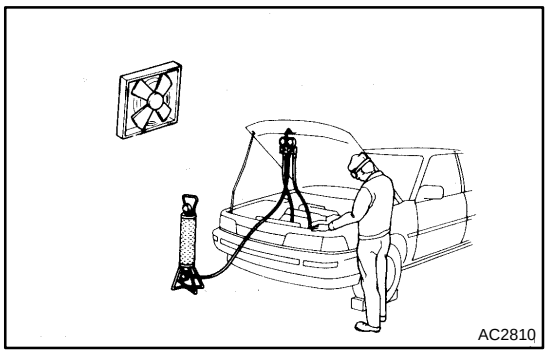
AC2810

AIR CONDITIONING SYSTEM

AC073–03

PRECAUTION

1. DO NOT HANDLE REFRIGERANT IN AN ENCLOSED AREA OR WEAR EYE PROTECTION

2. ALWAYS WEAR EYE PROTECTION

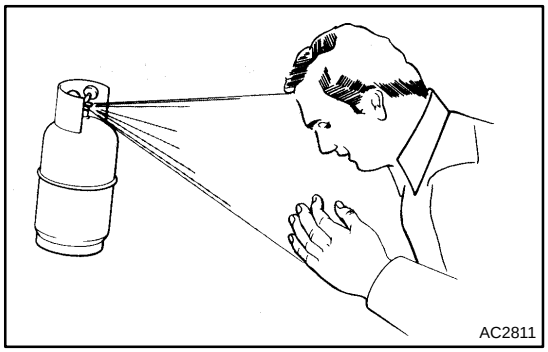
AC2811

3. BE CAREFUL NOT TO GET LIQUID REFRIGERANT IN YOUR EYES OR ON YOUR SKIN

If liquid refrigerant gets in your eyes or on your skin.

(a) Wash the area with lots of cool water.

CAUTION:

Do not rub your eyes or skin.

(b) Apply clean petroleum jelly to the skin.

(c) Go immediately to a physician or hospital for professional treatment.

4. NEVER HEAT CONTAINER OR EXPOSE IT TO NAKED FLAME

5. BE CAREFUL NOT TO DROP CONTAINER AND NOT TO APPLY PHYSICAL SHOCKS TO IT

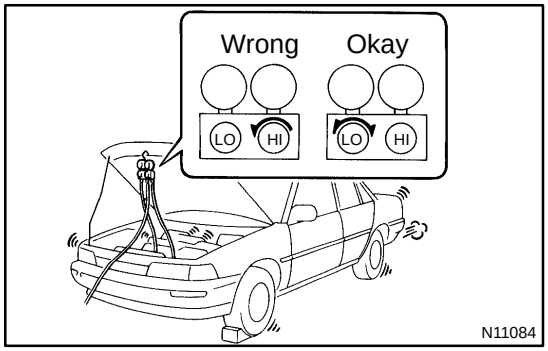

N11084

6. DO NOT OPERATE COMPRESSOR WITHOUT ENOUGH REFRIGERANT IN REFRIGERATION SYSTEM

If there is not enough refrigerant in the refrigerant system oil lubrication will be insufficient and compressor burnout may occur, so that care to avoid this, necessary care should be taken.

7. DO NOT OPEN PRESSURE MANIFOLD VALVE WHILE COMPRESSOR IS OPERATE

If the high pressure valve is opened, refrigerant flows in the reverse direction and could cause the charging cylinder to rupture, so open and close the only low pressure valve.

8. BE CAREFUL NOT TO OVERCHARGE SYSTEM WITH REFRIGERANT

If refrigerant is overcharged, it causes problems such as insufficient cooling, poor fuel economy, engine overheating etc.

9. SUPPLEMENTAL RESTRAINT SYSTEM (SRS)

The TOYOTA TACOMA is equipped with an SRS (Supplemental Restraint System) such as the driver airbag and passenger airbag. Failure to carry out service operations the correct sequence could cause the SRS to unexpectedly deployed during servicing, possible the SRS may fail to operate when required. Before servicing (including removal or installation of parts, inspection or replacement), be sure to read the following item carefully, then follow the correct procedure described in the repair manual.

AIR INLET SERVOMOTOR

AC3FF–01

INSPECTION

1. **REMOVE GLOVE COMPARTMENT PARTS (See page BO–52)**
2. **REMOVE AIR DUCT**

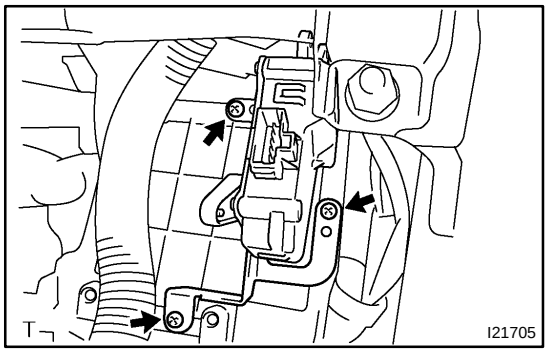

3. **REMOVE AIR INLET SERVOMOTOR**

(a) Disconnect the servomotor connector.

(b) Remove the 3 screws and servomotor.

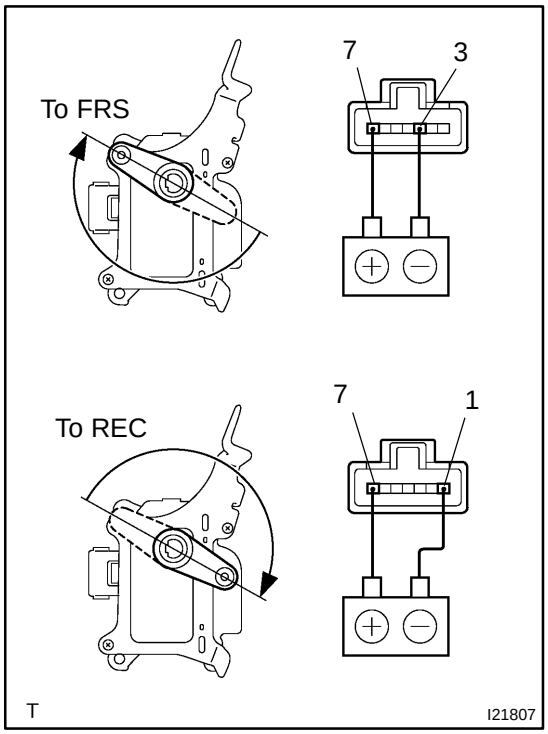

4. **INSPECT AIR INLET SERVOMOTOR**

Inspect servomotor operation.

(1) Connect the positive (+) lead from the battery to terminal 7 and negative (–) lead to terminal 3, then check that the arm turns to "FRS" side smoothly.

(2) Connect the positive (+) lead from the battery to terminal 7 and negative (–) lead to terminal 1, then check that the arm turns to "REC" side smoothly.

If operations are not as specified, replace the servomotor.

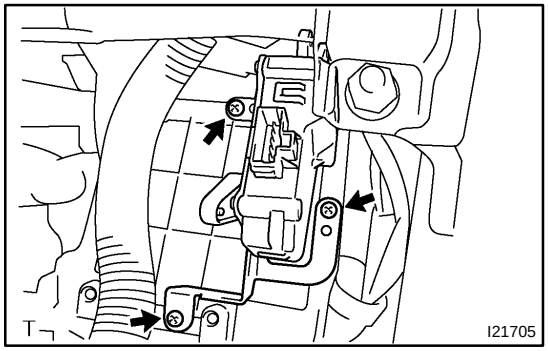

5. **INSTALL AIR INLET SERVOMOTOR**

(a) Install the servomotor with the 3 screws.

(b) Connect the servomotor connector.

6. **INSTALL AIR DUCT**
7. **INSTALL GLOVE COMPARTMENT PARTS (See page BO–55)**

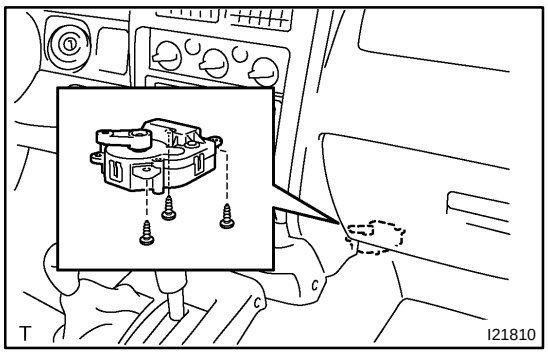

AIR MIX SERVOMOTOR

AC3FG–01

INSPECTION

1. REMOVE AIR MIX SERVOMOTOR

(a) Disconnect the servomotor connector.

(b) Remove the 3 screws and servomotor.

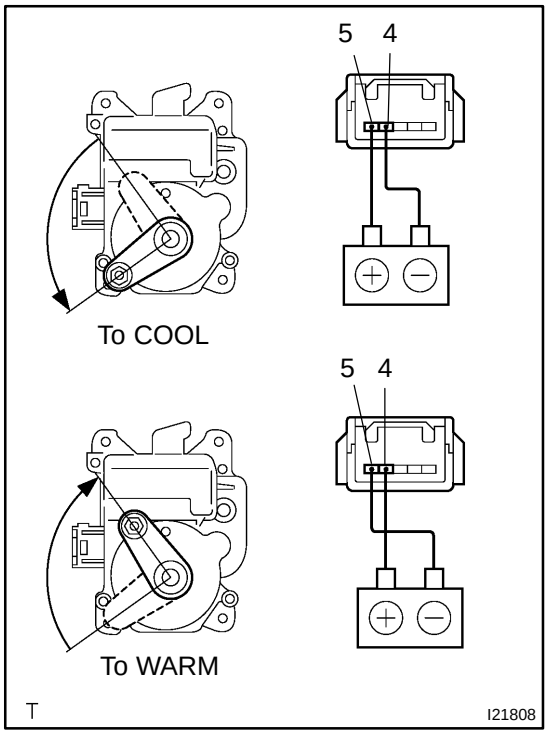

2. INSPECT AIR MIX SERVOMOTOR

(a) Inspect servomotor operation.

(1) Connect the positive (+) lead from the battery to terminal 5 and negative (–) lead to terminal 4, then check that the arm turns to "COOL" side smoothly.

(2) Connect the positive (+) lead from the battery to terminal 4 and negative (–) lead to terminal 5, then check that the arm turns to "WARM" side smoothly.

If operations are not as specified, replace the servomotor.

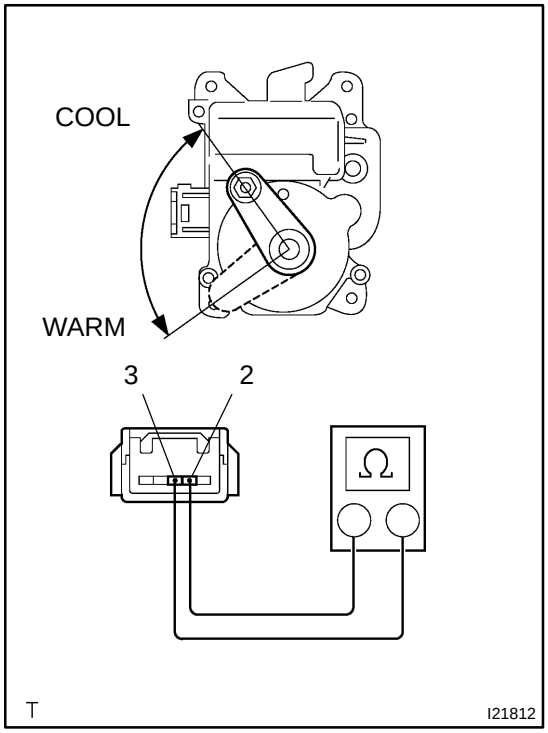

(b) Inspect position sensor resistance.

(1) Place the servomotor arm in the "WARM" position and measure the resistance between terminals 2 and 3.

Please refer to the chart below for specification.

(2) Place the servomotor arm in the "COOL" position and measure the resistance between terminals 2 and 3.

Please refer to the chart below for specification.

Tester connection	Condition	Specified condition
2 – 3	Arm position at "WARM"	0.8 – 1.6 kΩ
2 – 3	Arm position at "COOL"	3.4 – 6.2 kΩ

If resistance is not as specified, replace the servomotor.

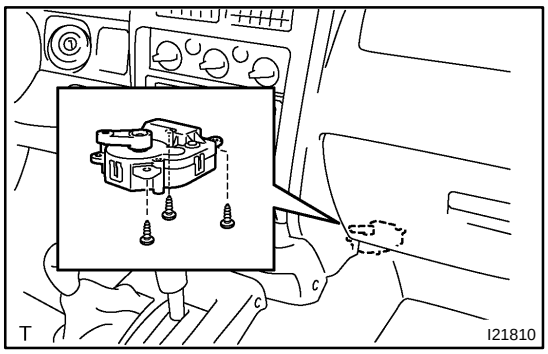

3. INSTALL AIR MIX SERVOMOTOR

(a) Install the 3 screws and servomotor.

(b) Connect the servomotor connector.

AIR OUTLET SERVOMOTOR

AC3FH–01

INSPECTION

1. REMOVE LOWER LH FINISH PANEL (See page BO–52)

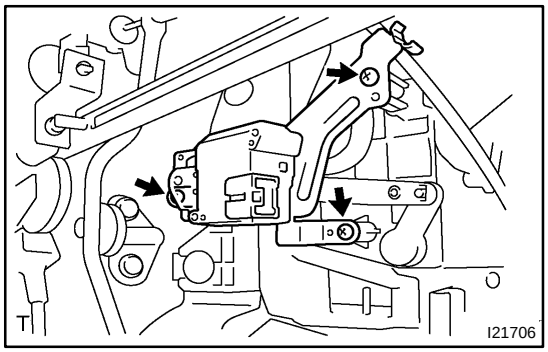

2. REMOVE AIR OUTLET SERVOMOTOR

(a) Disconnect the servomotor connector.

(b) Remove the 3 screws and servomotor.

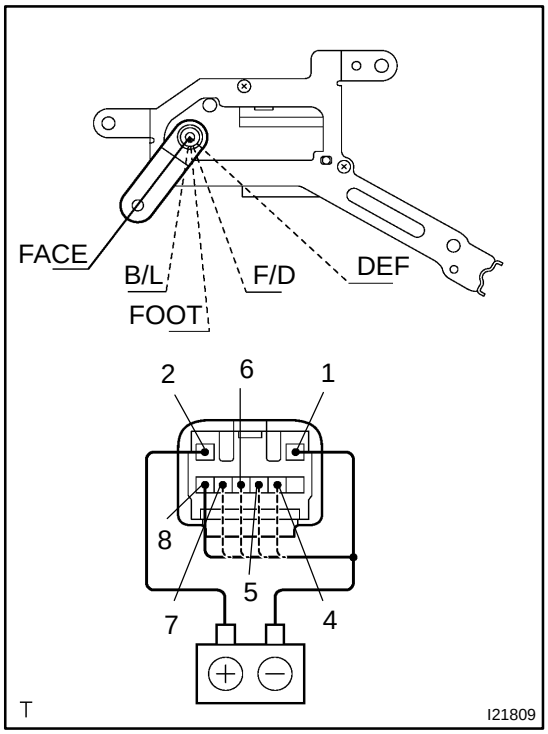

3. INSPECT AIR OUTLET SERVOMOTOR

Inspect servomotor operation.

(1) Connect the positive (+) lead from the battery to terminal 2 and negative (–) lead to terminal 1.

(2) Check the lever operation when the negative (–) lead is connected to the terminals shown below.

HINT:

The lever moves smoothly to the position for each mode.

Ground Terminals	mode
8	DEF.
7	FOOT/DEF
6	FOOT
5	B/L
4	FACE

If operations are not as specified, replace the servomotor.

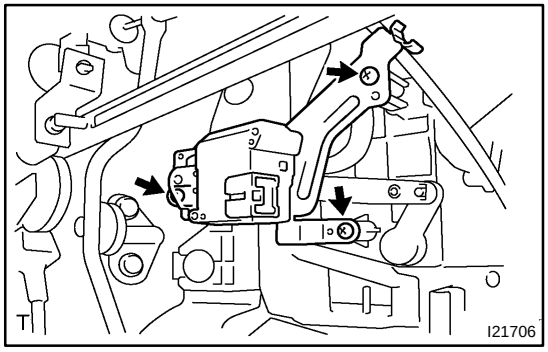

4. INSTALL AIR OUTLET SERVOMOTOR

(a) Install the servomotor with the 3 screws.

(b) Connect the servomotor connector.

5. INSTALL LOWER LH FINISH PANEL (See page BO–55)

BLOWER MOTOR

AC3FD–01

INSPECTION

1. **REMOVE GLOVE COMPARTMENT PARTS (See page BO–52)**

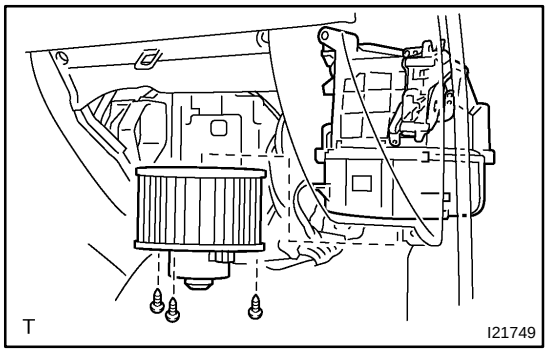

2. **REMOVE BLOWER MOTOR**

(a) Disconnect the motor connector from the blower motor.

(b) Remove the 3 screws and motor.

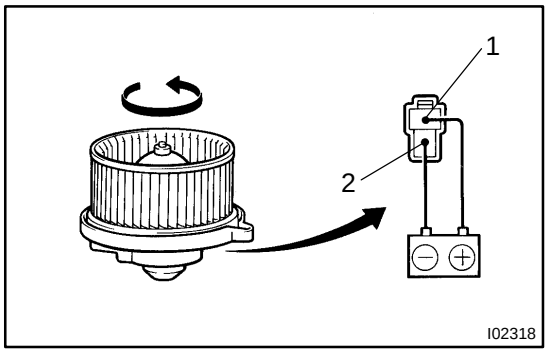

3. **INSPECT BLOWER MOTOR OPERATION**

Connect the positive (+) lead from the battery to terminal 1 and the negative (–) lead to terminal 2, then check that the motor operations smoothly.

If operation is not as specified, replace the blower motor.

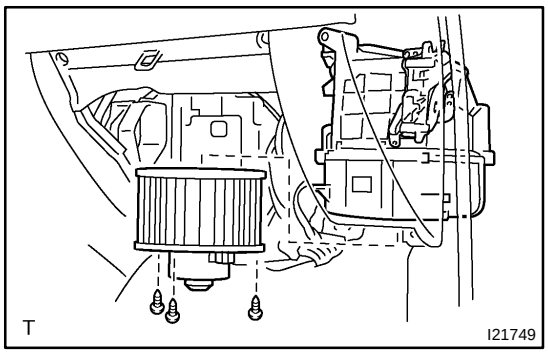

4. **INSTALL BLOWER MOTOR**

(a) Install the motor with the 3 screws.

(b) Connect the motor connector to the blower motor.

5. **INSTALL GLOVE COMPARTMENT PARTS (See page BO–52)**

BLOWER RESISTOR

AC3FE–01

INSPECTION

1. **REMOVE GLOVE COMPARTMENT PARTS (See page BO–52)**

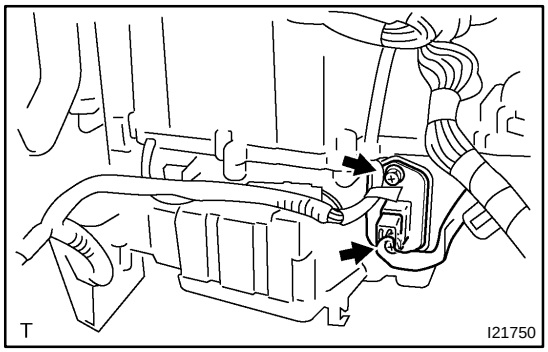

2. **REMOVE BLOWER RESISTOR**

(a) Disconnect the resister connector from the blower resistor.

(b) Remove the 2 screws and blower resistor.

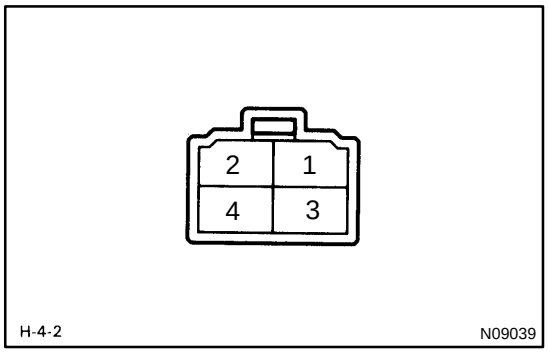

3. **INSPECT BLOWER RESISTOR RESISTANCE**

Tester connection	Condition	Specified condition
1–4	Constant	2.2 ± 0.1 Ω
1–3	Constant	1.2 ± 0.2 Ω
1–2	Constant	1.8 ± 0.2 Ω

If resistance is not as specified, replace the blower resistor.

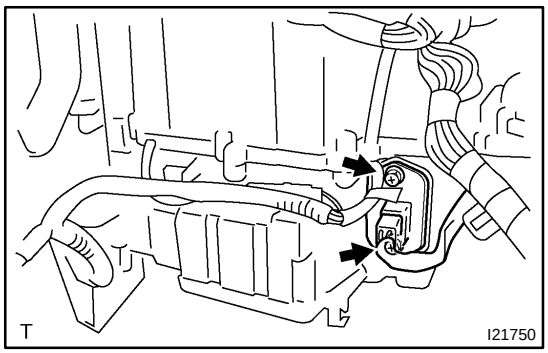

4. **INSTALL BLOWER RESISTOR**

(a) Install the blower resistor with the 2 screws.

(b) Connect the resister connector to the blower resistor.

5. **INSTALL GLOVE COMPARTMENT PARTS (See page BO–52)**

BLOWER UNIT

COMPONENTS

AC07R–02

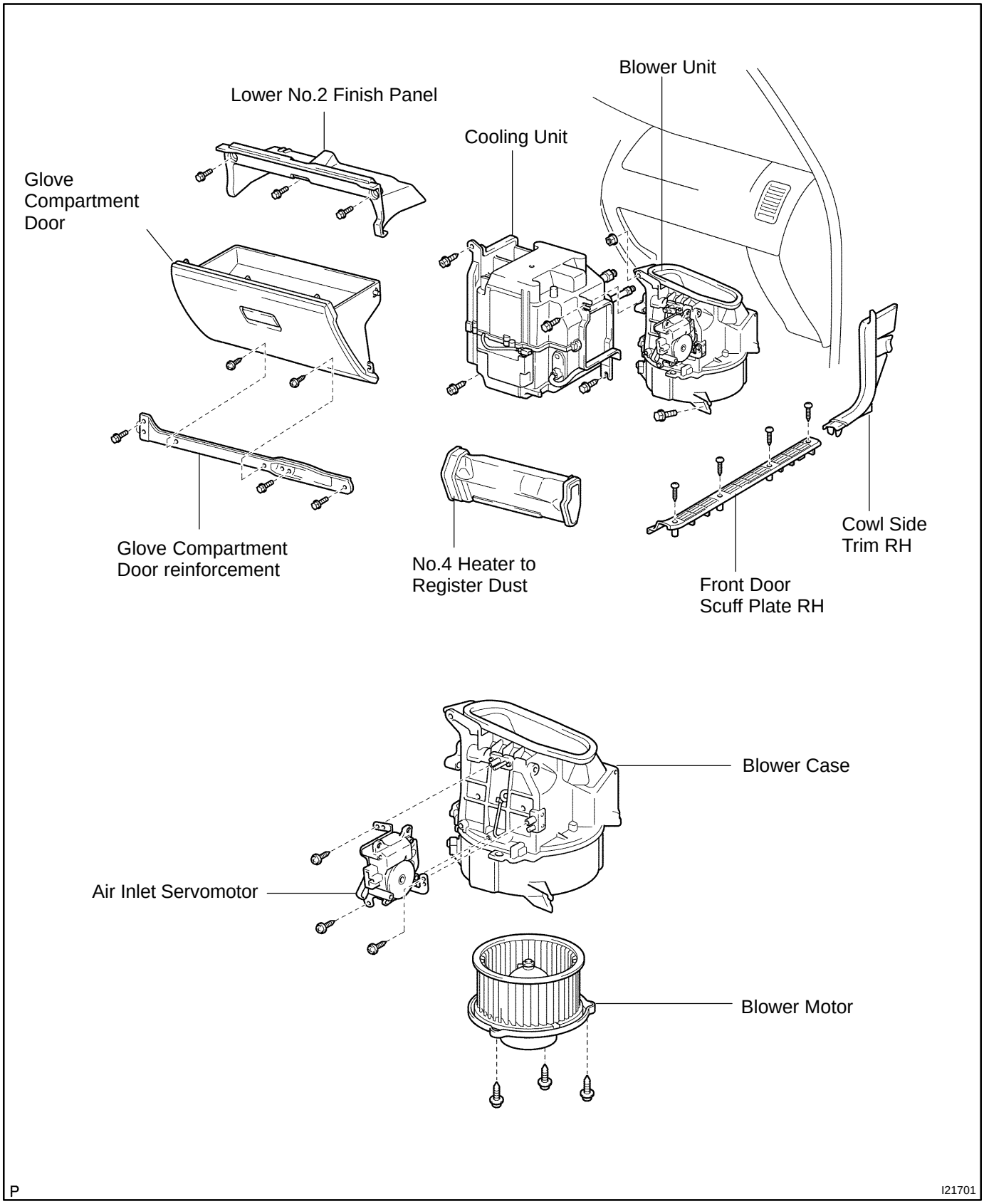

AC3FC–01

DISASSEMBLY

1. REMOVE BLOWER MOTOR (See page AC–71)
2. REMOVE AIR INLET SERVOMOTOR (See page AC–40)

AC07V–01

INSTALLATION

Installation is in the reverse order of removal (See page AC–39).

AC07U–01

REASSEMBLY

Reassembly is in the reverse order of disassembly (See page AC–40).

AC07S–03

REMOVAL

1. **REMOVE FRONT DOOR SCUFF PLATE RH**
2. **REMOVE COWL SIDE TRIM RH**
3. **REMOVE COOLING UNIT (See page AC–26)**

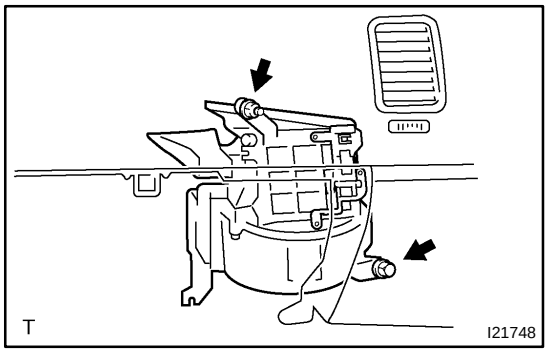

4. **REMOVE BLOWER UNIT**

(a) Disconnect the connector from the blower motor.

(b) Disconnect the servomotor connector from the air inlet servomotor.

(c) Remove the nut, bolt and blower unit.

AC3FQ–01

COMPONENTS

2RZ–FE and 3RZ–FE Engine Models:

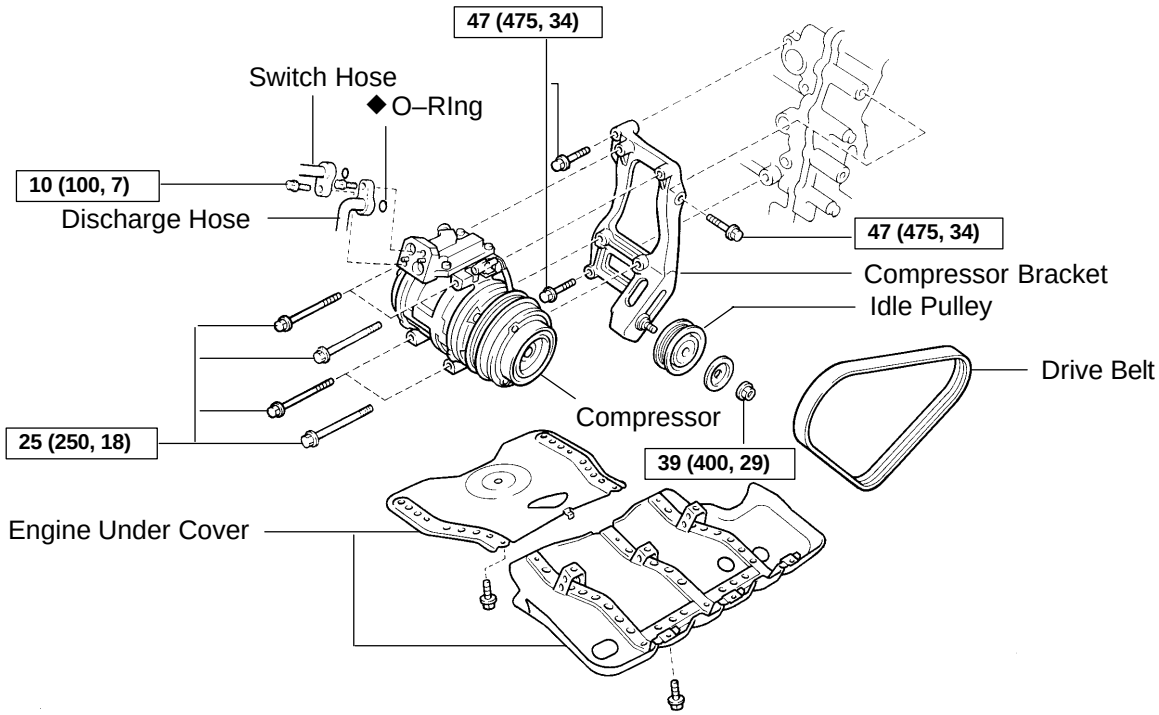

5VZ–FE Engine Models:

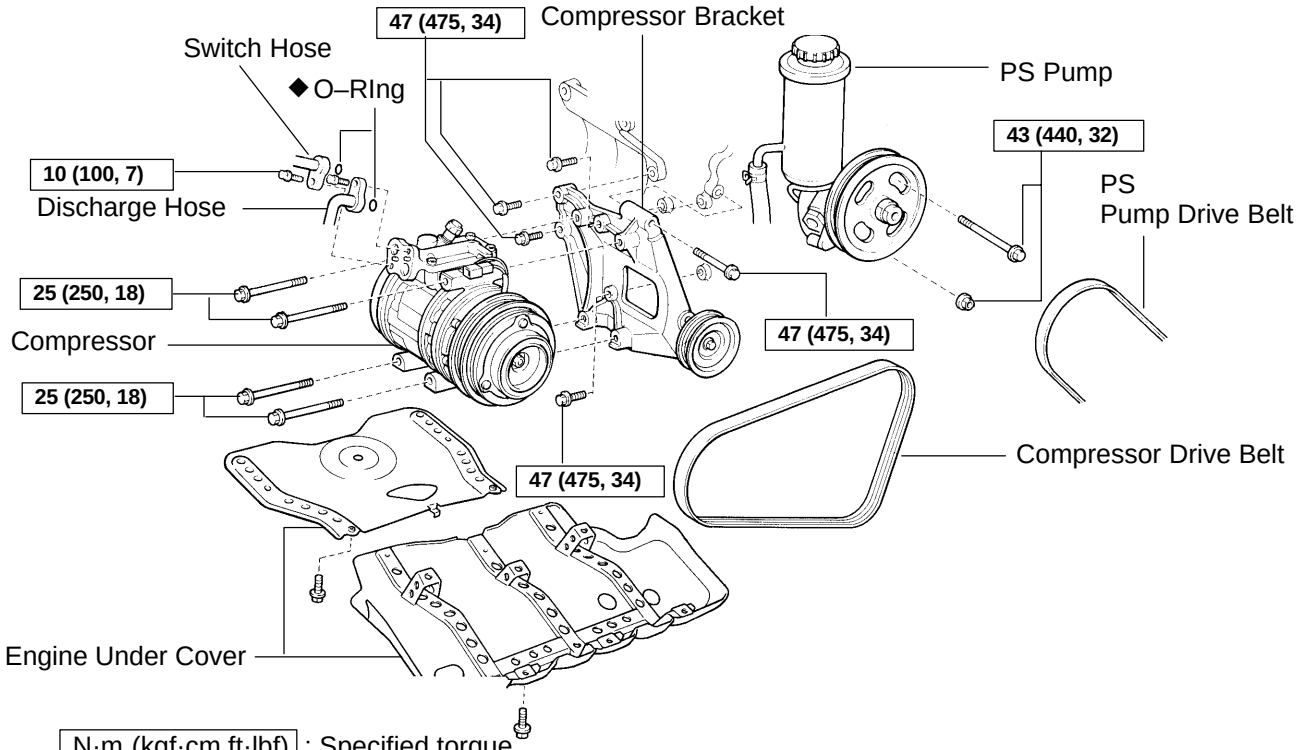

N·m (kgf·cm,ft·lbf) : Specified torque

N17876
N17875 ◆ Non–reusable part

I22565

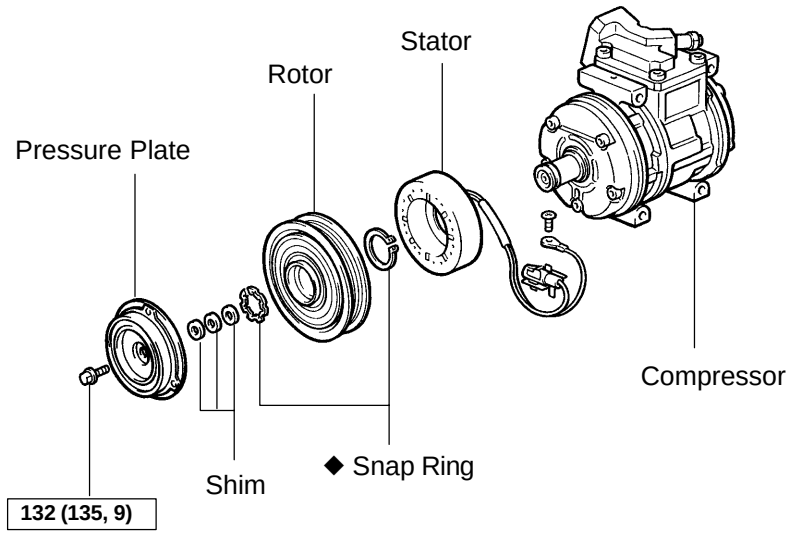

N·m (kgf·cm,ft·lbf) : Specified torque

N12543 ◆ Non–reusable part

I22566

AC07Z–03

DISASSEMBLY

1. REMOVE PRESSURE PLATE

(a) Using SST and a socket wrench, remove the shaft bolt.
Torque: 13.2 N·m (135 kgf·cm, 9 ft·lbf)

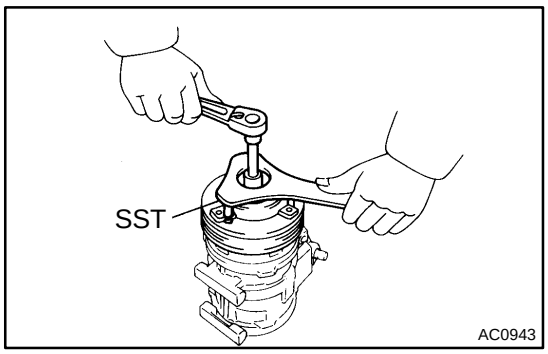

(b) Install SST on the pressure palate.
SST 07112–66040

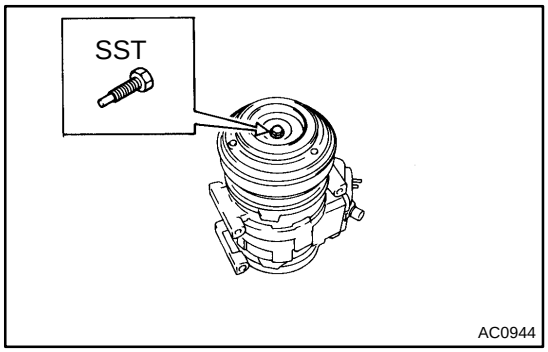

(c) Using SST and socket wrench, remove the pressure plate.
SST 07112–76060

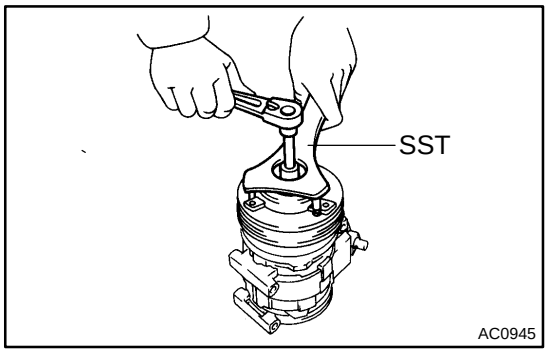

(d) Remove the shims from the pressure palate.

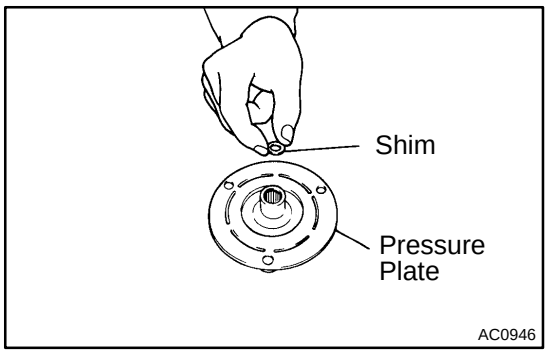

2. REMOVE ROTOR

(a) Using SST, remove the snap ring.
SST 95994–10020

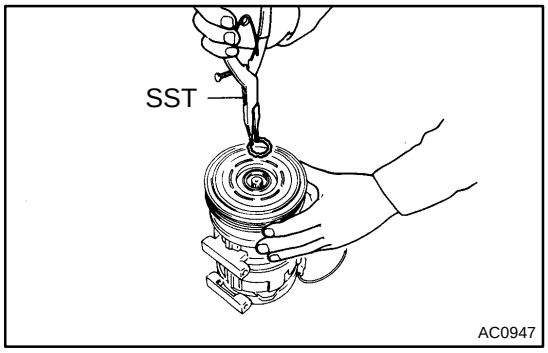

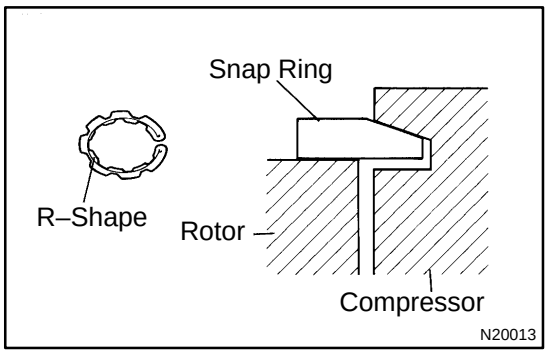

NOTICE:
At the time of reassembly, please refer to the following item.
The snap ring should be installed so that beveled side faces up.

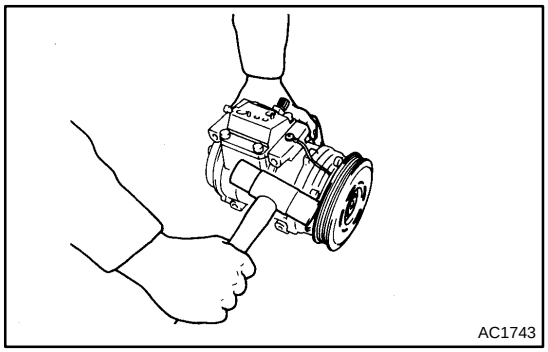

(b) Using a plastic hammer, tap the rotor off the shaft.

NOTICE:
Be careful not to damage the pulley when tapping on the rotor.

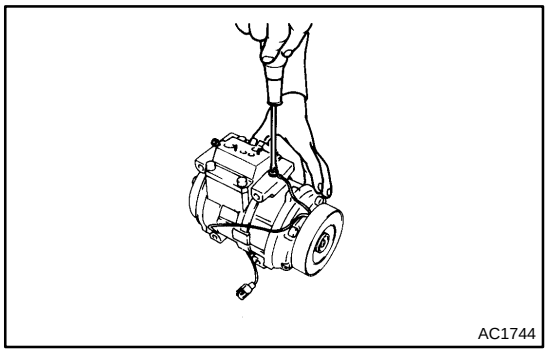

3. REMOVE STATOR

(a) Disconnect the stator lead wire from the compressor housing.

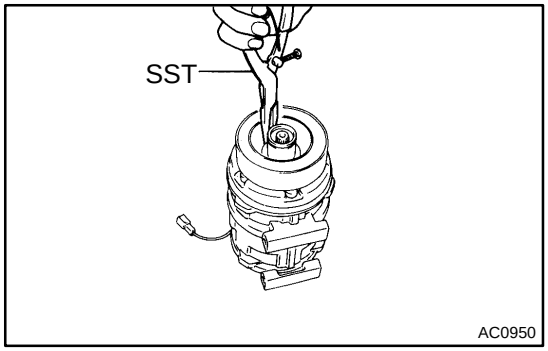

(b) Using SST, remove the snap ring.
SST 95994–10020

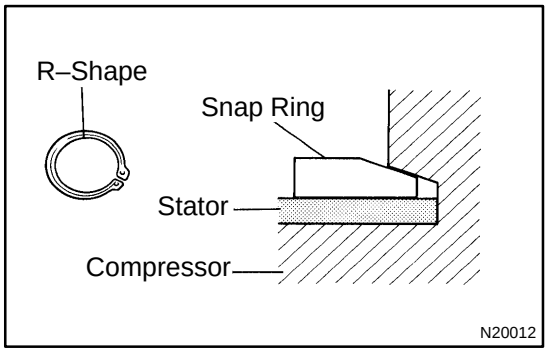

NOTICE:
At the time of reassembly, please refer to the following item.
The snap ring should be installed so that its beveled side faces up.

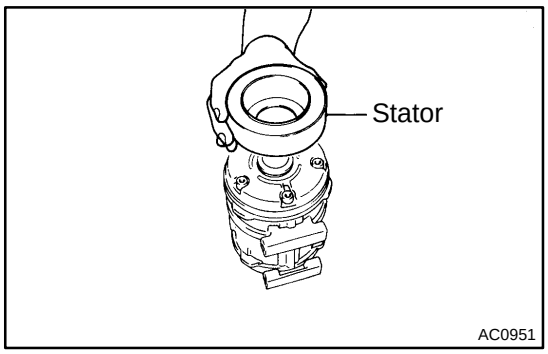

(c) Remove the stator.

AC081–01

INSTALLATION

1. INSTALL COMPRESSOR BRACKET

(a) 2RZ–FE, 3RZ–FE Engine:
Install the bracket with 4 bolts.
Torque: 47 N·m (475 kgf·cm, 34 ft·lbf)

(b) 5VZ–FE Engine:
Install the bracket with 5 bolts.
Torque: 47 N·m (475 kgf·cm, 34 ft·lbf)

2. INSTALL COMPRESSOR

(a) Install the compressor with 4 bolts.
Torque: 25 N·m (250 kgf·cm, 18 ft·lbf)

(b) Connect the connector.

3. CONNECT DISCHARGE AND SUCTION HOSES

Connect the both hoses with the 2 bolts.
Torque: 10 N·m (100 kgf·cm, 7 ft·lbf)

NOTICE:

Hose should be connected immediately after the caps have been removed.

HINT:

Lubricate 2 new O–rings with compressor oil and install the hoses.

4. INSTALL AND CHECK DRIVE BELT (See page AC–18)

5. INSTALL ENGINE UNDER COVER

6. 5VZ– FE Engine Models:
INSTALL PS PUMP SET BOLT AND NUT
Torque: 43 N·m (440 kgf·cm, 32 ft·lbf)

7. CONNECT NEGATIVE (–) TERMINAL CABLE TO BATTERY

8. EVACUATE AIR FROM REFRIGERATION SYSTEM

9. CHARGE SYSTEM WITH REFRIGERANT
Specified amount: 600 ± 50 g (21.16 ± 1.76 oz.)

10. INSPECT FOR LEAKAGE OF REFRIGERANT

Using a gas leak detector, check for leakage of refrigerant.
If there is leakage, check the tightening torque at the joints.

11. INSPECT A/C OPERATION

COMPRESSOR AND MAGNETIC CLUTCH

AC07W–01

ON–VEHICLE INSPECTION

1. SET ON MANIFOLD GAUGE SET (See page AC–19)

2. START ENGINE

3. CHECK METALLIC SOUND OF COMPRESSOR

Check if there is an abnormal metallic sound from the compressor when the A/C switch is on.

If abnormal metallic sound is heard, replace the compressor assembly.

4. CHECK REFRIGERANT PRESSURE (See page AC–3)

5. STOP ENGINE

6. CHECK REFRIGERANT LEAK OF SAFETY SEAL

Using a gas leak detector, check for leakage of refrigerant.

If there is any leakage, replace the compressor assembly.

7. SET OFF MANIFOLD GAUGE SET (See page AC–20)

8. CHECK GREASE LEAK OF CLUTCH BEARING

9. CHECK SIGN OF OIL ON PRESSURE PLATE

If necessary, repair or replace.

10. CHECK NOISE OF MAGNETIC CLUTCH BEARING

(a) Start engine.

(b) Check for abnormal noise from near the compressor when the A/C switch is OFF.

If abnormal noise is being emitted, replace the magnetic clutch.

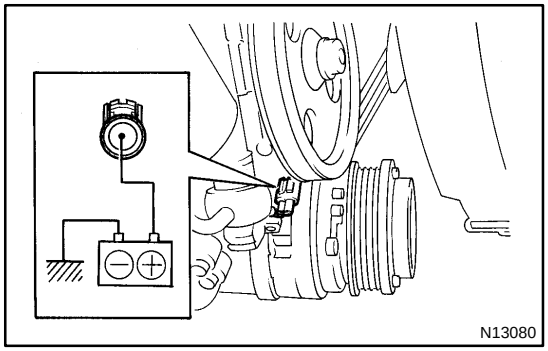

11. INSPECT MAGNETIC CLUTCH OPERATION

(a) Disconnect the connector.

(b) Connect the positive (+) lead from the battery to terminal on the magnetic clutch connector and the negative (–) lead to the body ground.

(c) Check that the magnetic clutch is energized.

If operation is not as specified, replace the magnetic clutch.

AC080–01

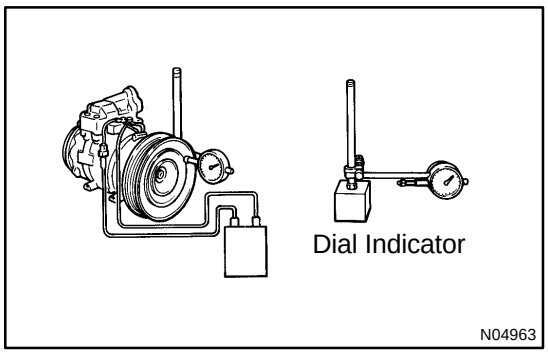

REASSEMBLY

Reassembly is in the reverse order of disassembly (See page AC–47).

AFTER REASSEMBLY, CHECK MAGNETIC CLUTCH CLEARANCE

(a) Set the dial indicator to the pressure plate of the magnetic clutch.

(b) Connect the magnetic clutch lead wire to the positive (+) terminal of the battery.

(c) Check the clearance between the pressure plate and rotor when connecting the negative (–) terminal to the battery.

Standard clearance:
0.5 ± 0.15 mm (0.020 ± 0.0059 in.)

If the clearance is not within the standard clearance, adjust the clearance using shims to obtain the standard clearance.

Shim thickness:
0.1 mm (0.004 in.)
0.3 mm (0.012 in.)
0.5 mm (0.020 in.)

AC07Y–01

REMOVAL

1. RUN ENGINE AT IDLE SPEED WITH A/C ON FOR APPROX. 10 MINUTES WITH A/C ON

2. STOP ENGINE

3. DISCONNECT NEGATIVE (–) TERMINAL CABLE FROM BATTERY

4. DISCHARGE REFRIGERANT FROM REFRIGERATION SYSTEM

5. REMOVE ENGINE UNDER COVER

6. DISCONNECT DISCHARGE AND SUCTION HOSES

Remove the 2 bolts and disconnect the both hoses.

NOTICE:

Cap the open fitting immediately to keep moisture or dirt out of the system.

7. REMOVE COMPRESSOR

(a) Remove the fan shroud.

(b) Loosen the drive belt.

(c) Remove the compressor mounting bolts and the compressor.

8. REMOVE COMPRESSOR BRACKET

(a) 2RZ–FE, 3RZ–FE Engine:
Remove the 4 bolts and compressor bracket.

(b) 5VZ–FE Engine:
Remove the 5 bolts and compressor bracket.

AC087–01

INSTALLATION

Installation is in the reverse order of removal (See page AC–56).

CONDENSER

AC085–01

ON–VEHICLE INSPECTION

1. INSPECT CONDENSER FINS FOR BLOCKAGE OR DAMAGE

If the fins are clogged, wash them with water and dry with compressed air.

NOTICE:

Be careful not to damage the fins.

If the fins are bent, straighten them with a screwdriver or pliers.

2. INSPECT CONDENSER AND FITTINGS FOR LEAKAGE

Using a gas leak detector, check for leakage of refrigerant.

If there is leakage, check the tightening torque at the joints.

AC086–01

REMOVAL

1. DISCHARGE REFRIGERANT FROM REFRIGERATION SYSTEM

HINT:

At the time of installation, please refer to the following item.

Evacuate air from refrigeration system.

Charge system with refrigerant and inspect for leakage of refrigerant.

Specified amount: 600 ± 50 g (21.16 ± 1.76 oz.)

2. REMOVE THESE PARTS:

(a) Radiator grille

(b) Horns

(c) Hood lock set bolts

(d) Center brace

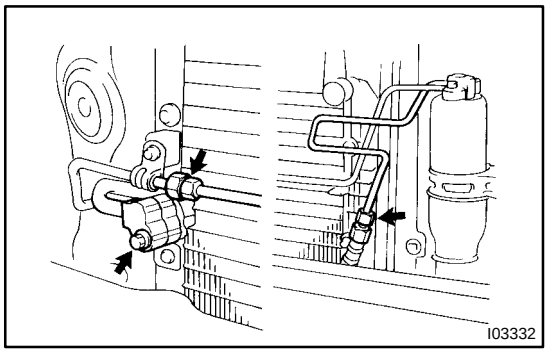

3. REMOVE 2 LIQUID TUBES

(a) Remove the 2 bolts and disconnect the liquid tubes from receiver.

Torque: 6.0 N·m (60 kgf·cm, 52 in.·lbf)

NOTICE:

Cap the open fittings immediately to keep moisture or dirt out of the system.

HINT:

At the time of installation, please refer to the following item.

Lubricate 2 new O–rings with compressor oil and install the tubes.

(b) Loosen the 2 nuts and remove the 2 liquid tubes.

Torque: 14 N·m (140 kgf·cm, 10 ft·lbf)

NOTICE:

Cap the open fittings immediately to keep moisture or dirt out of the system.

HINT:

At the time of installation, please refer to the following item.

Lubricate 2 new O–rings with compressor oil and install the tubes.

4. DISCONNECT DISCHARGE HOSE FROM CONDENSER

(a) Remove the piping clamp set bolt.

(b) Remove the bolt and disconnect the hose.

Torque: 10 N·m (100 kgf·cm, 7 ft·lbf)

NOTICE:

Cap the open fitting immediately to keep moisture or dirt out of the system.

HINT:

At the time of installation, please refer to the following item.

Lubricate a new O–rings with compressor oil and install the tubes.

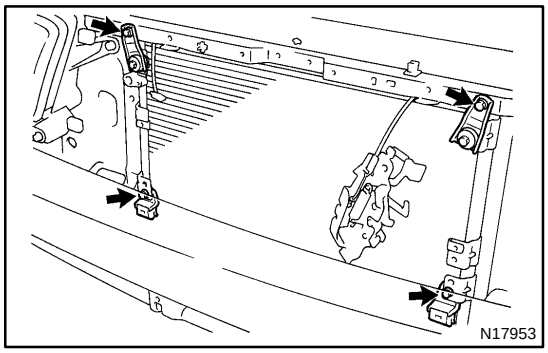

5. REMOVE CONDENSER

(a) Remove the liquid tube clamping bolt.

(b) Remove the 2 condenser mounting bolts and pull out the condenser.

HINT:

At the time of installation, please refer to the following item.

If condenser is replaced, add compressor oil to the condenser.

ADD 40 – 50 cc (1.4 – 1.7 fl.oz.)

Compressor oil: ND–OIL 8 or equivalent

AC0CF–05

COMPONENTS

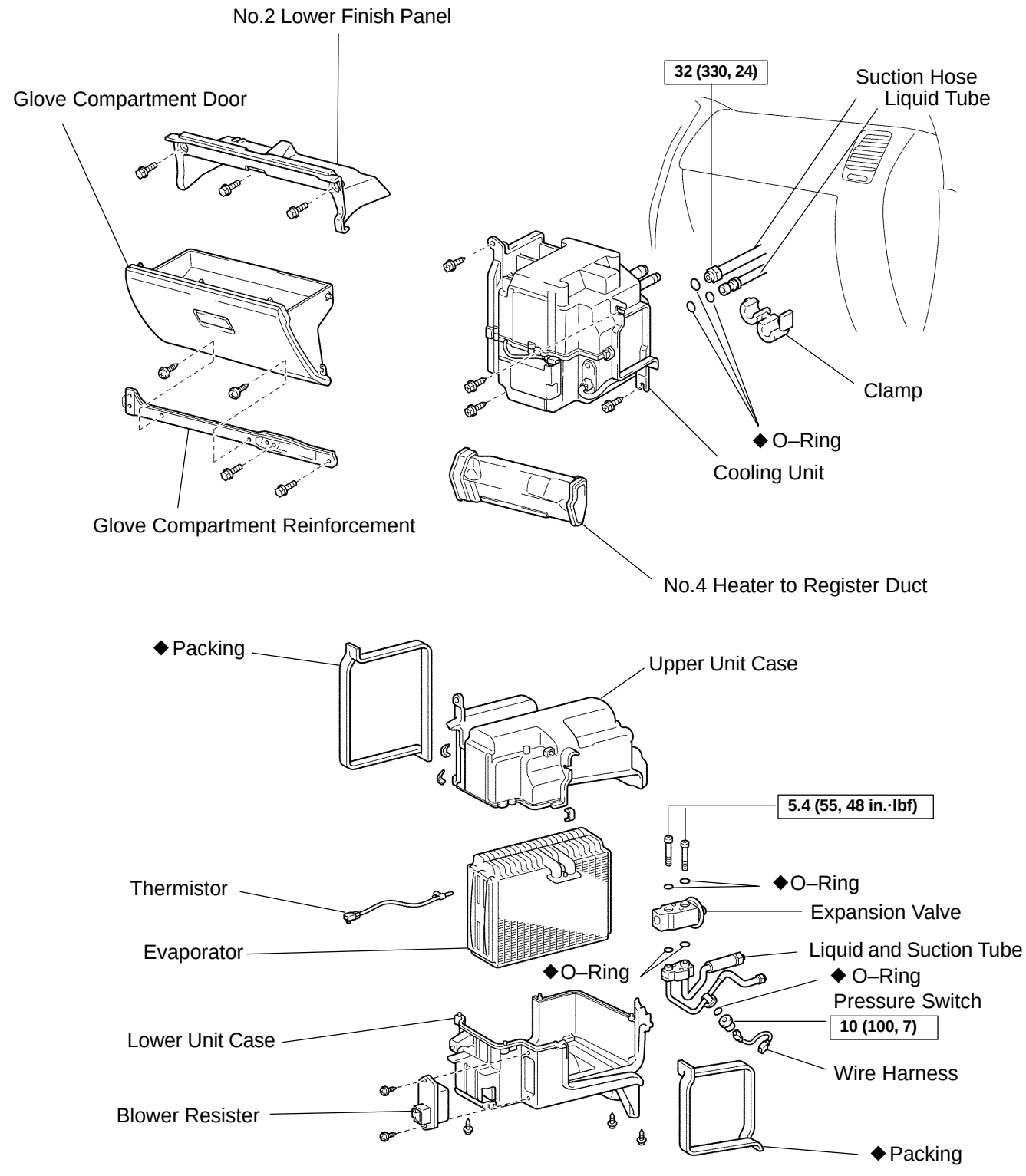

AC22K–03

DISASSEMBLY

1. REMOVE BLOWER RESISTOR

Remove the 2 screws and blower resistor.

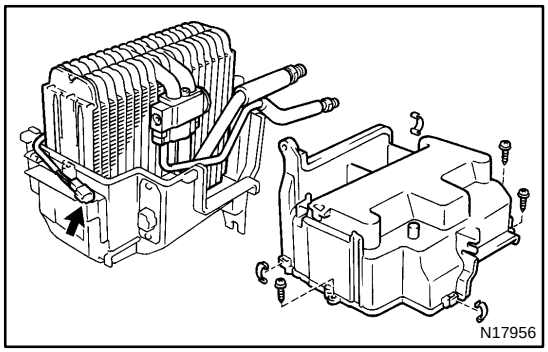

2. SEPARATE UPPER AND LOWER UNIT CASES

(a) Using a knife, cut off the each packing.
(b) Remove the 3 clips and 3 screws.
(c) Separate the upper and lower unit case.

3. REMOVE EVAPORATOR FROM LOWER UNIT CASE

HINT:

At the time of reassembly, please refer to the following item.
If evaporator is replaced, add compressor oil to compressor.

Add 40 – 50 cc (1.4 – 1.7 fl.oz.)
Compressor oil: ND–OIL 8 or equivalent

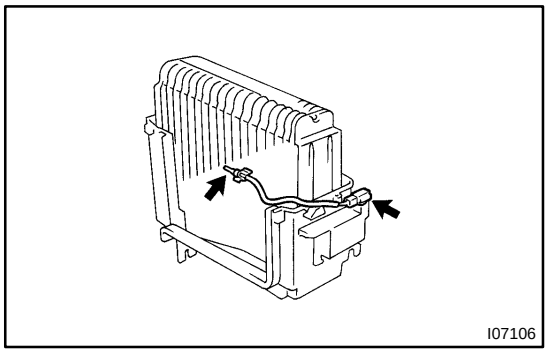

4. REMOVE THERMISTOR

(a) Disconnect the connector clamp.
(b) Pull out the thermistor from evaporator.

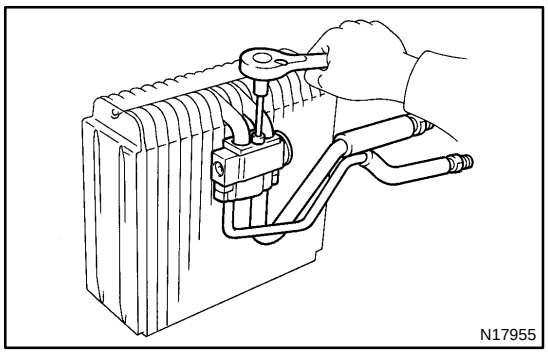

5. REMOVE EXPANSION VALVE

Using a hexagon wrench (5.0 mm, 0.20 in.), remove the 2 bolts and separate the expansion valve and evaporator and tubes.

Torque: 5.4 N·m (55 kgf·cm, 48 in.·lbf)

HINT:

At the time of reassembly, please refer to the following item.
Lubricate 4 new O–rings with compressor oil and install the tubes and valve.

AC3FA–01

INSPECTION

1. CHECK EVAPORATOR FINS FOR BLOCKAGE

If the fins are clogged, clean them with compressed air.

2. CHECK FITTING FOR CRACKS FOR SCRATCHES

If necessary repair or replace.

AC0CJ–01

INSTALLATION

Installation is in the reverse order of removal (See page AC–26).

COOLING UNIT

AC3F9–01

ON–VEHICLE INSPECTION

INSPECT FOR LEAKAGE OF REFRIGERANT

(a) Remove the glove compartment parts (See page BO–52).

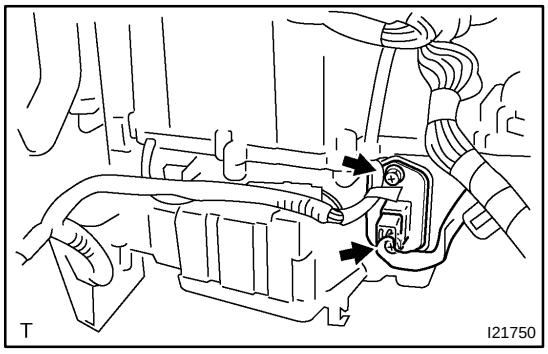

(b) Remove the blower resistor.
  (1) Disconnect the connector.
  (2) Remove the 2 screws and blower resistor.
(c) Using a gas leak detector, check for leakage.

If there is leakage, check the tightening torque at the joints or check the evaporator.

(d) Install the blower resistor with the 2 screws.
(e) Install the glove compartment parts (See page BO–55).

AC0CI–01

REASSEMBLY

Reassembly is in the reverse order of disassembly (See page AC–28).

AC22J–03

REMOVAL

1. DISCHARGE REFRIGERANT FROM REFRIGERATION SYSTEM

HINT:

At the time of installation, please refer to the following item.

Evacuate air from refrigeration system.

Charge system with refrigerant and inspect for leakage of refrigerant.

Specified amount: 650 ± 50 g (22.92 ± 1.76 oz.)

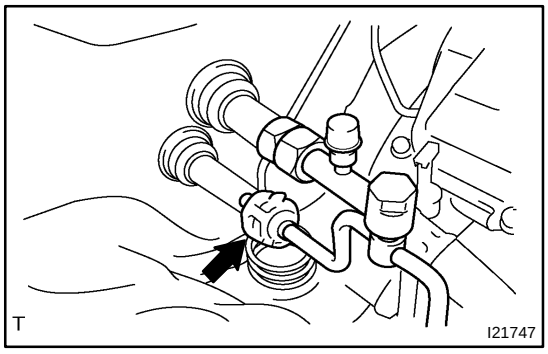

2. DISCONNECT LIQUID TUBE

(a) Using SST, remove the piping clamp.

SST 09870–00025 (Liquid tube)

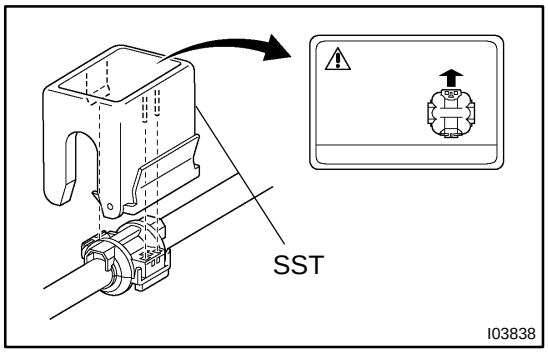

(1) Insert SST to piping clamp.

HINT:

Confirm the direction of the piping clamp claw and SST using the illustration showing on the caution label.

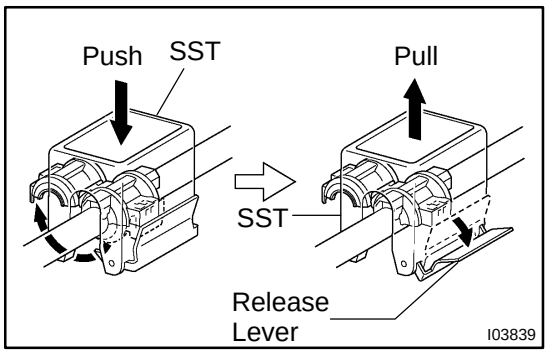

(2) Push down SST and release the clamp lock.

NOTICE:

Be careful not to deform the tubes, when pushing SST.

(3) Pull SST slightly and push the release lever, then remove the piping clamp with SST.

(4) Remove the piping clamp from SST.

(b) Disconnect the both tubes.

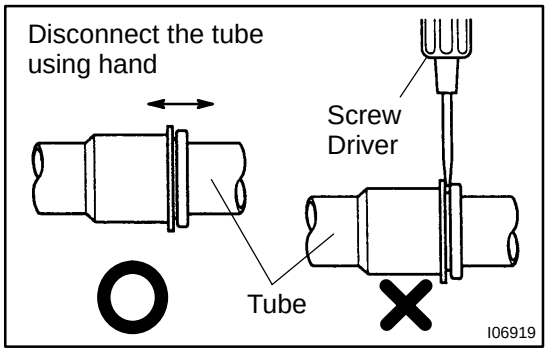

NOTICE:

- **Do not use tools like screwdriver to remove the tube.**
- **Cap the open fittings immediately to keep moisture or dirt out of the system.**

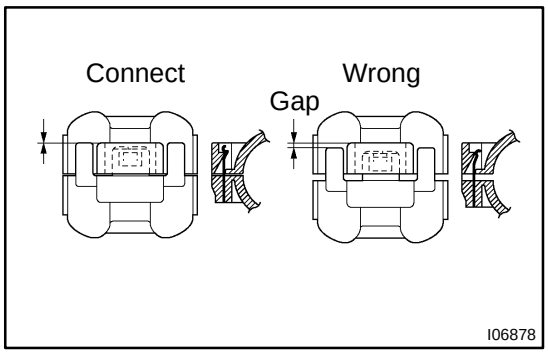

HINT:
At the time of installation, please refer to the following item.
- Lubricate 2 new O–rings with compressor oil and install them to the tubes.
- After connection, check the fitting for claw of the piping clamp.

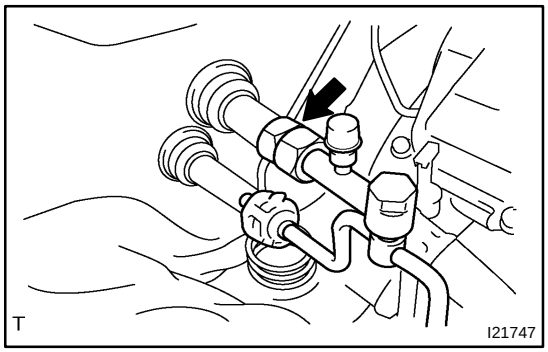

3. DISCONNECT SUCTION TUBE FROM COOLING UNIT FITTINGS

Loosen the nut and disconnect the both tube.

Torque: 32 N·m (330 kgf·cm, 24 ft·lbf)

NOTICE:

Cap the open fittings immediately to keep moisture or dirt out of the system.

HINT:
At the time of installation, please refer to the following item.
Lubricate a new O–ring with compressor oil and install them to the tube.

4. REMOVE 2 GROMMETS

5. REMOVE DRAIN PIPE GROMMET

6. REMOVE GLOVE COMPARTMENT PARTS (See page BO–52)

7. REMOVE No.4 HEATER TO REGISTER DUCT

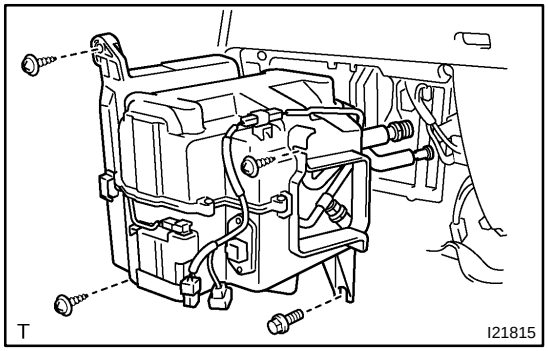

8. REMOVE COOLING UNIT

(a) Disconnect the connectors.
(b) Remove the 3 screws, bolt and the cooling unit.

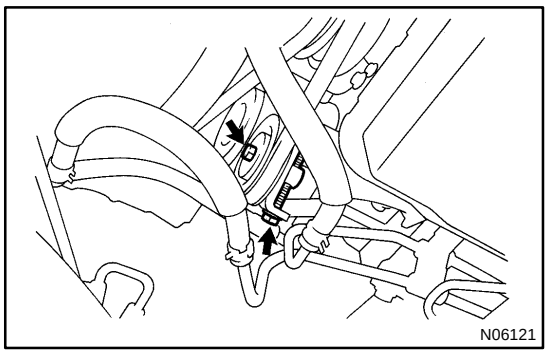

AC07B–01

INSTALLATION

1. **TIGHTEN IDLE PULLEY LOCK NUT TEMPORALLY**
   Torque: 2.5 N·m (25 kgf·cm, 22 in.·lbf)
2. **INSTALL DRIVE BELT**
3. **USING ADJUSTING BOLT, ADJUST DRIVE BELT TENSION**
   Drive belt tension
   New belt: 160 ± 25 lbf
   Used belt: 100 ± 25 lbf
4. **TIGHTEN IDLE PULLEY LOCK NUT**
   Torque: 39 N·m (400 kgf·cm, 29 ft·lbf)
5. **INSTALL PS PUMP DRIVE BELT**
6. **INSTALL ENGINE UNDER COVER**

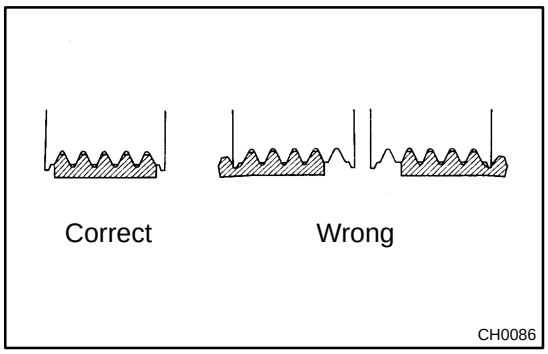

DRIVE BELT

AC079–01

ON–VEHICLE INSPECTION

1. INSPECT DRIVE BELT'S INSTALLATION CONDITION

Check that the drive belt fits properly in the ribbed grooves.

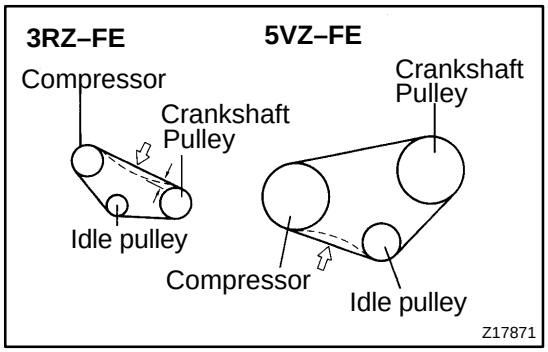

2. INSPECT DRIVE BELT TENSION

Using a belt tension gauge, check the drive belt tension.

Drive belt tension:

New belt 160 ± 25 lbf

Used belt 100 ± 20 lbf

HINT:

- "New belt" refers to a belt which has been used less than 5 minutes on a running engine.
- "Used belt" refers to a belt which has been used on a running engine for 5 minutes or more.
- After installing the drive belt, check that it fits properly in the ribbed grooves.

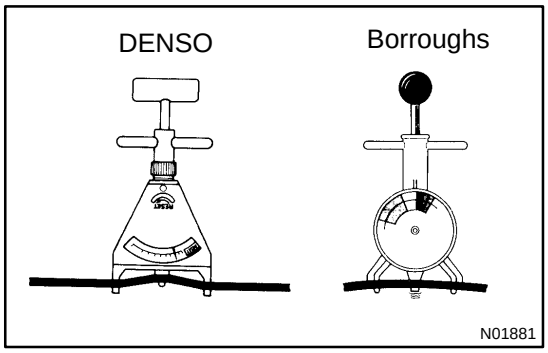

AC07A–01

REMOVAL

1. **REMOVE PS PUMP DRIVE BELT**
   2RZ–FE and 3RZ–FE: (See page SR–34)
   5VZ–FE: (See page SR–45)
2. **REMOVE ENGINE UNDER COVER**

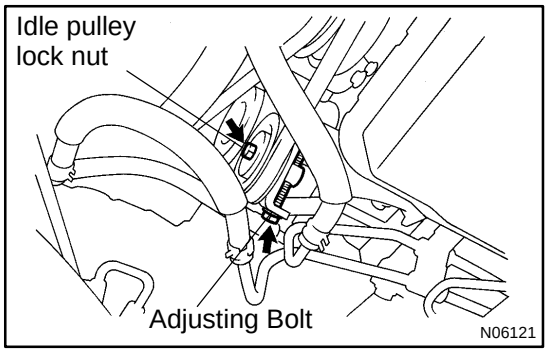

3. **LOOSEN IDLE PULLEY LOCK NUT**
   Torque: 39 N·m (400 kgf·cm, 29 ft·lbf)
4. **REMOVE COMPRESSOR DRIVE BELT**

Loosen drive belt tension by adjusting bolt and remove the drive belt.

AC089–01

INSPECTION

1. CHECK EVAPORATOR FINS FOR BLOCKAGE

If the fins are clogged, clean them wth compressed air.

2. CHECK FITTING FOR CRACKS FOR SCRATCHES

Repair as necessary.

AC08A–01

INSTALLATION

Installation is in the reverse order of removal (See page AC–59).

EVAPORATOR

AC088–01

REMOVAL

1. REMOVE COOLING UNIT

(See page AC–26)

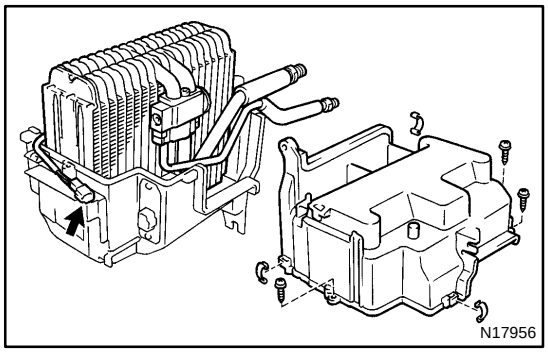

2. REMOVE EVAPORATOR

(a) Using a knife, cut off each packing.

(b) Remove the 3 screws and 3 clips, then separate the upper and lower case.

(c) Disconnect the connector clamp.

(d) Remove the evaporator.

HINT:

At the time of installation, please refer to the following item.

If evaporator is replaced, add compressor oil to evaporator.

Add 40 cc (1.4 fl.oz.)

Compressor oil: ND–OIL 8 or equivalent

AC08G–01

INSTALLATION

Installation is in the reverse order of removal (See page AC–66).

EXPANSION VALVE

AC08E–01

ON–VEHICLE INSPECTION

1. CHECK QUANTITY OF GAS DURING REFRIGERATION CYCLE

2. SET ON MANIFOLD GAUGE SET

(See page AC–19)

3. RUN ENGINE

(a) Run the engine at 1,500 rpm for at least 5 minutes.

(b) Then check that the high pressure reading is 1.37 – 1.57 MPa (14 – 16 kgf/cm^2, 199 – 228 psi).

4. CHECK EXPANSION VALVE

If the expansion valve is faulty, the low pressure reading will drop to 0 kPa (0 kgf/cm^2, 0 psi).

HINT:

When the low pressure drops to 0 kPa (0 kgf/cm^2, 0 psi), check the receiver's IN and OUT sides for no temperature difference.

AC08F–01

REMOVAL

1. REMOVE EVAPORATOR

(See page AC–59)

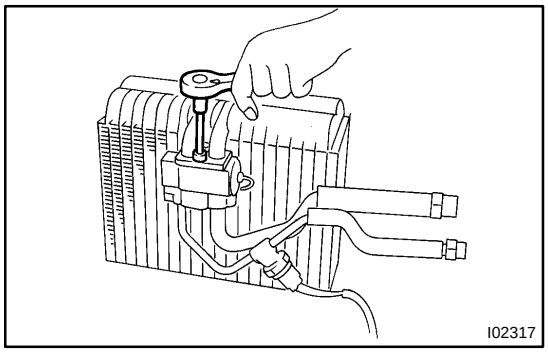

2. REMOVE EXPANSION VALVE

Using a hexagon wrench, remove the 2 bolts and separate the expansion valve and evaporator and tubes.

Torque: 5.4 N·m (55 kgf·cm, 48 in.·lbf)

HINT:

At the time of installation, please refer to the following item.

Lubricate 4 new O–rings with compressor oil and install the tubes and valve.

AC3FJ–01

COMPONENTS

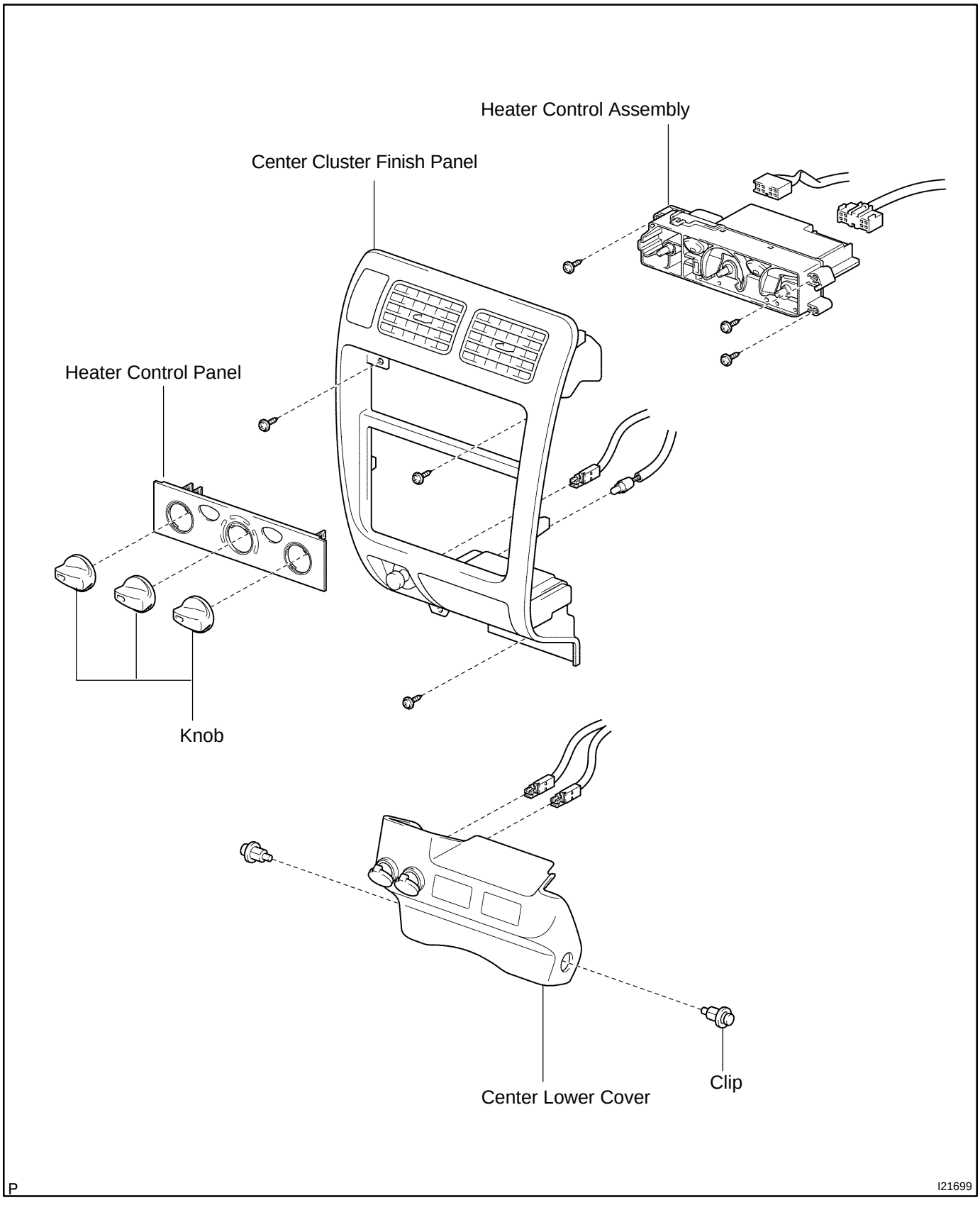

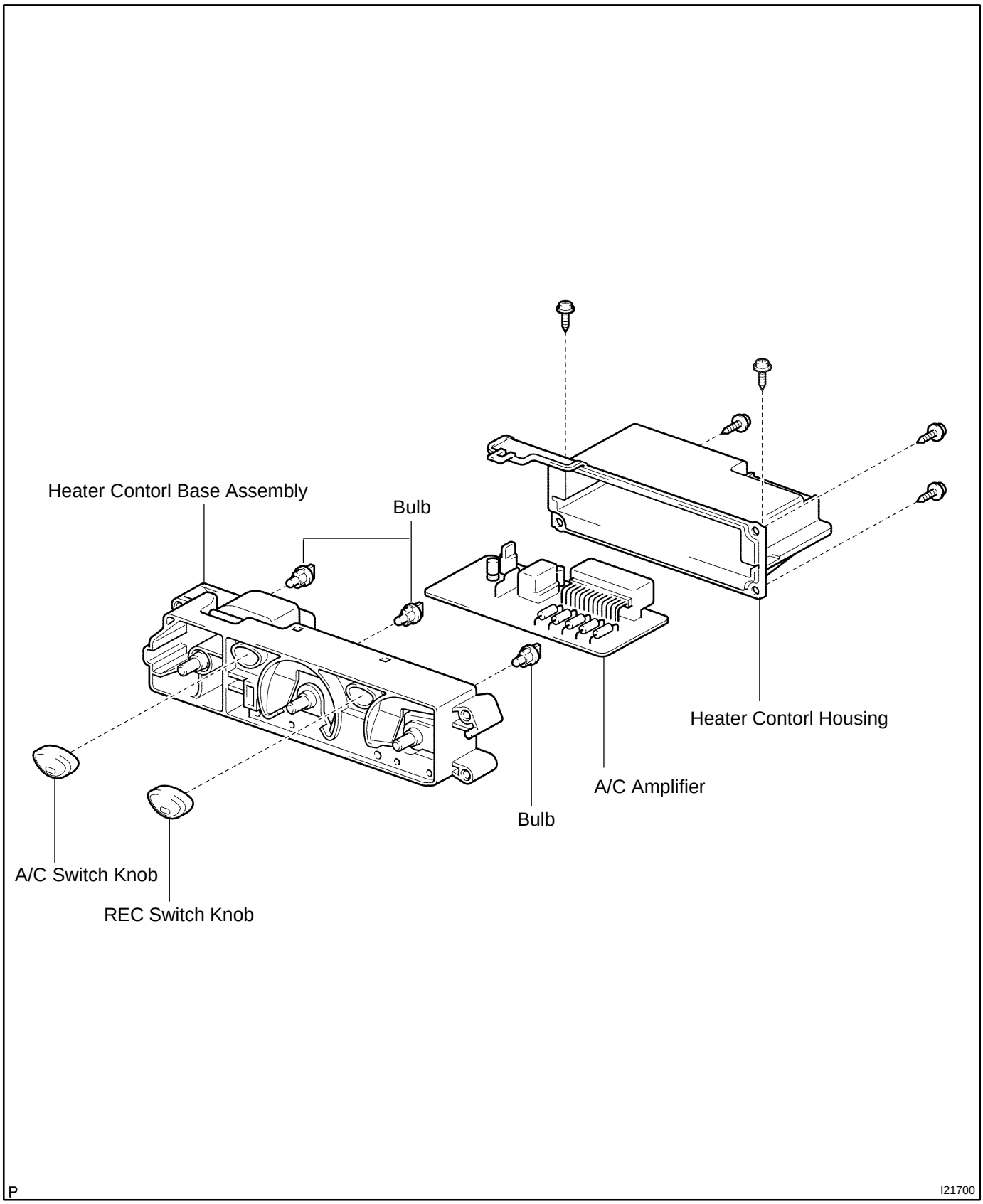
Heater Contorl Base Assembly
Bulb
Heater Contorl Housing
A/C Amplifier
Bulb
A/C Switch Knob
REC Switch Knob
P
I21700

AC3FK–01

DISASSEMBLY

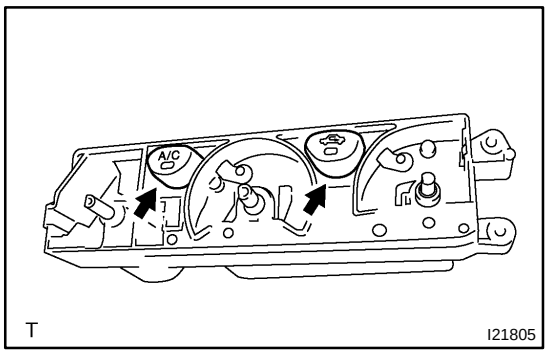

1. REMOVE A/C SWITCH KNOB AND REC SWITCH KNOB

Using a small screwdriver, pry out the 2 knobs.

HINT:

Tape the small screwdriver tip before use.

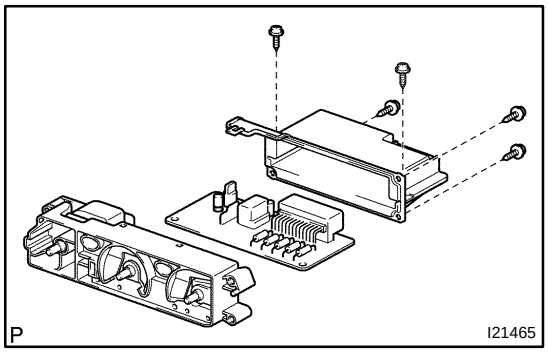

2. REMOVE A/C AMPLIFIER

(a) Remove the 5 screws.

(b) Remove the A/C control panel case and amplifier.

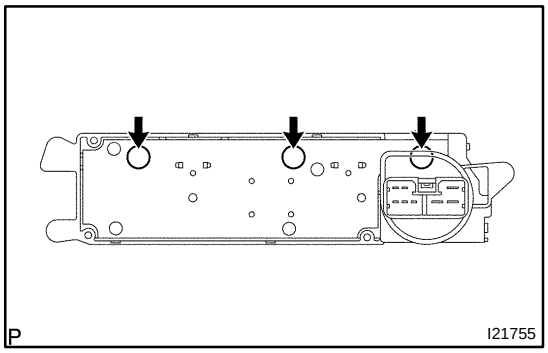

3. REMOVE BULB

Using a screwdriver, turn the bulb to the left and pull out the bulb.

AC3FL–01

INSPECTION

1. INSPECT ILLUMINATION OPERATION

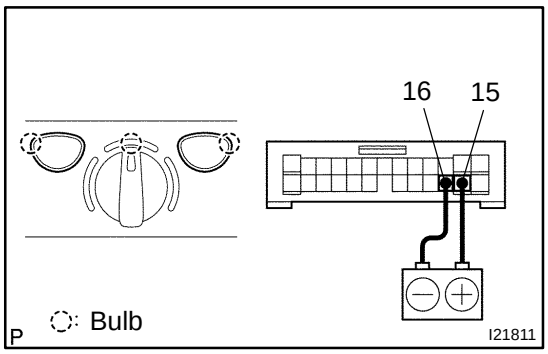

Connect the positive (+) lead from the battery to terminal 15 and negative (–) lead to terminal 16 then check that the illuminations lights up.

If operation is not as specified, check the faulty bulb.

2. INSPECT BULB

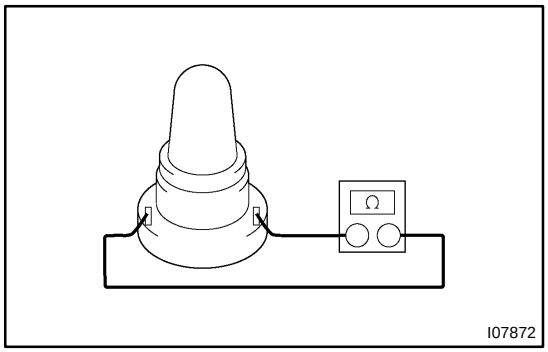

Apply the tester as shown in the illustration to the test for continuity.

If continuity exists, replace the heater control.

If no continuity exists, replace the bulb.

3. INSPECT RECIRC INDICATOR OPERATION

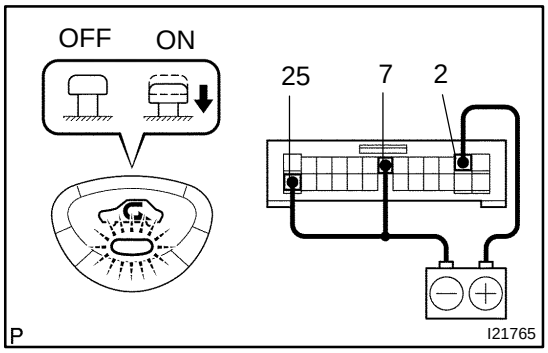

(a) Connect the positive (+) lead from the battery to terminal 2 and the negative (–) lead to terminal 7, 25.

(b) Push the REC button in and then check that the indicator lights up.

If operation is not as specified, replace the switch circuit board.

4. INSPECT DIMMING OPERATION

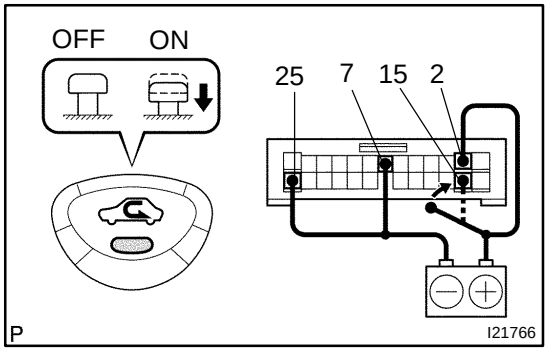

(a) Connect the positive (+) lead from the battery to terminal 2 and the negative (–) lead to terminal 7, 25 while press the switch.

(b) Push the REC button in and then check that the indicator lights up.

(c) Connect the positive (+) lead from the battery to terminal 15 and then check that the indicator dims.

If operation is not as specified, replace the switch circuit board.

5. INSPECT A/C INDICATOR OPERATION

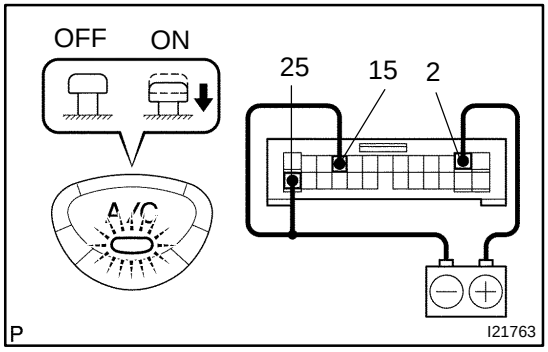

(a) Connect the positive (+) lead from the battery to terminal 2 and negative (–) lead to terminal 10, 25.

(b) Push the A/C button in and then check that the indicator lights up.

If operation is not as specified, replace the switch circuit board.

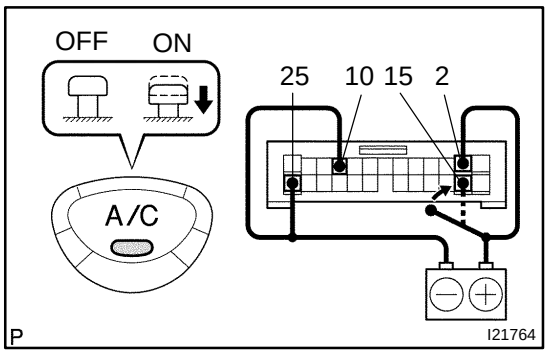

6. INSPECT DIMMING OPERATION

(a) Connect the positive (+) lead from the battery to terminal 2 and negative (–) lead to terminal 10, 25 while press the switch.

(b) Push the A/C button in and then check that the indicator lights up.

(c) Connect the positive (+) lead from the battery to terminal 20 and then check that the indicator dims.

If operation is not as specified, replace the switch circuit board.

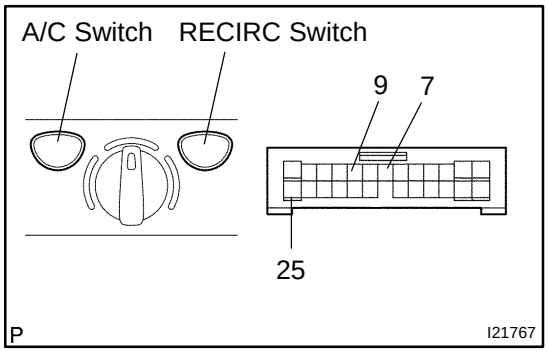

7. INSPECT SWITCH CONTINUITY

Check the continuity between terminals while switch is pressed, as shown in the chart.

Switch	Tester connection	Specified condition
A/C	9 – 25	Continuity
RECIRC	7 – 25	Continuity

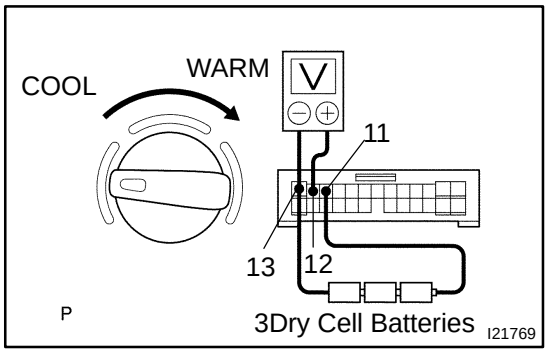

8. INSPECT TEMPERATURE CONTROL SWITCH OPERATION

(a) Check that the resistance between terminals 11 and 13 is approx. 3.0 KΩ

(b) Connect the positive (+) lead from the three 1.5 V dry cell batteries to terminal 11 and negative (–) lead to terminal 13.

(c) Connect the positive (+) lead from the tester to terminal 12 and negative (–) lead to terminal 13.

(d) Gradually turn the switch from ”MAX. WARM” side to ”MAX. COOL” side and check that the voltage increase from 0 to 4.5 V.

If operation is not as specified, replace the heater control base.

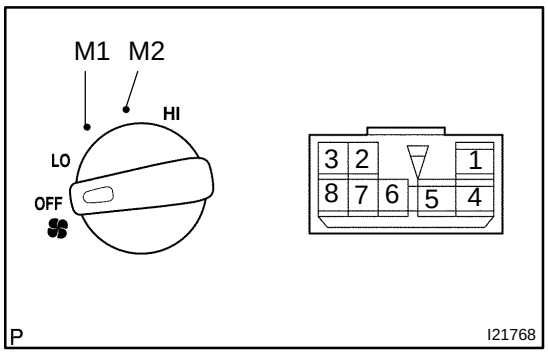

9. INSPECT BLOWER SPEED CONTROL SWITCH OPERATION

Check the continuity between terminals at each switch position as shown in the chart.

Position/ Circuit	Tester connection	Specified condition
OFF	–	No continuity
LO	1 – 8	Continuity
M1	1 – 6 – 8	Continuity
M2	1 – 5 – 8	Continuity
HI	1 – 4 – 8	Continuity

If continuity is not as specified, replace the heater control base.

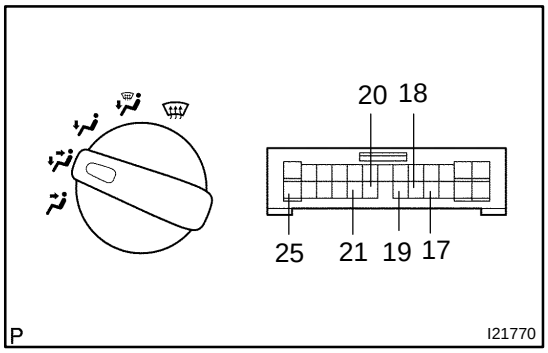

10. INSPECT MODE SWITCH CONTINUITY

Check the continuIty between terminals at each switch position as shown in the chart.

Switch position	Tester connection	Specified condition
FACE	17 – 25	Continuity
B/L	18 – 25	Continuity
FOOT	19 – 25	Continuity
FOOT/DEF.	20 – 25	Continuity
DEF.	21 – 25	Continuity

If continuity is not as specified, replace the switch.

AC3FM–01

INSTALLATION

Installation is in the reverse order of removal (See page AC–89).

HEATER CONTROL ASSEMBLY

AC3FI–01

ON–VEHICLE INSPECTION

1. INSPECT HEATER CONTROL DIALS OPERATION

Move the control dials left and right check for stiffness and binding the full range of the dials.

2. REMOVE HEATER CONTROL ASSEMBLY (See page AC–89)

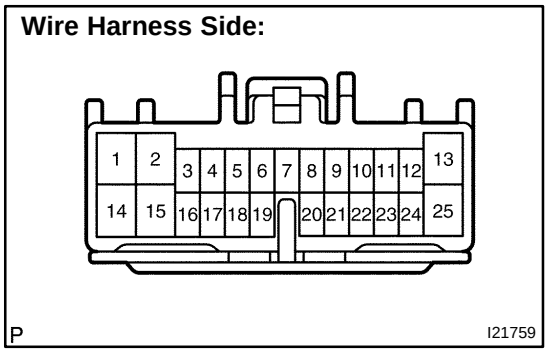

3. INSPECT AMPLIFILER CIRCUIT

(a) Inspect the connector on wire harness side, as shown in the chart below.

Test conditions:

- Turn ignition switch to ON
- Blower speed switch HI
- Temperature control lever Max. COOL

Tester connection	Condition	Specified condition
1 – Ground	Always	Battery voltage
2 – Ground	Turn ignition switch to ON	Battery voltage
2 – Ground	Turn ignition switch to OFF	No voltage
11 – 13	Always	4.5 – 5.5
15 – 16	Turn light control switch to TALL	Battery voltage
15 – 16	Turn light control switch to OFF	No voltage

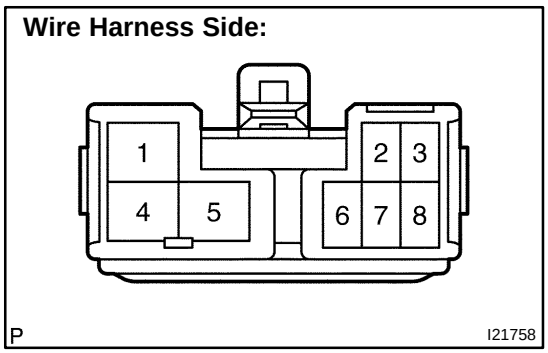

(b) Disconnect the amplifier connector and inspect the connector on wire harness side, as shown in the chart below.

Test conditions:

- Turn ignition switch to ON
- Blower speed switch HI
- Temperature control lever Max. COOL

Tester connection	Condition	Specified condition
1 – Ground	Always	Below 1 Ω

From back side:

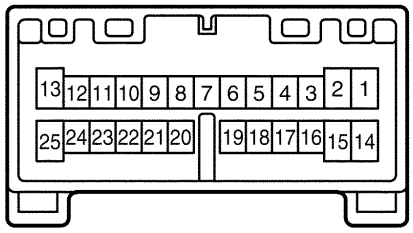

(c) Connect the connector to amplifier and inspect wire harness side connector from the back side, as shown in the chart below.

Test conditions:

- Running engine at idle speed
- Blower speed switch HI
- A/C switch ON
- Temperature control lever Max. COOL

Tester connection	Condition	Specified condition
3 – Ground	IG ON.	Below 1.0 V
3 – Ground	IG ON. Disconnect pressure switch connector	10 –14 V
4 – Ground	IG ON. Set temp. MAX. COOL	10 – 14 V
4 – Ground	IG ON. Set temp. MAX. HOT	Below 1.0 V
5 – Ground	IG ON. Set temp. MAX. HOT	10 – 14 V
5 – Ground	IG ON. Set temp. MAX. COOL	Below 1.0 V
6 – Ground	IG ON. Air inlet selector: FRESH	10 – 14 V
6 – Ground	IG ON. Air inlet selector: RECIRCULATE	Below 1.0 V
7 – Ground	IG ON. Air inlet selector: RECIRCULATE	10 – 14 V
7 – Ground	IG ON. Air inlet selector: FRESH	Below 1.0 V
8 – Ground	IG ON. Operate blower motor	Below 1.0 V
9 – Ground	A/C switch to OFF	10 – 14 V
9 – Ground	A/C switch to ON	Below 1.0 V
10 – Ground	A/C switch to ON	10 – 14 V
10 – Ground	A/C switch to OFF	Below 1.0 V
14 – Ground	A/C switch to ON	Below 1.0 V
14 – Ground	A/C switch to OFF	10 – 14 V
17 – Ground	Mode selector: FACE	10 – 14 V
17 – Ground	Mode selector: Except FACE	Below 1.0 V
18 – Ground	Mode selector: B/L	10 – 14 V
18 – Ground	Mode selector: Except B/L	Below 1.0 V
19 – Ground	Mode selector: FOOT	10 – 14 V
19 – Ground	Mode selector: Except FOOT	Below 1.0 V
20 – Ground	Mode selector: F/D	10 – 14 V
20 – Ground	Mode selector: Except F/D	Below 1.0 V
21 – Ground	Mode selector: DEF	10 – 14 V
21 – Ground	Mode selector: Except DEF	Below 1.0 V
23 – Ground	Ambient temp. 25 ˚C (77 ˚F)	1.8 – 2.2 V
23 – Ground	Ambient temp. 40 ˚C (104 ˚F)	1.2 – 2.2 V

AC0EJ–03

REASSEMBLY

Reassembly is in the reverse order of disassembly (See page AC–90).

AC23A–02

REMOVAL

1. REMOVE CENTER LOWER COVER (See page BO–52)

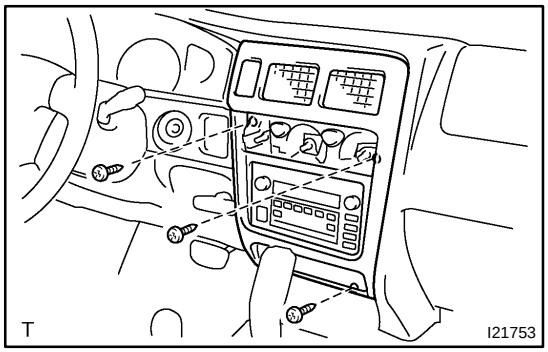

2. REMOVE CENTER CLUSTER FINISH PANEL (See page BO–52)

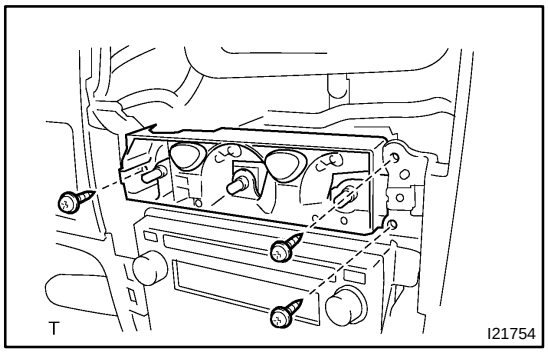

3. REMOVE HEATER CONTROL ASSEMBLY

Remove the 3 screws and pull out the heater control assembly, then disconnect the 2 connectors.

AC08C–01

INSPECTION

INSPECT FINS FOR BLOCKAGE

If the fins are clogged, clean them with compressed air.

AC08D–01

INSTALLATION

Installation is in the reverse order of removal (See page AC–62).

HEATER RADIATOR

AC3FP–01

REMOVAL

1. REMOVE HEATER UNIT (See page AC–34)

2. REMOVE HEATER RADIATOR

(a) Remove the 5 screws and 2 plates and clamp.

(b) Pull out the heater radiator.

(c) Remove the 2 screws and 2 clips, then disconnect the heater radiator pipes.

HINT:

At the time of reassembly, please refer to the following item.

Do not reuse 2 O–rings.

HEATER UNIT

COMPONENTS

AC3FB–01

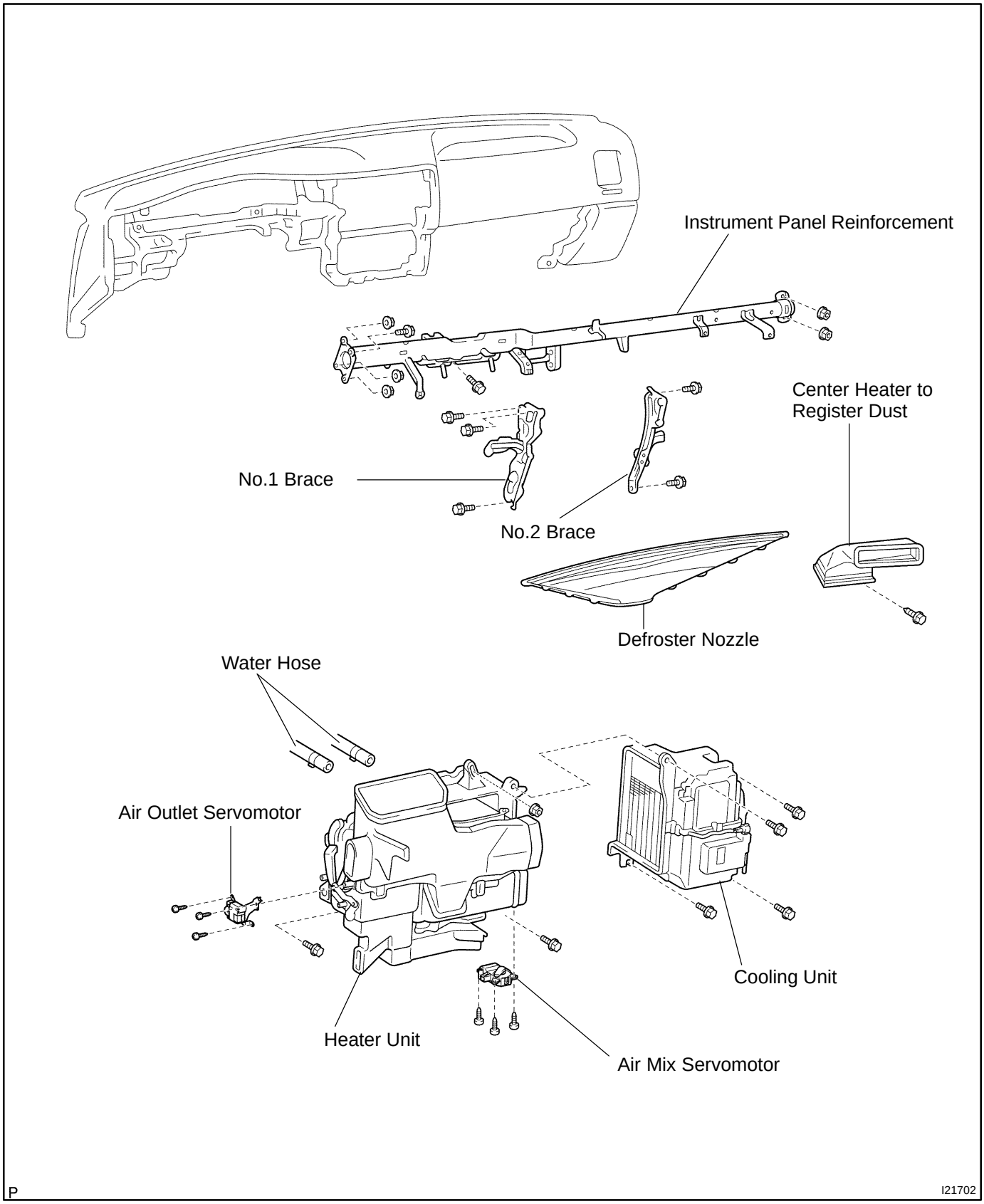

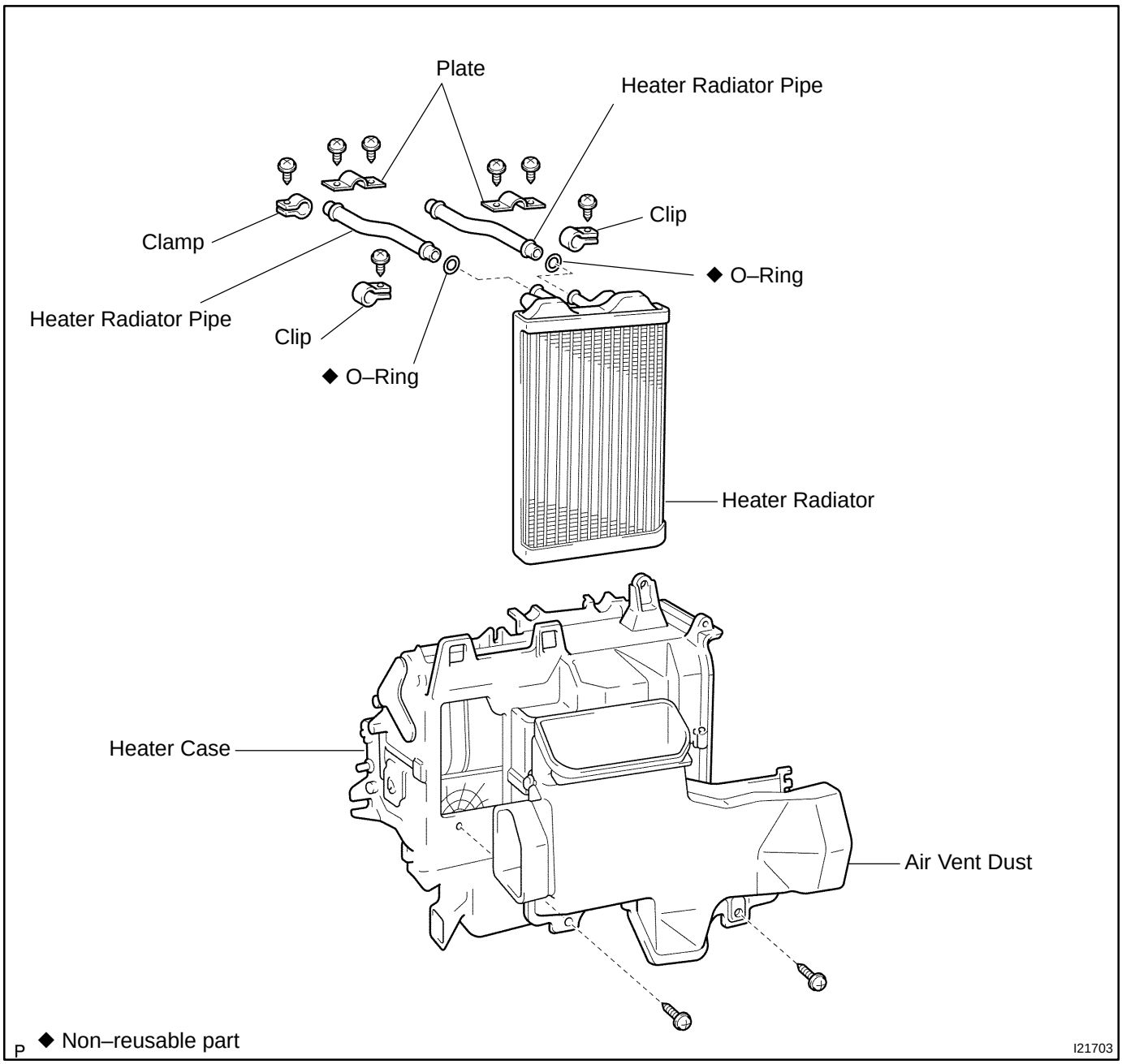
Plate
Heater Radiator Pipe
Clip
Clamp
◆ O–Ring
Heater Radiator Pipe
Clip
◆ O–Ring
Heater Radiator
Heater Case
Air Vent Dust
P ◆ Non–reusable part
I21703

AC07P–04

DISASSEMBLY

1. REMOVE AIR MIX SERVOMOTOR (See page AC–74)

2. REMOVE AIR OUTLET SERVOMOTOR (See page AC–76)

3. REMOVE HEATER RADIATOR

(a) Remove the 5 screws and 2 plates and clamp.

(b) Pull out the heater radiator.

(c) Remove the 2 screws and 2 clips, then disconnect the heater radiator pipes.

HINT:

At the time of reassembly, please refer to the following item.

Do not reuse 2 O–rings.

4. REMOVE AIR VENT DUCT

Remove the 2 screws and duct.

AC07Q–01

INSTALLATION

Installation is in the reverse order of removal (See page AC–34).

AC07O–01

REASSEMBLY

Reassembly is in the reverse order of disassembly (See page AC–35).

AC07N–02

REMOVAL

1. REMOVE COOLING UNIT (See page AC–26)

2. DRAIN ENGINE COOLANT FROM RADIATOR

HINT:

It is not necessary to drain out all the coolant.

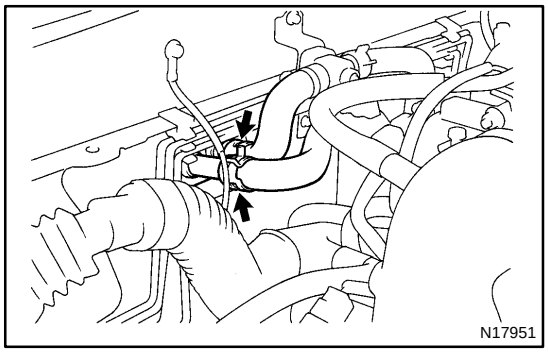

3. DISCONNECT WATER HOSES FROM HEATER RADIATOR PIPES

(a) Using pliers, grip the claw of the hose clip and slide the clip along the hose

(b) Disconnect the water hoses from the heater radiator pipes.

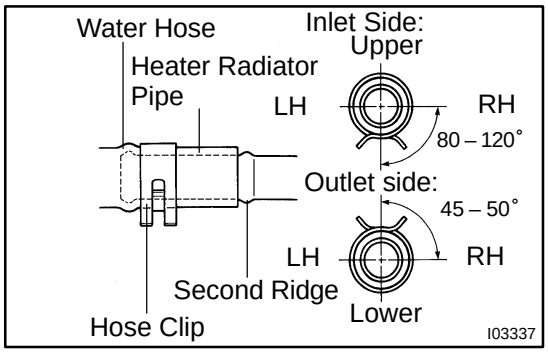

HINT:

At the time of installation, please refer to the following items.

- Push the water hose onto the heater radiator pipe as far as the second ridge on the pipe.
- Install the hose clip in the position, as shown in the illustration.

4. REMOVE INSTRUMENT PANEL AND REINFORCEMENT (See page BO–52)

5. REMOVE DEFROSTER NOZZLE AND HEATER TO REGISTER DUCT

6. DISCONNECT AIR OUTLET SERVOMOTOR CONNECTOR

7. DISCONNECT AIR MIX SERVOMOTOR CONNECTOR

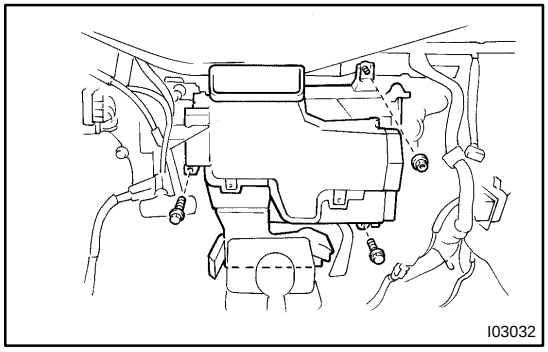

8. REMOVE HEATER UNIT

Remove the 2 bolts, nut and heater unit.

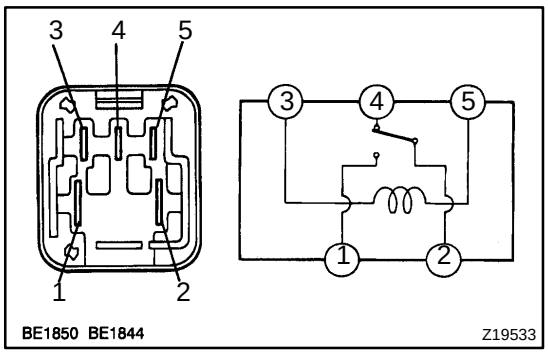

HEATER MAIN RELAY

INSPECTION

AC08X–01

INSPECT HEATER MAIN RELAY (Making: HTR) CONTINUITY

Condition	Tester connection	Specified condition
Constant	2 – 4 3 – 5	Continuity
Apply B+ between terminals 3 and 5	1 – 2	Continuity

If continuity is not as specified, replace the relay.

AC07D–01

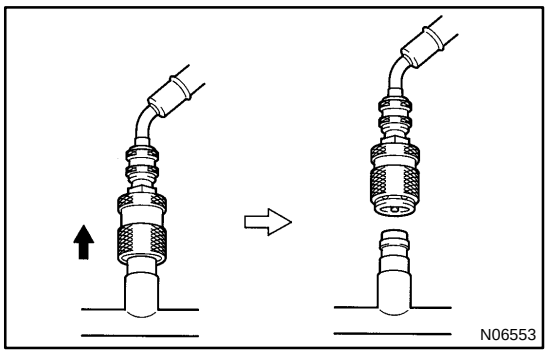

SET OFF

1. **CLOSE BOTH HAND VALVE OF MANIFOLD GAUGE SET**
2. **DISCONNECT QUICK DISCONNECT ADAPTERS FROM SERVICE VALVES ON REFRIGERANT LINE**

HINT:

Slide the sleeve of the quick disconnect adapter upward to unlock the adapter and remove it from the service valve.

3. **INSTALL CAPS TO SERVICE VALVES ON REFRIGERANT LINE**

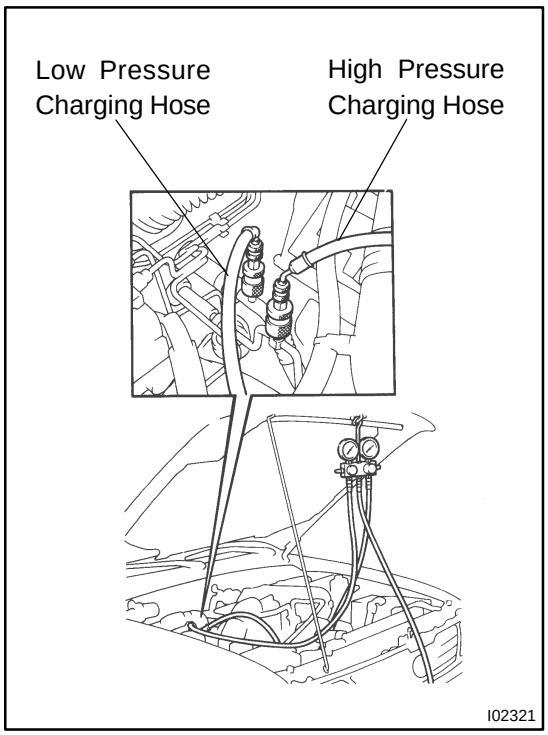

MANIFOLD GAUGE SET

AC07C–01

SET ON

1. CONNECT CHARGE HOSE TO MANIFOLD GAUGE SET

Tighten the nuts by hand.

CAUTION:

Do not connect the wrong hoses.

2. CONNECT QUICK DISCONNECT ADAPTERS TO CHARGING HOSES

Tighten the nuts by hand.

3. CLOSE BOTH HAND VALVE OF MANIFOLD GAUGE SET

4. REMOVE CAPS FROM SERVICE VALVE ON REFRIGERANT LINE

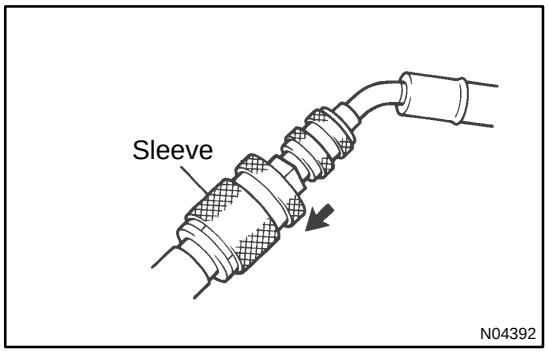

5. CONNECT QUICK DISCONNECT ADAPTER TO SERVICE VALVES

HINT:

Push the quick disconnect adapter onto the service valve, then slide, then slide the sleeve of the quick disconnect adapter downward to lock it.

AC08W–01

INSTALLATION

Installation is in the reverse order of removal (See page AC–82).

PRESSURE SWITCH

AC08U–02

ON–VEHICLE INSPECTION

1. **SET ON MANIFOLD GAUGE SET (See page AC–19)**
2. **REMOVE GLOVE COMPARTMENT PARTS (See page BO–52)**
3. **DISCONNECT CONNECTOR FROM COOLING UNIT**
4. **SET VEHICLE IN THESE CONDITIONS:**

(a) Running engine at 2,000 rpm
(b) Blower speed control switch at HI
(c) Temperature control lever MAX. COOL
(d) A/C switch ON

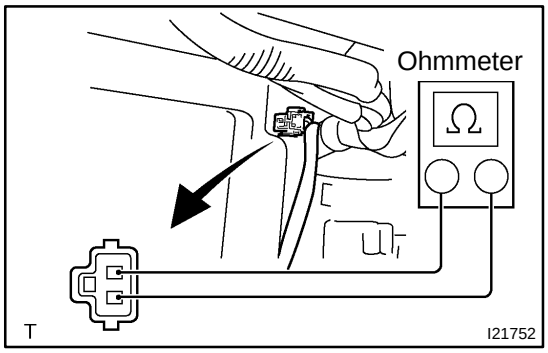

5. **INSPECT PRESSURE SWITCH OPERATION**

(a) Disconnect the pressure switch connector.
(b) Using an ohmmeter, check that there is continuity between the terminals.

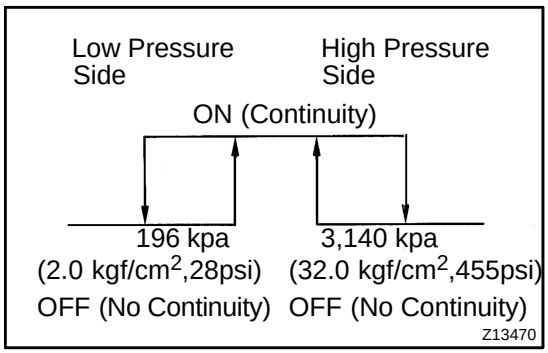

(c) When refrigerant pressure is changed, as shown in the illustration.

If operation is not as specified, replace the pressure switch.

AC08V–02

REMOVAL

1. REMOVE EVAPORATOR (See page AC–59)

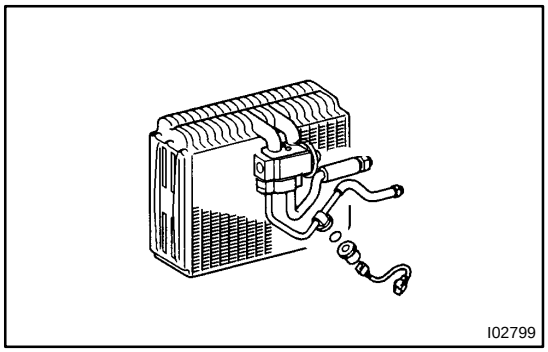

2. REMOVE PRESSURE SWITCH FROM LIQUID TUBE

(a) Disconnect the pressure switch connector.

(b) Remove the pressure switch and O–ring.

Torque: 10 N·m (100 kgf·cm, 7 ft·lbf)

HINT:

- Lock the switch mounted on the tube with an open end wrench, being careful not to deform the tube and remove the switch.
- At the time of installation, please refer to the following item.

  Lubricate a new O–ring with the compressor oil and install the switch.

AC084–01

INSTALLATION

Installation is in the reverse order of removal (See page AC–53).

RECEIVER

AC082–01

ON–VEHICLE INSPECTION

INSPECT FITTINGS FOR LEAKAGE

Using a gas leak detector, check for leakage.
If there is leakage, check the tightening toque at the joints.

AC083–01

REMOVAL

1. DISCHARGE REFRIGERANT FROM REFRIGERATION SYSTEM

HINT:

At the time of installation, please refer to the following item.

- Evacuate air from refrigeration system.
- Charge system with refrigerant and inspect for leakage of refrigerant.

  Specified amount: 600 ± 50 g (21.16 ± 1.76 oz.)

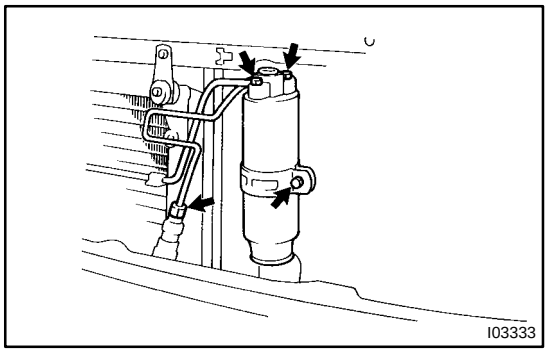

2. DISCONNECT LIQUID TUBE BETWEEN RECEIVER AND COOLING UNIT

Remove the bolt and disconnect the liquid tube.

Torque: 6.0 N·m (60 kgf·cm, 52 in.·lbf)

NOTICE:

Cap the open fittings immediately to keep moisture or dirt out of the system.

HINT:

At the time of installation, lubricate a new O–ring with compressor oil and install the tube.

3. REMOVE LIQUID TUBE BETWEEN RECEIVER AND CONDENSER

(a) Loosen the nut and disconnect the liquid tube from condenser.

Torque: 14 N·m (140 kgf·cm, 10 ft·lbf)

(b) Remove the 2 bolts and disconnect the both tubes.

Torque: 6.0 N·m (60 kgf·cm, 52 in.·lbf)

NOTICE:

Cap the open fittings immediately to keep moisture or dirt out of the system.

HINT:

At the time of installation, lubricate 3 new O–rings with compressor oil and install the tube.

4. REMOVE RECEIVER FROM RECEIVER HOLDER

Remove the holder bolt and pull the receiver upward from the holder

HINT:

At the time of installation, add compressor oil to receiver when the receiver is replaced.

Add 20 cc (0.71 fl.oz.)

Compressor oil: ND–OIL 8 or equivalent

AC07F–03

LOCATION

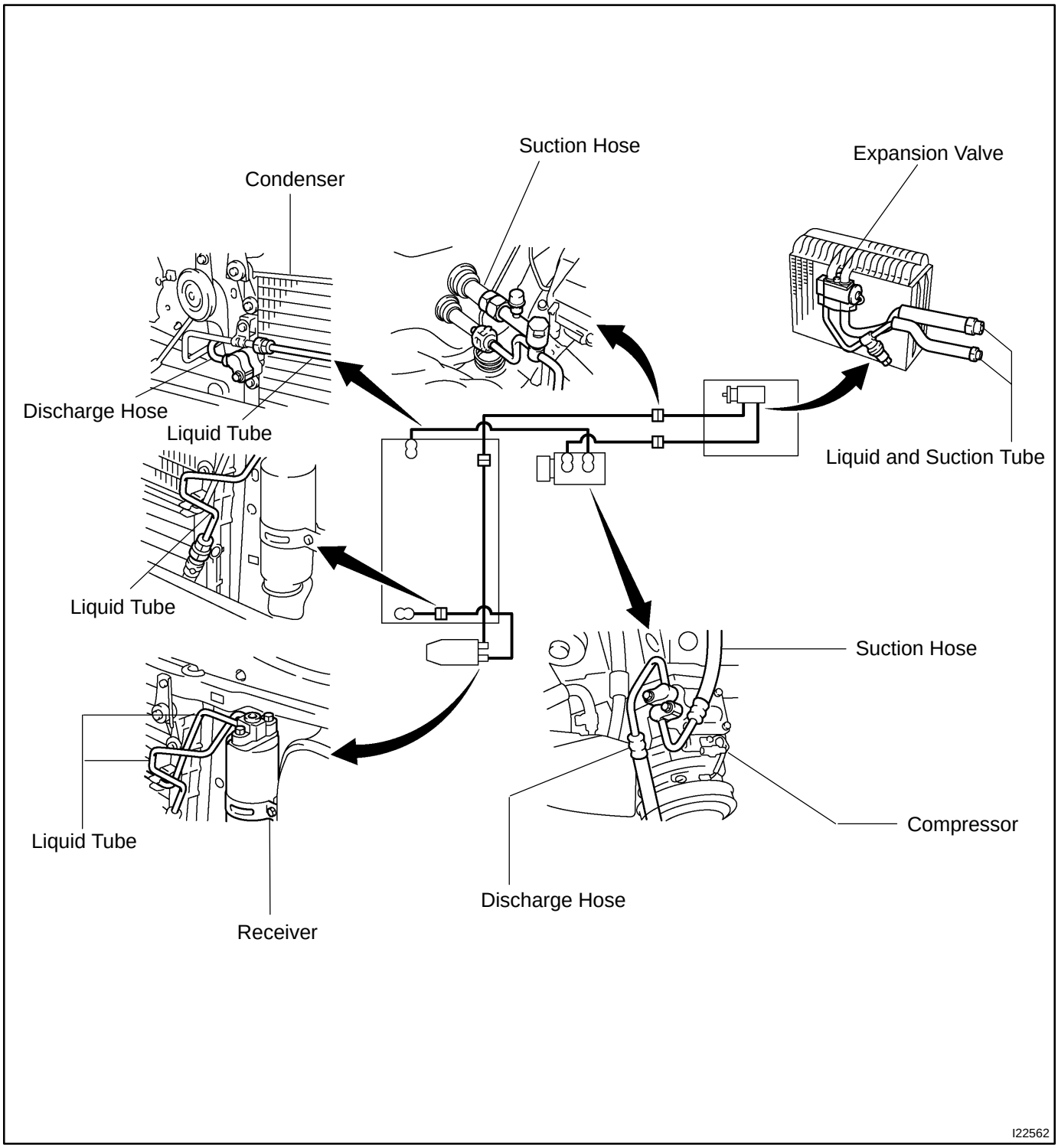

REFRIGERANT LINE

AC07G–01

ON–VEHICLE INSPECTION

1. INSPECTION HOSE AND TUBE CONNECTIONS FOR LOOSENESS

2. INSPECT HOSES AND TUBES FOR LEAKAGE

Using a gas leak detector, check for leakage of refrigerant.

AC07E–02

REPLACEMENT

1. DISCHARGE REFRIGERANT FROM REFRIGERATION SYSTEM

2. REPLACE FAULTY TUBE OR HOSE

NOTICE:

Cap the open fittings immediately to keep moisture or dirt out of the system.

3. TIGHTEN JOINT OF BOLT OR NUT AT SPECIFIED TOQUE

NOTICE:

Connections should not be torqued tighter than the specified torque.

Part tightened	N·m	kgf·cm	ft·lbf
Receiver x Liquid tube	6.0	60	52 in.·lbf
Condenser x Discharge hose	10	100	7
Condenser x Liquid tube	14	140	10
Compressor x Discharge hose	10	100	7
Compressor x Suction hose	10	100	7
Cooling unit x Suction tube	32	330	24
Expansion valve x Evaporator	5.4	55	48 in.·lbf
Suction line (Piping joint)	32	330	24
Liquid line (Piping joint)	14	140	10

4. EVACUATE AIR IN REFRIGERATION SYSTEM AND CHARGE SYSTEM WITH REFRIGERANT

Specified amount: 600 ± 50g (21.16 ± 1.76 oz.)

5. INSPECT FOR LEAKAGE OF REFRIGERANT

Using a gas leak detector, check for leakage of refrigerant.

6. INSPECT AIR CONDITIONING OPERATION

AC08S–02

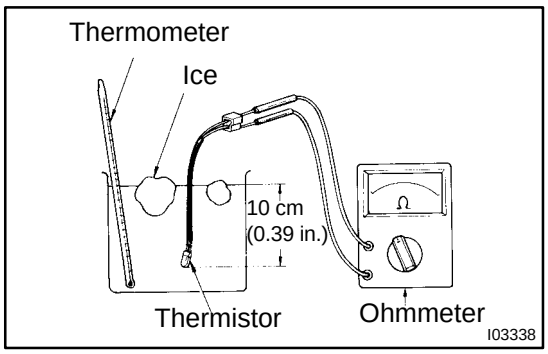

INSPECTION

INSPECT THERMISTOR RESISTANCE

(a) Place the thermistor in cold water, and while changing the temperature of the water, measure resistance at the connector and at the same time, measure temperature of the water with a thermometer.

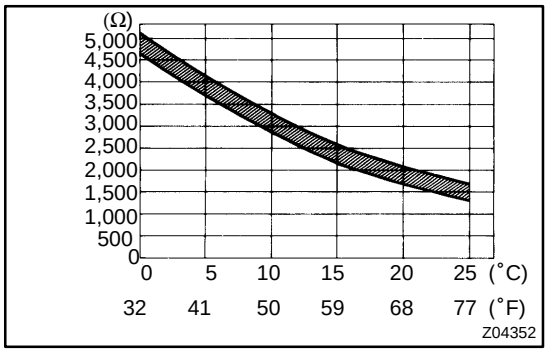

(b) Compare the 2 readings on the chart.

If resistance value is not as specified, replace the thermistor.

AC08T–01

INSTALLATION

Installation is in the reverse order of removal (See page AC–78).

THERMISTOR

AC08Q–02

ON–VEHICLE INSPECTION

1. REMOVE GLOVE COMPARTMENT PARTS (See page BO–52)

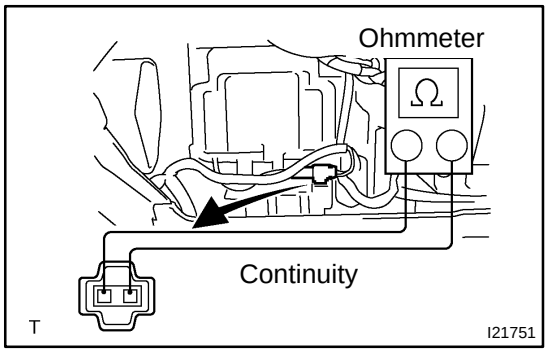

2. INSPECT THERMISTOR RESISTANCE

(a) Disconnect the connector from the thermister.

(b) Using an ohmmeter, check that there is continuity between the terminals.

Standard resistance: 1,500 Ω at 25 ˚C (77˚F)

If resistance is no continuity, proceed next inspection.

AC08R–02

REMOVAL

1. REMOVE EVAPORATOR (See page AC–59)

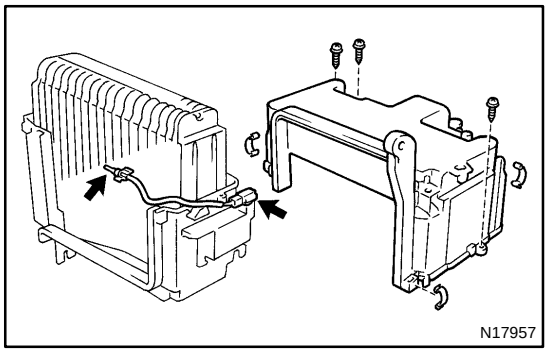

2. REMOVE THERMISTOR

(a) Disconnect the connector clamp.

(b) Pull out the thermistor from evaporator.

TROUBLESHOOTING

AC22A–04

PROBLEM SYMPTOMS TABLE

Use the table below to help you find the cause of the problem. The numbers indicate the priority of the likely cause of the problem. Check each part in order. If necessary replace these parts.

Symptom	Suspect Area	See page
No blower operation	3. HTR Fuse	–
	4. Heater main relay	AC–84
	5. Blower motor	AC–71
	6. Blower resistor	AC–72
	7. Blower speed control switch	AC–91
	8. Wire harness	–
No air temperature control	1. Engine coolant volume	–
	2. Heater control assembly	AC–85
	3. Water valve	AC–68
No compressor operation	1. Refrigerant volume	AC–3
	2. A/C Fuse	–
	3. Magnetic clutch	AC–43
	4. Compressor	AC–43
	5. Pressure switch	AC–81
	6. Heater main relay	AC–84
	7. Blower speed control switch	AC–91
	8. A/C switch	AC–91
	9. A/C amplifier	AC–85
	10.Thermistor	AC–77
	11.Wire harness	–
Compressor operates intermittently	1. Refrigerant volume	AC–3
	2. Pressure switch	AC–81
	3. A/C switch	AC–91
	4. Thermistor	AC–77
	5. Wire harness	–
No cool air comes out	1. Refrigerant volume	AC–3
	2. Refrigerant pressure	AC–3
	3. Drive belt	AC–16
	4. Magnetic clutch	AC–43
	5. Compressor	AC–43
	6. Pressure switch	AC–81
	7. Thermistor	AC–77
	8. A/C switch	AC–91
	9. A/C amplifier	AC–85
	10.Heater control assembly	AC–85
	11.Wire harness	–
Cool air comes out only at high engine rpm	1. Refrigerant volume	AC–3
	2. Drive belt	AC–16
	3. Magnetic clutch	AC–43
	4. Compressor	AC–43
	5. Condenser	AC–55
	6. Receiver	AC–52
	7. Expansion valve	AC–65
	8. Evaporator	AC–60
	9. Thermistor	AC–77
	10.A/C switch	AC–91
	11.Wire harness	–

Insufficient cooling	1. Refrigerant volume 2. Drive belt 3. Magnetic clutch 4. Compressor 5. Condenser 6. Receiver 7. Expansion valve 8. Evaporator 9. Refrigerant lines 10. Pressure switch 11. A/C amplifier 12. Heater control assembly	AC–3 AC–16 AC–43 AC–43 AC–55 AC–52 AC–65 AC–60 AC–21 AC–81 AC–85 AC–85
No engine idle–up when A/C switch ON	1. A/C amplifier 2. Idle control system 3. Wire harness	AC–85 *1 DI–169 *2 DI–381 *3 DI–383 –
No warm air comes out	1. Engine coolant volume 2. Heater control assembly 3. Water valve 4. Heater radiator	– AC–85 AC–68 AC–63

*1: 2RZ–FE and 3RZ–FE Engine Models
*2: 5VZ–FE (w/ ETCS–i) Engine Models
*3: 5VZ–FE (w/o ETCS–i) Engine Models

AC08J–01

INSTALLATION

Installation is in the reverse order of removal (See page AC–69).

WATER VALVE

AC08H–01

ON–VEHICLE INSPECTION

1. WARM UP ENGINE

2. DISCONNECT WATER VALVE CONTROL CABLE

3. INSPECT WATER VALVE OPERATION

(a) Check that warm air blown out the vent when the water valve lever is moved to ”WARM” position.

(b) Check that cool air blown out when the water valve is moved to the ”COOL” position.

If operation is not as specified, replace the water valve.

4. CONNECT WATER VALVE CONTROL CABLE

After connection, adjust the control cable.

AC08I–01

REMOVAL

1. DRAIN ENGINE COOLANT FROM RADIATOR

HINT:

It is not necessary to drain out all the coolant.

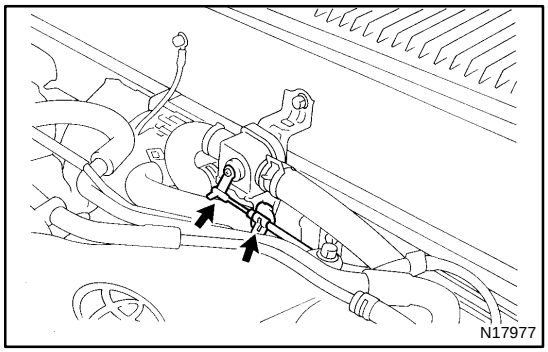

2. DISCONNECT WATER VALVE CONTROL CABLE FROM WATER VALVE

HINT:

At the time of installation, please refer to the following item

For installing the control cable, refer to ”INSTALLATION” of HEATER CONTROL ASSEMBLY on page AC–95.

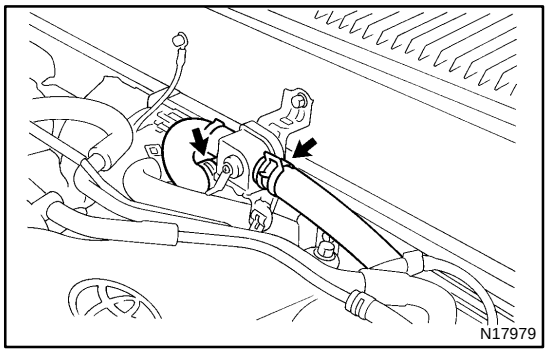

3. DISCONNECT WATER HOSES

(a) Using pliers, grip the claws of the clip and slide the clip along the hose.

(b) Disconnect the water hose.

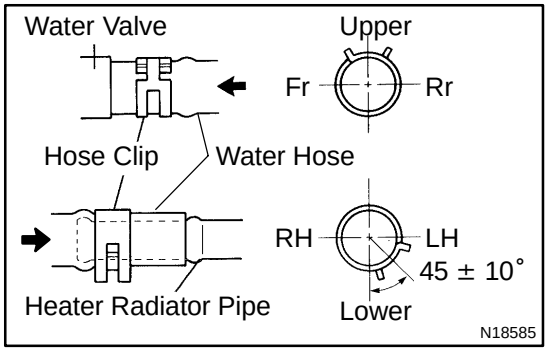

HINT:

At the time of installation, please refer to the following item.

Install the hose clip in the position, as shown in the illustration.

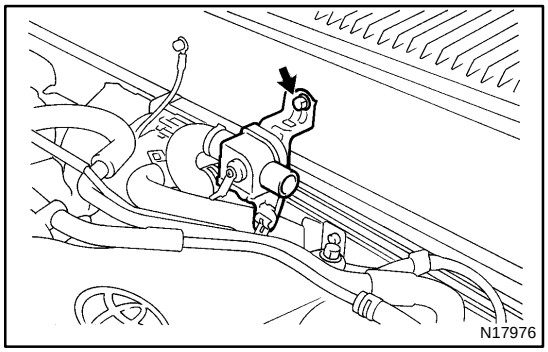

4. REMOVE WATER VALVE

Remove the bolt and water valve.

AUTOMATIC TRANSMISSION SYSTEM

OPERATION

AT018–01

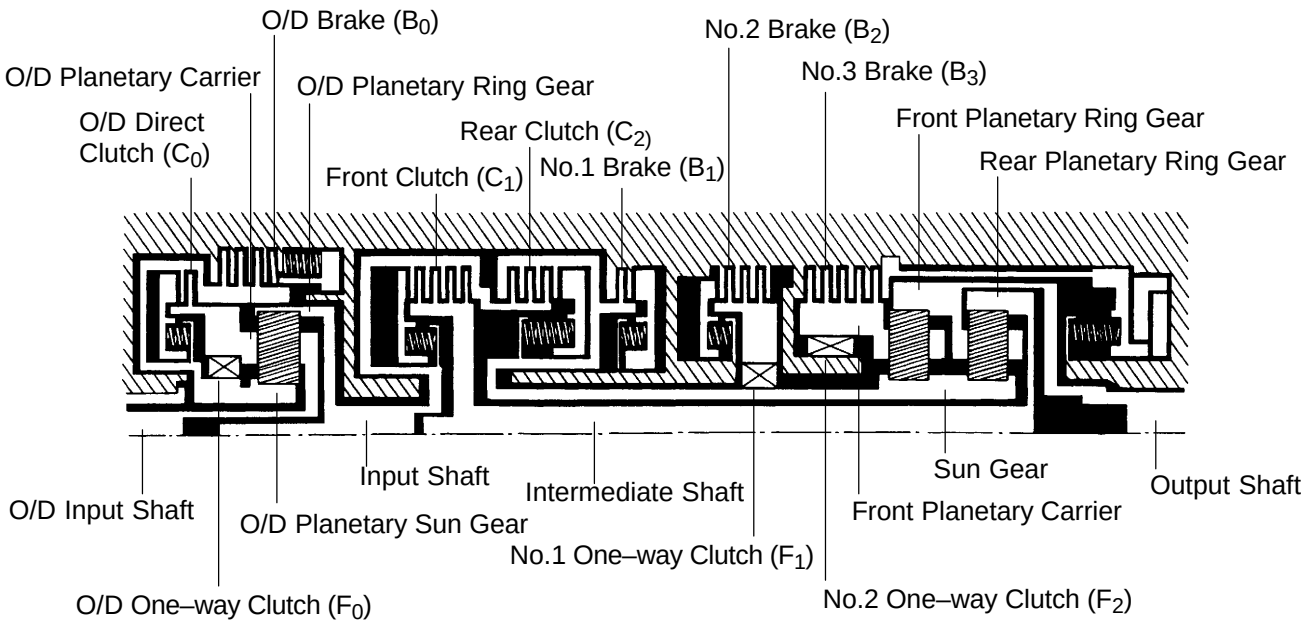

○..... Operating

Shift lever position	Gear position	C_0	C_1	C_2		B_0	B_1	B_2	B_3		F_0	F_1	F_2
				I.P.	O.P.				I.P.	O.P.			
P	Parking	○							○	○	○		
R	Reverse	○		○	○				○	○	○		
N	Neutral	○									○		
D	1st	○	○								○		○
	2nd	○	○					○			○	○	
	3rd	○	○		○			○			○		
	O/D		○		○	○		○					
2	1st	○	○								○		○
	2nd	○	○				○	○			○	○	
L	1st	○	○						○	○	○		○

I.P.: Inner Piston
O.P.: Outer Piston

D00790

AT01A–03

PROBLEM SYMPTOMS TABLE

Use the table below to help you find the cause of the problem. The numbers indicate the priority of the likely cause of the problem. Check each part in order. If necessary, replace these parts.

NOTICE:

Refer to A43D Automatic Transmission Repair Manual (Pub. No. RM387U) when ★ mark appears in the column for page numbers.

ON–VEHICLE:

Symptom	Suspect Area	See page
Does not move in any forward position	5. Off–vehicle repair matrix chart	–
Does not move in reverse position	1. Off–vehicle repair matrix chart	–
Does not move in any forward position or reverse position	1. Parking lock pawl 2. Manual valve 3. Primary regulator valve 4. Off–vehicle repair matrix chart	AT–26 ★ ★ –
No up–shift (1st → 2nd)	1. Governor valve 2. 1–2 shift valve 3. Off–vehicle repair matrix chart	AT–17 ★ –
No up–shift (2nd → 3rd)	1. Governor valve 2. 2–3 shift valve 3. Off–vehicle repair matrix chart	AT–17 ★ –
No up–shift (3rd → O/D)	1. Governor valve 2. 3–4 shift valve 3. Electrical control system check 4. Off–vehicle repair matrix chart	AT–17 ★ AT–2 –
No down–shift (O/D → 3rd)	1. Electrical control system check 2. Throttle valve 3. Down shift plug 4. Detent regulator valve 5. 3rd coast shift valve 6. 3–4 shift valve	AT–2 ★ ★ ★ ★ ★
No down–shift (3rd → 2nd)	1. Throttle valve 2. Down shift plug 3. Detent regulator valve 4. 2–3 shift valve	★ ★ ★ ★
No down–shift (2nd → 1st)	1. 1. Throttle valve 2. Down shift plug 3. Detent regulator valve 4. 1–2 shift valve	★ ★ ★ ★
Shift point too high or too low	1. Governor valve 2. Primary regulator valve 3. Throttle valve 4. 1–2 shift valve 5. 2–3 shift valve 6. 3–4 shift valve	AT–17 ★ ★ ★ ★ ★
Up–shift 3rd → O/D with O/D main switch OFF	1. Parking lock pawl 2. 3rd coast shift valve	AT–26 ★
Harsh engagement (N → R)	1. C_2 accumulator 2. Reverse clutch sequence valve 3. Off–vehicle repair matrix chart	★ ★ –
Harsh engagement (N → D)	1. C_1 accumulator 2. Off–vehicle repair matrix chart	★ –

Harsh engagement (N → L)	1. 1–2 shift valve 2. Low coast shift valve 3. Off–vehicle repair matrix chart	★ ★ –
Harsh engagement (1st → 2nd "D" position)	1. B_2 accumulator 2. Off–vehicle repair matrix chart	★ –
Harsh engagement (1st → 2nd "2" position)	1. B_2 accumulator 2. Intermediate shift valve 3. Off–vehicle repair matrix chart	★ ★ –
Harsh engagement (1st → 2nd → 3rd → O/D)	1. Throttle valve 2. Primary regulator valve	★ ★
Harsh engagement (2nd → 3rd)	1. C_2 accumulator 2. Off–vehicle repair matrix chart	★ –
Harsh engagement (3rd → O/D)	1. Off–vehicle repair matrix chart	–
Harsh engagement (O/D → 3rd)	1. Off–vehicle repair matrix chart	–
Harsh engagement (3rd → 2nd)	1. C_2 accumulator 2. Off–vehicle repair matrix chart	★ –
Slip (Forward & Reverse)	1. Primary regulator valve 2. Off–vehicle repair matrix chart	★ –
Slip "R" position	1. Off–vehicle repair matrix chart	–
Slip (1st)	1. Off–vehicle repair matrix chart	–
Slip (2nd)	1. Off–vehicle repair matrix chart	–
Slip (3rd)	1. Off–vehicle repair matrix chart	–
Slip (O/D)	1. Off–vehicle repair matrix chart	–
No engine braking (1st "L" position)	1. Off–vehicle repair matrix chart	–
No engine braking (2nd "2" position)	1. Off–vehicle repair matrix chart	–
No kick–down	1. Throttle valve 2. Down shift plug 3. Detent regulator valve 4. 1–2 shift valve 5. 2–3 shift valve 6. 3–4 shift valve	★ ★ ★ ★ ★ ★
Poor acceleration	1. Off–vehicle repair matrix chart	–

OFF–VEHICLE:

Symptom	Suspect Area	See page
Does not move in any forward position	1. Front clutch (C_1)	★
Does not move in reverse position	1. Rear clutch (C_2) 2. No.3 brake (B_3)	★ ★
Does not move in any forward position or reverse position	1. Torque converter clutch 2. Oil pump 3. O/D direct clutch (C_0) 4. O/D one–way clutch (F_0) 5. Front planetary gear 6. Rear planetary gear	AT–35 ★ ★ ★ ★ ★
No–up shift (1st → 2nd)	1. No.2 brake (B_2) 2. No.1 one–way clutch (F_1)	★ ★
No–up shift (2nd → 3rd)	1. Rear clutch (C_2)	★
No–up shift (3rd → O/D)	1. O/D brake (B_0)	★
Harsh engagement (N → R)	1. Rear clutch (C_2) 2. No.3 brake (B_3)	★ ★

Harsh engagement (N → D)	1. Front clutch (C_1)	★
Harsh engagement (N → L)	1. No.3 brake (B_3)	★
Harsh engagement (1st → 2nd "D" position)	1. No.2 brake (B_2)	★
Harsh engagement (1st → 2nd "2" position)	1. No.1 brake (B_1) 2. No.2 brake (B_2)	★ ★
Harsh engagement (2nd → 3rd)	1. Rear clutch (C_2)	★
Harsh engagement (3rd → O/D)	1. O/D brake (B_0)	★
Harsh engagement (O/D → 3rd)	1. O/D direct clutch (C_0)	★
Harsh engagement (3rd → 2nd)	1. No.2 brake (B_2)	★
Slip (Forward & Reverse)	1. O/D direct clutch (C_0) 2. Torque converter clutch 3. Oil pump 4. O/D one–way clutch (F_0)	★ AT–35 ★ ★
Slip ("R" position)	1. O/D direct clutch (C_0) 2. Rear clutch (C_2) 3. No.3 brake (B_3) 4. O/D one–way clutch (F_0)	★ ★ ★ ★
Slip (1st)	1. O/D direct clutch (C_0) 2. Front clutch (C_1) 3. O/D one–way clutch (F_0) 4. No.2 one–way clutch (F_2)	★ ★ ★ ★
Slip (2nd)	1. O/D direct clutch (C_0) 2. Front clutch (C_1) 3. No.2 brake (B_2) 4. O/D one–way clutch (F_0) 5. No.1 one–way clutch (F_1)	★ ★ ★ ★ ★
Slip (3rd)	1. O/D direct clutch (C_0) 2. Front clutch (C_1) 3. Rear clutch (C_2) 4. No.2 brake (B_2) 5. O/D one–way clutch (F_0)	★ ★ ★ ★ ★
Slip (O/D)	1. Front clutch (C_1) 2. Rear clutch (C_2) 3. O/D brake (B_0)	★ ★ ★
No engine brake (1st "L" position)	1. No.3 brake (B_3)	★
No engine brake (2nd "2" position)	1. No.1 brake (B_1)	★
Poor acceleration	1. Torque converter clutch	AT–35

AT0YU–01

TROUBLESHOOTING

1. GENERAL INFORMATION

(a) Troubles occurring with the automatic transmission can be caused by either the engine, electrical control or the transmission itself. These 3 areas should be distinguished before proceeding with troubleshooting.

(b) Troubleshooting should begin with the simplest operation, working up in order of difficulty, but first determine whether the trouble lies within the engine, electrical control or transmission.

(c) Proceed with the inspection as follows:

PRELIMINARY CHECK

(a) Check the tire inflation.
(b) Check the idle speed.
(c) Check the fluid level and fluid condition.
(d) Check the throttle cable mark.
(e) Check the shift linkage.
(f) Check the park/neutral position switch.

↓

STALL TEST

Check the engine and torque converter clutch.

↓

TIME LAG TEST

Check the automatic transmission (each clutch, brake and gear) for wear.

↓

HYDRAULIC TEST

Measure the line pressure and make a basic check of fluid circuit.

↓

ROAD TEST

Check that if trouble lies within the automatic transmission. If noisy or vibrating, the possible cause could be with the engine, drive shaft, tires, etc.

↓

SYMPTOM PROBLEM TABLE

2. PRELIMINARY CHECK

(a) Check the fluid level.

HINT:

- Drive the vehicle so that the engine and transmission are at the normal operating temperature.
  ATF temperature: 70 – 80 ˚C (158 – 176 ˚F)
- Only use the COOL range on the dipstick as a rough reference when the fluid is replaced or the engine does not run.
  (1) Park the vehicle on a level surface and set the parking brake.
  (2) With the engine idling and the brake pedal depressed, shift the shift lever into all positions from the P to L position and return to the P position.
  (3) Pull out the oil level gauge and wipe it clean.
  (4) Push it back fully into the pipe.

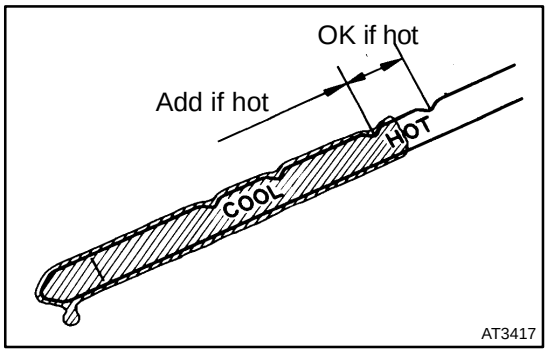

(5) Pull it out and check that the fluid level is in the HOT range. If the level is not within the HOT range, add new ATF.

Fluid type: ATF D–II or DEXRON®III (DEXRON®II)

NOTICE:

Do not overfill.

(b) Check the fluid condition.

If the fluid smells burnt or is black, replace it.

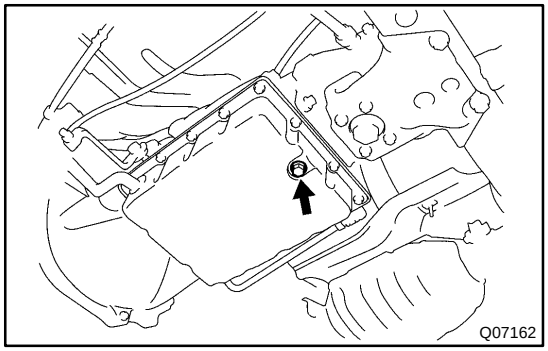

(c) Replace the ATF.
(1) Using a hexagon wrench, remove the drain plug and drain the ATF.
(2) Using a hexagon wrench, install the drain plug securely.
(3) Add new ATF through the filler pipe.

Fluid type: ATF D–II or DEXRON®III (DEXRON®II)
Capacity:
Dry fill: 6.5 liters (6.9 US qts, 5.7 lmp.qts)
Drain and refill: 2.4 liters (2.5 US qts, 2.1 lmp.qts)

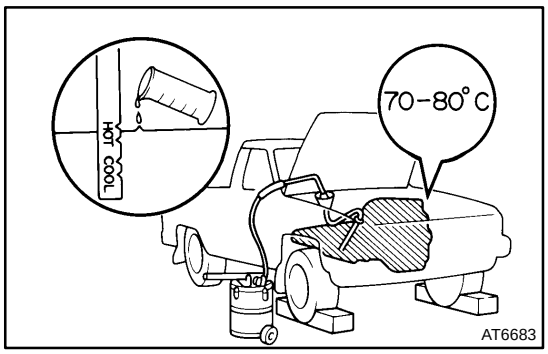

(4) Start the engine and shift the shift lever into all positions from the P position through the L position and then shift it into the P position.
(5) With the engine idling, check the fluid level. Add fluid up to the COOL level on the dipstick.
(6) Check the fluid level at the normal operating temperature 70 – 80 °C (158 – 176 °F) and add as necessary.

NOTICE:
Do not overfill.

(d) Inspect and adjust the throttle cable.
(1) Fully depress the accelerator pedal and check that the throttle valve opens fully.

HINT:
If the throttle valve does not open fully, adjust the accelerator cable.

(2) Fully depress the accelerator.

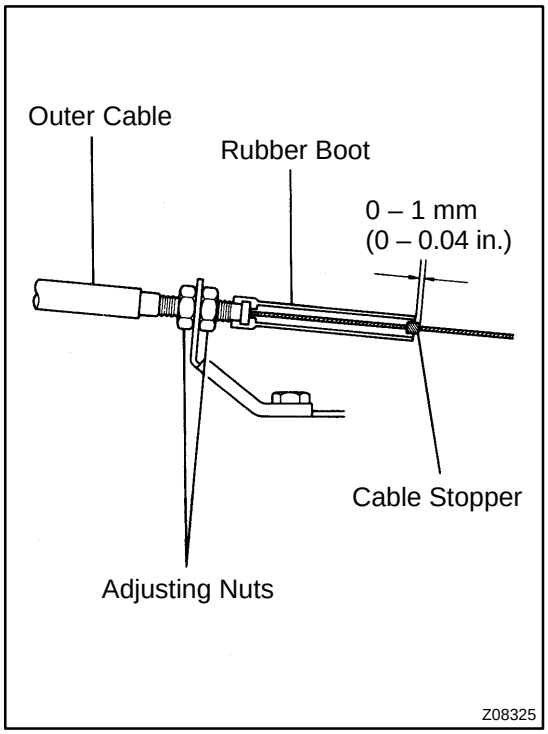

(3) Loosen the adjustment nuts.
(4) Adjust the outer cable so that the distance between the end of the boot and stopper on the cable is the standard.

Standard boot and cable stopper distance:
0 – 1 mm (0 – 0.04 in.)

(5) Tighten the adjusting nuts.
(6) Recheck the adjustment.

(e) Inspect the shift control cable.
When shifting the shift lever from the N position to other positions, check that the lever can be shifted smoothly and accurately to each position and that the position indicator correctly indicates the position.

If the indicator is not aligned with the correct position, carry out the following adjustment procedures.

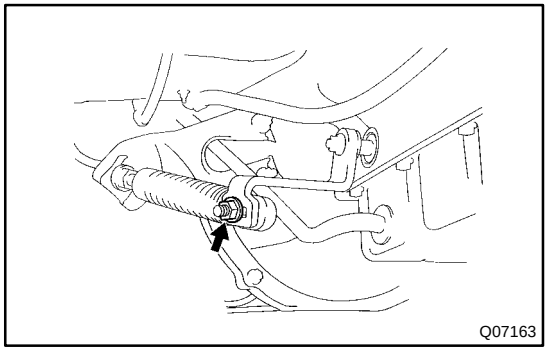

(f) Adjust the shift control cable.
(1) Loosen the nut on the control shaft lever. Push the control shaft lever fully rearward.
(2) Return the control shaft lever 2 notches to the N position.
(3) Set the shift lever to the N position.
(4) While holding the shift lever lightly toward the R position side, tighten the nut.

Torque: 13 N·m (130 kgf·cm, 9 ft·lbf)

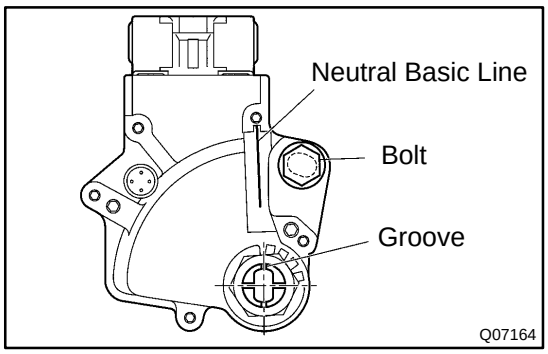

(g) Adjust the park/neutral position switch.

If the engine will start with shift lever in any position other than the N or P position, adjustment is required.

(1) Loosen the park/neutral position switch bolt and set the shift lever to the N position.
(2) Align the groove and neutral basic line.
(3) Hold in position and tighten the bolt.

Torque: 5.4 N·m (55 kgf·cm, 48 in.·lbf)

3. MEASURE STALL SPEED

The object of this test is to check the overall performance of the transmission and engine by measuring the maximum engine speeds in the D and R positions.

NOTICE:

- **Do the test at normal operating ATF temperature 50 – 80 °C (122 – 176 °F).**
- **Do not continuously run this test for longer than 5 seconds.**
- **To ensure safety, conduct this test in a wide, clear, level area which provides good traction.**

(1) Chock the 4 wheels.
(2) Fully apply the parking brake.
(3) Connect OBDII scan tool or TOYOTA hand–held tester to DLC3.
(4) Keep your left foot pressing firmly on the brake pedal, and start the engine.
(5) Shift into the D position. Fully depress the accelerator pedal with your right foot. Quickly read the stall speed at this time.

Stall speed: 2,250 ± 150 rpm

(6) Do the same test in the R position.

Stall speed: 2,250 ± 150 rpm

EVALUATION

Problem	Possible cause
(a) Stall speed low in D and R positions.	• Engine output may be insufficient • Stator one–way clutch is not operating properly HINT: If the engine speed is more than 600 rpm below the specified value, the torque converter clutch could be faulty.
(b) Stall speed high in D position.	• Line pressure too low • Forward clutch slipping • No.2 one–way clutch is not operating properly • O/D one–way clutch is not operating properly
(c) Stall speed high in R position.	• Line pressure too low • Rear clutch slipping • No.3 brake slipping • O/D one–way clutch is not operating properly
(d) Stall speed high in D and R positions.	• Line pressure too low • Improper fluid level • O/D one–way clutch is not operating properly

4. MEASURE TIME LAG

When the shift lever is shifted while the engine is idling, there will be a certain time lapse or lag before the shock can be felt. This is used for checking the condition of the O/D direct clutch, front clutch, rear clutch and No.3 brake.

NOTICE:

- **Do the test at normal operating ATF temperature 50 – 80 °C (122 – 176 °F).**
- **Make sure to allow 1 minute interval between tests.**
- **Perform measurement 3 times and take the average value.**

(1) Fully apply the parking brake.

(2) Start the engine and check the idle speed. (In N position and A/C OFF)

Idling speed: 700 ± 50 rpm

(3) Shift the shift lever from the N to D position. Using a stop watch, measure the time it takes from the shift lever is shifted until the shock is felt.

Time lag: Less than 1.2 seconds

(4) In the same way, measure the time lag for N → R.

Time lag: Less than 1.5 seconds

EVALUATION (If N → D or N → R time lag is longer than the specified):

Problem	Possible cause
N → D time lag is longer	• Line pressure too low • Front clutch worn • O/D one–way clutch is not operating properly
N → R time lag is longer	• Line pressure too low • Rear clutch worn • No.3 brake worn • O/D one–way clutch is not operating properly

5. HYDRAULIC TEST

(a) Measure the line pressure.

(1) Warm up the ATF.

(2) Remove the transmission case test plug and connect SST (See page AT–32).

SST 09992–00095 (09992–00112, 09992–00271)

NOTICE:

Do the test at normal operating ATF temperature 50 – 80 °C (122 – 176 °F).

(3) Chock the 4 wheels.

(4) Fully apply the parking brake.

(5) Start the engine and check the idle speed.

(6) Shift into the D position, keep your left foot pressing firmly on the brake pedal and while modulating the accelerator pedal with the right foot, measure the line pressure at the engine speeds specified in the table.

(7) In the same way, do the test in the R position.

Specified line pressure:

D position	Idling	441 – 500 kPa (4.5 – 5.1 kgf/cm^2, 64 – 73 psi)
	Stall	990 – 1,167 kPa (10.1 – 11.9 kgf/cm^2, 144 – 169 psi)
R position	Idling	667 – 745 kPa (6.8 – 7.6 kgf/cm^2, 97 – 108 psi)
	Stall	1,471 – 1,863 kPa (15.0 – 19.0 kgf/cm^2, 213 – 270 psi)

(8) If the measured pressures are not up to the specified values, recheck the throttle cable adjustment and retest.

EVALUATION

Problem	Possible cause
If the measured values at all positions are higher.	• Throttle cable out of adjustment • Throttle valve defect • Regulator valve defect
If the measured values at all positions are lower.	• Throttle cable out of adjustment • Throttle valve defect • Regulator valve defect • Oil pump defect • O/D direct clutch defect
If pressure is low in the D position only.	• D position circuit fluid leakage • Front clutch defect
If pressure is low in the R position only.	• R position circuit fluid leakage • Rear clutch defect • No.3 brake defect

(b) Measure the governor pressure.

(1) Warm up the ATF.

(2) Remove the transmission case test plug and connect SST (See page AT–32).

SST 09992–00095 (09992–00112, 09992–00271)

NOTICE:

Do the test at normal operating ATF temperature 50 – 80 °C (122 – 176 °F).

(3) Check the parking brake to see that it is not applied.

(4) Start the engine.

(5) Shift into the D position and measure the governor pressures at the speeds specified in the table.

EVALUATION

Problem	Possible cause
If governor pressure is defective.	• Line pressure defect • Fluid leakage in governor pressure circuit • Governor valve operation defect

Specified governor pressure:

Tire size: P205/75R15

Output shaft rpm	Vehicle speed (Reference)	Governor pressure
1,000	32 km/h (20 mph)	137 – 177 kPa (1.4 – 1.8 kgf/cm^2, 14 – 26 psi)
1,800	57 km/h (35 mph)	235 – 275 kPa (2.4 – 2.8 kgf/cm^2, 34 – 40 psi)
3,500	111 km/h (69 mph)	500 – 579 kPa (5.1 – 5.9 kgf/cm^2, 73 – 84 psi)

Tire size: P235/55R16

Output shaft rpm	Vehicle speed (Reference)	Governor pressure
1,000	32 km/h (20 mph)	137 – 177 kPa (1.4 – 1.8 kgf/cm^2, 14 – 26 psi)
1,800	58 km/h (36 mph)	235 – 275 kPa (2.4 – 2.8 kgf/cm^2, 34 – 40 psi)
3,500	113 km/h (70 mph)	500 – 579 kPa (5.1 – 5.9 kgf/cm^2, 73 – 84 psi)

6. ROAD TEST

NOTICE:

Do this test at normal operating ATF temperature 50 – 80 ˚C (122 – 176 ˚F).

(a) D position test.

Shift into the D position and while driving with the accelerator pedal held constantly with the throttle valve fully open and the O/D main switch ON, check on the following points.

(1) 1 → 2, 2 → 3 and 3 → O/D up–shifts take place and also that the shift points conform to those shown in the automatic shift schedule (See page SS–50).

HINT:

3 → O/D up–shift does not take place with a throttle valve opening of more than 86% or engine coolant temperature below 55˚C (122˚F).

EVALUATION

Problem	Possible cause
If there is no 1 – 2 up–shift.	• Governor valve is defective • 1 – 2 shift valve is stuck
If there is no 2 – 3 up–shift.	• 2 – 3 shift valve is stuck
If there is no 3–O/D up–shift (throttle valve opening less than 86%)	• 3 – 4 shift valve is stuck • Solenoid valve or circuit defective
If the shift point is defective.	• Throttle cable out of adjustment • Throttle valve, 1 – 2 shift valve, 2 – 3 shift valve, 3 – 4 shift valve etc. are defective

(2) In the same way, check the shock and slip at 1 → 2, 2 → 3 and 3 → O/D up–shifts.

EVALUATION

Problem	Possible cause
If the shock is excessive.	• Line pressure is too high • Accumulator is defective

(3) Run in the 3rd gear or O/D of the D position and check for abnormal noise and vibration.

HINT:

This check must be made with extreme care as noise and vibration could also be due to imbalance in the propeller shaft, differential, tires, and torque converter clutch, etc.

(4) While running in the 2nd, 3rd and O/D gears of the D position, check that the possible vehicle speed limits for 2 → 1, 3 → 2 and O/D → 3 kick–downs conform to those indicated on the automatic shift schedule (See page SS–50).

HINT:

O/D → 3 kick–down is always possible with a throttle valve opening of more than 86%.

(5) Check the abnormal shock and slip at kick–down.

(b) 2 position test.

Shift into the 2 position and check on the following points while driving with the accelerator pedal held constantly at the fully throttle valve opening position.

(1) Check to see that the 1→2 up–shift takes place and that the shift point conforms to that shown on the automatic shift schedule (See page SS–50).

(2) While running in the 2 position of the 2 nd gear, release the accelerator pedal and check the engine braking effect.

EVALUATION

Problem	Possible cause
If these is no engine braking effect.	• No.1 brake is defective.

(3) Check for abnormal noise during acceleration and deceleration.

(4) Check the shock during up–shift and down–shift.

(c) L position test.

(1) While running in the L position, check that there is no up–shift to 2nd gear.

(2) While running in the L position, release the accelerator pedal and check the engine braking effect.

EVALUATION

Problem	Possible cause
If these is no engine braking effect.	• No.3 brake is defective.

(3) Check for abnormal noise during acceleration and deceleration.

(d) R position test.

Shift into the R position and check for slipping while starting at wide open throttle.

CAUTION:

Before conducting this test, ensure that the test area is free from personnel and obstruction.

(e) P position test.

Stop the vehicle on a gradient (more than 5°) and after shifting into the P position, release the parking brake. Then check that the parking lock pawl holds the vehicle in place.

7. ELECTRIC CONTROL SYSTEM

LOCATION

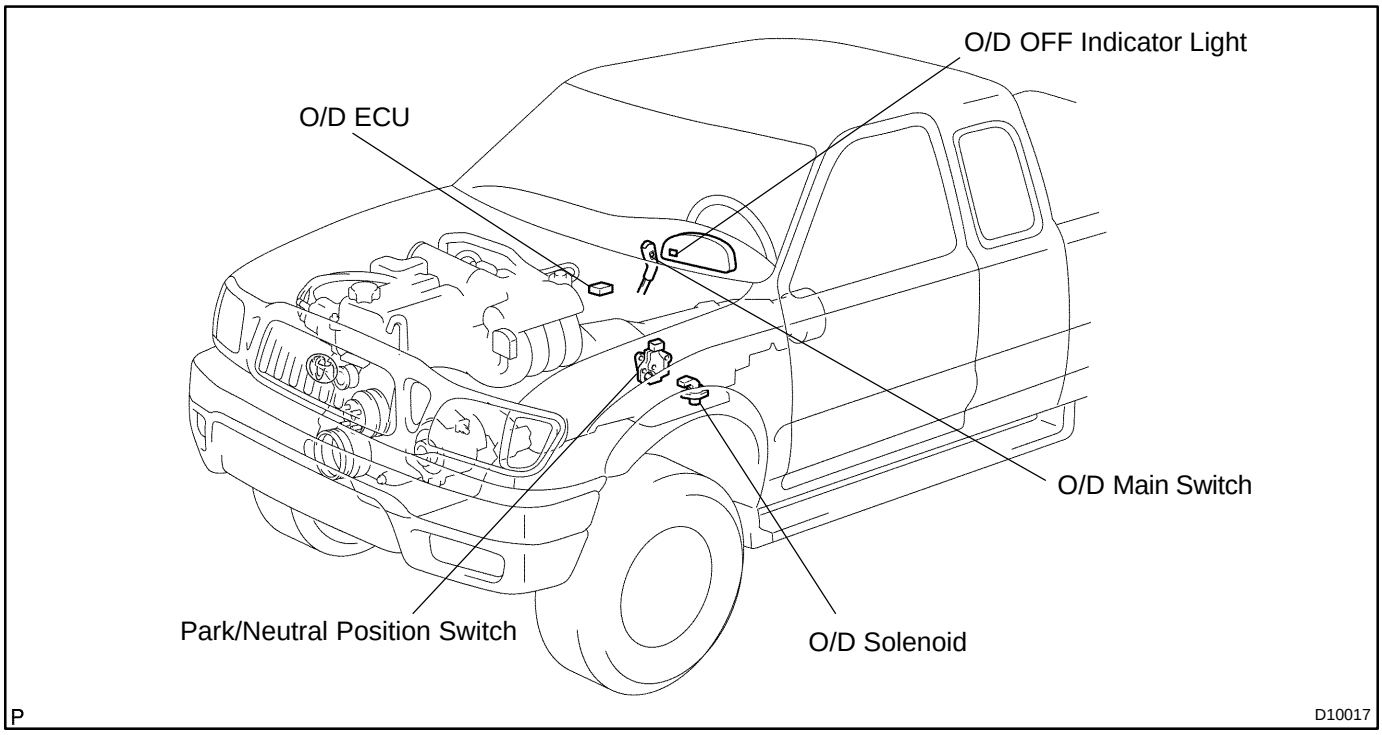

CIRCUIT

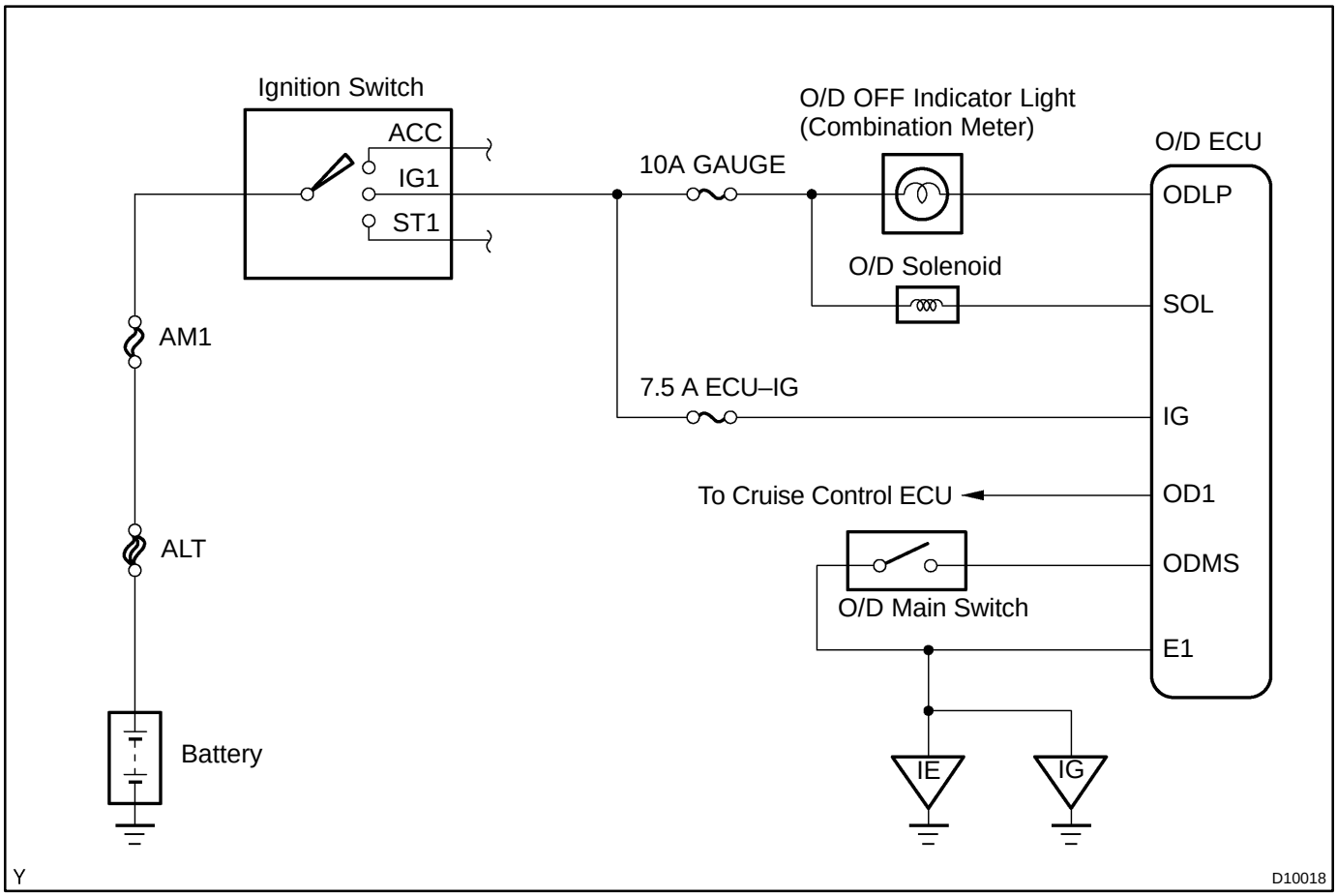

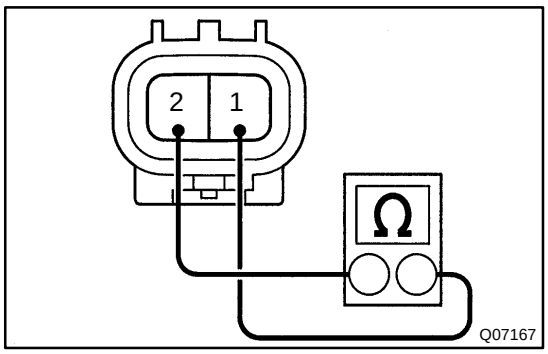

(a) Inspect the O/D solenoid.
(1) Using an ohmmeter, measure the resistance between terminals.
Resistance: 11 – 15 Ω

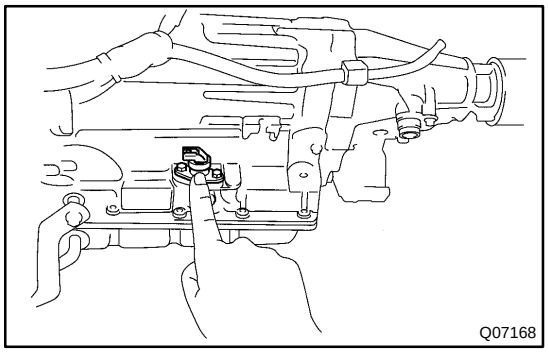

(2) Apply battery positive voltage to the solenoid. Check that the solenoid operation sound is heard.

If operation is not as specified, replace the solenoid.

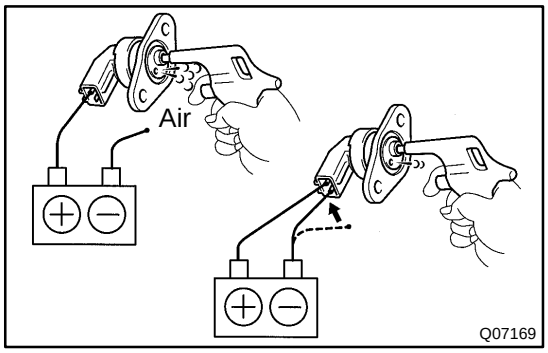

(b) Check the solenoid seals.
If there is foreign material in the solenoid valve, the fluid will not be controlled even with solenoid operation.
(1) Check that the solenoid valve opens when low–pressure compressed air is applied.
(2) When supplying battery positive voltage to the solenoid, check that the solenoid valve does not leak air.

If there is an air leak, replace the solenoid.

(c) Inspect the O/D OFF indicator light.
(1) Turn on the ignition switch.
(2) Check that the O/D OFF indicator light does not light, when the O/D main switch is turned ON.
(3) Check that the O/D OFF indicator lights, when the O/D main switch is turned OFF.

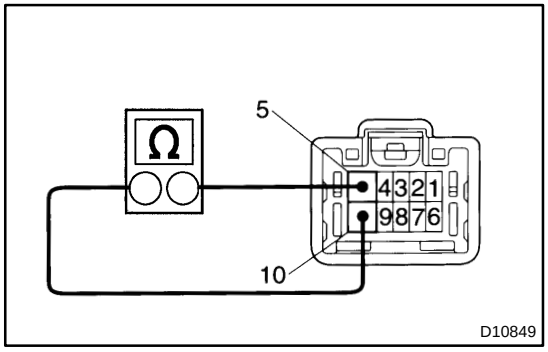

(d) Inspect the O/D main switch.
(1) Remove the lower finish panel.
(2) Using an ohmmeter, check the continuity of the terminals for each switch position.

Switch position	Tester connection	Specified value
ON	5 – 10	Continuity
OFF	5 – 10	No continuity

If continuity is not as specified, replace the switch.

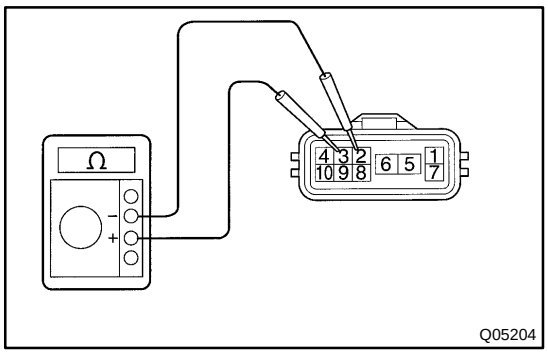

(e) Inspect the park/neutral position switch.
Inspect that there is continuity between each terminals.

Shift position	Terminal No. continuity	
P	6 – 5	4 – 7
R	4 – 8	–
N	6 – 5	4 – 10
D	4 – 9	–
2	4 – 2	–
L	4 – 3	–

If continuity is not as specified, replace the switch.

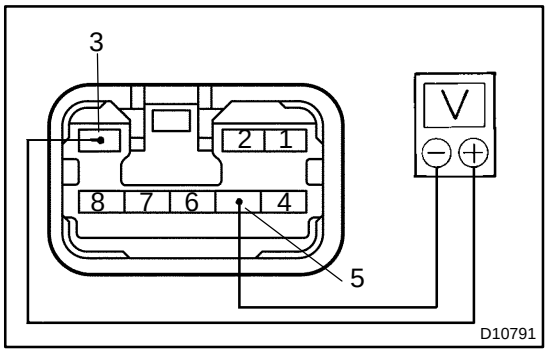

(f) Inspect the O/D ECU.
(1) Turn the IG witch ON.
(2) Using voltmeter, check the voltage between terminals 3 and 5.
Standard voltage: 10 – 16 V

If voltage is not within specified, check for open in harness and connector between terminal 3 and IG switch.

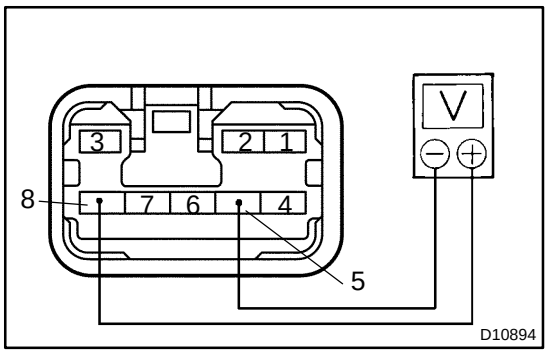

(3) Using voltmeter, check the voltage between terminals 8 and 5.
Standard voltage:

O/D main switch	Voltage
Kept pressing	0 – 2 V
Released	10 – 16 V

If voltage is not as specified, check for open or short in harness and connector between terminal 8 and O/D main switch.

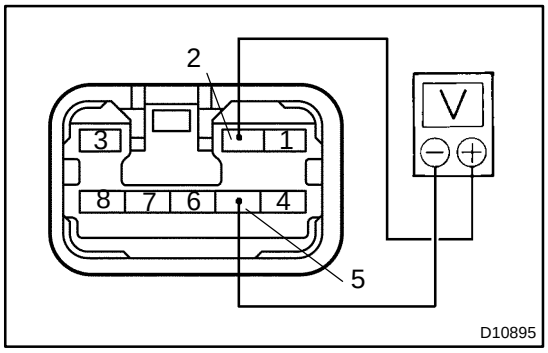

(4) Whenever the O/D main switch pressed, check that the out put voltage alternates between 10 – 16 V and 0 – 2 V.

If voltage is not as specified, check for open or short in harness and connector between terminal 2 and O/D solenoid.
If wire harness is correct replace the O/D solenoid.

(5) Turn the IG witch OFF.

AUTOMATIC TRANSMISSION UNIT

AT01K–01

COMPONENTS

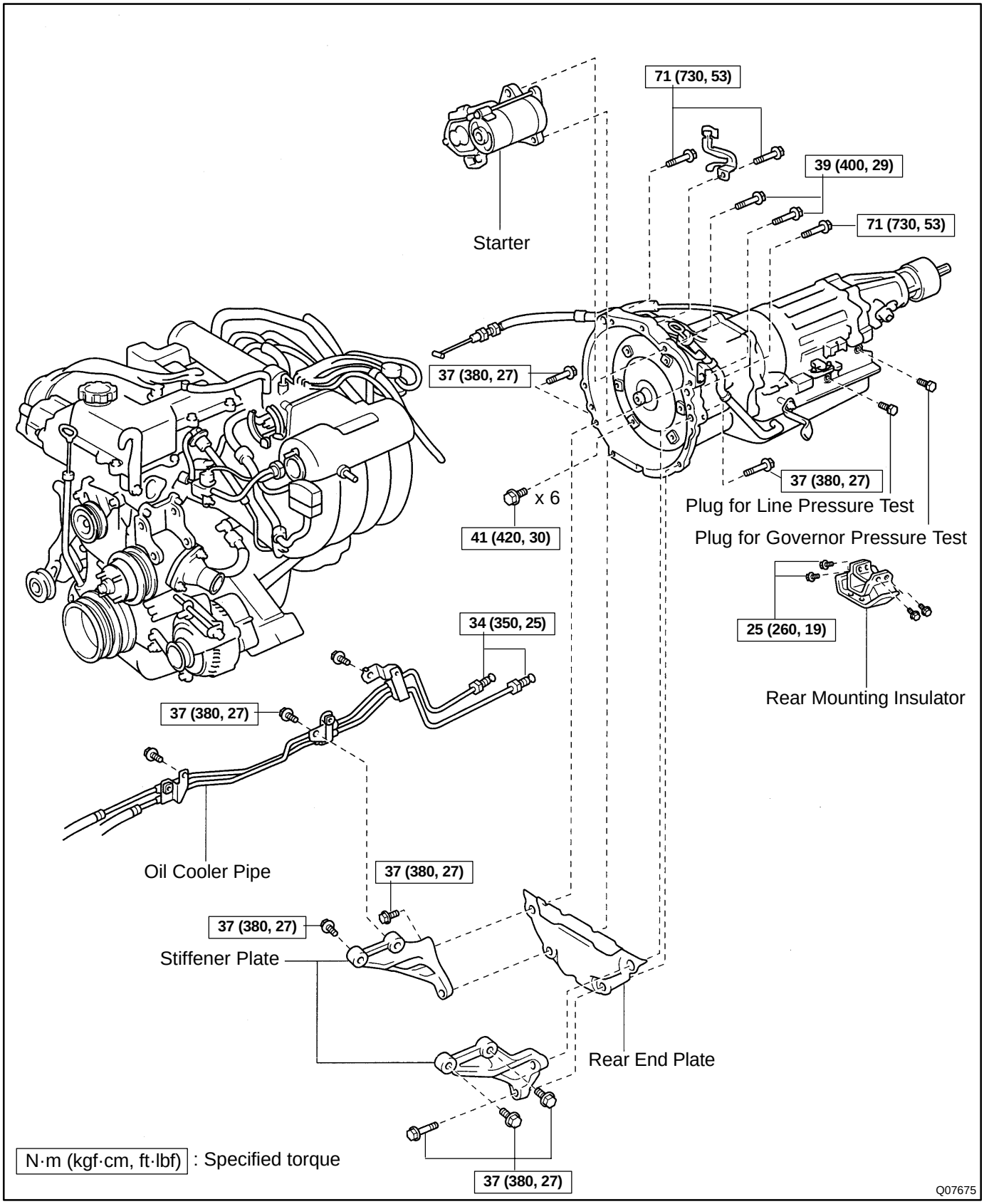

AT01M–03

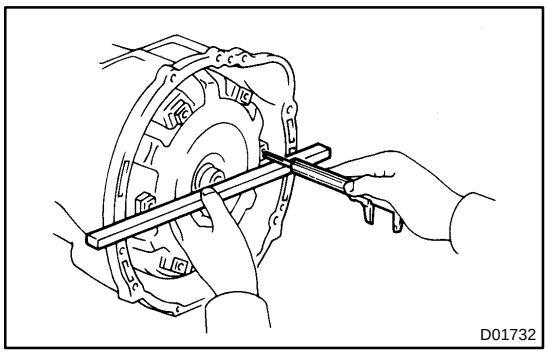

INSTALLATION

1. CHECK TORQUE CONVERTER CLUTCH INSTALLATION

Using calipers and a straight edge, measure the distance from the installed surface of the transmission housing to the installed surface of the torque converter housing.

Correct distance: More than 31.75 mm (1.2500 in.)

2. INSTALL TRANSMISSION

Installation is in the reverse order of removal. (See page AT–33)

HINT:

- After installation, adjust the shift lever position and throttle cable (See page AT–2).
- Fill and check fluid lever (See page AT–2).

AT01L–02

REMOVAL

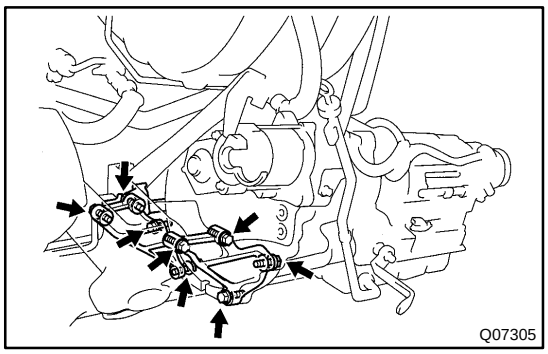

1. REMOVE TRANSMISSION WITH ENGINE (See page EM–65)

2. REMOVE LEFT AND RIGHT SIDE STIFFENER PLATES

(a) Remove the 8 bolts, 2 stiffener plates and rear end plate.
Torque: 37 N·m (380 kgf·cm, 27 ft·lbf)

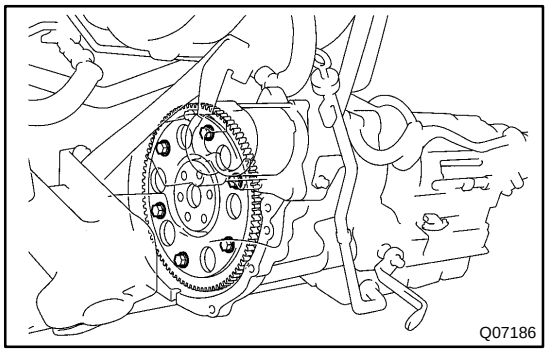

(b) Turn the crankshaft to gain access and remove the 6 bolts with holding the crankshaft pulley set bolt with a wrench.
Torque: 41 N·m (420 kgf·cm, 30 ft·lbf)

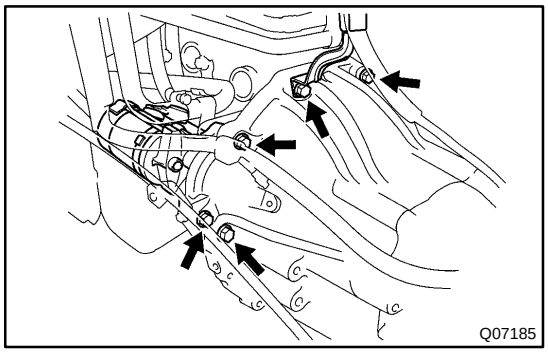

3. REMOVE STARTER

Remove the 2 bolts and starter.
Torque: 39 N·m (400 kgf·cm, 29 ft·lbf)

4. REMOVE TRANSMISSION FROM ENGINE

(a) Remove the 3 transmission mounting bolts from the engine.
Torque: 71 N·m (730 kgf·cm, 53 ft·lbf)

(b) Pull out the transmission toward the rear.

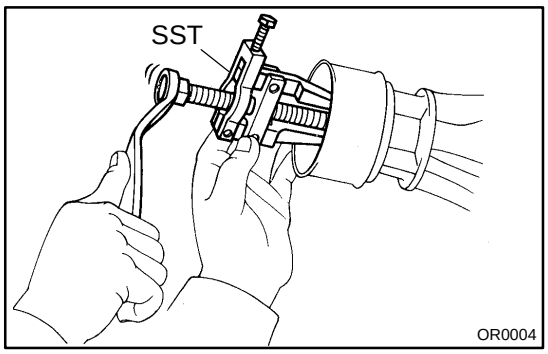

EXTENSION HOUSING OIL SEAL

AT01B–03

ON–VEHICLE REPAIR

1. REMOVE PROPELLER SHAFT (See page PR–3)

2. REMOVE REAR OIL SEAL

Using SST, remove the oil seal.

SST 09308–10010

NOTICE:

Clean the extension housing before removing the oil seal.

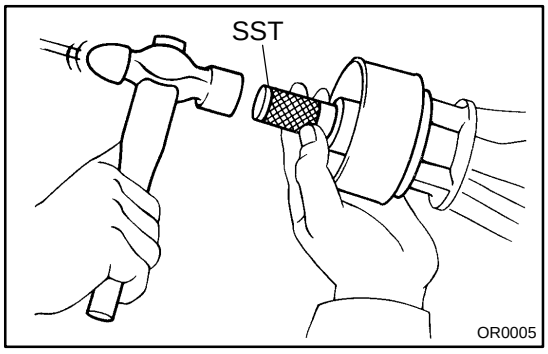

3. INSTALL NEW OIL SEAL

Coat the lip of a new oil seal with MP grease and using SST and a hammer, carefully drive the oil seal in as far as it will go.

SST 09325–20010

4. INSTALL PROPELLER SHAFT (See page PR–8)

5. CHECK FLUID LEVEL (See page AT–2)

GOVERNOR BODY

AT01C–04

ON–VEHICLE REPAIR

1. **REMOVE PROPELLER SHAFT (See page PR–3)**
2. **DISCONNECT VEHICLE SPEED SENSOR CONNECTOR AND REMOVE VEHICLE SPEED SENSOR (See page AT–21)**

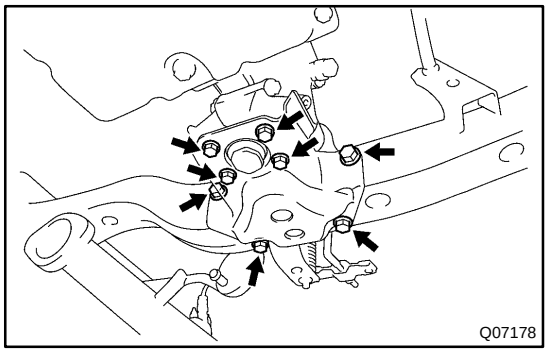

3. **REMOVE REAR MOUNTING BRACKET FROM REAR SUPPORT MEMBER**

Remove the 8 bolts and rear mounting bracket from the rear support member.

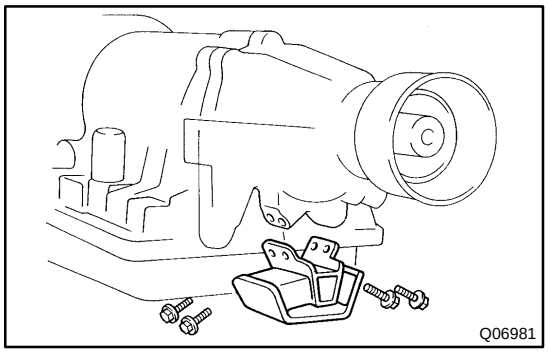

4. **REMOVE REAR MOUNTING INSULATOR FROM EXTENSION HOUSING**

Remove the 4 bolts and rear mounting insulator from the extension housing.

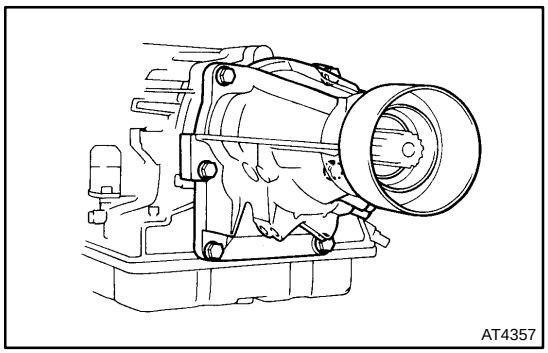

5. **REMOVE EXTENSION HOUSING**

(a) Remove the 6 bolts, housing and gasket.

If necessary, tap the extension housing with a plastic hammer or block of wood to loosen it.

(b) Remove the gasket and oil apply pipe from the extension housing.

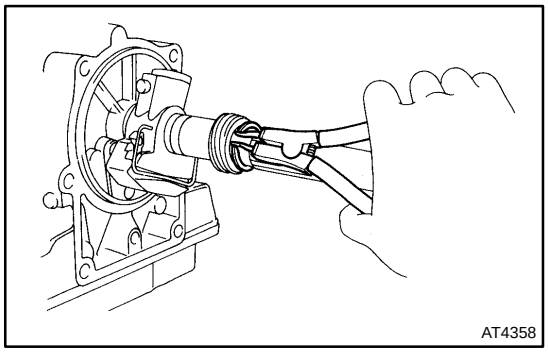

6. **REMOVE VEHICLE SPEED SENSOR DRIVE GEAR**

(a) Using snap ring pliers, remove the snap ring.

(b) Slide off the vehicle speed sensor drive gear.

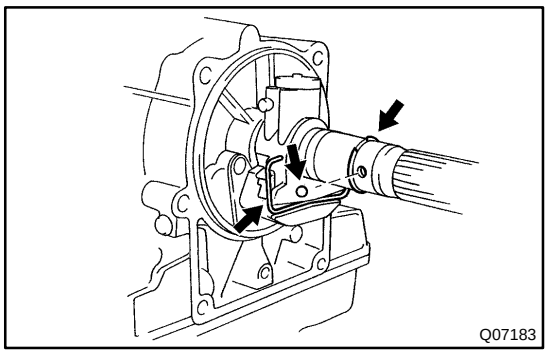

(c) Remove the lock ball and snap ring.

7. REMOVE GOVERNOR BODY FROM OUTPUT SHAFT

(a) Using a large screwdriver, remove the retaining clip.

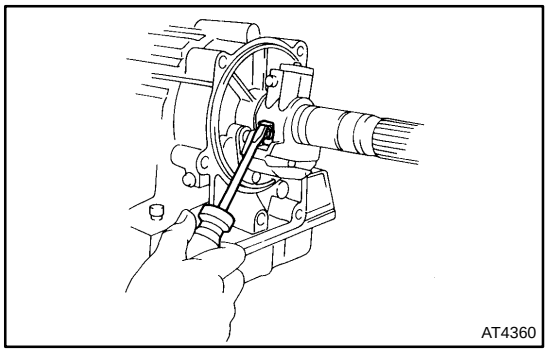

(b) Using a screwdriver unstake the lock plate, and remove the bolt and lock plate.

(c) Remove the governor body from the output shaft.

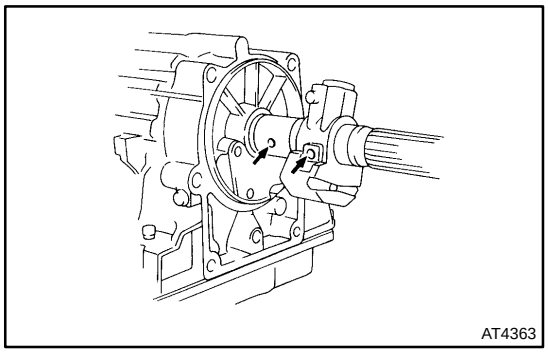

8. INSTALL GOVERNOR BODY TO OUTPUT SHAFT

(a) Place the governor body on the output shaft.

HINT:

Align the governor body and bolt hole on the output shaft.

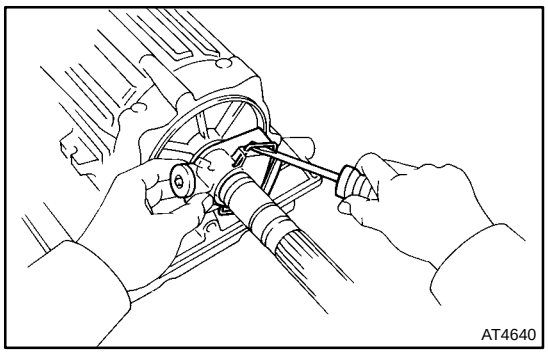

(b) While lifting the retaining clip with a screwdriver, slide the governor body and insert the retaining clip end into the hole on the output shaft.

(c) Install a new lock plate with the bolt.

Torque: 3.9 N·m (40 kgf·cm, 35 in.·lbf)

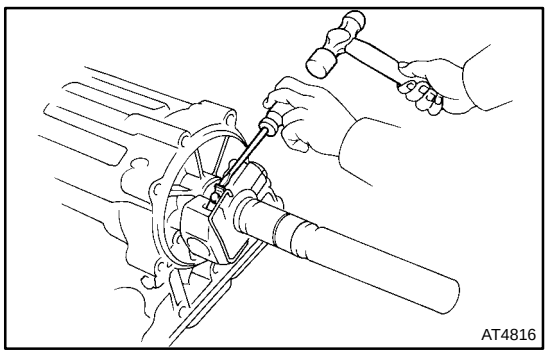

(d) Stake the lock plate.

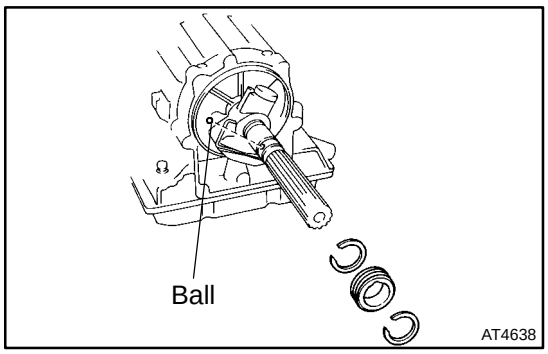

9. INSTALL VEHICLE SPEED SENSOR DRIVE GEAR

(a) Using a snap ring expander, install the snap ring.
(b) Install the ball into the hole on the output shaft.
(c) Align the groove of the drive gear with the ball, and install the drive gear.
(d) Using a snap ring expander, install the snap ring.

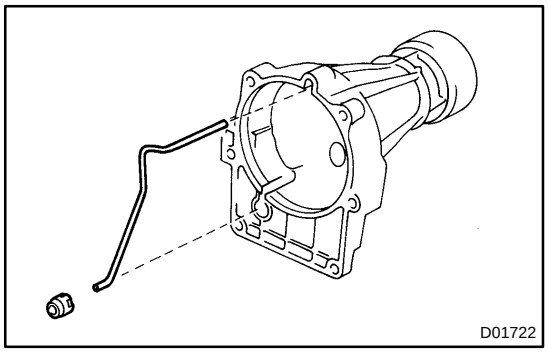

10. INSTALL EXTENSION HOUSING

(a) Install the oil apply tube and a new gasket to the extension housing.
(b) Install the extension housing with a new gasket to the case.
(c) Apply sealant to the bolts.
Sealant:
Part No. 08833–00080, THREE BOND 1344, LOCTITE 242 or equivalent

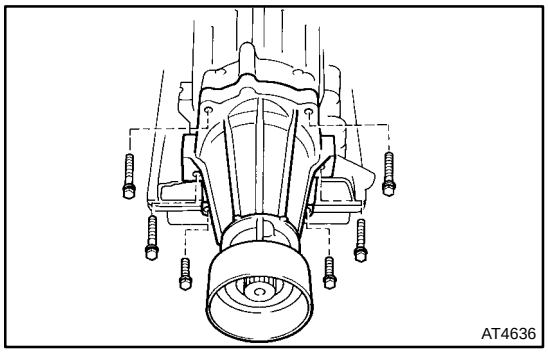

(d) Tighten the 6 bolts.
Torque: 36 N·m (370 kgf·cm, 27 ft·lbf)

HINT:
The 2 lower bolts are shorter.

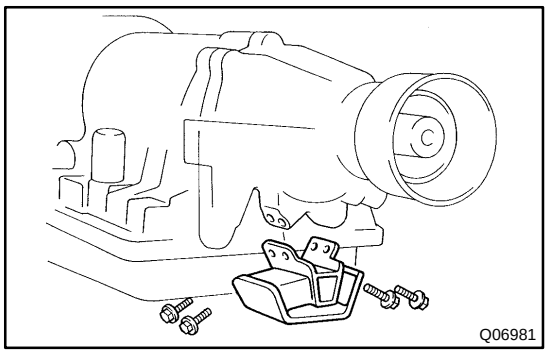

11. INSTALL REAR MOUNTING INSULATOR TO EXTENSION HOUSING

Install the rear mounting insulator to the extension housing with the 4 bolts.
Torque: 25 N·m (260 kgf·cm, 19 ft·lbf)

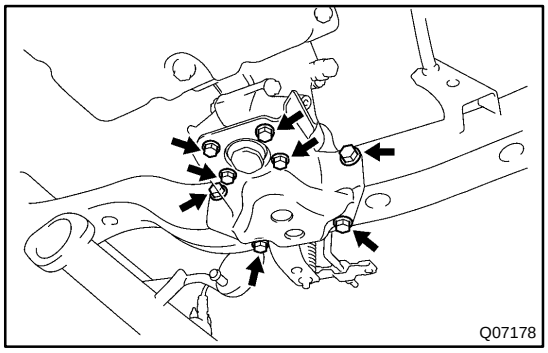

12. INSTALL ENGINE REAR MOUNTING BRACKET TO REAR SUPPORT MEMBER

Install the rear mounting bracket to the rear support member with the 8 bolts.
Torque:
Rear mounting side: 18 N·m (185 kgf·cm, 13 ft·lbf)
Frame side: 58 N·m (590 kgf·cm, 42 ft·lbf)

13. **INSTALL VEHICLE SPEED SENSOR AND CONNECT SPEED SENSOR CONNECTOR (See page AT–21)**
14. **INSTALL PROPELLER SHAFT (See page PR–8)**

PARKING LOCK PAWL

AT01G–03

ON–VEHICLE REPAIR

1. **REMOVE DRAIN PLUG AND DRAIN ATF**
2. **REMOVE VALVE BODY (See page AT–23)**

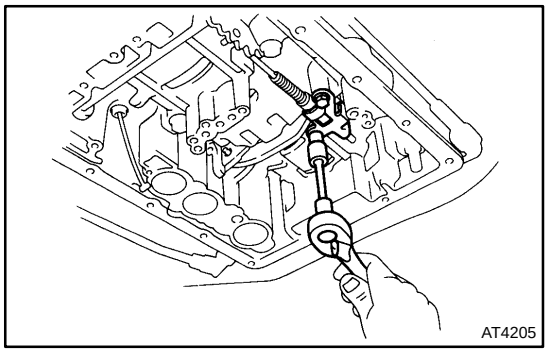

3. **REMOVE PARKING LOCK PAWL BRACKET**

Remove the 2 bolts, wave washers and parking lock pawl bracket.

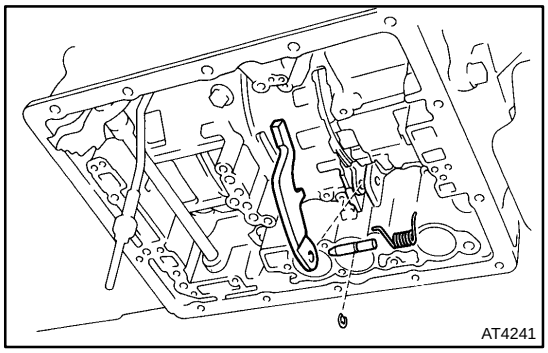

4. **REMOVE PARKING LOCK PAWL**

(a) Remove the spring from parking lock pawl pivot pin.
(b) Remove the pivot pin and parking lock pawl.
(c) Remove the E–ring from the pivot pin.

5. **INSTALL PARKING LOCK PAWL**

(a) Install the E–ring to the pivot pin.
(b) Install the parking lock pawl, pivot pin and spring.

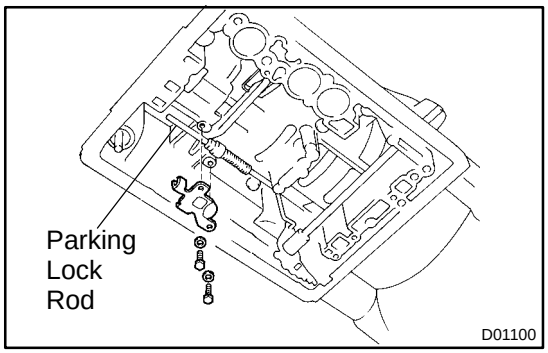

6. **INSTALL PARKING LOCK PAWL BRACKET**

Install the bracket and tighten the 2 bolts with the wave washers.

Torque: 7.4 N·m (75 kgf·cm, 65 in.·lbf)

HINT:
Push the parking lock rod fully forward.

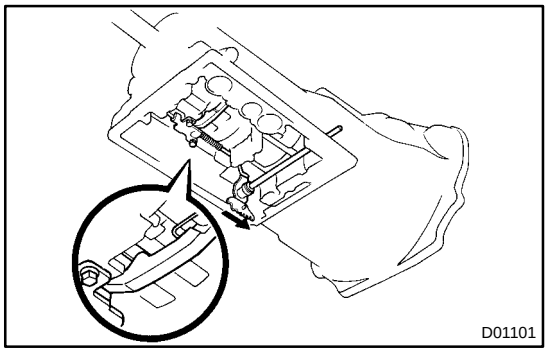

7. **CHECK PARKING LOCK PAWL OPERATION**

Shift the manual valve lever to the P position, and check the planetary ring gear is correctly locked up by the lock pawl.

8. **INSTALL VALVE BODY (See page AT–23)**
9. **INSTALL DRAIN PLUG**

Torque: 20 N·m (205 kgf·cm, 15 ft·lbf)

10. **FILL ATF AND CHECK FLUID LEVEL (See page AT–2)**

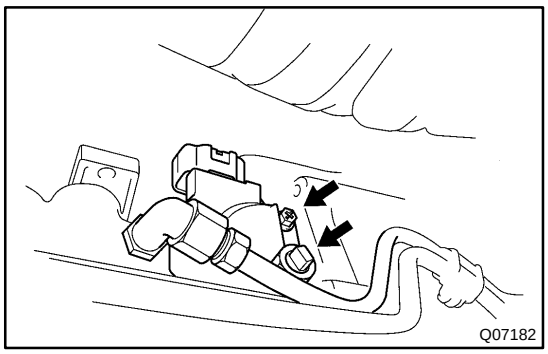

PARK/NEUTRAL POSITION (PNP) SWITCH

AT01E–03

ON–VEHICLE REPAIR

1. REMOVE FRONT EXHAUST PIPE AND HEAT INSULATOR

2. DISCONNECT OIL COOLER PIPE

(a) Remove the 3 oil cooler pipe clamps.

(b) Disconnect the oil cooler pipe.

3. REMOVE ELBOW AND O–RING

4. REMOVE PARK/NEUTRAL POSITION SWITCH

(a) Disconnect the connector.

(b) Pry off the lock washer and remove the nut.

(c) Remove the bolt and park/neutral position switch.

5. INSTALL PARK/NEUTRAL POSITION SWITCH

(a) Install the park/neutral position switch and bolt.
Torque: 5.4 N·m (55 kgf·cm, 48 in.·lbf)

(b) Install a new lock plate and the nut.
Torque: 3.9 N·m (40 kgf·cm, 35 in.·lbf)

(c) Bend claws on the lock plate to fix the nut.

(d) Adjust the park/neutral position switch (See page AT–2).

(e) Connect the connector.

6. INSTALL ELBOW AND NEW O–RING
Torque: 34 N·m (350 kgf·cm, 25 ft·lbf)

7. CONNECT OIL COOLER PIPES

(a) Connect the oil cooler pipe.
Torque: 34 N·m (350 kgf·cm, 25 ft·lbf)

(b) Install the 3 oil cooler pipe clamps.

8. INSTALL FRONT EXHAUST PIPE AND HEAT INSULATOR

AT01J–03

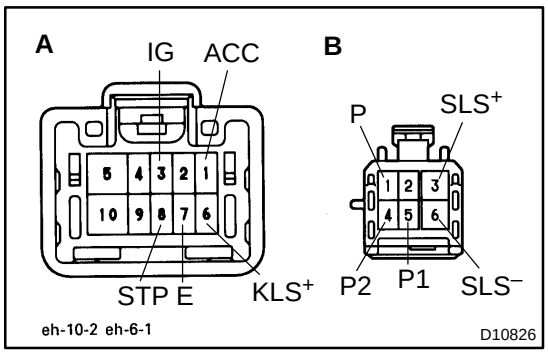

INSPECTION

1. INSPECT SHIFT LOCK CONTROL ECU

Using a voltmeter, measure the voltage at each terminal.

HINT:

Do not disconnect the ECU connector.

Terminal (Symbols)	Measuring Condition	Voltage (V)
A1 (ACC) – A7 (E)	Ignition switch ACC	10 – 14
A3 (IG) – A7 (E)	Ignition switch ON	10 – 14
A8 (STP) – A7 (E)	Depress brake pedal	10 – 14
A6 (KLS+) – A7 (E)	1. Ignition switch ACC and P position	0
	2. R, N, D, 2, L position	7.5 – 11
	3. R, N, D, 2, L position (After–approx. 1 second)	6 – 9.5
B3 (SLS+) – B6 (SLS–)	1. Ignition switch ON and P position	0
	2. Depress brake pedal	8 – 13.5
	3. Depress brake pedal (After–approx. 20 seconds)	6 – 8.5
	4. R, N, D, 2, L position	0
B5 (P1) – B1 (P)	1. Ignition switch ON, P position and depress brake pedal	0
	2. R, N, D, 2, L position	9 – 13.5
B4 (P2) – B1 (P)	1. Ignition switch ACC and P position	9 – 13.5
	2. R, N, D, 2, L position	0

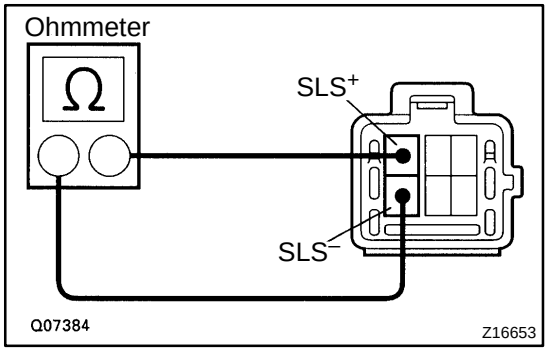

2. INSPECT SHIFT LOCK SOLENOID

(a) Disconnect the solenoid connector.

(b) Using an ohmmeter, measure the resistance at each terminal.

Standard resistance: 20 – 28 Ω

If resistance value is not as specified, replace the solenoid.

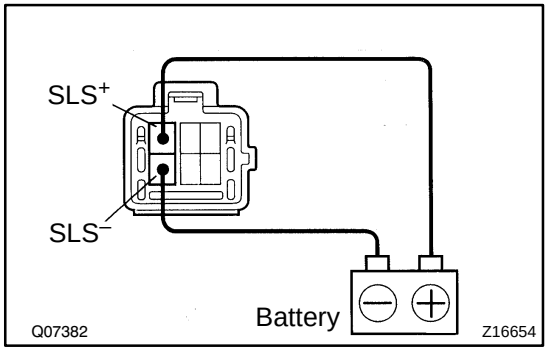

(c) Apply battery positive voltage at each terminal. At this time, check that the solenoid operates.

If the solenoid does not operate, replace the solenoid.

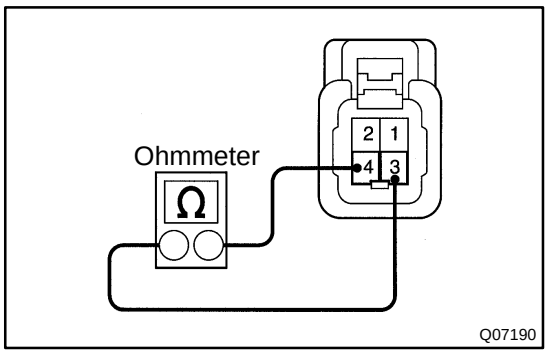

3. INSPECT KEY INTERLOCK SOLENOID

(a) Disconnect the solenoid connector.

(b) Using an ohmmeter, measure the resistance between terminals 3 and 4.

Standard resistance: 12 – 17 Ω

If resistance value is not as specified, replace the solenoid.

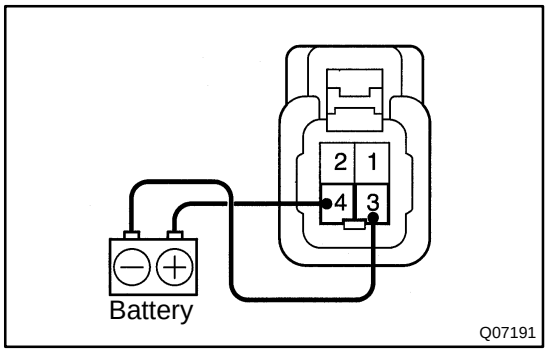

(c) Touch the solenoid with your finger and check that solenoid operation can be felt when battery positive voltage is applied intermittently to the terminals 1 and 2.

If the solenoid does not operate, replace the solenoid.

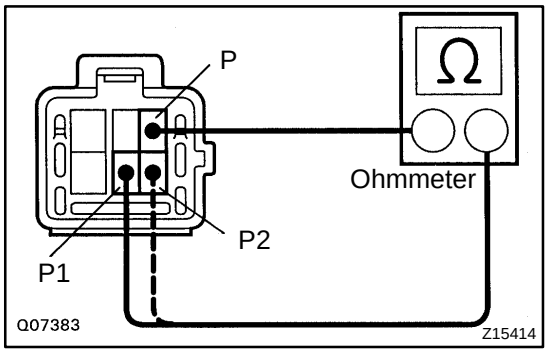

4. INSPECT SHIFT LOCK CONTROL SWITCH

Inspect that there is continuity between each terminal.

Shift position	Tester connection	Specified value
*1 P position	P1 – P or E	Continuity
*2 P position	P1 – P or E P2 – P or E	Continuity
R, N, D, 2, L position	P2 – P or E	Continuity

*1: Floor shift release button is not pushed.

*2: Floor shift release button is pushed.

If the continuity is not as specified, replace the switch.

SHIFT LOCK SYSTEM

LOCATION

AT01I–03

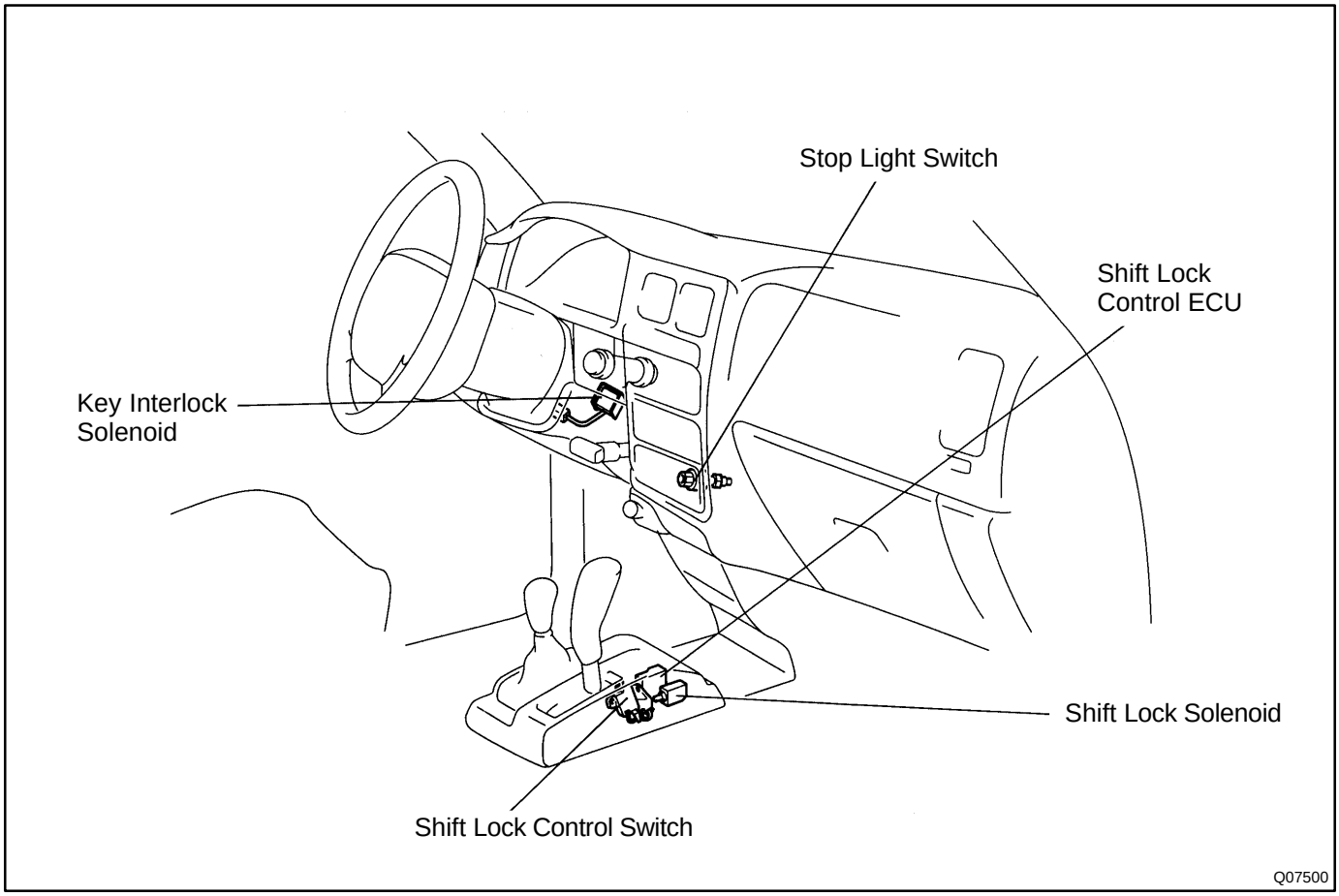

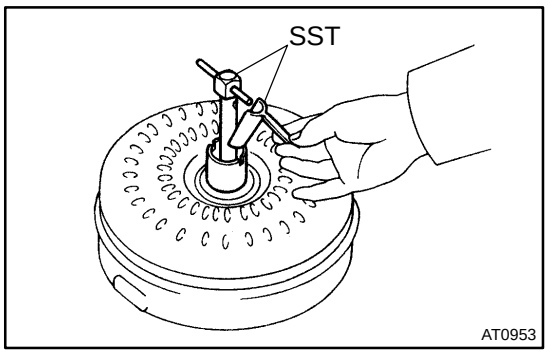

TORQUE CONVERTER CLUTCH AND DRIVE PLATE

AT01N–01

INSPECTION

1. INSPECT ONE–WAY CLUTCH

(a) Install SST in the inner race of the one–way clutch.
SST 09350–20015 (09397–22020)

(b) Install SST so that it fits in the notch of the converter hub and outer race of the one–way clutch.
SST 09350–20015 (09397–22020)

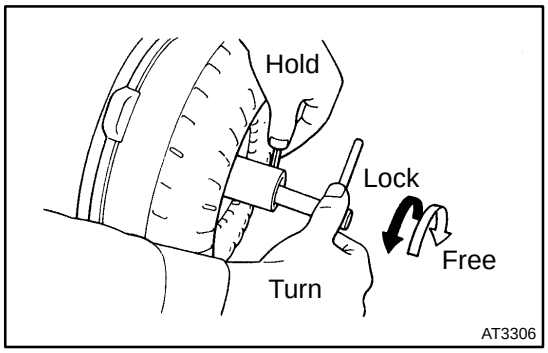

(c) With the torque converter clutch held upright, the clutch should lock when turned counterclockwise, and rotate freely and smoothly clockwise.

If necessary, clean the converter clutch and retest the clutch. Replace the converter clutch if the clutch still fails the test.

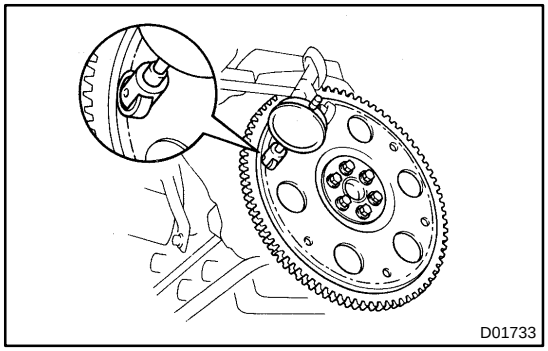

2. MEASURE DRIVE PLATE RUNOUT AND INSPECT RING GEAR

Set up a dial indicator and measure the drive plate runout.

Maximum runout: 0.20 mm (0.0079 in)

If runout is not within the specification or if the ring gear is damaged, replace the drive plate.

If installing a new drive plate, note the orientation of spacers and tighten the bolts.

Torque: 74 N·m (750 kgf·cm, 54 ft·lbf)

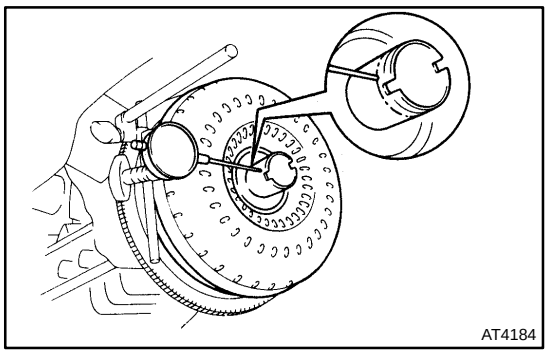

3. MEASURE TORQUE CONVERTER CLUTCH SLEEVE RUNOUT

Temporarily mount the torque converter clutch to the drive plate. Set up a dial indicator and measure the torque converter clutch sleeve runout.

Maximum runout: 0.30 mm (0.0118 in.)

If runout is not within the specification, try to correct by reorienting the installation of the converter.

HINT:

Mark the position of the torque converter clutch to ensure correct installation.

THROTTLE CABLE

AT01H–03

ON–VEHICLE REPAIR

1. DISCONNECT THROTTLE CABLE FROM ENGINE

Disconnect the cable from the throttle linkage.

2. REMOVE PARK/NEUTRAL POSITION SWITCH (See page AT–22)

3. DISCONNECT THROTTLE CABLE FROM TRANSMISSION HOUSING

Remove the bolt and disconnect the cable.

4. REMOVE DRAIN PLUG AND DRAIN ATF

5. REMOVE VALVE BODY (See page AT–23)

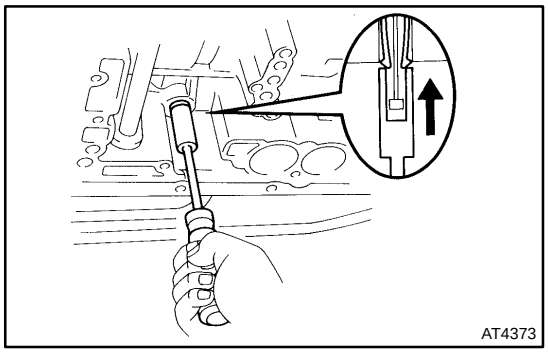

6. REMOVE THROTTLE CABLE FROM TRANSMISSION CASE

(a) Using a 10 mm socket driver, push the throttle cable end to remove it.

(b) Remove the O–ring.

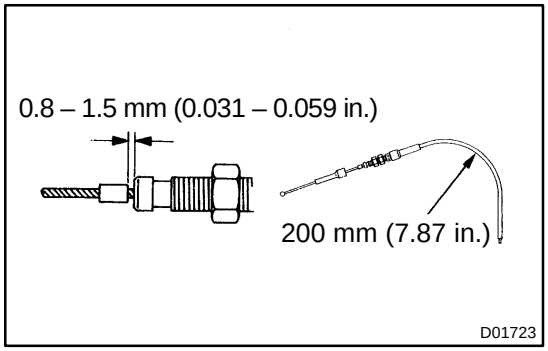

7. INSTALL THROTTLE CABLE TO TRANSMISSION CASE

If the throttle cable is new, perform the following operations (a) to (c).

(a) Bend the cable so there is a radius of about 200 mm (7.87 in.).

(b) Pull the inner cable lightly until a slight resistance is felt, and hold it.

(c) Stake the stopper 0.8 – 1.5 mm (0.031 – 0.059 in.) from the end of outer cable.

(d) Coat a new O–ring with ATF and install it to the cable.

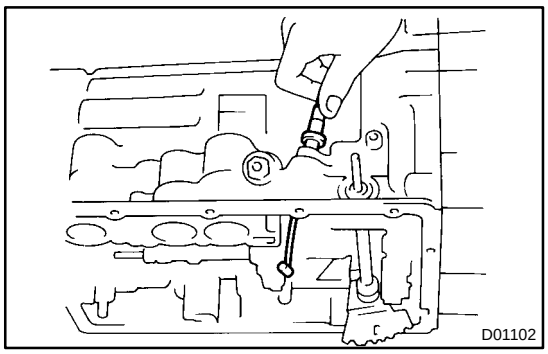

(e) Install the cable to the case.

8. INSTALL VALVE BODY (See page AT–23)

9. CONNECT THROTTLE CABLE TO TRANSMISSION HOUSING

Connect the cable with the bolt.

10. INSTALL PARK/NEUTRAL POSITION SWITCH (See page AT–22)

11. CONNECT THROTTLE CABLE TO ENGINE

12. INSTALL DRAIN PLUG
Torque: 20 N·m (205 kgf·cm, 15 ft·lbf)

13. FILL ATF AND CHECK FLUID LEVEL (See page AT–2)

14. ADJUST THROTTLE CABLE (See page AT–2)

15. TEST DRIVE VEHICLE

VALVE BODY ASSEMBLY

AT01F–03

ON–VEHICLE REPAIR

1. CLEAN TRANSMISSION EXTERIOR

To prevent contamination, clean the exterior of the transmission.

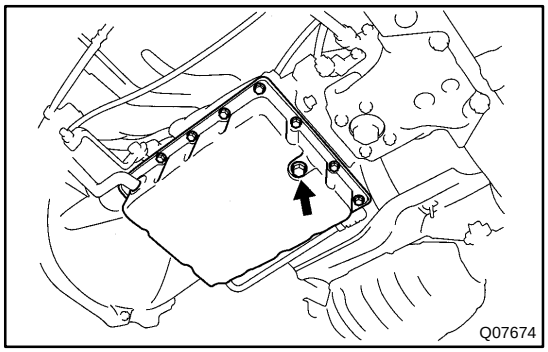

2. REMOVE DRAIN PLUG AND DRAIN ATF

3. REMOVE OIL PAN

NOTICE:

- **Some fluid will remain in the oil pan.**
- **Be careful not to damage the filler pipe.**

(a) Remove the 14 bolts, and carefully remove the oil pan.

(b) Remove the gasket.

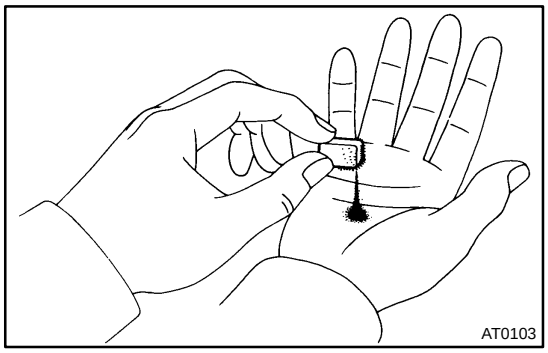

4. EXAMINE PARTICLES IN PAN

Remove the magnets and use them to collect any steel chips. Look carefully at the magnetic and non–magnetic chips to anticipate what type of wear you will find in the transmission.
Steel (magnetic): bearing, gear and plate wear
Brass (non–magnetic): bushing wear

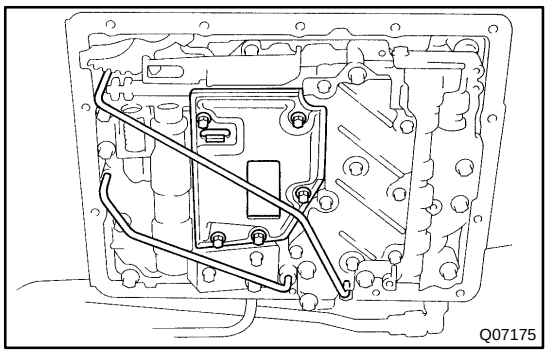

5. REMOVE OIL PIPES

Pry up both pipe ends with a large screwdriver and remove the 2 pipes.

NOTICE:

Be careful not to bend or damage the pipes.

6. REMOVE OIL STRAINER

Remove the 5 bolts, oil strainer and the gasket.

NOTICE:

Be careful as some oil will come out with the strainer.

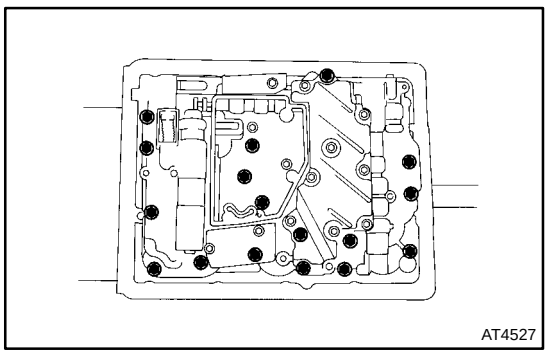

7. REMOVE VALVE BODY

(a) Remove the 17 bolts.

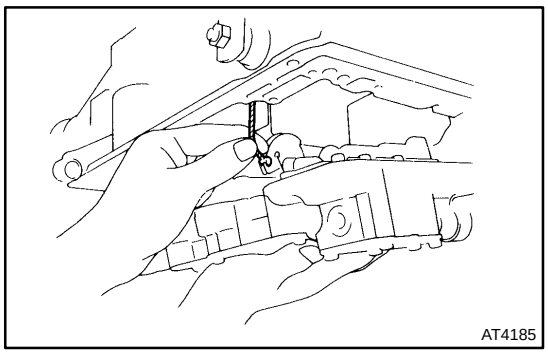

(b) Disconnect the throttle cable from the cam and remove the valve body.

8. INSTALL VALVE BODY

(a) While holding the cam down with your hand, connect the throttle cable.

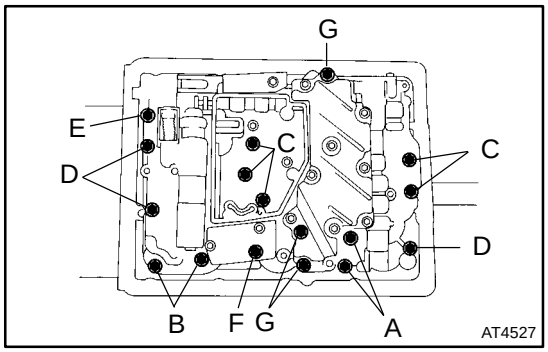

(b) Install the 17 bolts as shown in the illustration.
Torque: 10 N·m (100 kgf·cm, 7 ft·lbf)

HINT:

Each bolt length is indicated below.

Bolt length:
A: 20 mm (0.79 in.)
B: 25 mm (0.98 in.)
C: 30 mm (1.18 in.)
D: 35 mm (1.42 in.)
E: 40 mm (1.57 in.)
F: 47 mm (1.85 in.)
G: 55 mm (2.17 in.)

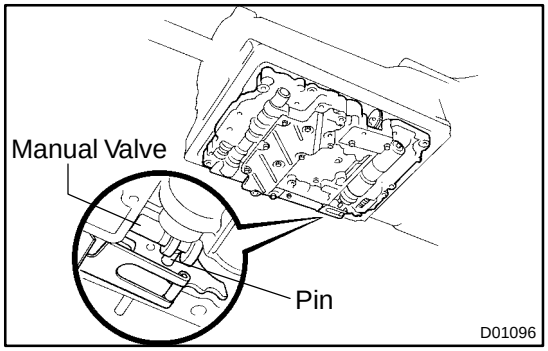

(c) Align the groove of the manual valve to the pin of the lever.

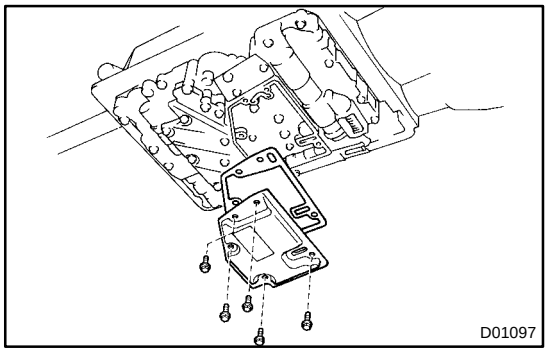

9. INSTALL OIL STRAINER

(a) Install a new gasket to the oil strainer.

(b) Install the oil strainer to the valve body with the 5 bolts.
Torque: 5.4 N·m (55 kgf·cm, 48 in.·lbf)

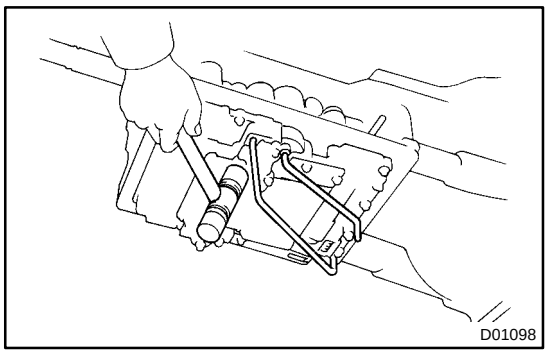

10. INSTALL OIL PIPES

Using a plastic hammer, install the 2 pipes.

NOTICE:

Be careful not to bend or damage the pipe.

11. INSTALL OIL PAN

(a) Install the 2 magnets in the oil pan.

NOTICE:

Make sure that the magnets do not interfere with the oil pipes.

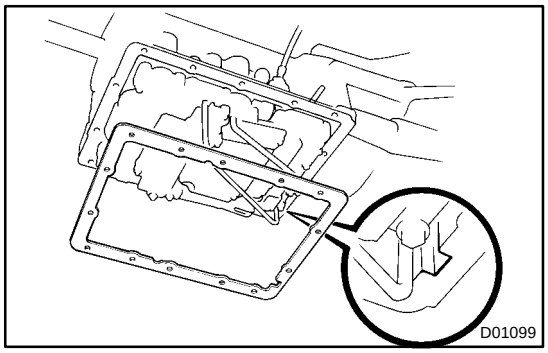

(b) Install a new gasket to the transmission case.

HINT:

Align the cut part of the gasket and case.

(c) Install the oil pan with the 14 bolts.

Torque: 4.4 N·m (45 kgf·cm, 39 in.·lbf)

NOTICE:

Be careful not to damage the filler pipe.

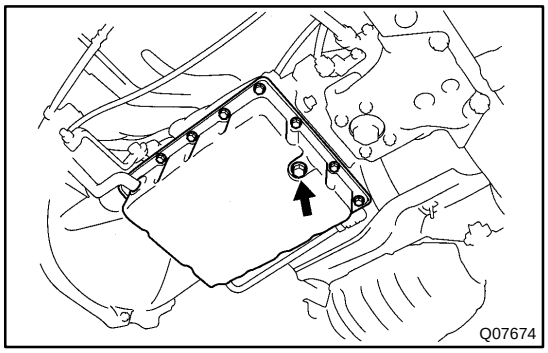

12. INSTALL DRAIN PLUG

Torque: 20 N·m (205 kgf·cm, 15 ft·lbf)

13. FILL ATF AND CHECK FLUID LEVEL (See page AT–2)

VEHICLE SPEED SENSOR

AT01D–01

ON–VEHICLE REPAIR

1. DISCONNECT VEHICLE SPEED SENSOR CONNECTOR

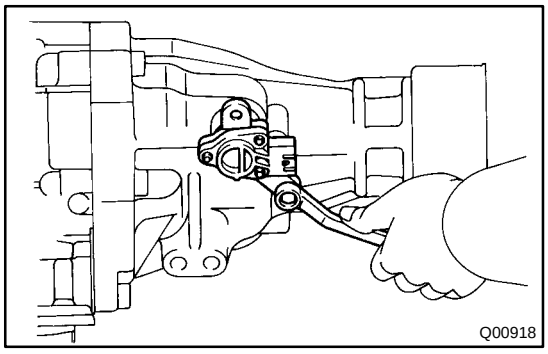

2. REMOVE VEHICLE SPEED SENSOR ASSEMBLY

(a) Remove the bolt and the vehicle speed sensor assembly.

(b) Remove the clip and the driven gear from the vehicle speed sensor.

(c) Remove the O–ring from the vehicle speed sensor.

3. INSTALL VEHICLE SPEED SENSOR ASSEMBLY

(a) Coat a new O–ring with ATF and install it to the vehicle speed sensor.

(b) Install the driven gear and the clip to the vehicle speed sensor.

(c) Install the vehicle speed sensor assembly with the bolt.
Torque: 16 N·m (160 kgf·cm, 12 ft·lbf)

4. CONNECT VEHICLE SPEED SENSOR CONNECTOR

ATF TEMPERATURE SENSOR

AT00T–02

ON–VEHICLE INSPECTION

1. DISCONNECT ATF TEMPERATURE SENSOR CONNECTOR

2. DISCONNECT OIL COOLER PIPE

(a) Remove the 3 bolts and clamps.

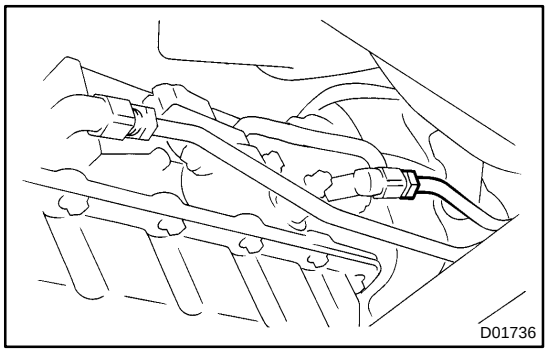

(b) Disconnect the oil cooler pipe.

3. REMOVE OIL COOLER ELBOW

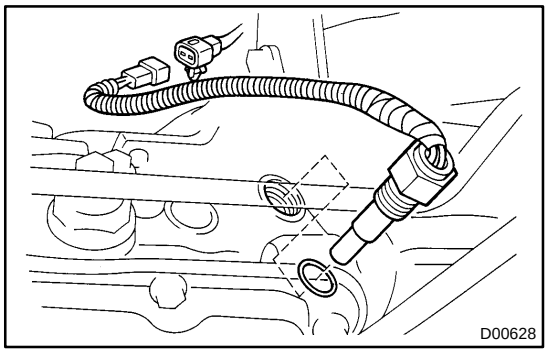

4. REMOVE ATF TEMPERATURE SENSOR

(a) Remove the ATF temperature sensor.

(b) Remove the O–ring from the ATF temperature sensor.

5. INSTALL ATF TEMPERATURE SENSOR

(a) Coat a new O–ring with ATF and install it to the ATF temperature sensor.

(b) Install the ATF temperature sensor.
Torque: 15 N·m (155 kgf·cm, 11 ft·lbf)

6. INSTALL OIL COOLER ELBOW

7. CONNECT OIL COOLER PIPE

(a) Connect the oil cooler pipe
Torque: 34 N·m (350 kgf·cm, 25 ft·lbf)

(b) Install the 3 clamps and bolts.

8. CONNECT ATF TEMPERATURE SENSOR

NOTICE:

Be careful not to twist the wire harness.

AT007–12

OPERATION

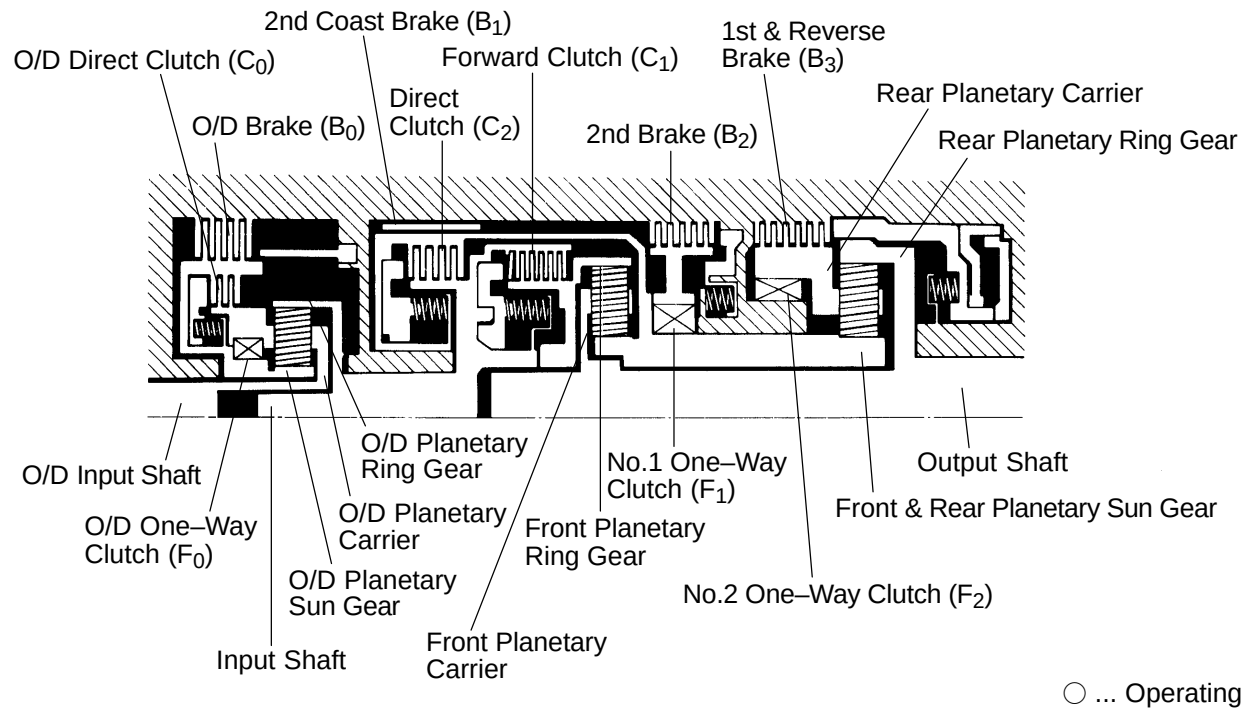

AT2157

○ ... Operating

Shift lever position	Gear position	C_0	C_1	C_2	B_0	B_1	B_2	B_3	F_0	F_1	F_2
P	Parking	○									
R	Reverse	○		○				○	○		
N	Neutral	○									
D	1st	○	○						○		○
	2nd	○	○				○		○	○	
	3rd	○	○	○			○		○		
	O/D		○	○	○		○				
2	1st	○	○						○		○
	2nd	○	○			○	○		○	○	
	*1 3rd	○	○	○			○		○		
L	1st	○	○					○	○		○
	*2 2nd	○	○			○	○		○	○	

*1: Down–shift only in the 2 position and 3rd gear — no up–shift.
*2: Down–shift only in the L position and 2nd gear — no up–shift.

V07130

AUTOMATIC TRANSMISSION SYSTEM

AT00R–01

PRECAUTION

If the vehicle is equipped with a mobile communication system, refer to the precautions in the IN section.

AUTOMATIC TRANSMISSION UNIT (A340E)

AT07F–05

COMPONENTS

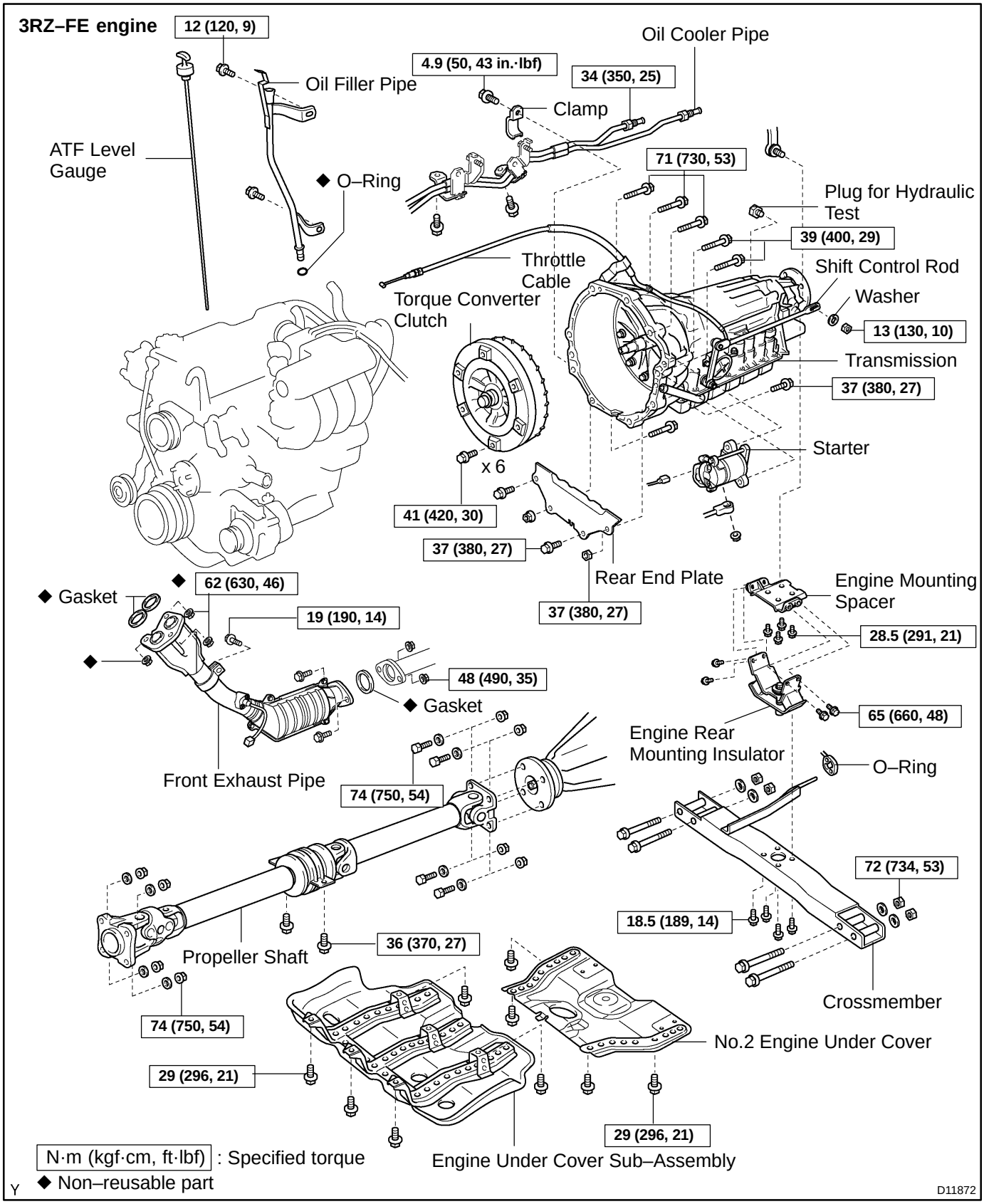

5VZ–FE engine

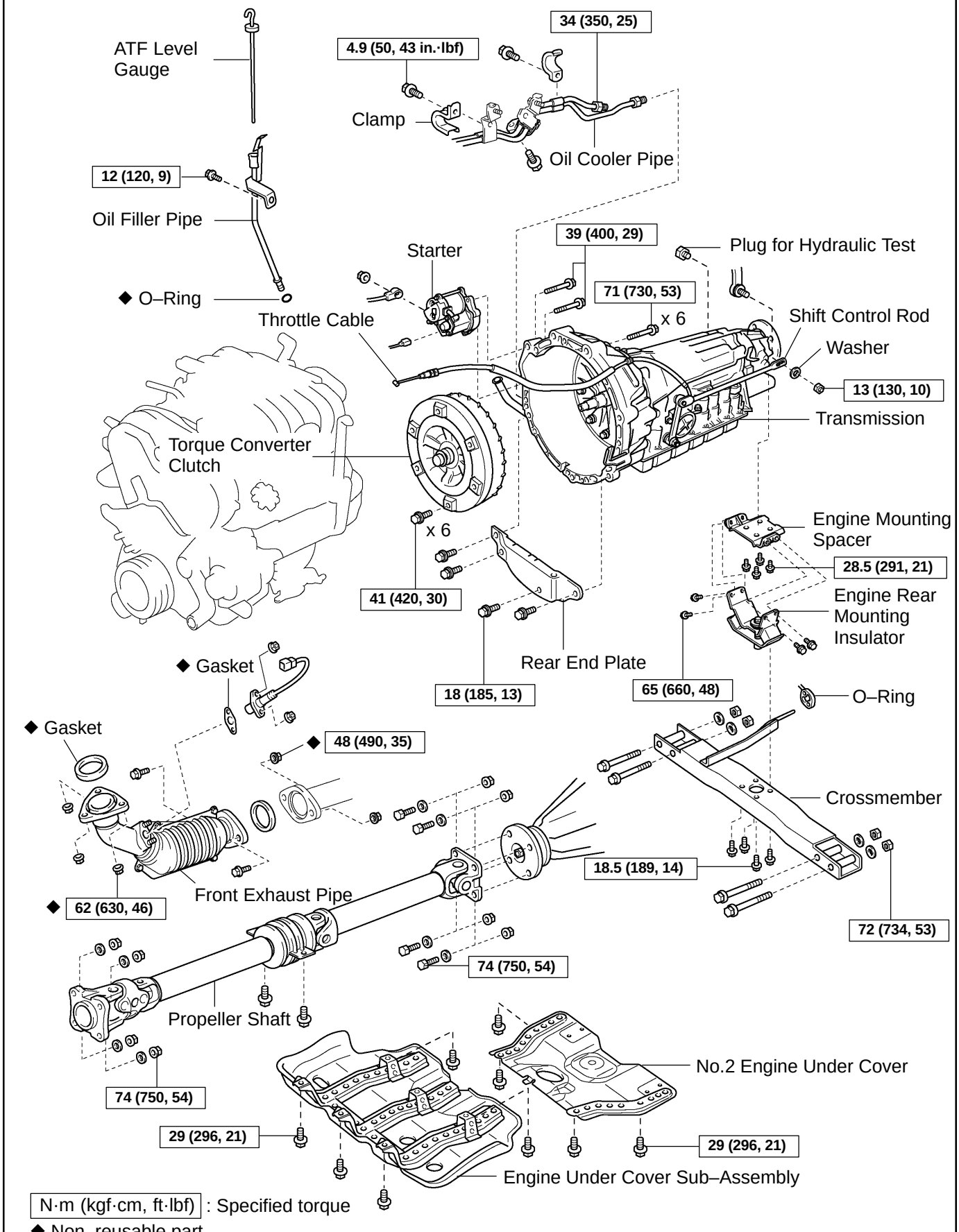

N·m (kgf·cm, ft·lbf) : Specified torque
◆ Non–reusable part

Y

D11874

AT016–09

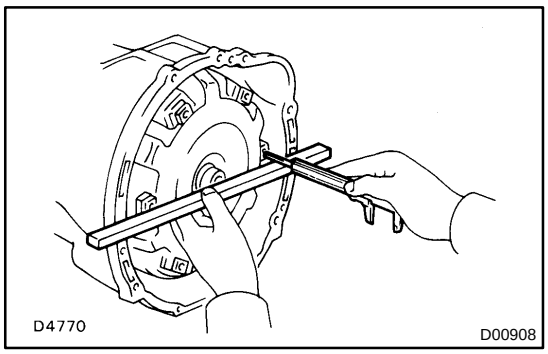

INSTALLATION

1. CHECK TORQUE CONVERTER CLUTCH INSTALLATION

Using calipers and a straight edge, measure the distance from the installed surface of the transmission housing to the installed surface of the torque converter clutch.

Correct distance:

3RZ–FE: More than 31.75 mm (1.2500 in.)

5VZ–FE: More than 17.95 mm (0.7067 in.)

2. INSTALL TRANSMISSION

Installation is in the reverse order of removal (See page AT–24).

HINT:

- After installation, adjust the shift lever position and throttle cable (See page DI–456).
- Fill ATF and check fluid level (See page DI–456).

AT0FM–03

REMOVAL

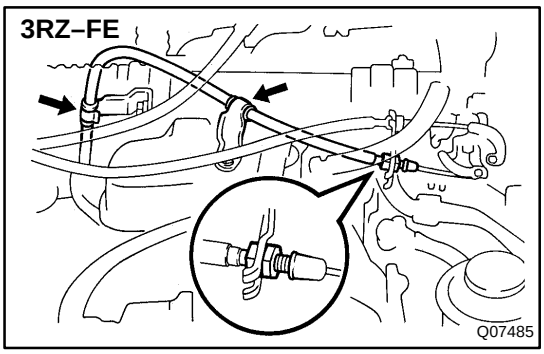

1. 3RZ–FE:
DISCONNECT THROTTLE CABLE

(a) Loosen the 2 nuts and disconnect the throttle cable.

(b) Disconnect the throttle cable from cable clamps in the engine compartment.

2. REMOVE ATF LEVEL GAUGE

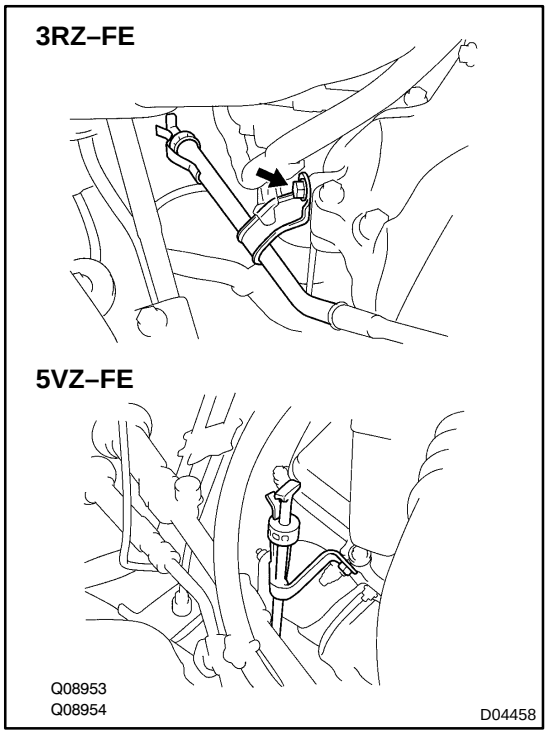

3. REMOVE OIL FILLER PIPE

Remove the bolt and oil filler pipe with the O–ring.

Torque: 12 N·m (120 kgf·cm, 9 ft·lbf)

HINT:

At the time of installation, replace the used O–ring with a new one.

4. REMOVE ENGINE UNDER COVER

Torque: 29 N·m (296 kgf·cm, 21 ft·lbf)

5. REMOVE PROPELLER SHAFT (See page PR–2)

6. REMOVE FRONT EXHAUST PIPE

(See page 3RZ–FE: EM–108, 5VZ–FE: EM–105)

7. DISCONNECT OIL COOLER PIPE

(a) Loosen the 2 oil cooler pipe unions.

Torque: 34 N·m (350 kgf·cm, 25 ft·lbf)

(b) Remove the 3 oil cooler clamp set bolts and disconnect the 2 oil cooler pipes.

Torque: 4.9 N·m (50 kgf·cm, 43 in.·lbf)

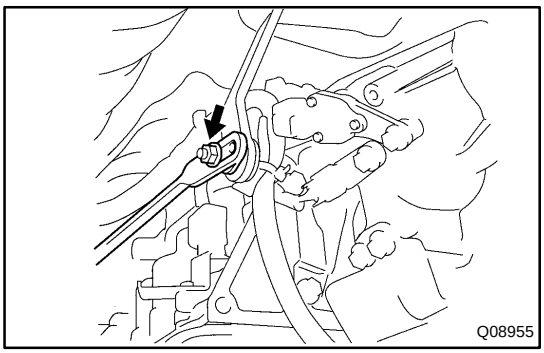

8. DISCONNECT SHIFT CONTROL ROD FROM SHIFT LEVER

Remove the nut and washer, and disconnect the shift control rod.

Torque: 13 N·m (130 kgf·cm, 10 ft·lbf)

9. DISCONNECT CONNECTOR FROM TRANSMISSION

(a) Disconnect the No.1 vehicle speed sensor connector (3RZ–FE only).

(b) Disconnect the No.2 vehicle speed sensor connector.

(c) Disconnect the solenoid wire connector.

(d) Disconnect the ATF temperature sensor connector.

(e) Disconnect the park/neutral position switch connector.

(f) Separate wire harness from transmission.

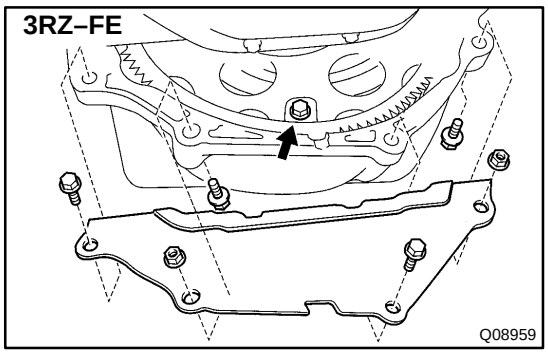

10. REMOVE REAR END PLATE AND TORQUE CONVERTER CLUTCH MOUNTING BOLT

(a) 3RZ–FE:
Remove the 2 nuts, 4 bolts and rear end plate.
Torque: 37 N·m (380 kgf·cm, 27 ft·lbf)

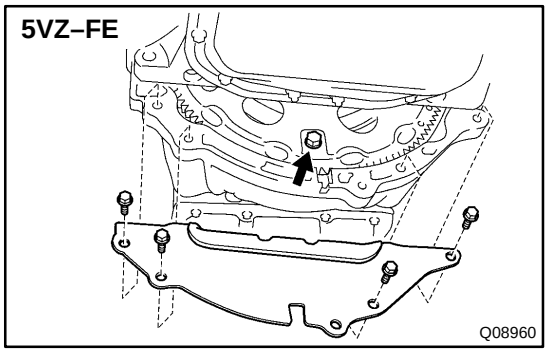

(b) 5VZ–FE:
Remove the 4 bolts and rear end plate.
Torque: 18 N·m (185 kgf·cm, 13 ft·lbf)

(c) Turn the crankshaft to gain access and remove the 6 bolts with holding the crankshaft pulley set bolt by a wrench.
Torque: 41 N·m (420 kgf·cm, 30 ft·lbf)

HINT:
At the time of installation, first install green colored bolt and then 5 other bolts.

11. JACK UP TRANSMISSION SLIGHTLY

Securely support the transmission on a transmission jack. Lift the transmission slightly from the crossmember.

12. REMOVE CROSSMEMBER

(a) Disconnect the crossmember from the O–ring.

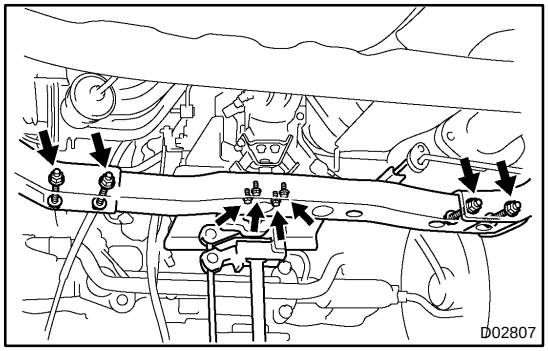

(b) Remove the 4 bolts on the rear mounting side from the engine rear mounting insulator.
Torque: 18.5 N·m (189 kgf·cm, 14 ft·lbf)

(c) Remove the 4 nuts, bolts, washers and crossmember.
Torque: 72 N·m (734 kgf·cm, 53 ft·lbf)

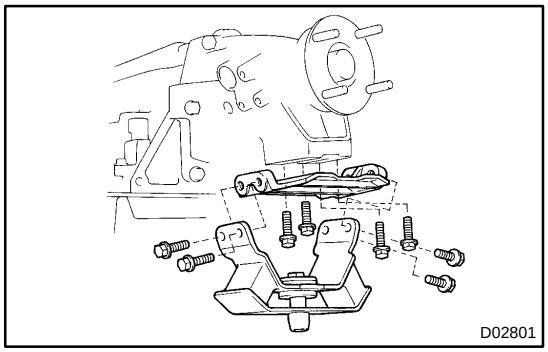

13. REMOVE ENGINE REAR MOUNTING INSULATOR AND ENGINE MOUNTING SPACER

(a) Remove the 4 bolts and engine rear mounting insulator from the engine mounting spacer.
Torque: 65 N·m (660 kgf·cm, 48 ft·lbf)

(b) Remove the 4 bolts and engine mounting spacer from the transmission.
Torque: 28.5 N·m (291 kgf·cm, 21 ft·lbf)

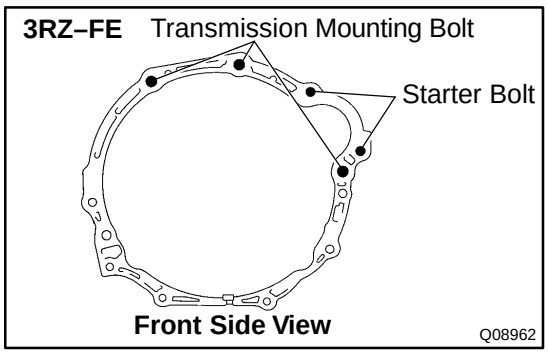

14. REMOVE STARTER

(a) Remove the nut and disconnect the starter wire and connector.

(b) Remove the 2 bolts and starter.
Torque: 39 N·m (400 kgf·cm, 29 ft·lbf)

15. REMOVE TRANSMISSION

(a) 3RZ–FE:
Remove the 3 bolts and transmission.
Torque: 71 N·m (730 kgf·cm, 53 ft·lbf)

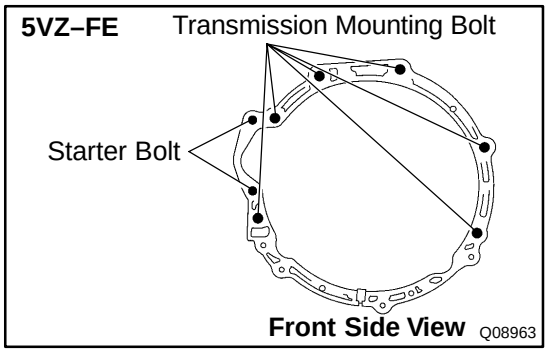

(b) 5VZ–FE:
Remove the 6 bolts and transmission.
Torque: 71 N·m (730 kgf·cm, 53 ft·lbf)

AUTOMATIC TRANSMISSION UNIT (A340F)

COMPONENTS

AT014–07

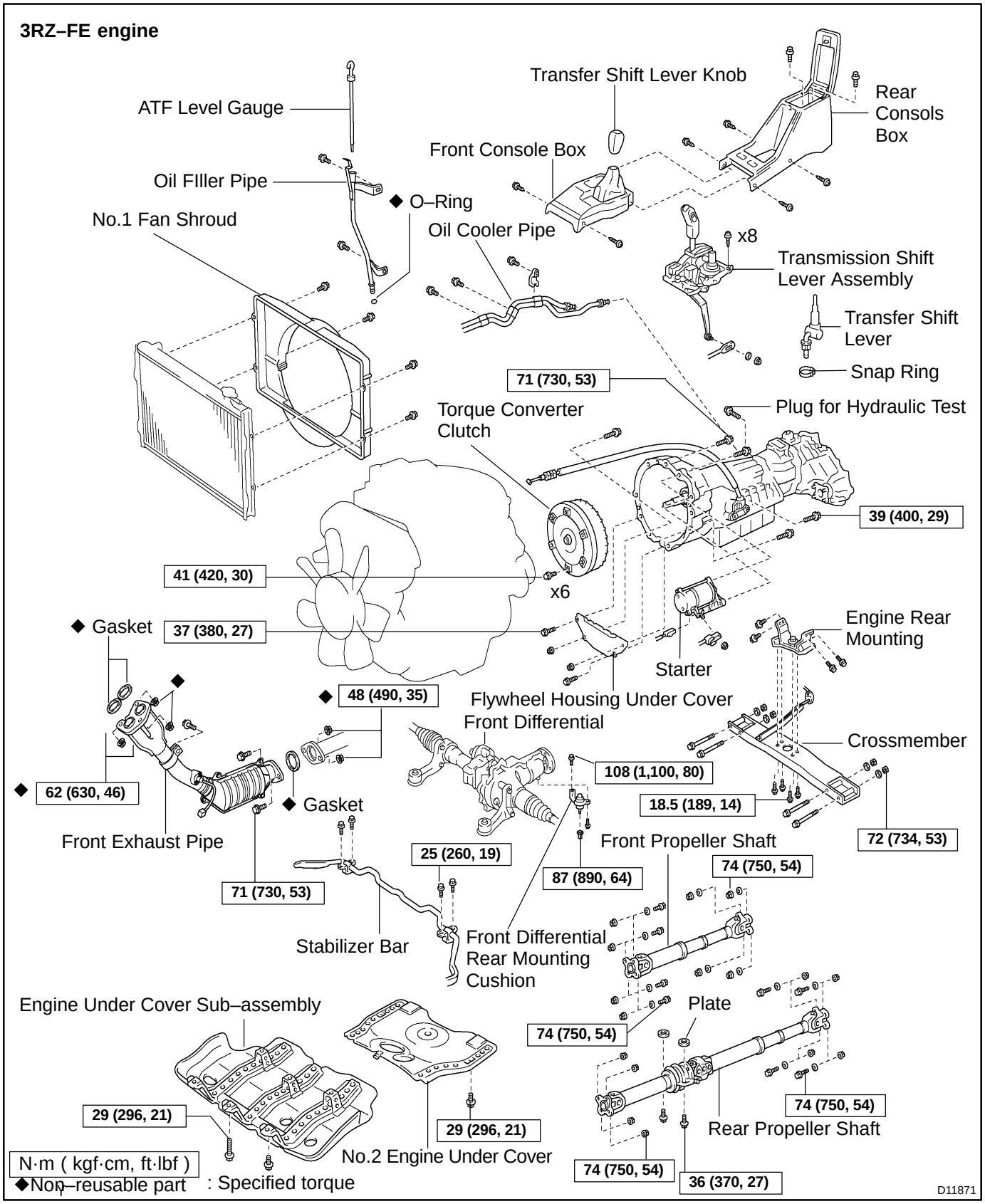

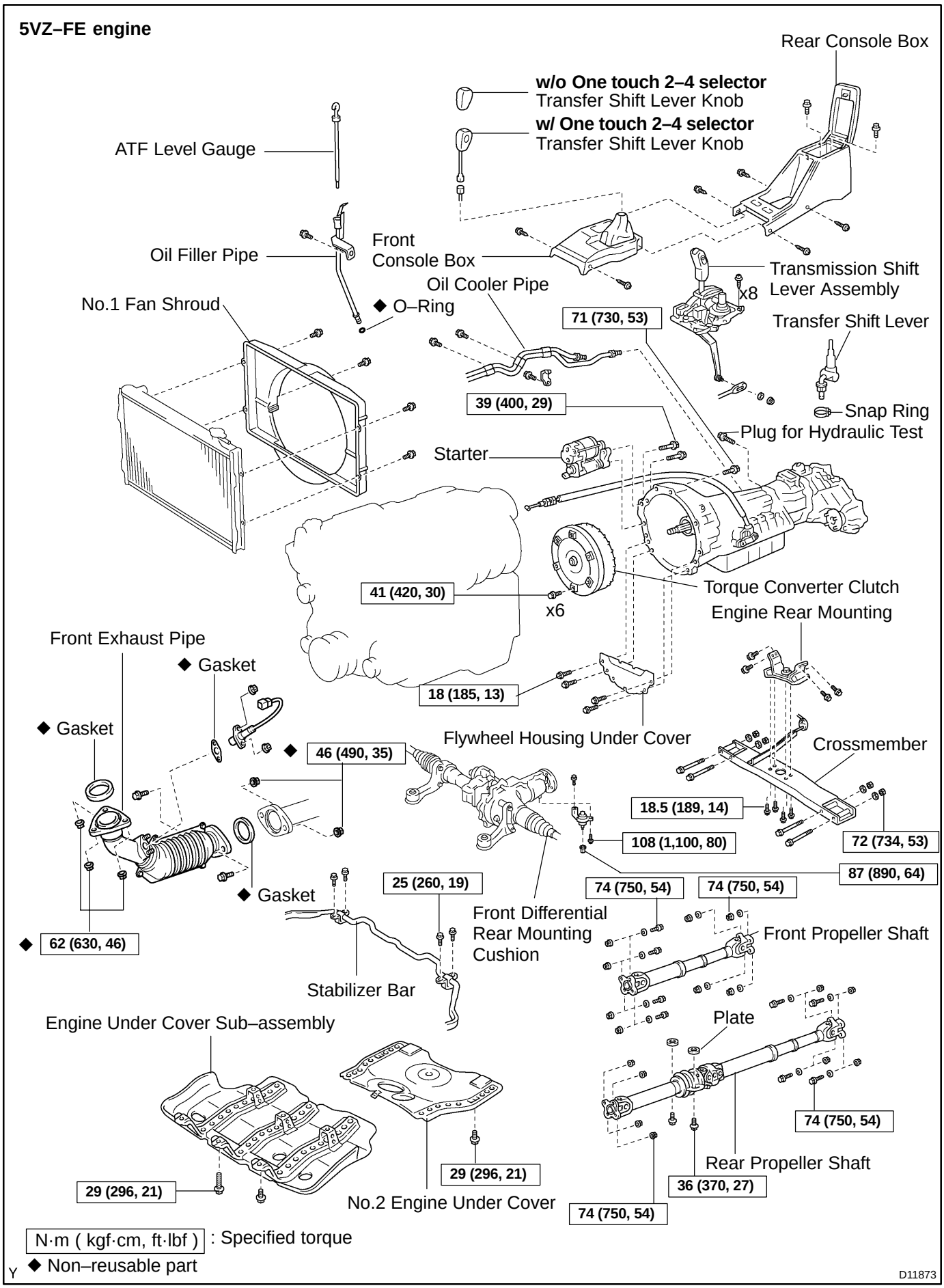
5VZ–FE engine
Rear Console Box
w/o One touch 2–4 selector
Transfer Shift Lever Knob
w/ One touch 2–4 selector
Transfer Shift Lever Knob
ATF Level Gauge
Oil Filler Pipe
Front
Console Box
Transmission Shift
Lever Assembly
x8
Oil Cooler Pipe
No.1 Fan Shroud
◆ O–Ring
71 (730, 53)
Transfer Shift Lever
39 (400, 29)
Snap Ring
Plug for Hydraulic Test
Starter
41 (420, 30)
x6
Torque Converter Clutch
Engine Rear Mounting
Front Exhaust Pipe
◆ Gasket
◆ Gasket
18 (185, 13)
Flywheel Housing Under Cover
Crossmember
◆ 46 (490, 35)
18.5 (189, 14)
72 (734, 53)
108 (1,100, 80)
87 (890, 64)
74 (750, 54)
74 (750, 54)
◆ Gasket
25 (260, 19)
Front Differential
Rear Mounting
Cushion
Front Propeller Shaft
◆ 62 (630, 46)
Stabilizer Bar
Engine Under Cover Sub–assembly
Plate
74 (750, 54)
29 (296, 21)
29 (296, 21)
No.2 Engine Under Cover
Rear Propeller Shaft
36 (370, 27)
74 (750, 54)
N·m (kgf·cm, ft·lbf) : Specified torque
◆ Non–reusable part
D11873

AT016–08

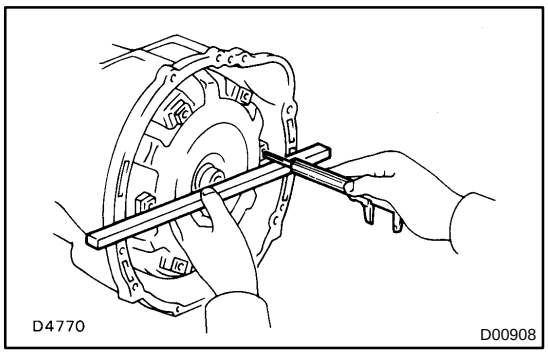

INSTALLATION

1. CHECK TORQUE CONVERTER CLUTCH INSTALLATION

Using calipers and a straight edge, measure the distance from the installed surface of the transmission housing to the installed surface of the torque converter clutch.

Correct distance:

3RZ–FE: More than 31.75 mm (1.2500 in.)

5VZ–FE: More than 17.95 mm (0.7067 in.)

2. INSTALL TRANSMISSION

Installation is in the reverse order of removal (See page AT–30).

HINT:

- After installation, adjust the shift lever position and throttle cable (See page DI–456).
- Fill and check fluid lever (See page DI–456).

AT015–05

REMOVAL

1. REMOVE ATF LEVEL GAUGE

2. REMOVE ENGINE UNDER COVER

Torque: 29 N·m (296 kgf·cm, 21 ft·lbf)

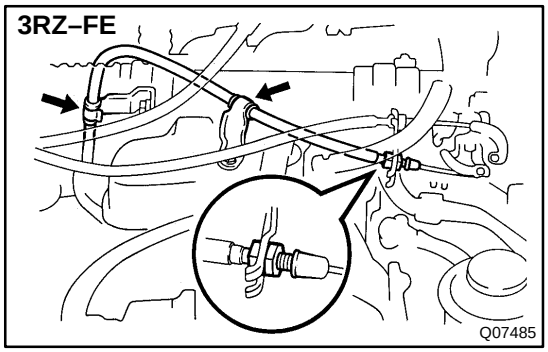

3. 3RZ–FE:

DISCONNECT THROTTLE CABLE

(a) Loosen the nut and disconnect the cable.

(b) Separate the throttle cable from the clamp.

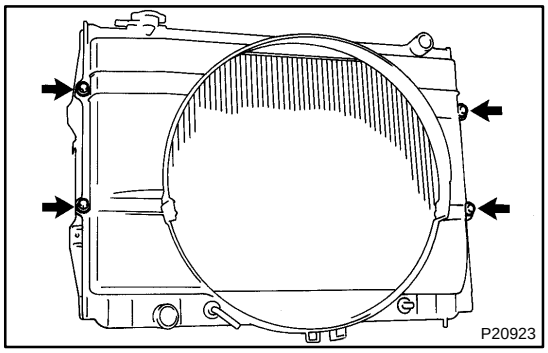

4. REMOVE NO.1 FAN SHROUD

Remove the 4 bolts and No.1 fan shroud.

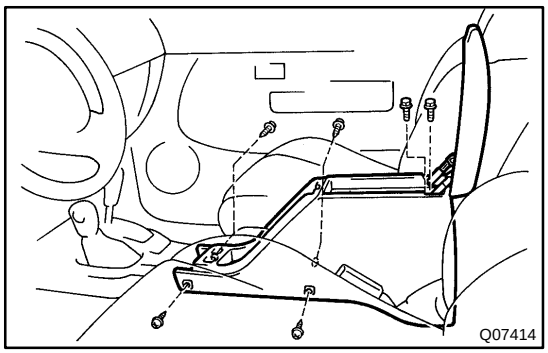

5. REMOVE TRANSMISSION SHIFT LEVER ASSEMBLY AND TRANSFER SHIFT LEVER

(a) Remove the 2 bolts, 4 screws and rear console box.

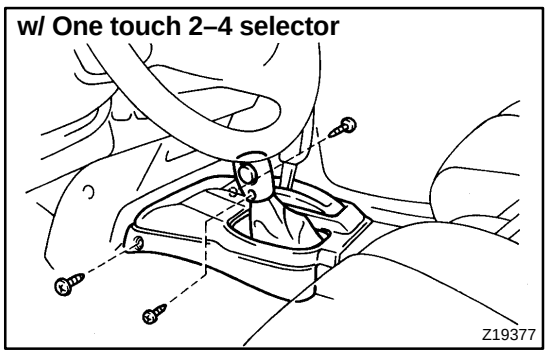

(b) w/ One touch 2–4 selector:

Remove the 3 screws and front console box with the transfer shift lever knob.

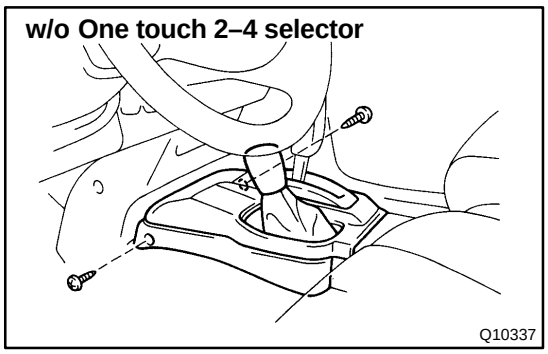

(c) w/o One touch 2–4 selector:
Remove the 2 screws and front console box with the transfer shift lever knob.

(d) Disconnect the connectors.

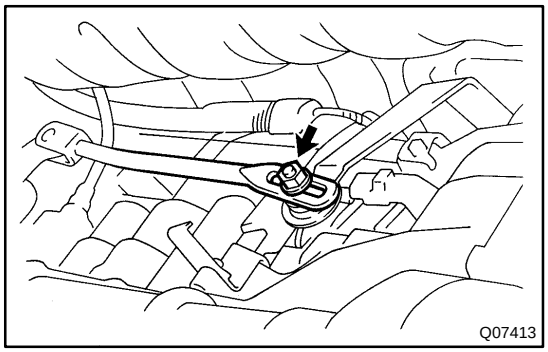

(e) Remove the nut and washer, and disconnect the shift control rod.

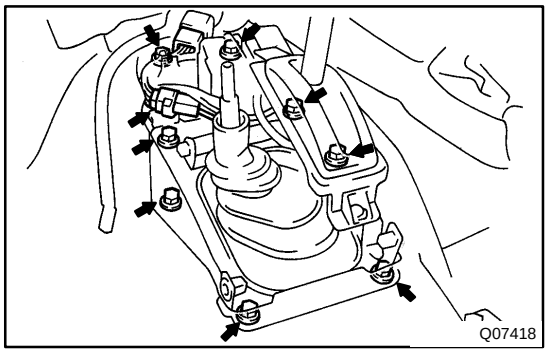

(f) Disconnect the connector and remove the 8 screws and transmission shift lever assembly.

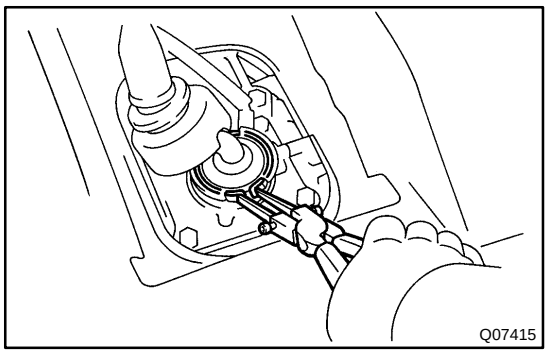

(g) Using snap ring pliers, remove the snap ring and pull out the shift lever from the transfer.

HINT:
At the time of installation, apply MP grease to the transfer shift lever.

6. REMOVE OIL FILLER PIPE

(a) 3RZ–FE:
Remove the 2 bolts and oil filler pipe with the O–ring.

HINT:
At the time of installation, replace the used O–ring with a new one.

(b) 5VZ–FE:
Remove the bolt and oil filler pipe with the O–ring.

HINT:
At the time of installation, replace the used O–ring with a new one.

7. REMOVE FRONT AND REAR PROPELLER SHAFT
(See page PR–11)

8. REMOVE EXHAUST PIPE
(3RZ–FE: See page EM–108)
(5VZ–FE: See page EM–105)

HINT:
At the time of installation, please refer to the following item.
Replace the used gaskets and nuts with new ones.

9. 3RZ–FE:
DISCONNECT NO.1 VEHICLE SPEED SENSOR CONNECTOR FROM TRANSMISSION

10. DISCONNECT NO. 2 VEHICLE SPEED SENSOR CONNECTOR FROM TRANSMISSION

11. DISCONNECT SOLENOID CONNECTOR FROM TRANSMISSION

12. DISCONNECT ATF TEMPERATURE SENSOR CONNECTOR FROM TRANSMISSION

13. DISCONNECT PARK/NEUTRAL POSITION SWITCH CONNECTOR FROM TRANSMISSION

14. DISCONNECT NO. 1 VEHICLE SPEED SENSOR CONNECTOR FROM TRANSFER

15. DISCONNECT TRANSFER NEUTRAL POSITION SWITCH CONNECTOR FROM TRANSFER

16. DISCONNECT TRANSFER L4 POSITION SWITCH CONNECTOR FROM TRANSFER

17. DISCONNECT TRANSFER 4WD POSITION SWITCH CONNECTOR FROM TRANSFER

18. DISCONNECT ACTUATOR CONNECTOR FROM TRANSFER

19. SEPARATE WIRE HARNESS FROM TRANSMISSION AND TRANSFER

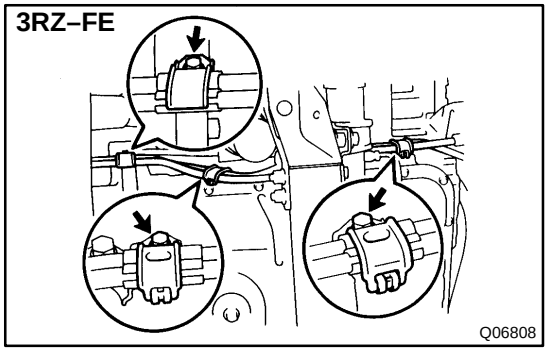

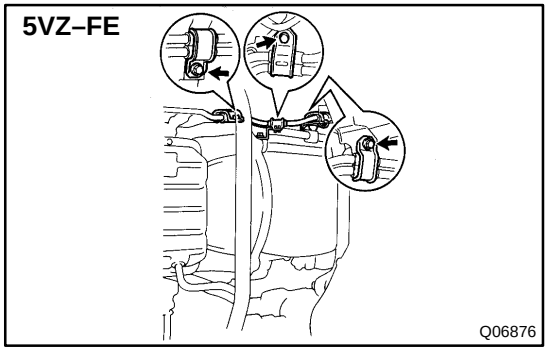

20. DISCONNECT OIL COOLER PIPE

(a) Remove the 3 bolts and clamps.

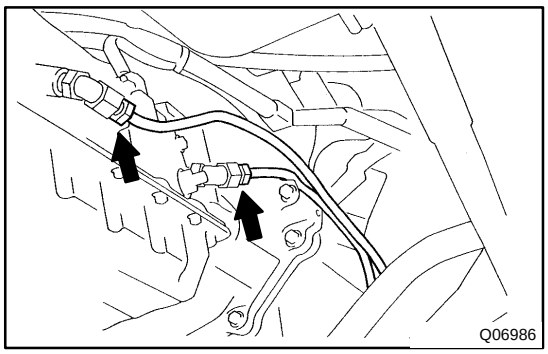

(b) Loosen the 2 union nuts and disconnect the 2 oil cooler pipes.
Torque: 34 N·m (350 kgf·cm, 25 ft·lbf)

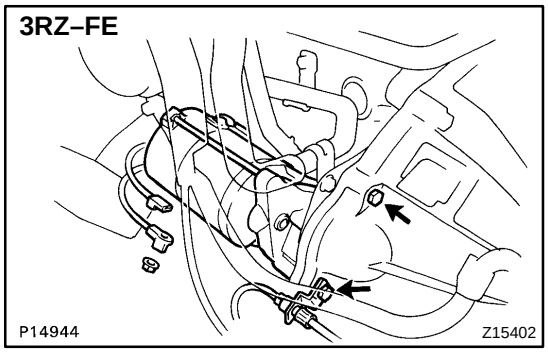

21. REMOVE STARTER
(a) Remove the nut and disconnect the connector and terminal.
(b) Remove the 2 bolts and starter.
Torque: 39 N·m (400 kgf·cm, 29 ft·lbf)
22. REMOVE 4 STABILIZER BAR BRACKET MOUNTING BOLTS (See page SA–123)

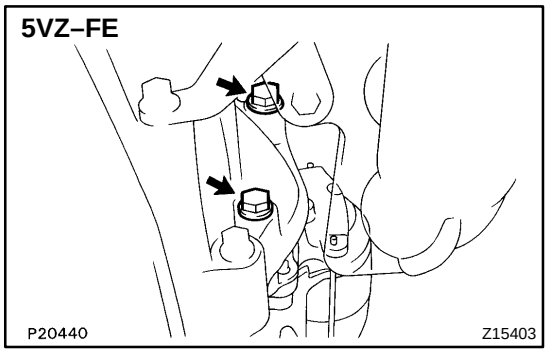

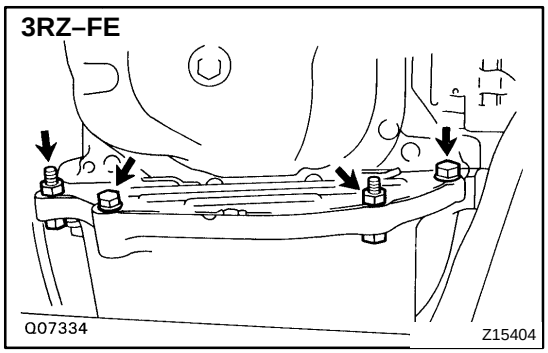

23. 3RZ–FE:
REMOVE TORQUE CONVERTER CLUTCH MOUNTING BOLT
(a) Remove the 2 nuts and bolts.
(b) Remove the 2 bolts and flywheel housing under cover.
Torque: 37 N·m (380 kgf·cm, 27 ft·lbf)

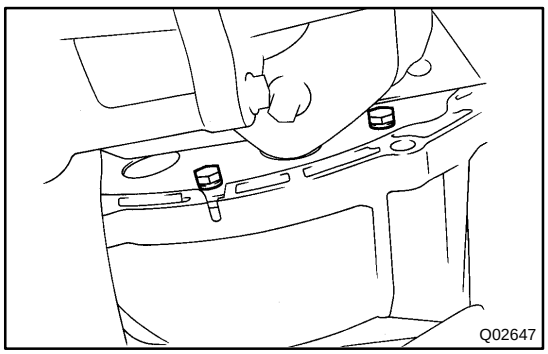

(c) Turn the crankshaft to gain access to each bolt, remove the 6 bolts with holding the crankshaft pulley bolt with a wrench.
Torque: 41 N·m (420 kgf·cm, 30 ft·lbf)

HINT:
At the time of installation, first install green colored bolt and then 5 other bolts.

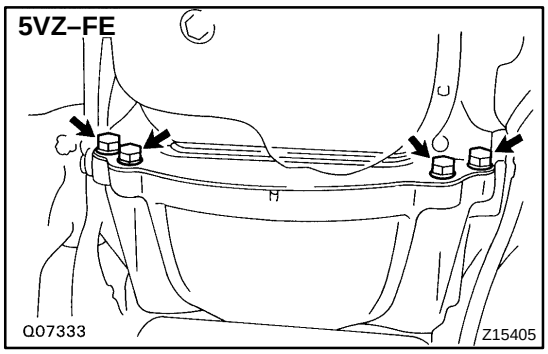

24. 5VZ–FE:
REMOVE TORQUE CONVERTER CLUTCH MOUNTING BOLT

(a) Remove the 4 bolts and flywheel housing under cover.
Torque: 18 N·m (185 kgf·cm, 13 ft·lbf)

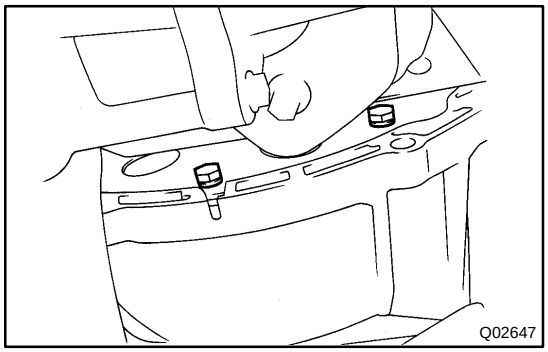

(b) Turn the crankshaft to gain access to each bolt, remove the 6 bolts with holding the crankshaft pulley bolt with a wrench.
Torque: 41 N·m (420 kgf·cm, 30 ft·lbf)

HINT:
At the time of installation, first install green colored bolt and then 5 other bolts.

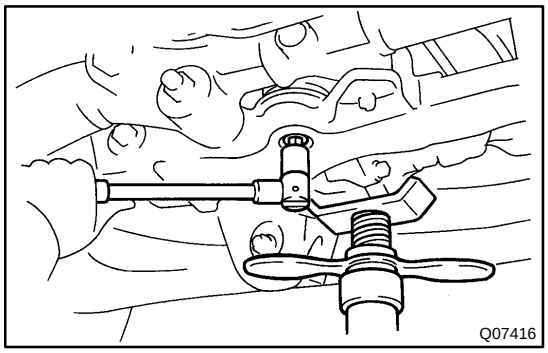

25. REMOVE FRONT DIFFERENTIAL REAR MOUNTING CUSHION

(a) Using a hexagon wrench (12 mm), remove the nut.
Torque: 87 N·m (890 kgf·cm, 64 ft·lbf)

(b) Lift up the front differential with a support stand.

NOTICE:
Be careful not to touch the torque converter clutch housing and front differential companion flange.

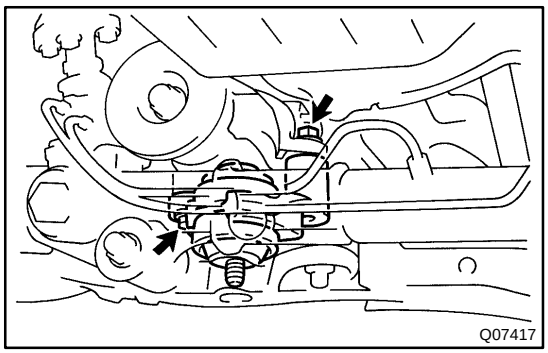

(c) Remove the 2 rear mounting cushion mounting bolts.
Torque: 108 N·m (1,100 kgf·cm, 80 ft·lbf)

26. REMOVE CROSSMEMBER

(a) Support the transmission rear side with a support stand.

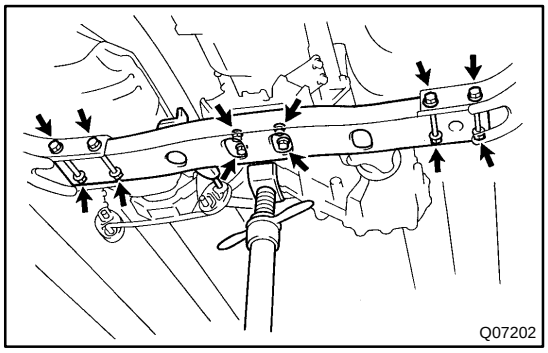

(b) Remove the 4 engine rear mounting bolts.
Torque: 18.5 N·m (189 kgf·cm, 14 ft·lbf)

(c) Remove the 4 nuts, bolts and crossmember.
Torque: 72 N·m (734 kgf·cm, 53 ft·lbf)

(d) Support the transmission with a transmission jack.

27. REMOVE TRANSMISSION

(a) Lower the transmission rear side.

(b) Separate the wire harness from the transmission.

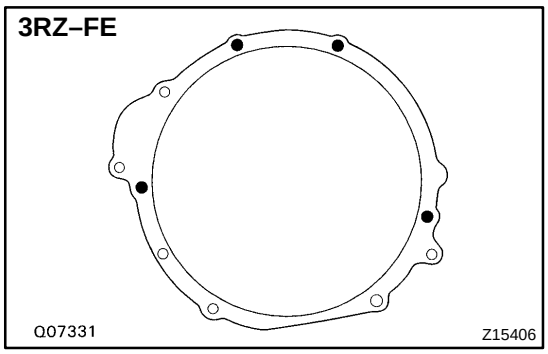

(c) 3RZ–FE:
Remove the 4 bolts and transmission.
Torque: 71 N·m (730 kgf·cm, 53 ft·lbf)

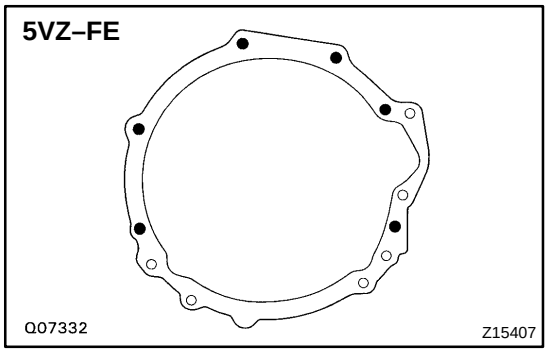

(d) 5VZ–FE:
Remove the 6 bolts and transmission.
Torque: 71 N·m (730 kgf·cm, 53 ft·lbf)

EXTENSION HOUSING OIL SEAL (A340E)

AT03H–05

ON–VEHICLE REPAIR

1. REMOVE DRAIN PLUG AND DRAIN ATF

2. REMOVE PROPELLER SHAFT (See page PR–3)

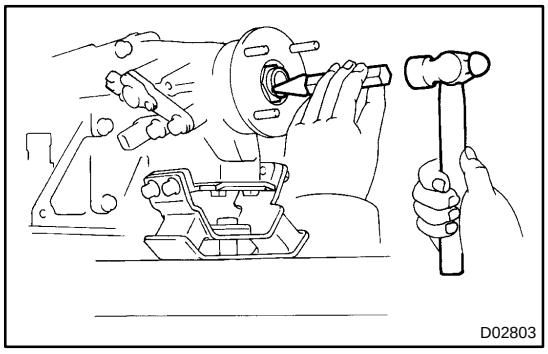

3. REMOVE TRANSMISSION OUTPUT FLANGE

(a) Using a chisel and hammer, loosen the staked part of the nut.

HINT:

Shift the shift lever to the P position.

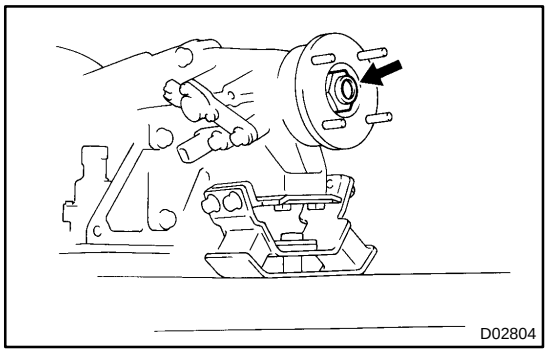

(b) Remove the nut.

(c) Tap the output flange with a plastic hammer to remove it and 2 washers.

(d) Using a screwdriver, remove the oil seal from the output flange.

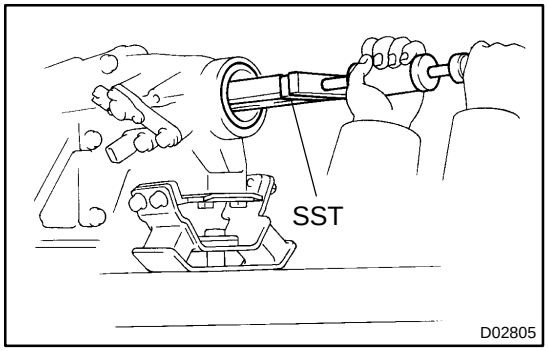

4. REMOVE EXTENSION HOUSING REAR OIL SEAL

Using SST, remove the oil seal.

SST 09308–00010

5. INSTALL EXTENSION HOUSING REAR OIL SEAL

(a) Coat the lip of a new oil seal with MP grease.

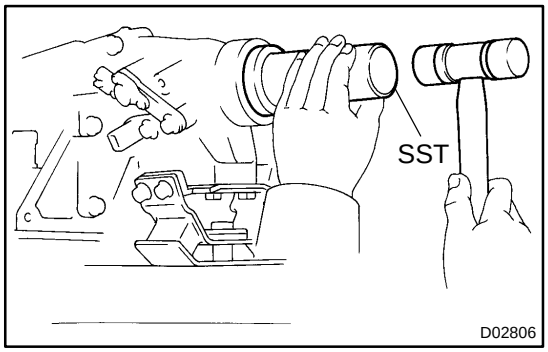

(b) Using SST and a plastic hammer, drive in the oil seal with the lip facing downward.

SST 09309–37010

Oil seal depth from flat end: 0 – 0.3 mm (0 – 0.012 in.)

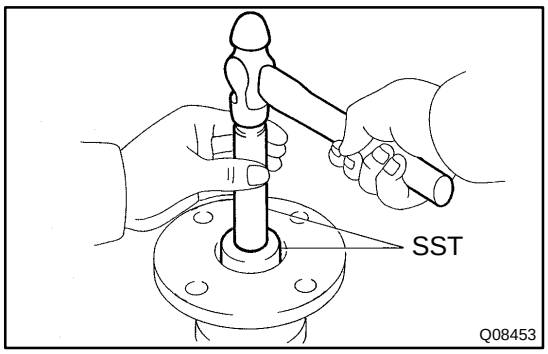

6. INSTALL TRANSMISSION OUTPUT FLANGE

(a) Using SST and a hammer, drive in a new oil seal.
SST 09950–60010 (09951–00350), 09950–70010 (09951–07100)

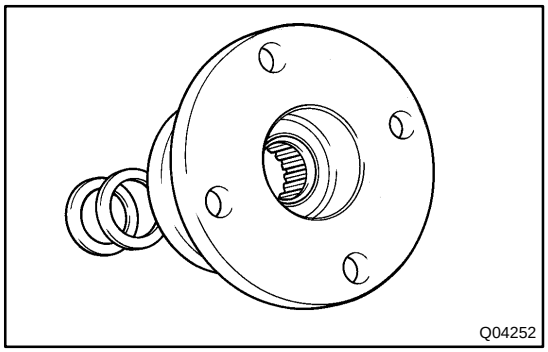

(b) Install the output flange and 2 washers.

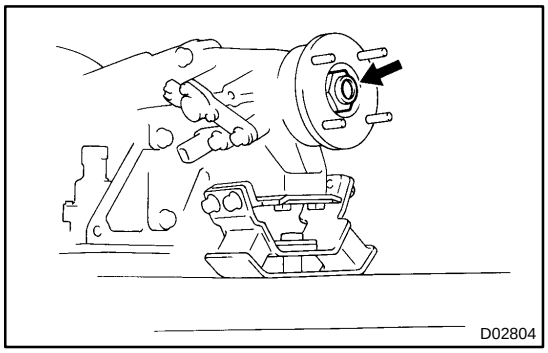

(c) Install and torque a new nut.
Torque: 123 N·m (1,250 kgf·cm, 90 ft·lbf)

HINT:
Shift the shift lever to the P position.

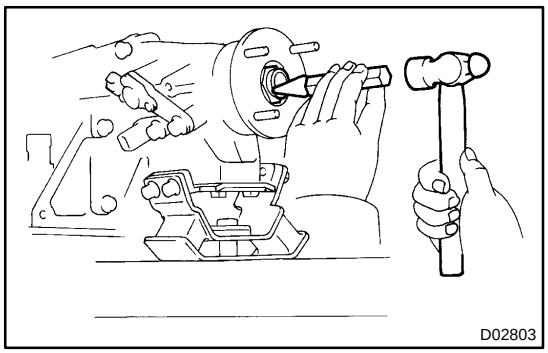

(d) Using a chisel and hammer, stake the nut.

7. INSTALL PROPELLER SHAFT (See page PR–8)

8. INSTALL DRAIN PLUG AND NEW GASKET
Torque: 20 N·m (205 kgf·cm, 15 ft·lbf)

9. FILL ATF AND CHECK FLUID LEVEL (See page DI–456)

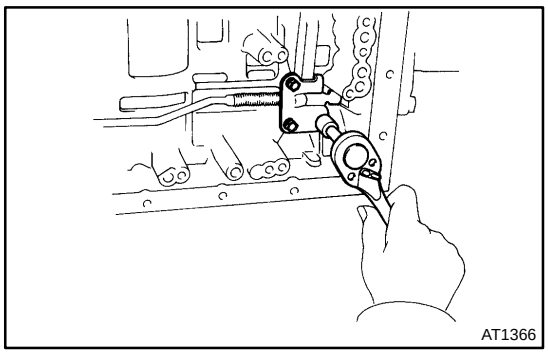

PARKING LOCK PAWL

AT00X–02

ON–VEHICLE REPAIR

1. **REMOVE VALVE BODY (See page AT–10)**
2. **REMOVE PARKING LOCK PAWL BRACKET**

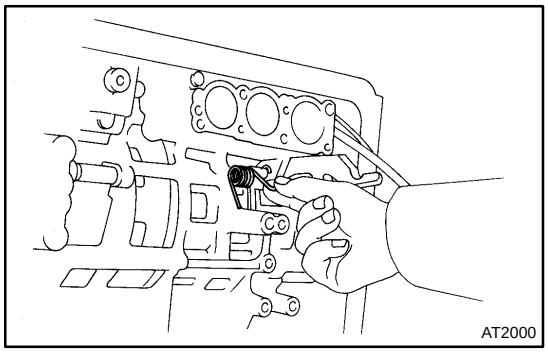

3. **REMOVE SPRING FROM PARKING LOCK PAWL SHAFT**

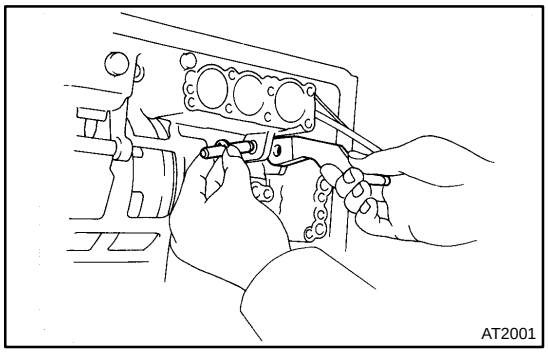

4. **REMOVE PARKING LOCK PAWL AND SHAFT**
5. **INSTALL PARKING LOCK PAWL AND SHAFT**

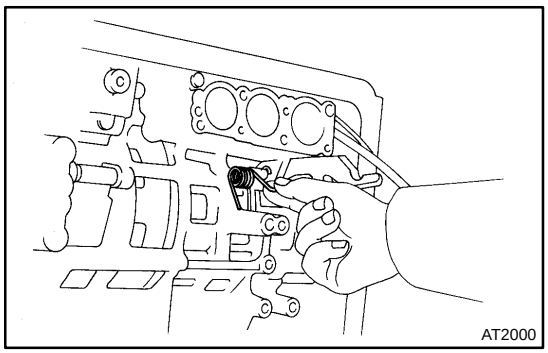

6. **INSTALL SPRING TO PARKING LOCK PAWL SHAFT**

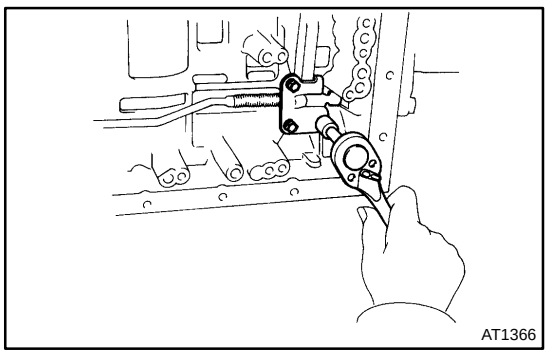

7. **INSTALL PARKING LOCK PAWL BRACKET**
   Torque: 7.4 N·m (75 kgf·cm, 65 in.·lbf)

HINT:

- Push the lock rod fully forward.
- Check that the parking lock pawl operates smoothly.

8. **INSTALL VALVE BODY (See page AT–10)**

PARK/NEUTRAL POSITION (PNP) SWITCH

AT00W–02

ON–VEHICLE REPAIR

1. DISCONNECT 2 OIL COOLER PIPES
(See page A340E: AT–24, A340F: AT–30)

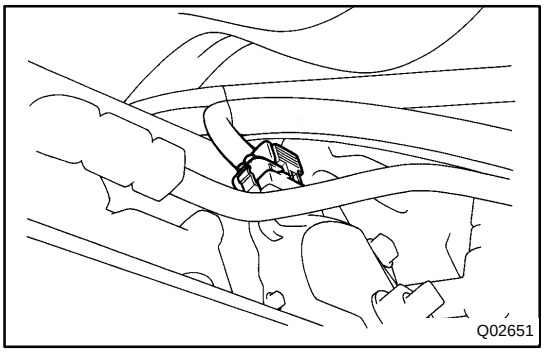

2. DISCONNECT PARK/NEUTRAL POSITION SWITCH CONNECTOR

3. REMOVE PARK/NEUTRAL POSITION SWITCH

(a) Pry off the lock washer and remove the nut.

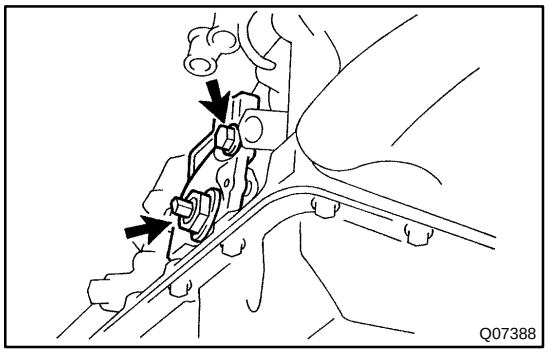

(b) Remove the bolt and pull out the park/neutral position switch.

4. INSTALL AND ADJUST PARK/NEUTRAL POSITION SWITCH (See page DI–456)
Torque:
Nut: 6.9 N·m (70 kgf·cm, 61 in.·lbf)
Bolt: 13 N·m (130 kgf·cm, 9 ft·lbf)

5. CONNECT PARK/NEUTRAL POSITION SWITCH CONNECTOR

6. CONNECT 2 OIL COOLER PIPES
(See page A340E: AT–24, A340F: AT–30)

SENSOR ROTOR (A340E)

AT07E–02

ON–VEHICLE REPAIR

1. REMOVE PROPELLER SHAFT (See page PR–3)

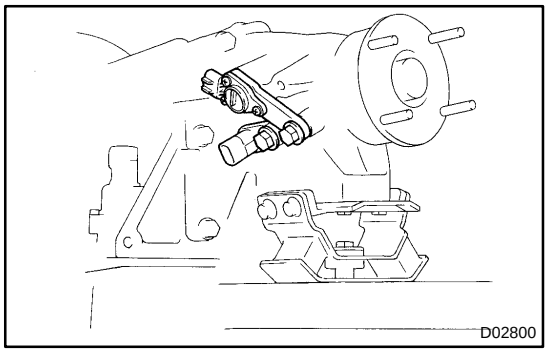

2. REMOVE NO.1 AND NO.2 VEHICLE SPEED SENSORS (See page AT–7)

3. JACK UP TRANSMISSION SLIGHTLY

Securely support the transmission on a transmission jack. Lift the transmission slightly from the crossmember.

4. REMOVE CROSSMEMBER

(a) Disconnect the crossmember from the O–ring.

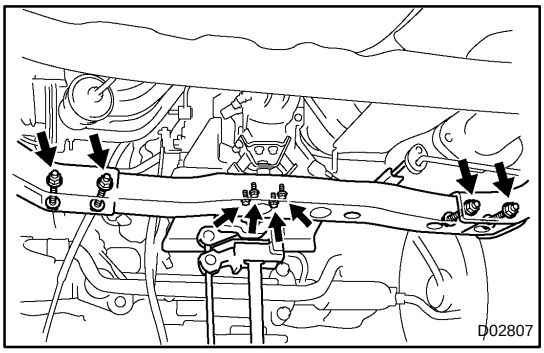

(b) Remove the 4 bolts on the rear mounting side from the engine rear mounting insulator.

(c) Remove the 4 nuts, bolts, washers and crossmember.

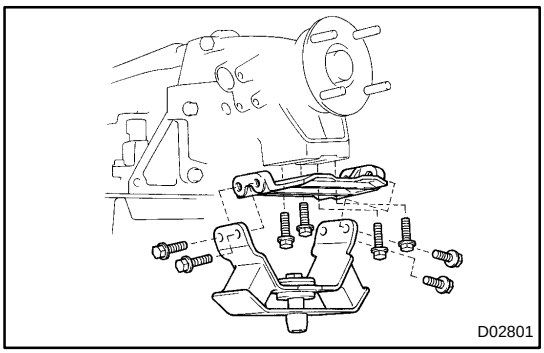

5. REMOVE ENGINE REAR MOUNTING INSULATOR AND ENGINE MOUNTING SPACER

(a) Remove the 4 bolts and engine rear mounting insulator from the engine mounting spacer.

(b) Remove the 4 bolts and engine mounting spacer from the transmission.

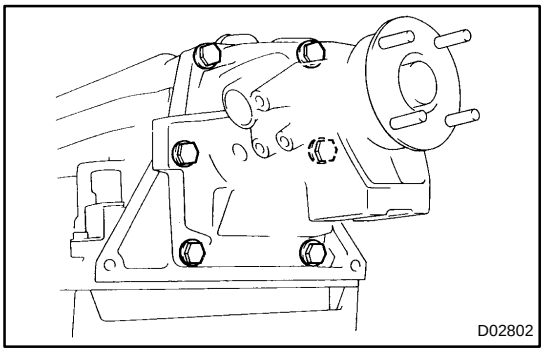

6. REMOVE EXTENSION HOUSING AND GASKET

Remove the 6 bolts, gasket and extension housing.

If necessary, tap the extension housing with a plastic hammer or a block of wood to loosen it.

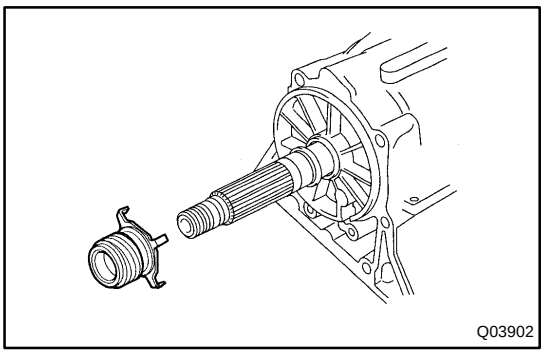

7. REMOVE SPEEDOMETER DRIVE GEAR AND SENSOR ROTOR

Remove the speedometer drive gear and sensor rotor from the output shaft.

8. INSTALL SPEEDOMETER DRIVE GEAR AND SENSOR ROTOR

Install the speedometer drive gear and sensor rotor to the output shaft.

9. INSTALL EXTENSION HOUSING AND GASKET

(a) Apply sealant or equivalent to the bolt threads.
Sealant:
Part No. 08833 – 00080, THREE BOND 1344, LOCTITE 242 or equivalent

(b) Install the extension housing with a new gasket to the case.

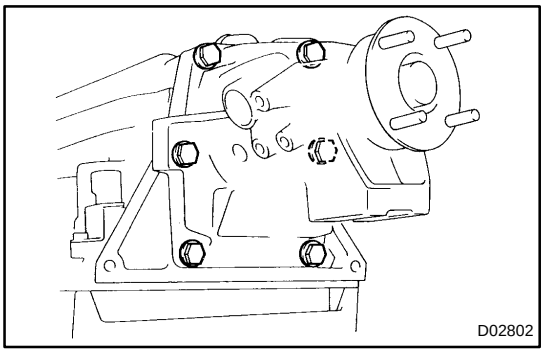

(c) Install and torque the 6 bolts.
Torque: 36 N·m (370 kgf·cm, 27 ft·lbf)

HINT:
The 2 lower bolts are shorter.

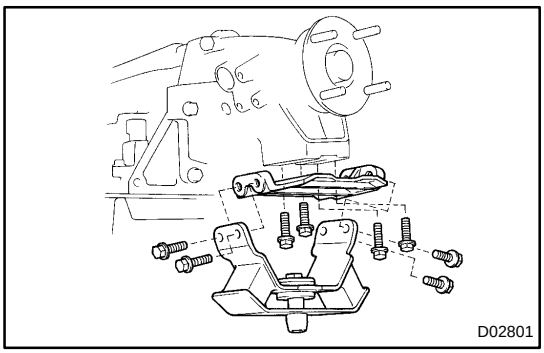

10. INSTALL ENGINE REAR MOUNTING INSULATOR AND ENGINE MOUNTING SPACER

(a) Install the 4 bolts and engine mounting spacer to the transmission.
Torque: 28.5 N·m (291 kgf·cm, 21 ft·lbf)

(b) Install the 4 bolts and engine rear mounting to the engine mounting spacer.
Torque: 65 N·m (660 kgf·cm, 48 ft·lbf)

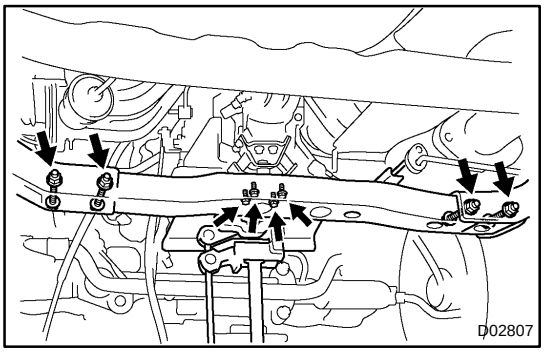

11. INSTALL CROSSMEMBER

(a) Install the 4 nuts, bolts, washers and crossmember.
Torque: 72 N·m (734 kgf·cm, 53 ft·lbf)

(b) Install the 4 bolts on the rear mounting side to the engine rear mounting insulator.
Torque: 18.5 N·m (189 kgf·cm, 14 ft·lbf)

(c) Connect the crossmember to the O–ring.

12. INSTALL NO.1 AND NO.2 VEHICLE SPEED SENSORS (See page AT–7)

13. INSTALL PROPELLER SHAFT (See page PR–8)

AT0YV–01

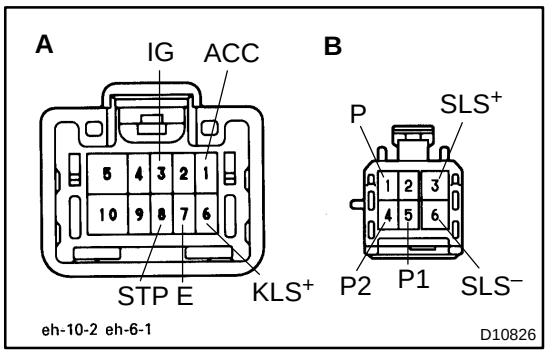

INSPECTION

1. INSPECT SHIFT LOCK CONTROL ECU

Using a voltmeter, measure the voltage at each terminal.

HINT:

Do not disconnect the ECU connector.

Terminal (Symbols)	Measuring Condition	Voltage (V)
A1 (ACC) – A7 (E)	Ignition switch ACC	10 – 14
A3 (IG) – A7 (E)	Ignition switch ON	10 – 14
A8 (STP) – A7 (E)	Depress brake pedal	10 – 14
A6 (KLS^+) – A7 (E)	1. Ignition switch ACC and P position	0
	2. R, N, D, 2, L position	7.5 – 11
	3. R, N, D, 2, L position (After–approx. 1 second)	6 – 9.5
B3 (SLS^+) – B6 (SLS^-)	1. Ignition switch ON and P position	0
	2. Depress brake pedal	8 – 13.5
	3. Depress brake pedal (After–approx. 20 seconds)	6 – 8.5
	4. R, N, D, 2, L position	0
B5 (P1) – B1 (P)	1. Ignition switch ON, P position and depress brake pedal	0
	2. R, N, D, 2, L position	9 – 13.5
B4 (P2) – B1 (P)	1. Ignition switch ACC and P position	9 – 13.5
	2. R, N, D, 2, L position	0

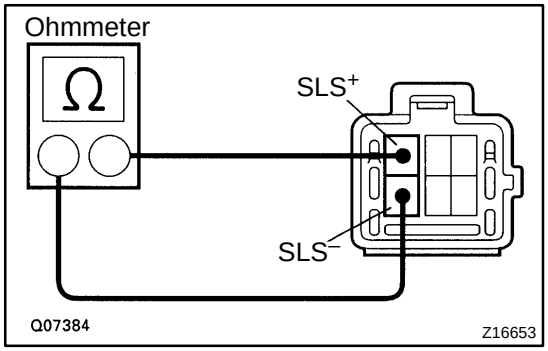

2. INSPECT SHIFT LOCK SOLENOID

(a) Disconnect the solenoid connector.

(b) Using an ohmmeter, measure the resistance at each terminal.

Standard resistance: 20 – 28 Ω

If resistance value is not as specified, replace the solenoid.

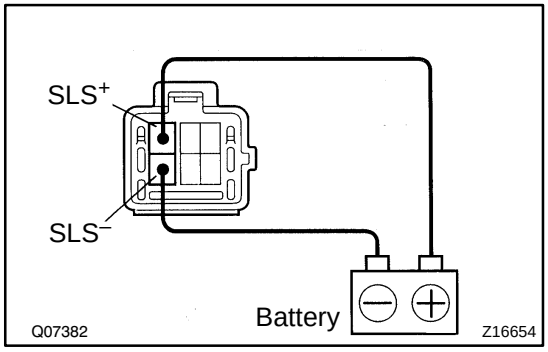

(c) Apply battery positive voltage at each terminal. At this time, check that the solenoid operates.

If the solenoid does not operate, replace the solenoid.

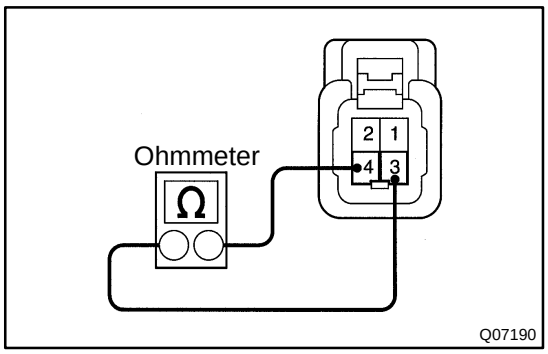

3. INSPECT KEY INTERLOCK SOLENOID

(a) Disconnect the solenoid connector.

(b) Using an ohmmeter, measure the resistance between terminals 3 and 4.

Standard resistance: 12 – 17 Ω

If resistance value is not as specified, replace the solenoid.

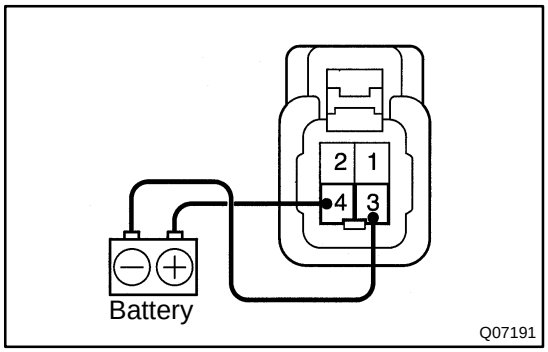

(c) Touch the solenoid with your finger and check that solenoid operation can be felt when battery positive voltage is applied intermittently to the terminals 1 and 2.

If the solenoid does not operate, replace the solenoid.

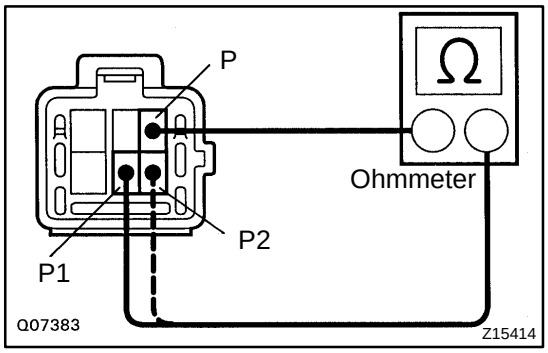

4. INSPECT SHIFT LOCK CONTROL SWITCH

Inspect that there is continuity between each terminal.

Shift position	Tester connection	Specified value
*1 P position	P1 – P or E	Continuity
*2 P position	P1 – P or E P2 – P or E	Continuity
R, N, D, 2, L position	P2 – P or E	Continuity

*1: Floor shift release button is not pushed.

*2: Floor shift release button is pushed.

If the continuity is not as specified, replace the switch.

SHIFT LOCK SYSTEM

AT00Z–03

LOCATION

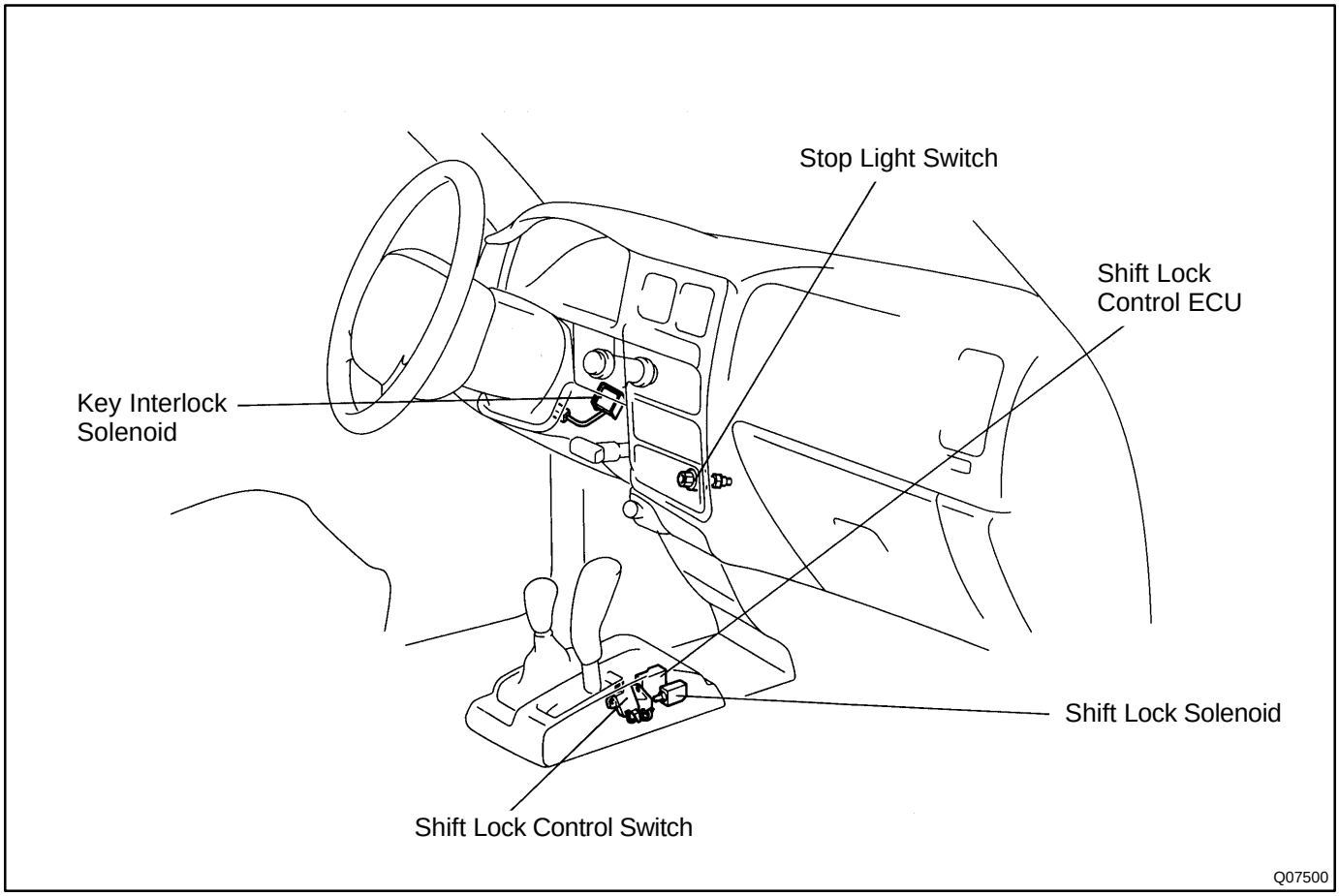

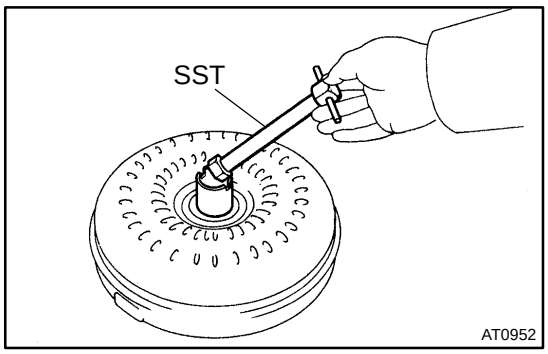

TORQUE CONVERTER CLUTCH AND DRIVE PLATE

AT00O–05

INSPECTION

1. INSPECT ONE–WAY CLUTCH

(a) Install SST in the inner race of one–way clutch.
SST 09350–30020 (09351–32010)

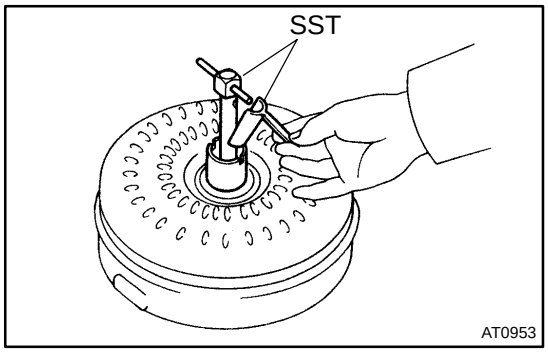

(b) Install SST so that it fits in the notch of the converter hub and outer race of the one–way clutch.
SST 09350–30020 (09351–32010 09351–32020)

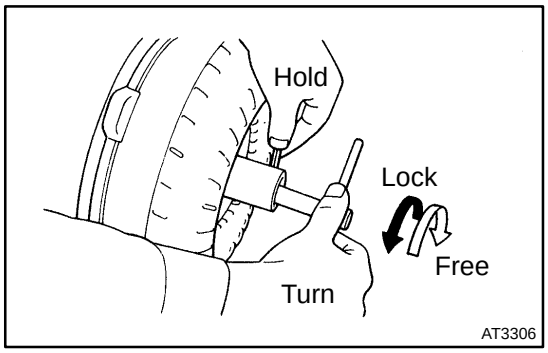

(c) With the torque converter clutch standing on its side, check that the clutch locks when turned counterclockwise, and rotates freely and smoothly clockwise.

If necessary, clean the converter clutch and retest the clutch. Replace the converter clutch if the clutch still fails the test.

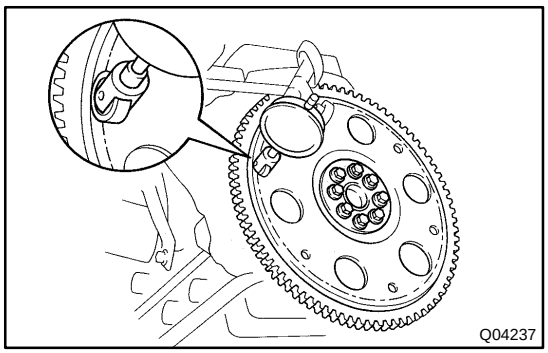

2. MEASURE DRIVE PLATE RUNOUT AND INSPECT RING GEAR

Set up a dial indicator, measure drive plate runout.

Maximum runout: 0.20 mm (0.0079 in.)

If runout is not within the specification, replace the drive plate. If installing a new drive plate, note the orientation of spacers and tight the bolts.

Torque:
3RZ–FE: 74 N·m (750 kgf·cm, 54 ft·lbf)
5VZ–FE: 83 N·m (850 kgf·cm, 61 ft·lbf)

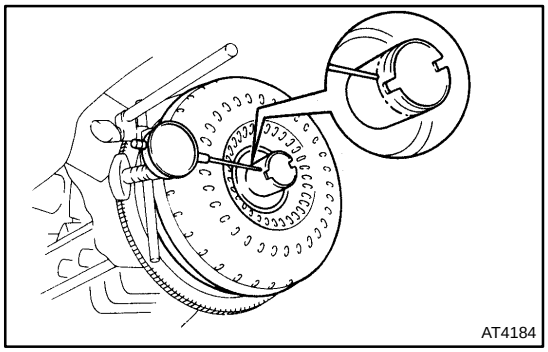

3. MEASURE TORQUE CONVERTER CLUTCH SLEEVE RUNOUT

Temporarily mount the torque converter clutch to the drive plate. Set up a dial indicator.

Maximum runout: 0.30 mm (0.0118 in.)

If runout is not within the specification, try to correct by reorienting the installation of the torque converter clutch.

HINT:

Mark the position of the torque converter clutch to ensure correct installation.

THROTTLE CABLE

AT00Y–04

ON–VEHICLE REPAIR

1. DISCONNECT THROTTLE CABLE

(a) Disconnect the cable from the throttle linkage.

(b) Disconnect the cable from the cable clamps in the engine compartment.

(c) Remove the bolt and disconnect the cable clamp from the torque converter clutch housing.

2. REMOVE VALVE BODY (See page AT–10)

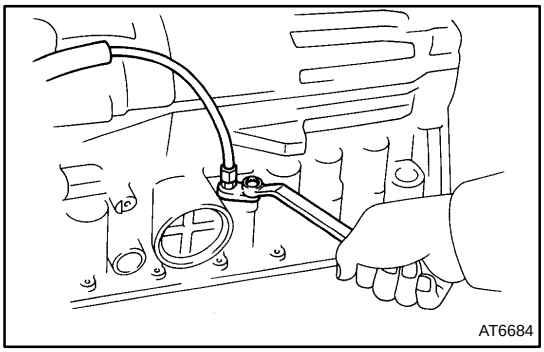

3. REMOVE THROTTLE CABLE

Remove the retaining bolt and pull out the throttle cable.

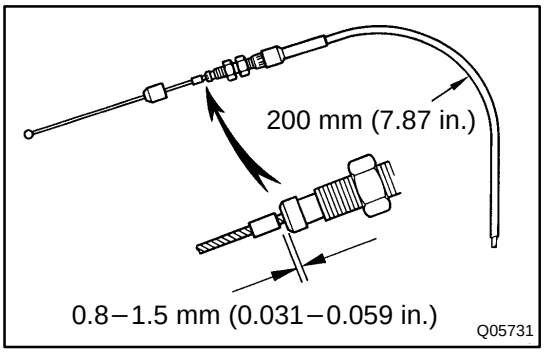

4. INSTALL THROTTLE CABLE

If the throttle cable is new, perform the following operations (a) – (c).

(a) Bend the cable so that there is radius of about 200 mm (7.87 in.).

(b) Pull the inner cable lightly until the resistance is slightly felt, and hold it there.

(c) Stake the stopper, 0.8 – 1.5 mm (0.031 – 0.059 in.) from the end of the outer cable.

(d) Install a new O–ring to the throttle cable.

(e) Pull the throttle cable and install the retaining bolt.
Torque: 10 N·m (100 kgf·cm, 7 kgf·cm)

5. INSTALL VALVE BODY (See page AT–10)

6. CONNECT THROTTLE CABLE TO ENGINE

7. INSTALL DRAIN PLUG
Torque: 20 N·m (205 kgf·cm, 15 ft·lbf)

8. FILL ATF AND CHECK FLUID LEVEL (See page DI–456)

9. ADJUST THROTTLE CABLE (See page DI–456)

VALVE BODY ASSEMBLY

AT12U–01

ON–VEHICLE REPAIR

CAUTION:

When working with FIPG material, you must observe the followings.

- **Using a razor blade and a gasket scraper, remove all old FIPG material from the gasket surfaces.**
- **Thoroughly clean all components to remove all loose material.**
- **Clean both sealing surfaces with a non–residue solvent.**
- **Apply FIPG in an approx. 1 mm (0.04 in.) wide bead along the sealing surface.**
- **Parts must be assembled within 10 minutes of application. Otherwise, the FIPG material must be removed and reapplied.**

1. REMOVE DRAIN PLUG AND DRAIN ATF

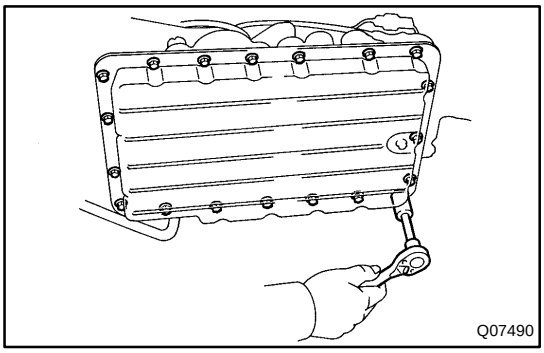

2. REMOVE OIL PAN

NOTICE:

Some fluid will remain in the oil pan.

(a) Remove the 19 bolts.

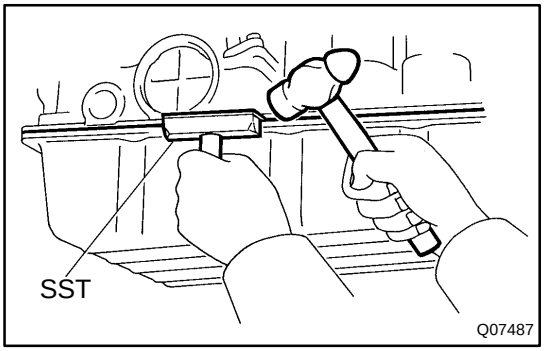

(b) Install the blade of SST between the transmission case and oil pan, cut off applied sealer, and remove the oil pan.
SST 09032–00100

NOTICE:

When removing the oil pan, be careful not to damage the oil pan flange.

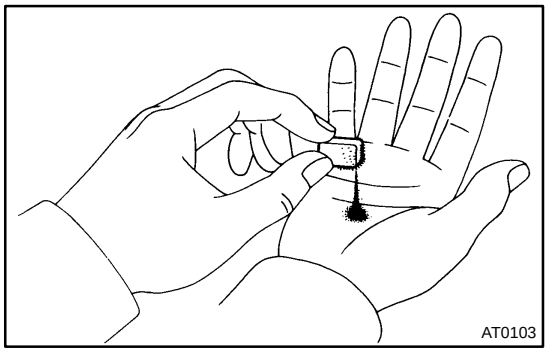

3. EXAMINE PARTICLES IN PAN

Remove the magnets and use them to collect steel particles. Carefully look at the foreign matter and particles in the pan and on the magnets to anticipate the type of wear you will find in the transmission.

Steel (magnetic) ... bearing, gear and clutch plate wear

Brass (non–magnetic) ... bushing wear

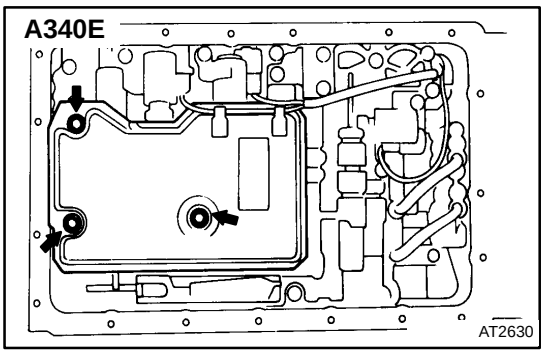

4. A340E:
REMOVE OIL STRAINER

NOTICE:

Be careful as some fluid will come out of the oil strainer.

(a) Separate the solenoid wire.

(b) Remove the 3 bolts, oil strainer and 2 gaskets.

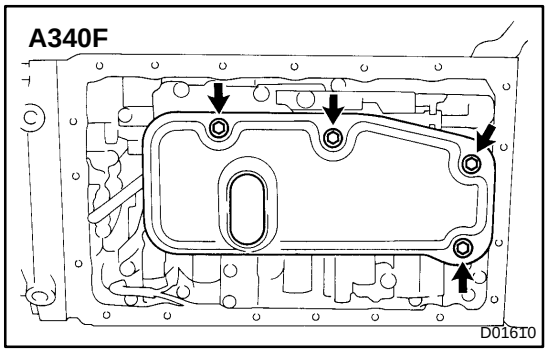

5. A340F:
REMOVE OIL STRAINER

Remove the 4 bolts, oil strainer and 3 gaskets.

NOTICE:

Be careful as some fluid will come out of the oil strainer.

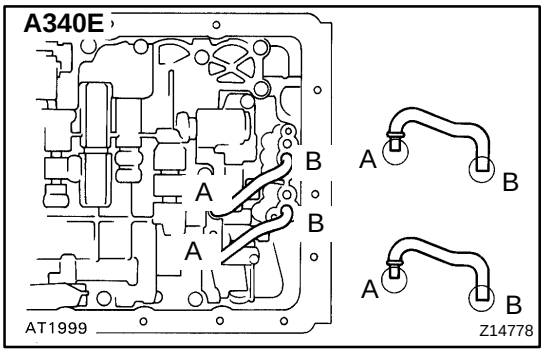

6. A340E:
REMOVE OIL PIPE

Pry up both pipe ends with a large screwdriver and remove the 2 pipes.

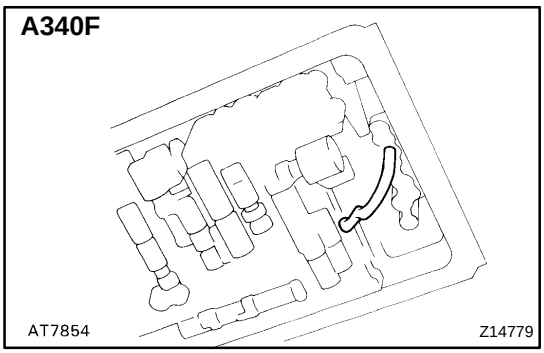

7. A340F:
REMOVE OIL PIPE

Pry up both pipe ends with a large screwdriver and remove the pipe.

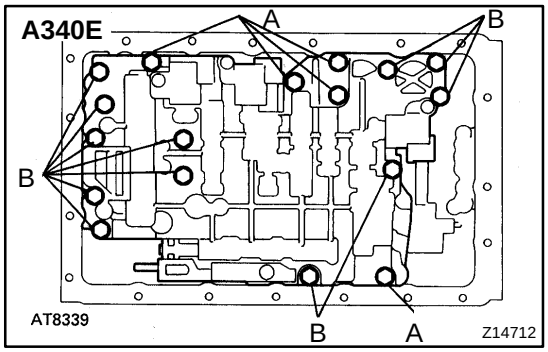

8. 3RZ–FE:
REMOVE VALVE BODY

(a) Disconnect the 3 connectors from each shift solenoid valves.

(b) A340E:
Remove the 17 bolts.
Bolt length:
Bolt A: 23 mm (0.91 in.)
Bolt B: 32 mm (1.26 in.)

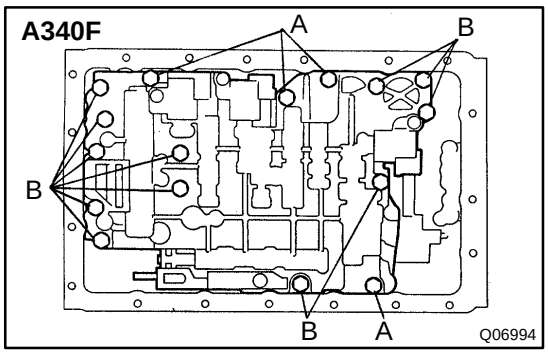

(c) A340F:
Remove the 16 bolts.
Bolt length:
Bolt A: 23 mm (0.91 in.)
Bolt B: 32 mm (1.26 in.)

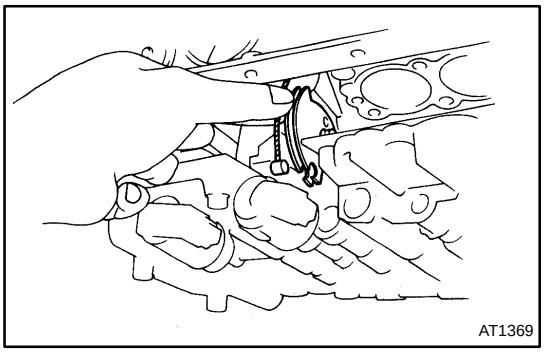

(d) Disconnect the throttle cable from the cam.
(e) Remove the valve body.

NOTICE:
Be careful not to drop the check ball body and spring.

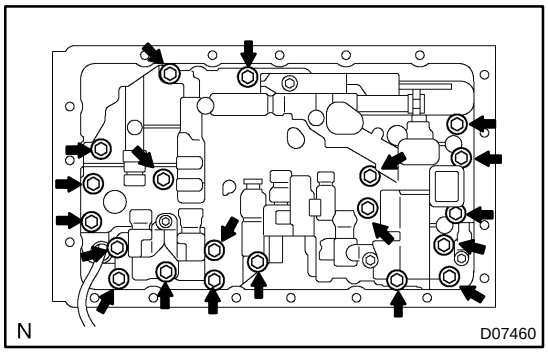

9. 5VZ–FE:
REMOVE VALVE BODY

(a) Disconnect the 4 connectors from each shift solenoid valves.
(b) Remove the 20 bolts and valve body.

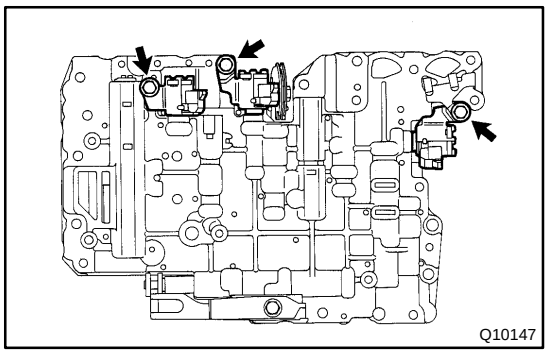

10. 3RZ–FE:
REMOVE SHIFT SOLENOID VALVE

(a) Remove the solenoid valve mounting bolts.
(b) Remove the 3 solenoid valves.
(c) Remove the 3 O–rings from the solenoid valves.

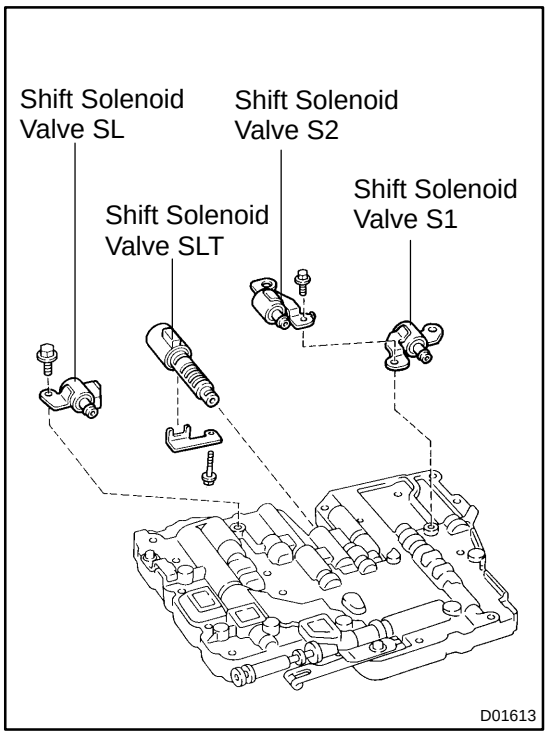

11. 5VZ–FE:
REMOVE SHIFT SOLENOID VALVE

(a) Remove the 2 bolts and 3 shift solenoid valves.
(b) Turn the valve body, remove the bolt, lock plate and shift solenoid valve.
(c) Remove the 3 O–rings from the 3 solenoid valves.

12. 5VZ–FE:
REMOVE DETENT SPRING

13. 5VZ–FE:
REMOVE MANUAL VALVE

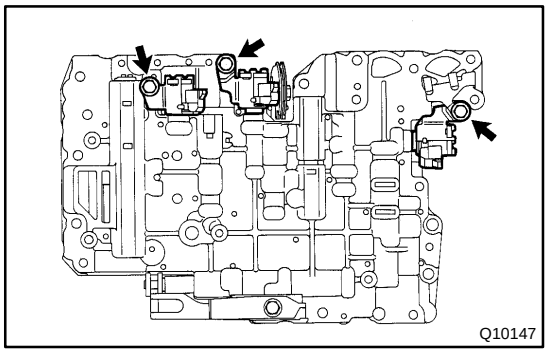

14. 3RZ–FE:
INSTALL SHIFT SOLENOID VALVE

(a) Coat the 3 new O–rings with ATF.
(b) Install the 3 O–rings to the shift solenoid valves.
(c) Install the 3 shift solenoid valves with the 3 bolts.
Torque: 10 N·m (100 kgf·cm, 7 ft·lbf)

15. 5VZ–FE:
INSTALL MANUAL VALVE

16. 5VZ–FE:
INSTALL DETENT SPRING
Torque: 10 N·m (100 kgf·cm, 7 ft·lbf)

17. 5VZ–FE:
INSTALL SHIFT SOLENOID VALVE

(a) Install 3 new O–rings to 3 shift solenoid valves.
(b) Install the shift solenoid valve and lock plate with the bolt.
Torque: 10 N·m (100 kgf·cm, 7 ft·lbf)
(c) Install the 3 shift solenoid valves with the 2 bolts.
Torque: 10 N·m (100 kgf·cm, 7 ft·lbf)

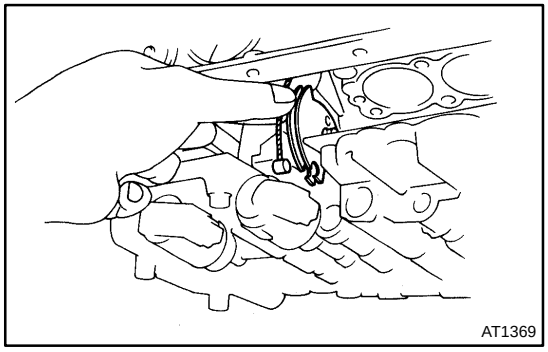

18. 3RZ–FE:
INSTALL VALVE BODY

(a) Align the groove of the manual valve to the pin of the lever.
(b) Connect the throttle cable to the cam.

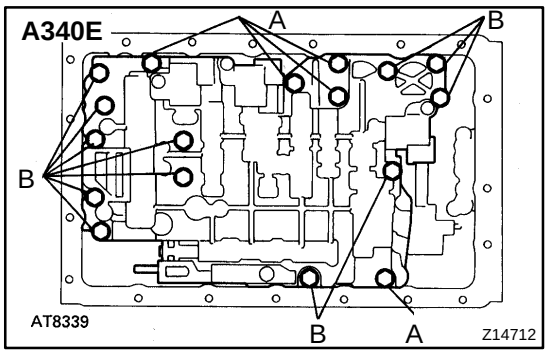

(c) A340E:
Install the 17 bolts.
Torque: 10 N·m (100 kgf·cm, 7 ft·lbf)
Bolt length:
Bolt A: 23 mm (0.91 in.)
Bolt B: 32 mm (1.26 in.)

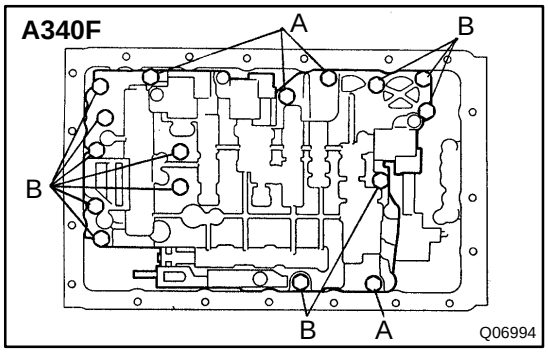

(d) A340F:
Install the 16 bolts.
Torque: 10 N·m (100 kgf·cm, 7 ft·lbf)
Bolt length:
Bolt A: 23 mm (0.91 in.)
Bolt B: 32 mm (1.26 in.)

(e) Connect the 3 connectors to each shift solenoid valves.

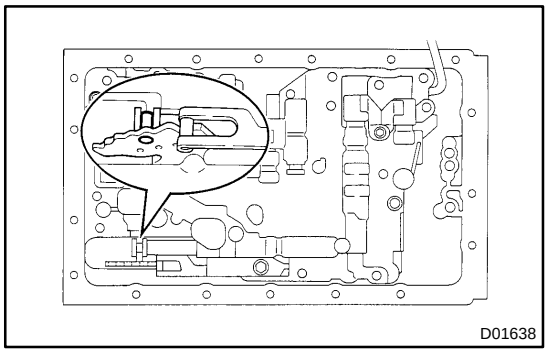

19. 5VZ–FE:
INSTALL VALVE BODY

(a) Align the groove of the manual valve with the pin of the lever.

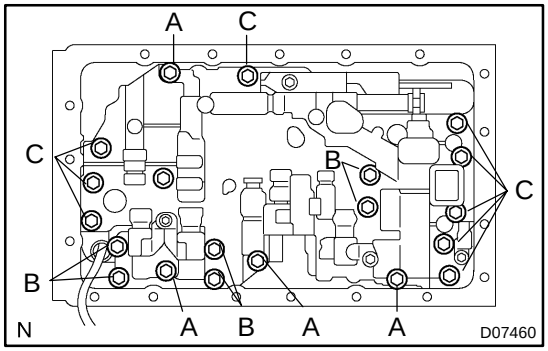

(b) Install the valve body with the 20 bolts.
Torque: 11 N·m (110 kgf·cm, 8 ft·lbf)
Bolt length:
Bolt A: 23 mm (0.91 in.)
Bolt B: 28 mm (1.10 in.)
Bolt C: 36 mm (1.42 in.)

(c) Connect the 4 connectors to each shift solenoid valves.

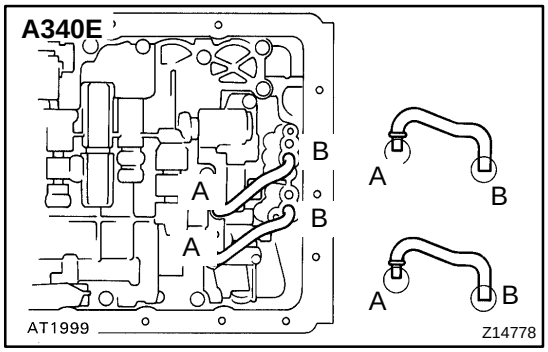

20. A340E:
INSTALL OIL PIPE

Using a plastic hammer, install the 2 pipes into position.

NOTICE:

- **Be careful not to bend or damage the pipes.**
- **Make sure that the oil pipes or magnet do not interfere with the oil pan.**

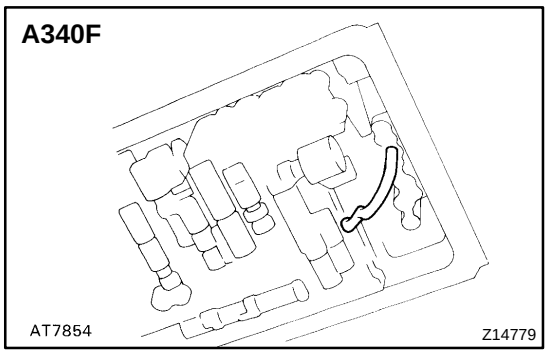

21. A340F:
INSTALL OIL PIPE

Using a plastic hammer, install the pipe into position.

NOTICE:

- **Be careful not to bend or damage the pipe.**
- **Make sure that the oil pipe or magnet do not interfere with the oil pan.**

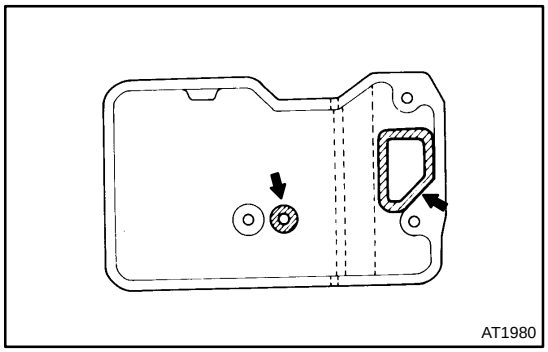

22. A340E:
INSTALL OIL STRAINER

(a) Install 2 new gaskets.

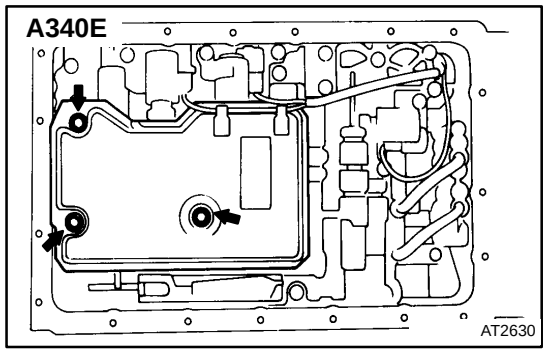

(b) Install the oil strainer with the 3 bolts.
Torque: 10 N·m (100 kgf·cm, 7 ft·lbf)

(c) Clamp solenoid wire.

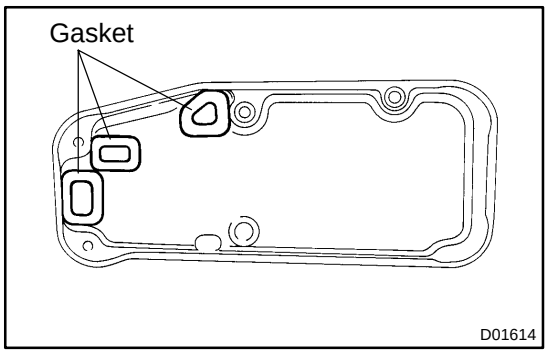

23. A340F:
INSTALL OIL STRAINER

(a) Install 3 new gaskets.

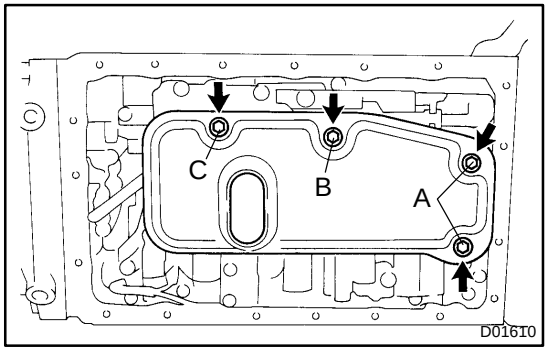

(b) Install the oil strainer with the 4 bolts.
Torque: 10 N·m (100 kgf·cm, 7 ft·lbf)
Bolt length:
Bolt A: 14 mm (0.55 in.)
Bolt B: 20 mm (0.79 in.)
Bolt C: 23 mm (0.91 in.)

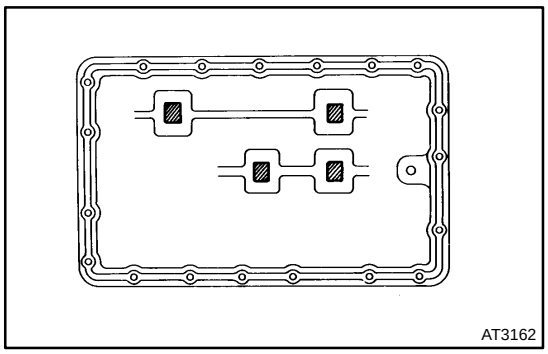

24. INSTALL OIL PAN

(a) A340E:
Install the 4 magnets in the indications of the oil pan.

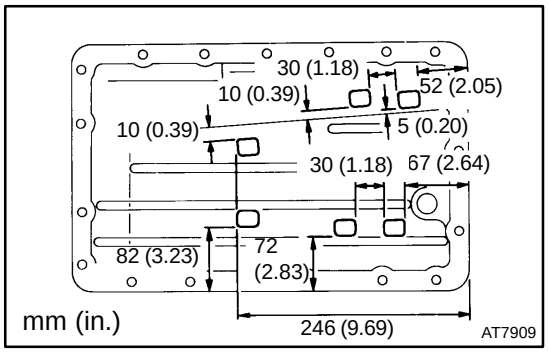

(b) A340F:
Install the 6 magnets in the indications of the oil pan.

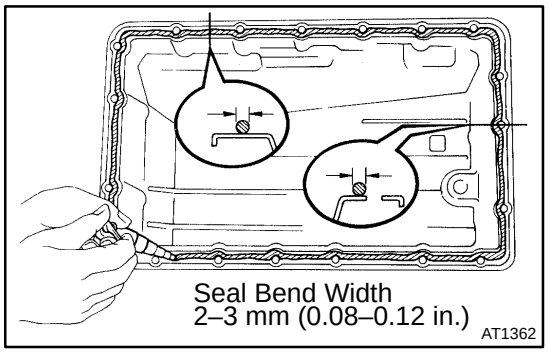

(c) Remove any packing material and be careful not to drop oil on the contacting surfaces of the transmission case and oil pan.

(d) Apply FIPG to the oil pan.
FIPG:
Part No. 08826 – 00090, THREE BOND 1281 or equivalent

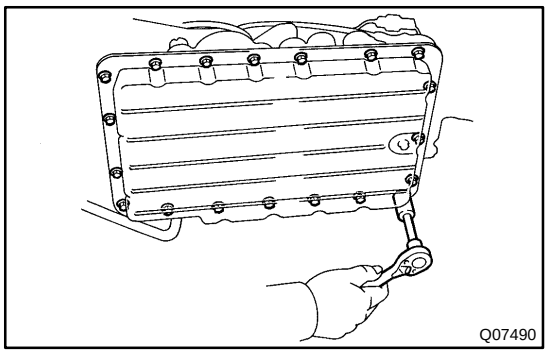

(e) Install the oil pan with the 19 bolts.
Torque: 7.4 N·m (75 kgf·cm, 65 in.·lbf)

25. INSTALL DRAIN PLUG
Torque: 20 N·m (205 kgf·cm, 15 ft·lbf)

26. FILL AND CHECK ATF (See page DI–456)

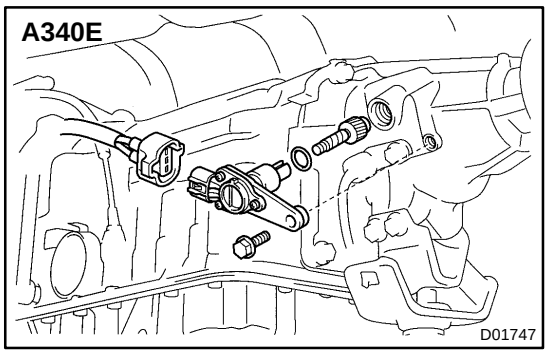

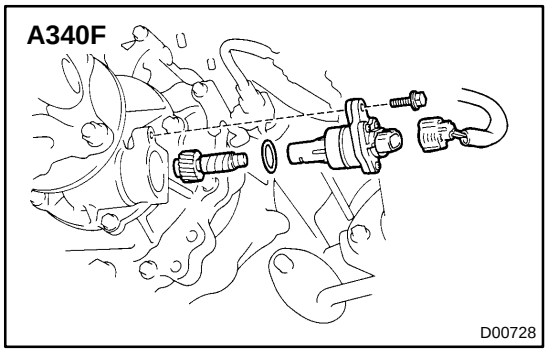

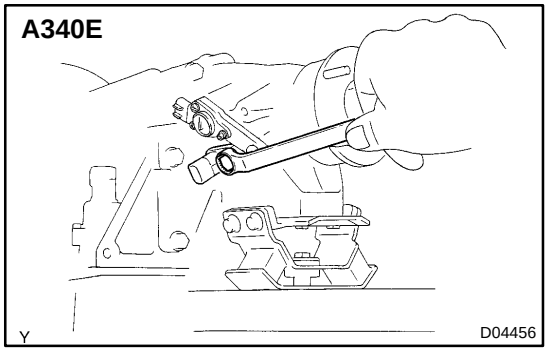

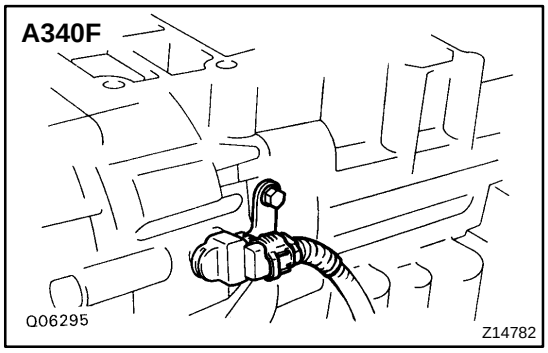

VEHICLE SPEED SENSOR

AT00V–03

ON–VEHICLE REPAIR

1. DISCONNECT NO.1 VEHICLE SPEED SENSOR CONNECTOR

2. REMOVE NO.1 VEHICLE SPEED SENSOR ASSEMBLY

(a) Remove the bolt and No.1 vehicle speed sensor assembly.

(b) Remove the speedometer driven gear and O–ring from the No.1 vehicle speed sensor.

3. INSTALL NO.1 VEHICLE SPEED SENSOR ASSEMBLY

(a) Coat a new O–ring with ATF.

(b) Install the O–ring and speedometer driven gear to the No.1 vehicle speed sensor.

(c) Install the No.1 vehicle speed sensor to the extension housing and torque the bolt.

Torque: 16 N·m (160 kgf·cm, 12 ft·lbf)

4. CONNECT NO.1 VEHICLE SPEED SENSOR CONNECTOR

5. DISCONNECT NO.2 VEHICLE SPEED SENSOR CONNECTOR

6. REMOVE NO.2 VEHICLE SPEED SENSOR

(a) Remove the bolt and No.2 vehicle speed sensor.

(b) Remove the O–ring from the No.2 vehicle speed sensor.

7. INSTALL NO.2 VEHICLE SPEED SENSOR

(a) Coat a new O–ring with ATF and install it to the No.2 vehicle speed sensor.

(b) Install the No.2 vehicle speed sensor and torque the bolt.

Torque: 5.4 N·m (55 kgf·cm, 48 in.·lbf)

8. CONNECT NO.2 VEHICLE SPEED SENSOR CONNECTOR

AUDIO SYSTEM

BE10E–03

DESCRIPTION

1. RADIO WAVE BAND

The radio wave bands used in radio broadcasting are as follows:

Frequency	30 kHz	300 kHz	3 MHz	30 MHz	300 MHz
Designation	LF	MF	HF	VHF	
Radio wave		AM ⟷		FM ⟷	
Modulation	Amplitude modulation			Frequency modulation	

LF: Low Frequency
MF: Medium Frequency
HF: High Frequency
VHF: Very High Frequency

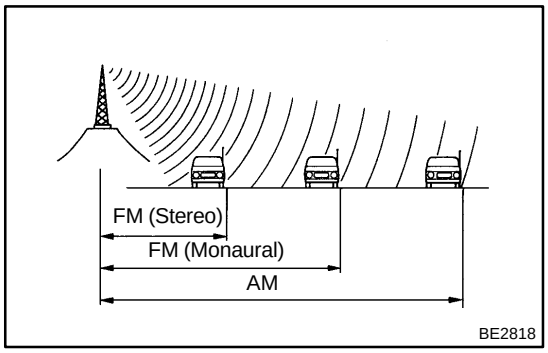

2. SERVICE AREA

There are great differences in the size of the service area for AM and FM monaural. Sometimes FM stereo broadcasts cannot be received even through AM can be received in very clearly.
Not only does FM stereo have the smallest service area, but it also picks up static and other types of interference (”noise”) easily.

3. RECEPTION PROBLEMS

Besides the problem of static, there are also the problems called ”fading”, ”multipath” and ”fade out”. These problems are caused not by electrical noise but by the nature of the radio waves themselves.

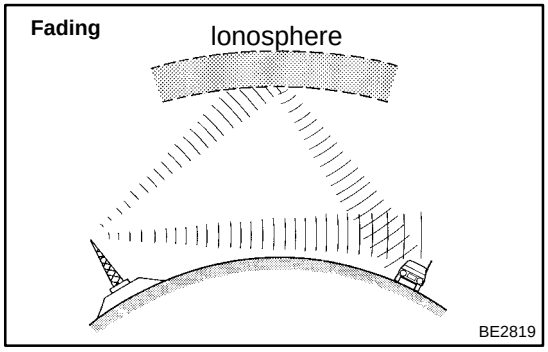

(1) Fading:
Besides electrical interference, AM broadcasts are also susceptible to other types of interference, especially at night. This is because AM radio waves bounce off the ionosphere at night. These radio waves then interfere with the signals from the same transmitter that reach the vehicle’s antenna directly. This type of interference is called ”fading”.

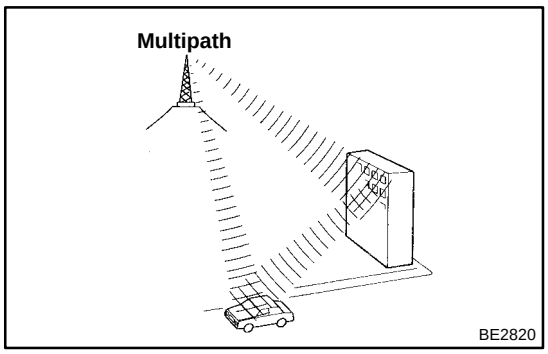

(2) Multipath:
One type of interference caused by the bounce of radio waves off of obstructions is called ”multipath”. Multipath occurs when a signal from the broadcast transmitter antenna bounces off buildings and mountains and interferes with the signal that is received directly.

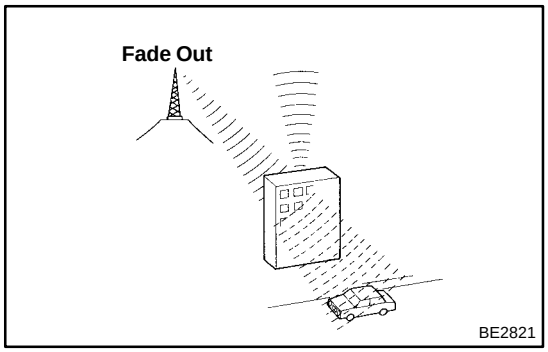

(3) Fade Out:
Because FM radio waves are of higher frequencies than AM radio waves, they bounce off buildings, mountains, and other obstructions. For this reason, FM signals often seem to gradually disappear or fade away as the vehicle goes behind a building or other obstruction. This is called ”fade out”.

4. COMPACT DISC PLAYER

Compact Disc Players use a laser beam pick–up to read the digital signals recorded on the CD and reproduce analog signals of the music, etc.

HINT:

Never attempt to disassemble or oil any part of the player unit. Do not insert any object other than a disc into the magazine.

NOTICE:

CD players use an invisible laser beam which could cause hazardous radiation exposure. Be sure to operate the player correctly as instructed.

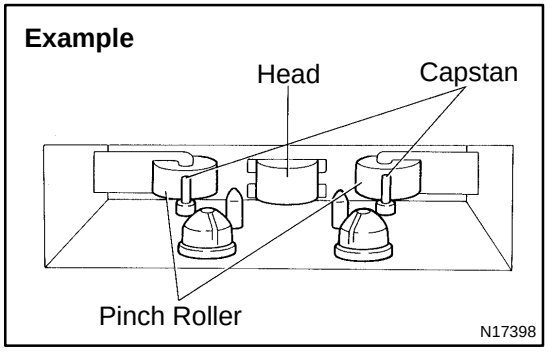

5. Tape player/head cleaning:
MAINTENANCE

(a) Raise the cassette door with your finger.
Next, using a pencil or similar object, push in the guide.

(b) Using a cleaning pen or cotton applicator soaked in cleaner, clean the head surface, pinch rollers and capstans.

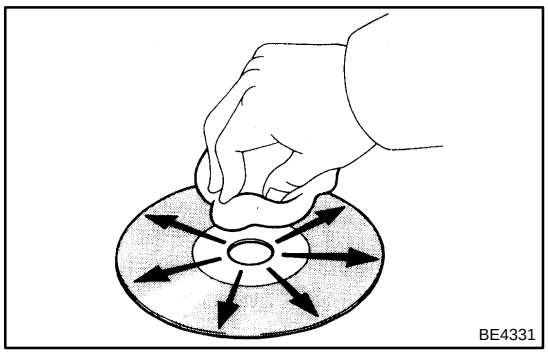

6. CD player/disc cleaning: MAINTENANCE

If the disc gets dirty, clean the disc by wiping the surface from the center to outside in the radial directions with a soft cloth.

NOTICE:

Do not use a conventional record cleaner or anti–static preservative.

7. OUTLINE OF AVC–LAN

(a) What is AVC–LAN?

AVC–LAN is the abbreviation, which stands for Audio Visual Communication–Local Area Network. This is a unified standard co–developed by 6 audio manufactures associated with Toyota Motor Corporation.

The Unified standard covers signals, such as audio signal, visual signal, signal for switch indication and communication signal.

(b) Objectives

Recently the car audio system has been rapidly developed and functions have been changed drastically. The conventional system has been switched to the multi–media type such as a navigation system. At the same time the level of customers needs to audio system has been upgraded. This lies behind this standardization.

The concrete objectives are explained below.

(1) When products by different manufactures were combined together, there used to be a case that malfunction occurred such as sound did not come out. This problem has been resolved by standardization of signals.

(2) Various types of after market products have been able to add or replace freely.

(3) Because of the above (2), each manufacture has become able to concentrate on developing products in their strongest field. This has enabled many types of products provided inexpensively.

(4) Conventionally, a new product developed by a manufacture could not be used due to a lack of compatibility with other manufactures products. Because of this new standard, users can enjoy compatible products provided for them timely.

(c) The above descriptions are the objectives to introduce AVC–LAN. By this standardization, development of new products will no longer cause systematic errors. Thus, this is very effective standard for a product in the future.

HINT:

- When +B short or GND short is detected in AVC–LAN circuit, communication stops. Accordingly the audio system does not function normally.
- When audio system is not equipped with a navigation system, audio head unit is the master unit. (When audio system is equipped with a navigation system, radio receiver is the master unit.)
- The car audio system using AVC–LAN circuit has a diagnosis function.
- Each product has its own specified numbers called physical address. Numbers are also allotted to each function in one product, which are called logical address.

BE24S–01

INSPECTION

INSPECT RADIO RECEIVER ASSEMBLY CIRCUIT

Connect the connectors to the radio receiver assembly, and inspect the connector on the wire harness side.

Radio Receiver Side

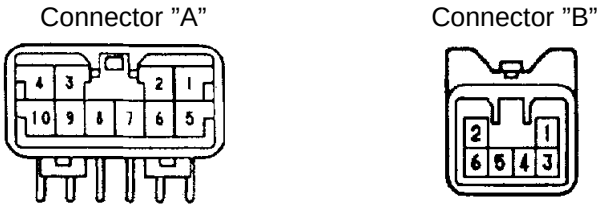

I12416

Tester connection	Condition	Specified condition
A1 – Ground (FR+)	Audio sounding	5 – 7 V
A2 – Ground (FL+)	Audio sounding	5 – 7 V
A3 – Ground (ACC)	Ignition switch ACC	Battery positive voltage
A4 – Ground (+B)	Constant	Battery positive voltage
A5 – Ground (FR–)	Audio sounding	5 – 7 V
A6 – Ground (FL–)	Audio sounding	5 – 7 V
A7 – Ground (GND)	Constant	Continuity
A10 – Ground (ILL+)	Light control switch TAIL or HEAD	Battery positive voltage
B1 – Ground (RR+)	Audio sounding	5 – 7 V
B2 – Ground (RL+)	Audio sounding	5 – 7 V
B3 – Ground (RR–)	Audio sounding	5 – 7 V
B6 – Ground (RL–)	Audio sounding	5 – 7 V

If the circuit is not as specified, inspect the circuits connected to other parts.

BE24P–01

LOCATION

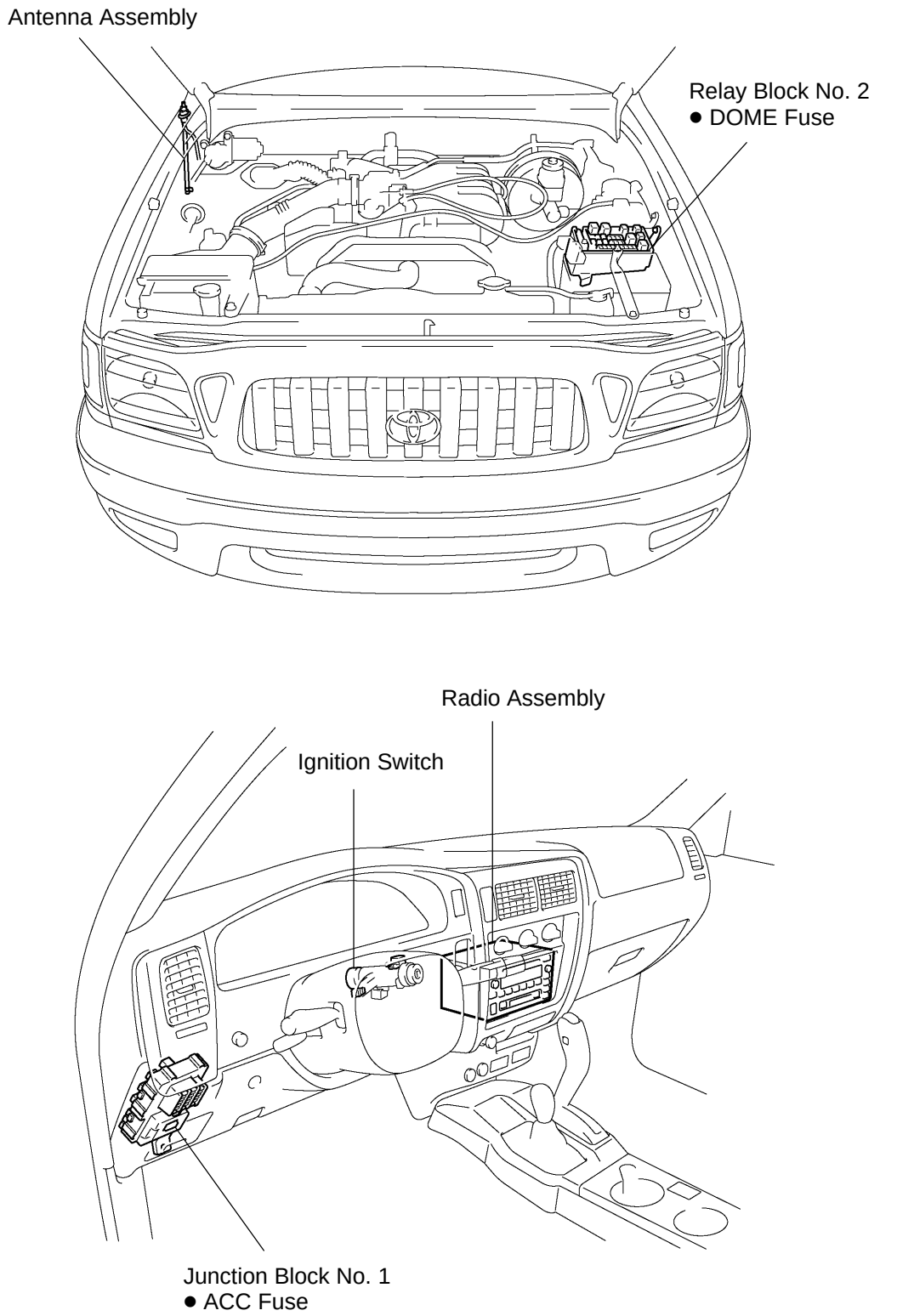

Y

I21680

Regular Cab

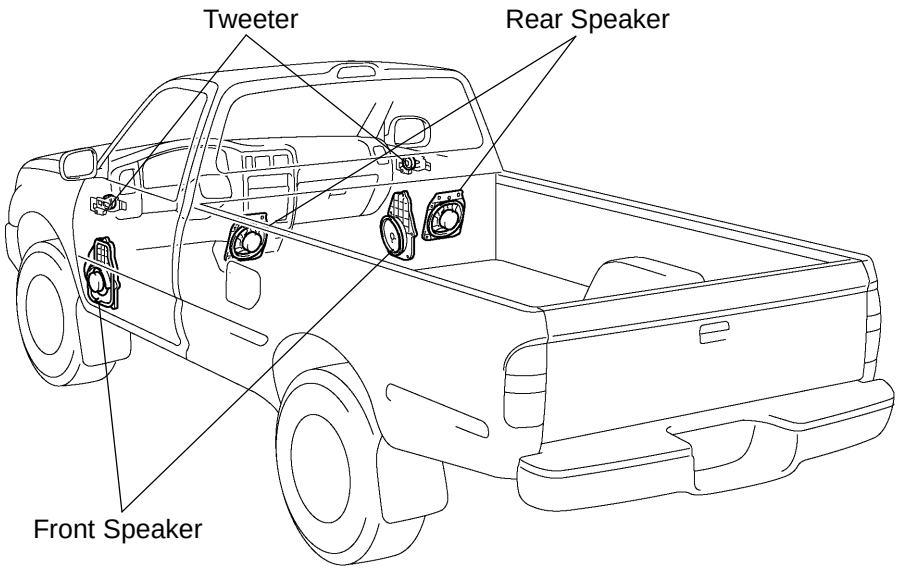

Extra Cab

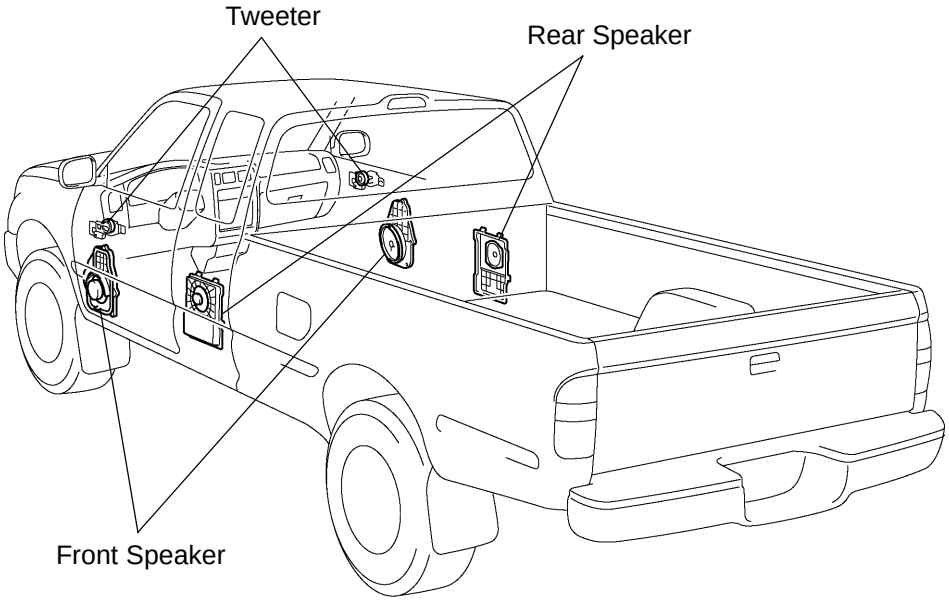

Double Cab

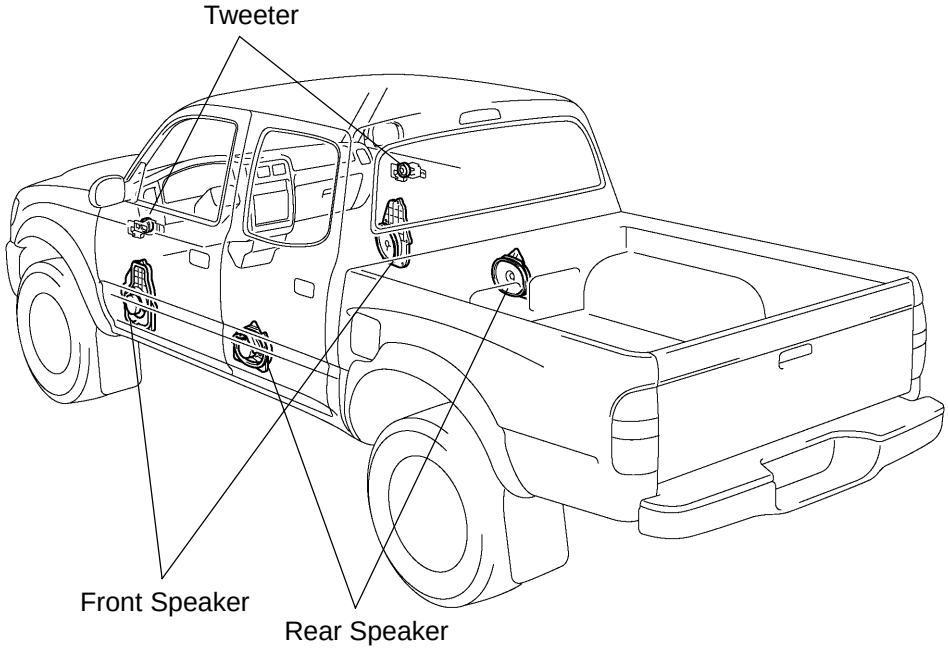

Y

I21681

BE24O–01

TROUBLESHOOTING

1. DIAGNOSIS FUNCTION

(a) Diagnosis start–up

For shifting to diagnosis mode, push ”CD” button 3 times with pressing ”1” and ”6” of TRUCK TUNE APS button at the same time while the audio power is OFF and ACC is ON.

In diagnosis mode, by pressing ”CD” button for 2 seconds or turning the ignition key OFF, the diagnosis mode is released.

<Example>

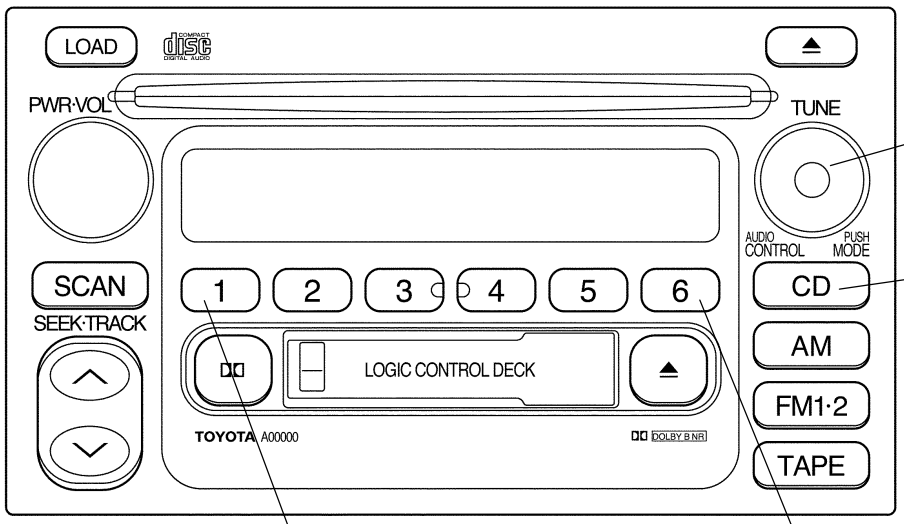

P

I21741

(b) Service check mode

(1) After the diagnosis start–up, the system enters service check mode when ”TUNE UP” switch is pressed.

(2) Error codes over tuner and connected equipment are displayed on the screen of tuner.
Results for each check are displayed as follows:

- good:
  No DTC is detected for both ”System Check Confirmation” and ”Diagnosis Memory Response”.
- nCon:
  The Component does not respond to the ”Diagnosis On Instruction” command.
  Applicable to only the system where connected components are limited to be used.
- ECHn:
  Application of new version has been confirmed by the ”Diagnosis On Check”, and there is one or more DTC which indicates ”Replacement” in the ”System Check Result Response” or ”Diagnosis Memory Response”.
- CHEC:
  Application of new version has been confirmed by the ”Diagnosis On Check”, and there is no DTC which indicates ”Replacement” in the ”System Check Result Response” or ”Diagnosis Memory Response”, but one or more DTC which indicated ”Check” is identified.
- Old:
  Application of old version is confirmed by the ”Diagnosis On Check”, and DTC is identified in the ”System Check Result Response” or ”Diagnosis Memory Response”.

- nrES:
  No response is identified to the ”System Check Start Instruction” and ”Request for System Check Result” commands.

HINT:

- Check the present and past condition of components by performing the System Check and collecting stored DTC memories.
- Check results shall be displayed as one of six following indications: ”good”, ”ECHn”, ”CHEC”,”nCon”, ”Old” or ”nrES”.

(c) Display Screen for Service Check.

Example:

Connection parts (physical address): Multi Display (P160), Radio Receiver (P190), CD changer (P360)

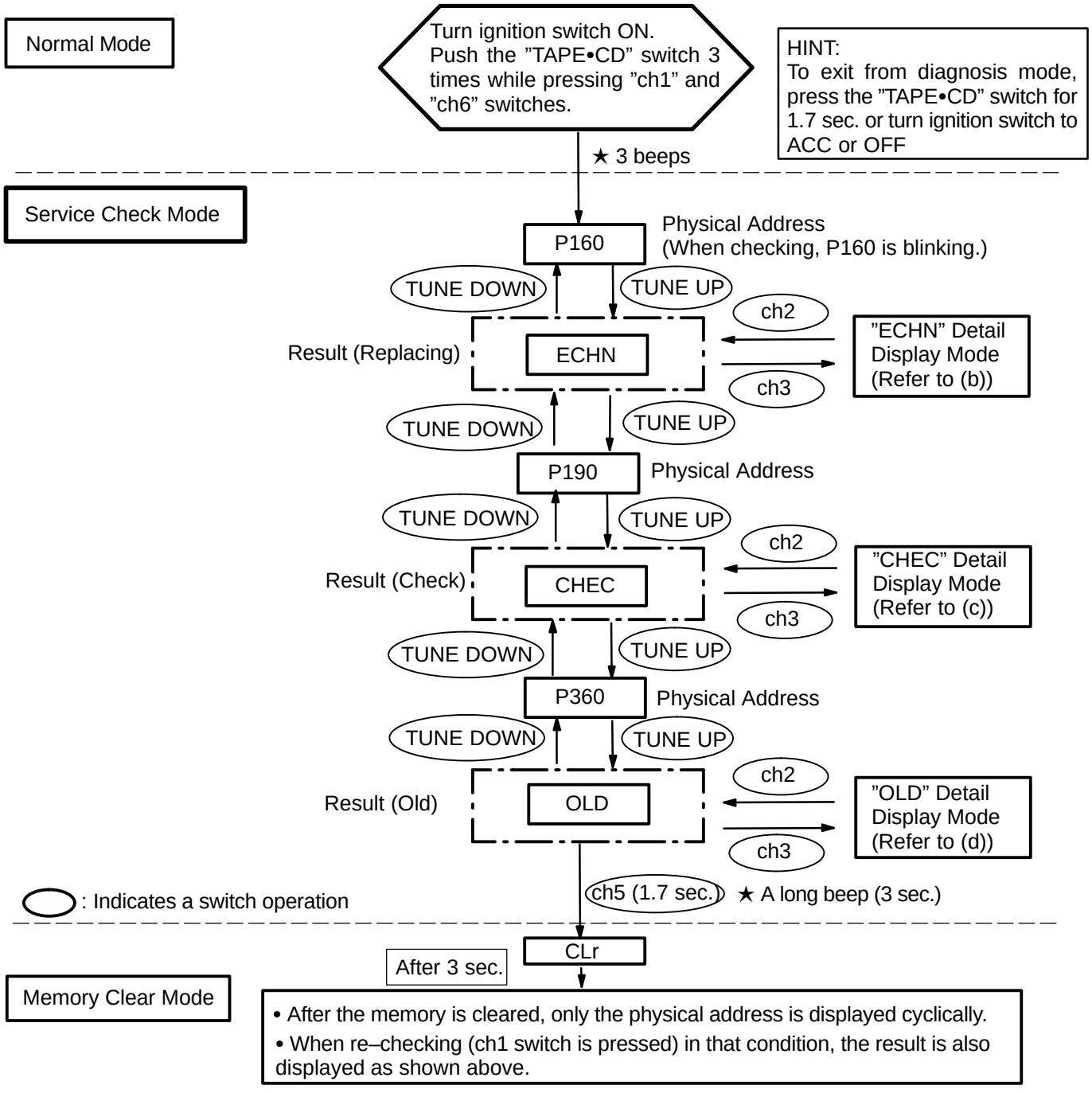

(d) ”ECHN” Detail Display Mode Screen

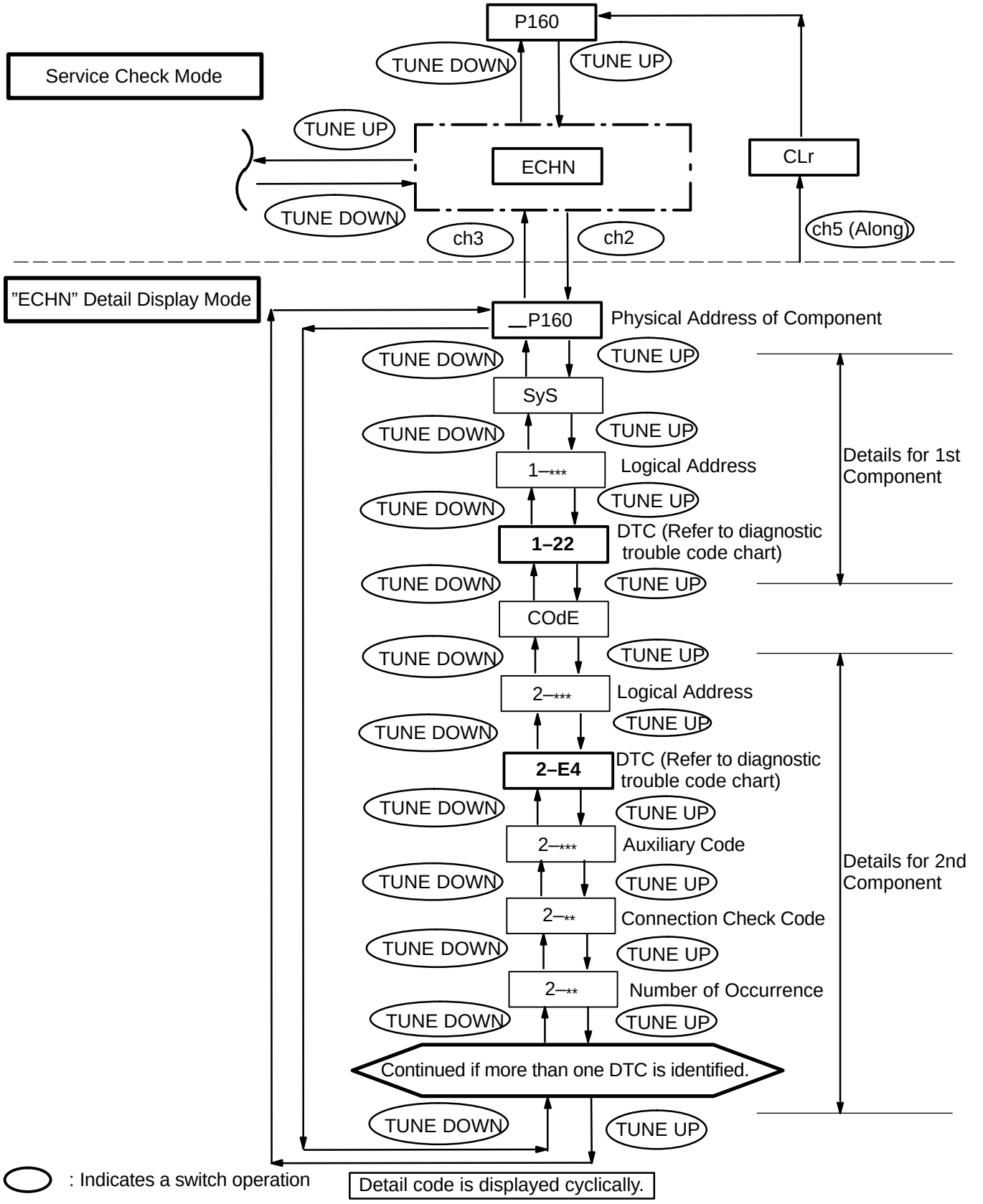

(e) ”CHEC” Detail Display Mode Screen

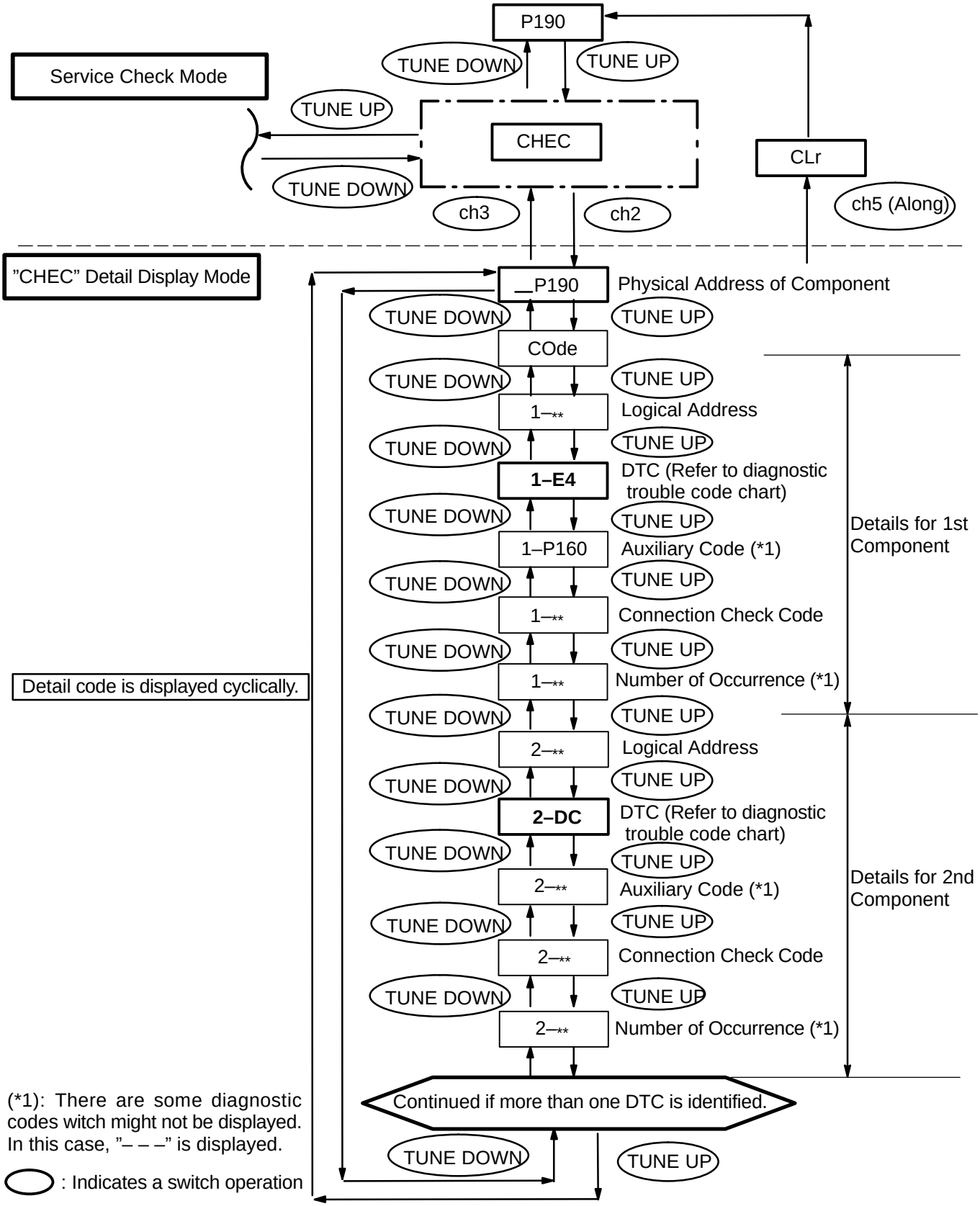

(f) ”OLD” Detail Display Mode Screen

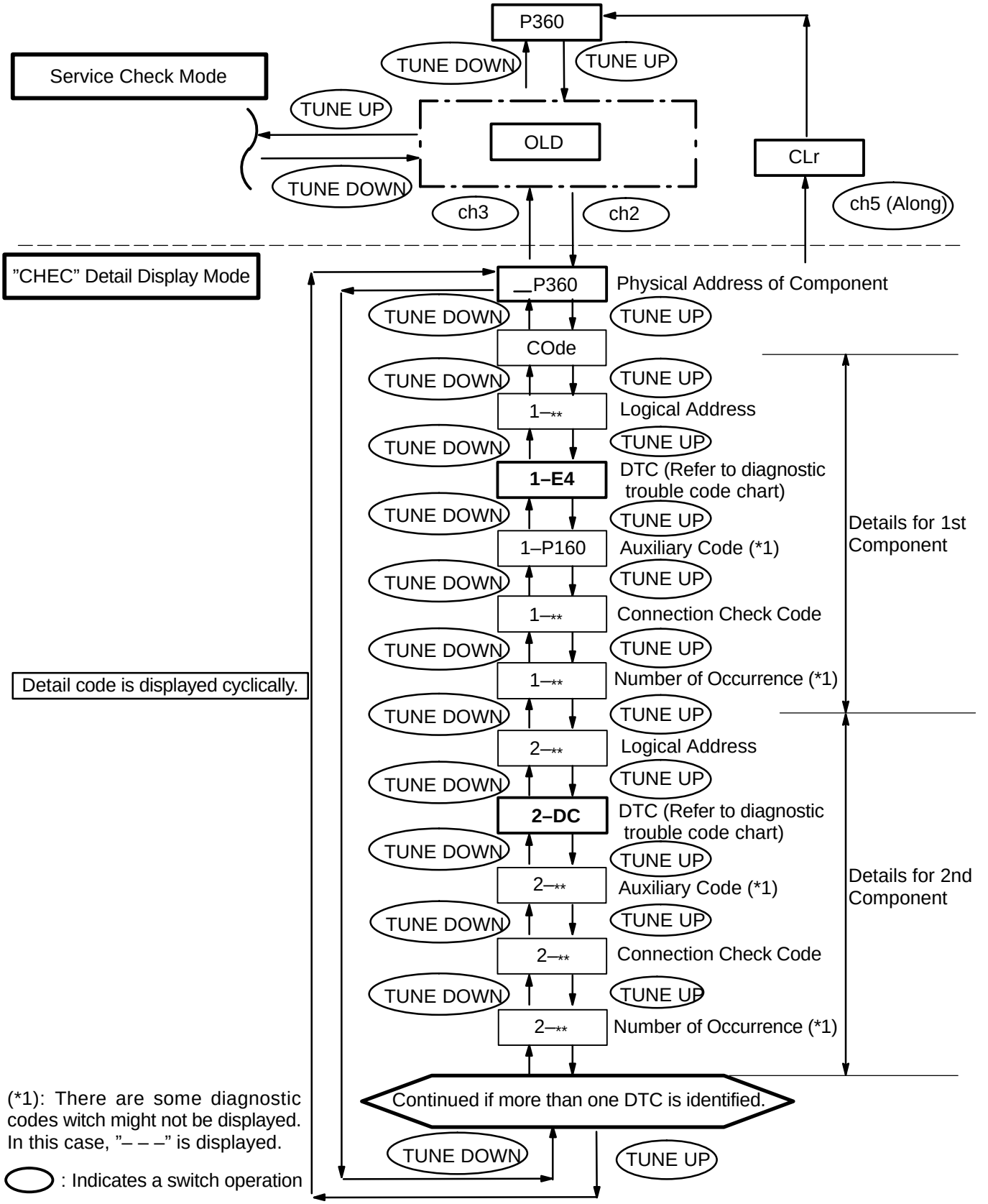

(g) Recheck

(1) Pressing the [ch1] key in Service Check Mode executes recheck.

(2) To display the recheck process, follow the sequence indicated Display Screen for Service Check.

2. DIAGNOSIS CODE LIST

Terms	Meaning
Physical address	Three–digit code (shown in hexadecimal) which is given to each component comprising the AVC–LAN. Corresponding to the function, individual symbols are specified.
Logical address	Two–digit code (shown in hexadecimal) which is given to each function comprising the inner system of the AVC–LAN.

(a) Physical address: 190 Radio receiver assembly

HINT:

- *1: Even if no failure is detected, it may be stored depending on the battery condition or voltage for starting an engine.
- *2: It is stored when 180 sec. has passed after the power supply connector is pulled out after engine start.
- *3: It may be stored when the engine key is turned 1 min. again after engine start.
- *4: It may be stored when the engine key is turned again after engine start.
- *5: When 210 sec. has passed after pulling out the power supply connector of the master component with the ignition switch in ACC or ON, this code is stored.

(1) Logical address: 01 (Communication control)

DTC	Diagnosis item	Diagnosis content	Countermeasure and inspected parts
D6 *1	Absence of Master	Component in which this code is recorded has been disconnected from system with ignition in ACC or ON. Or, when this code was recorded, multi–display assembly was disconnected.	• Check harness for power supply system of multi–display. • Check harness for communication system of multi–display. • Check harness for power supply system of radio and player. • Check harness for communication system of radio and player.
D8 *2	No Response to Connection Check	Component shown by auxiliary code is or had been disconnected from system after engine is start. D9	• Check harness for power supply system of component shown by auxiliary code. • Check harness for communication system of component shown by auxiliary code.
D9 *1	Last Mode Error	Component operated (sounds and/or images were provided) before engine stop is or has been disconnected with ignition switch in ACC or ON.	• Check harness for power supply system of component shown by auxiliary code. • Check harness for communication system of component shown by auxiliary code.
DA	No Response to ON/OFF Instruction	No response is identified when changing mode (audio and visual mode change). Detected when sound and picture does not change by button operation.	• Check harness for power supply system of component shown by auxiliary code. • Check harness for communication system of component shown by auxiliary code. • If error occurs again, replace component shown by auxiliary code.
DB *1	Mode Status Error	Dual alarm is detected.	• Check harness for power supply of component shown by auxiliary code. • Check harness for communication system of component shown by auxiliary code.
DC *3	Transmission Error	Transmission to component shown by auxiliary code has been failed. (Detecting this DTC does not necessarily mean actual failure.)	If same auxiliary code is recorded in order component, check harness for power supply and communication system of all components shown by code.

DD *4	Master Reset (Momentary Interruption)	After engine is started, multi–display assembly was disconnected from system.	• Check harness for power supply system of multi–display. • Check harness for communication system of multi–display. • Check harness for power supply system of radio and player. • Check harness for communication system of radio and player. • If this error occurs frequently, replace multi–display assembly.
DE *4	Slave Reset (Momentary Interruption)	After engine is started, slave component was disconnected from system.	• Check harness for power supply of component shown by auxiliary code. • Check harness for communication system of component shown by auxiliary code.
DF *5	Master Error	Due to defective condition of component with a display, master function is switched to audio equipment. Error occurs in communication between sub–master (audio) and master component.	• Check harness for power supply of multi–display assembly. • Check harness for communication system of multi–display assembly. • Check harness for communication system between multi–display assembly and sub–master component.
E0 *1	Registration Completion Instruction Error	”Registration Completion Instruction” command from master cannot be received.	Since this DTC is provided for engineering purpose, it may be detected when no actual failure exists.
E1 *1	Audio processor ON error	While source equipment is operating, AMP output is stopped.	• Check harness for power supply of multi–display assembly. • Check harness for communication system of multi–display assembly.
E2	ON/OFF Instruction Parameter Error	Error occurs in ON/OFF controlling command from multi–display assembly.	Replace multi–display assembly.
E3 *1	Registration Request Transmission	Registration Request command is output from slave component. Receiving Connection Check Instruction, Registration Request command is output from sub–master component.	Since this DTC is provided for engineering purpose, it may be detected when no actual failure exists.
E4 *1	Multiple Frame Abort	Multiple frame transmission is aborted.	Since this DTC is provided for engineering purpose, it may be detected when no actual failure exists.

(2) Logical address: 61 (Cassette switch)

DTC	Diagnosis item	Diagnosis content	Countermeasure and inspected parts
40	Mechanical of Media Error	Malfunction due to mechanical failure is identified. Or cassette tape is cut or entangled.	• Inspect cassette tape. • Replace radio and player.

(3) Logical address: 62 (CD player)

DTC	Diagnosis item	Diagnosis content	Countermeasure and inspected parts
42	No Disc Readout	Disc cannot be read	Inspect CD.
44	CD Error	Error is detected in CD player.	Replace radio receiver assembly.
51	Eject Error	CD cannot be ejected.	Replace radio receiver assembly.
46	Scratched/Reversed Disc	Scratches or dirt is found on CD surface or CD is set upside down.	Inspect CD.

(b) Physical address: 440 Stereo component amplifier

HINT:

- *1: Even if no failure is detected, it may be stored depending on the battery condition or voltage for starting an engine.
- *2: It may be stored when the engine key is turned 1 min. again after engine start.
- *3: It may be stored when the engine key is turned again after engine start.
- *4: When 210 sec. has passed after pulling out the power supply connector of the master component with the ignition switch in ACC or ON, this code is stored.
  Logical address: 01 (Communication control)

DTC	Diagnosis item	Diagnosis content	Countermeasure and inspected parts
D6 *1	Absence of Master	Component in which this code is recorded has been disconnected from system with ignition in ACC or ON. Or, when this code was recorded, multi–display assembly was disconnected.	• Check harness for power supply of radio and player. • Check harness for communication system of radio and player. • Check harness for power supply of stereo component amplifier. • Check harness for communication system of stereo component amplifier.
D7	Communication Check Error	Component in which this code is recorded is or was disconnected from system after engine start. Or, when recording this code, multi–display assembly was disconnected.	• Check harness for power supply of radio and player. • Check harness for communication system of radio and player. • Check harness for power supply of stereo component amplifier. • Check harness for communication system of stereo component amplifier.
DC *2	Transmission Error	Transmission to component shown by auxiliary code has been failed. (Detecting this DTC does not necessarily mean actual failure.)	If same auxiliary code is recorded in order component, check harness for power supply and communication system of all components shown by code.
DD *3	Master Reset (Momentary Interruption)	After engine is started, multi–display assembly was disconnected from system.	• Check harness for power supply of radio and player. • Check harness for communication system of radio and player. • Check harness for power supply of stereo component amplifier. • Check harness for communication system of stereo component amplifier. • If this error occurs frequently, replace multi–display assembly.
DF *4	Master Error	Due to defective condition of component with a display, master function is switched to audio equipment. Error occurs in communication between sub–master (audio) and master component.	• Check harness for power supply of multi–display assembly. • Check harness for communication system of multi–display assembly. • Check harness for communication system between multi–display assembly and sub–master component.
E0 *1	Registration Completion Instruction Error	”Registration Completion Instruction” command from master cannot be received.	Since this DTC is provided for engineering purpose, it may be detected when no actual failure exists.
E1 *1	Audio processor ON error	While source equipment is operating, AMP output is stopped.	• Check harness for power supply of multi–display assembly. • Check harness for communication system of multi–display assembly.

E2	ON/OFF Instruction Parameter Error	Error occurs in ON/OFF controlling command from multi–display assembly.	Replace multi–display assembly.
E3 *1	Registration Request Transmission	• Registration Request command is output from slave component. • Registration Connection Check Instruction, Registration Request command is output from sub–master component.	Since this DTC is provided for engineering purpose, it may be detected when no actual failure exists.

3. PROBLEM SYMPTOMS TABLE

NOTICE:

When replacing the internal mechanism (computer part) of the audio system, be careful that no part of your body or clothing comes in contact with the terminals of the leads from the IC, etc. of the replacement part (spare part).

HINT:

This inspection procedure is a simple troubleshooting which should be carried out on the vehicle during system operation and was prepared on the assumption of system component troubles (except for the wires and connectors, etc.).

Always inspect the trouble taking the following items into consideration.

- Open or short circuit of the wire harness
- Connector or terminal connection fault

	Problem	No.
Radio	Radio not operating when power switch turned to 'ON'.	1
	Display indicates when power switch turned to 'ON', but no sound (including 'noise') is produced.	2
	Noise present, but AM – FM not operating.	3
	Any speaker does not work.	4
	Any AM or FM does not work.	5
	Few preset turning bands.	5
	Reception poor.	6
	Sound quality poor.	7
	Preset memory disappears.	8
Tape Player	Cassette tape cannot be inserted.	9
	Cassette tape inserted, but no power.	10
	Power coming in, but tape player not operating.	11
	Any speaker does not work.	12
	Sound quality poor.	13
	Tape jammed, malfunction with tape speed or auto–reverse.	14
	Cassette tape will not be ejected.	15
CD Player	CD cannot be inserted.	16
	CD inserted, but no power.	17
	Power coming in, but CD player not operating.	18
	Sound jumps.	19
	Sound quality poor (Volume faint).	20
	Any speaker does not work.	21
	CD will not be ejected.	22
Power Amplifier	No power coming in.	23
	Power coming in, but power amplifier not operating.	24
	Any speaker does not work.	25
Noise	Noise occurs	26
	Noise produced by vibration or shock while driving.	27
	Noise produced when engine starts.	28

The term "AM" includes LW, MW and SW, and the term "FW" includes UKW.

1	Radio	RADIO NOT OPERATING WHEN POWER SWITCH TURNED TO ”ON”

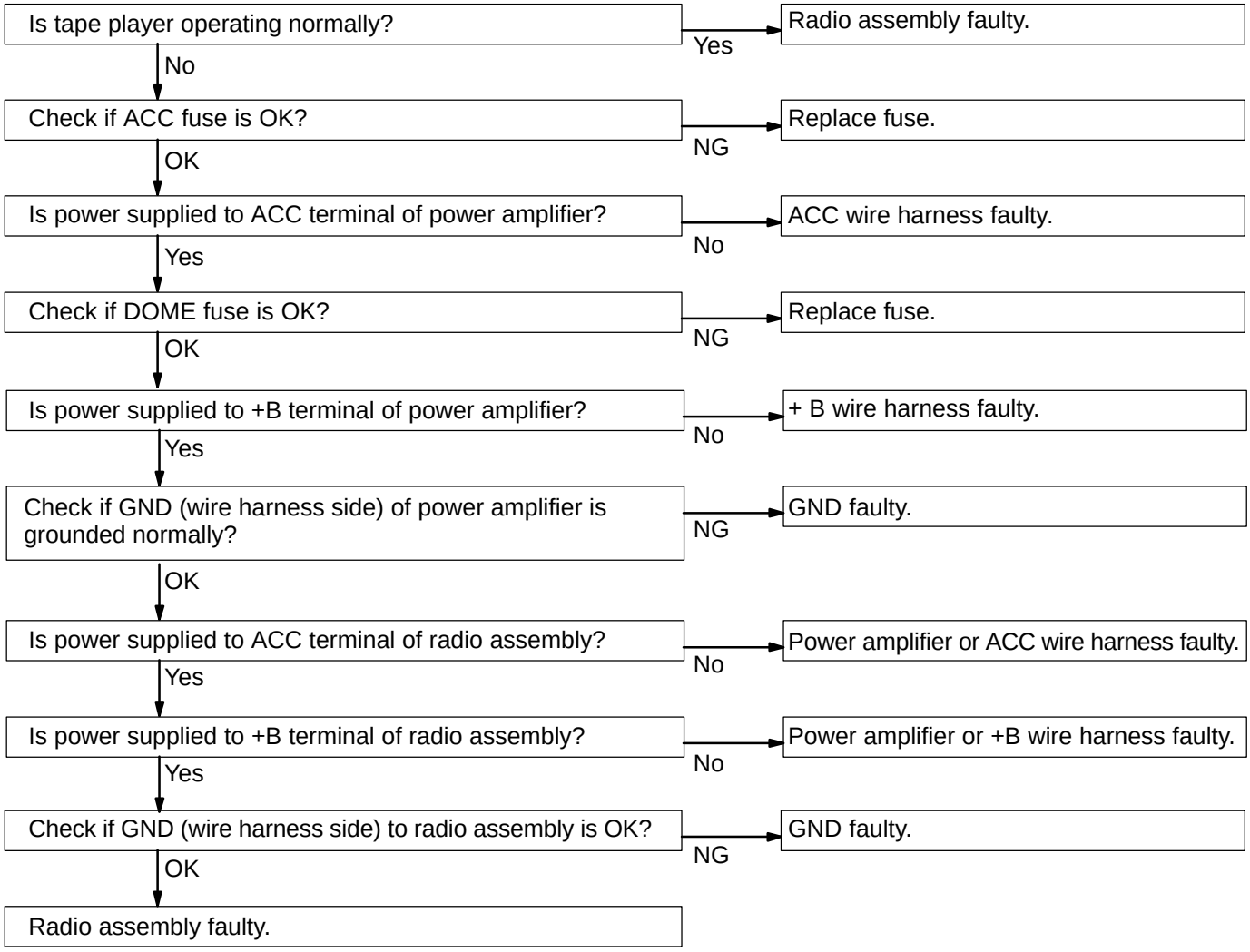

2	Radio	DISPLAY INDICATES WHEN POWER SWITCH TURNED TO ”ON”, BUT NO SOUND (INCLUDING ”NOISE”) IS PRODUCED

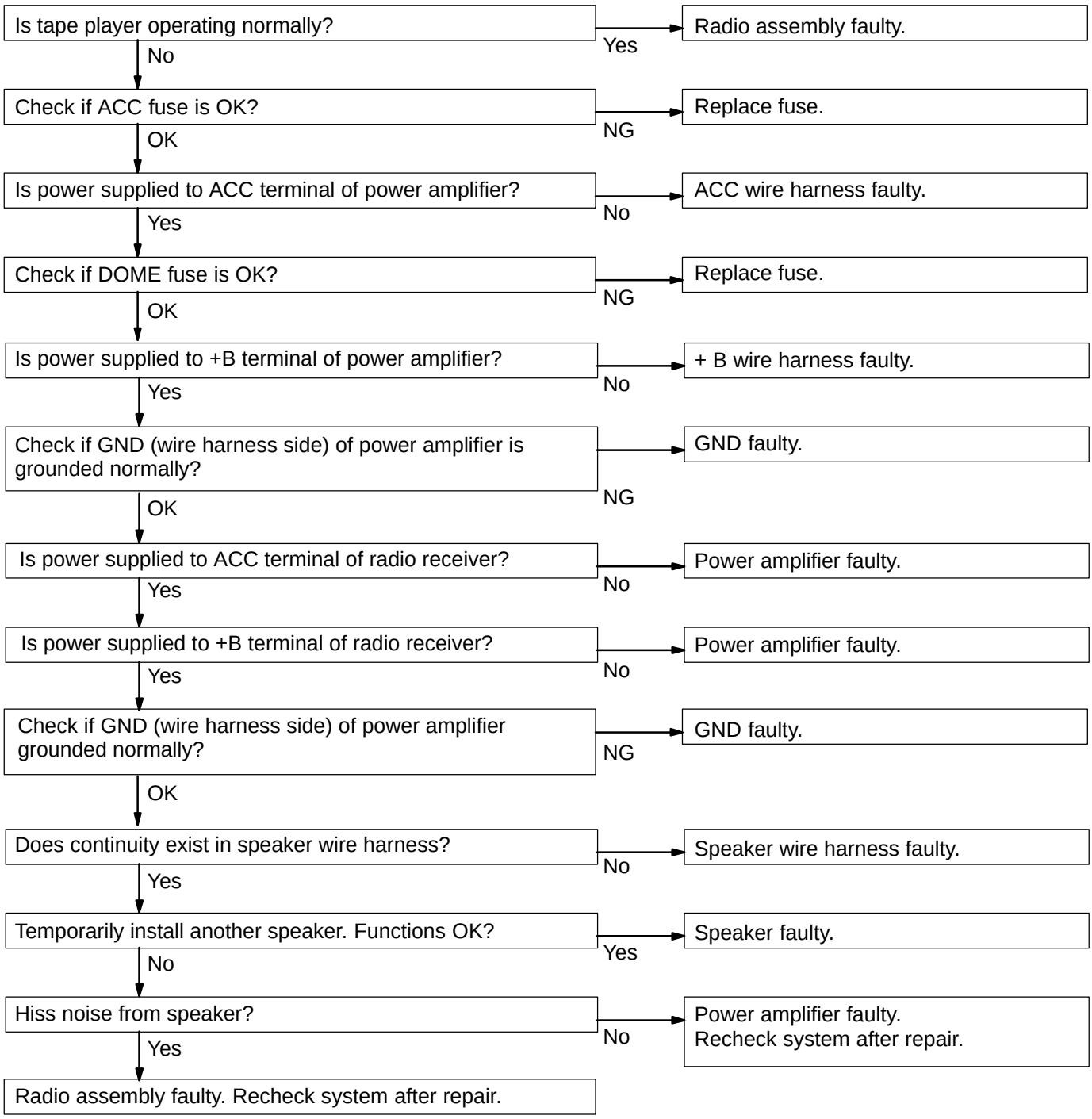

3	Radio	NOISE PRESENT, BUT AM–FM NOT OPERATING

Go to No.25

If radio side faulty. → Radio faulty.

4	Radio	ANY SPEAKER DOSE NOT WORK

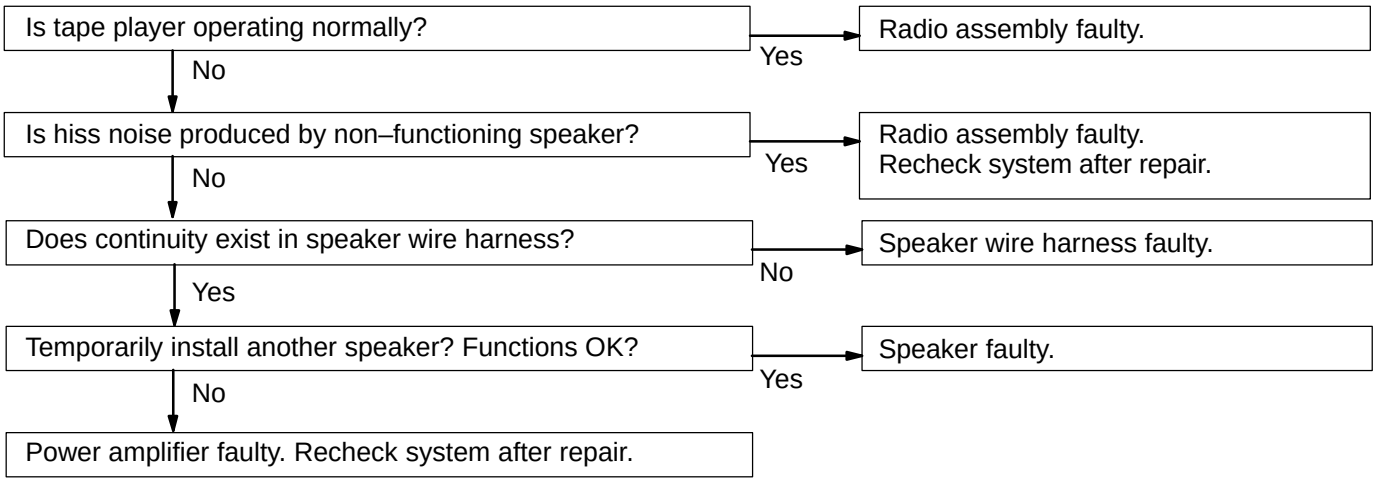

5	Radio	ANY AM OR FM DOES NOR WORK FEW PRESET TUNING BANDS

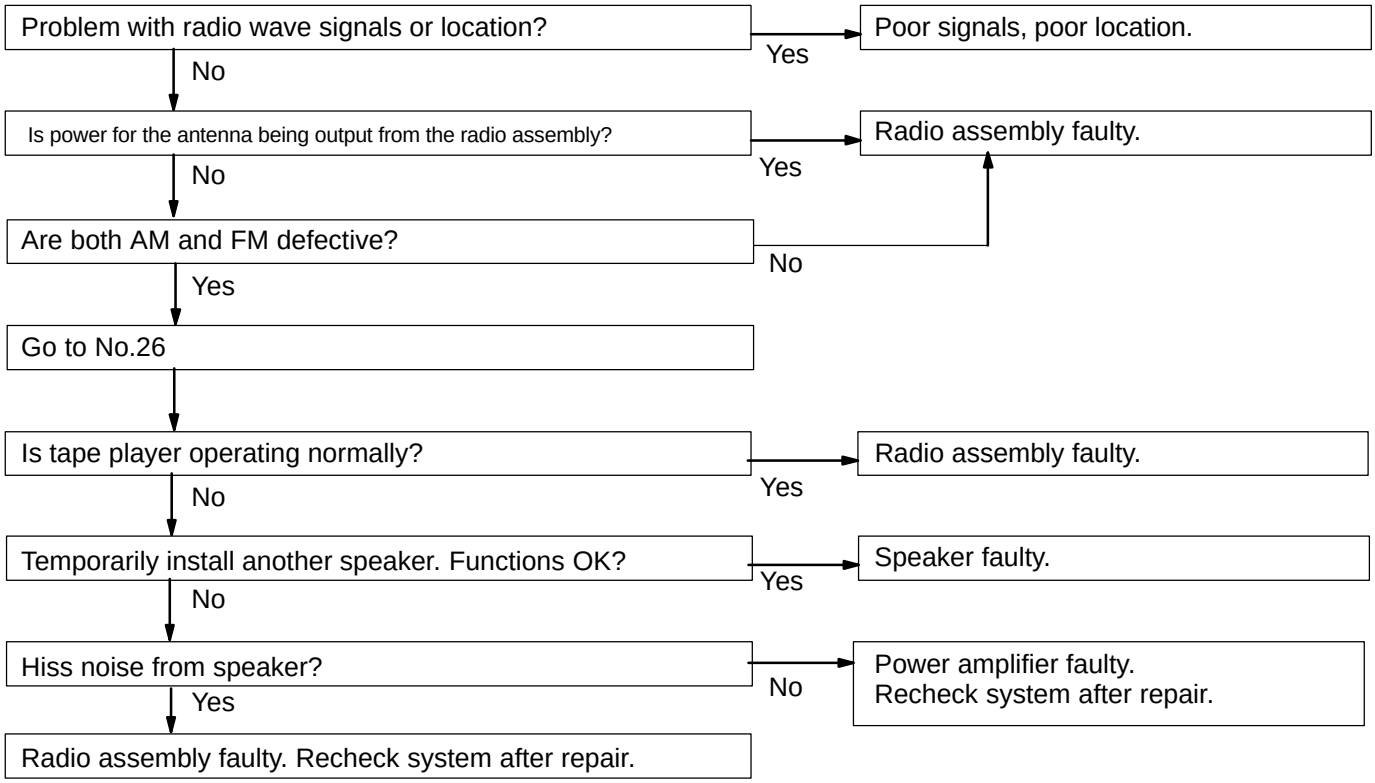

6	Radio	POOR RECEPTION

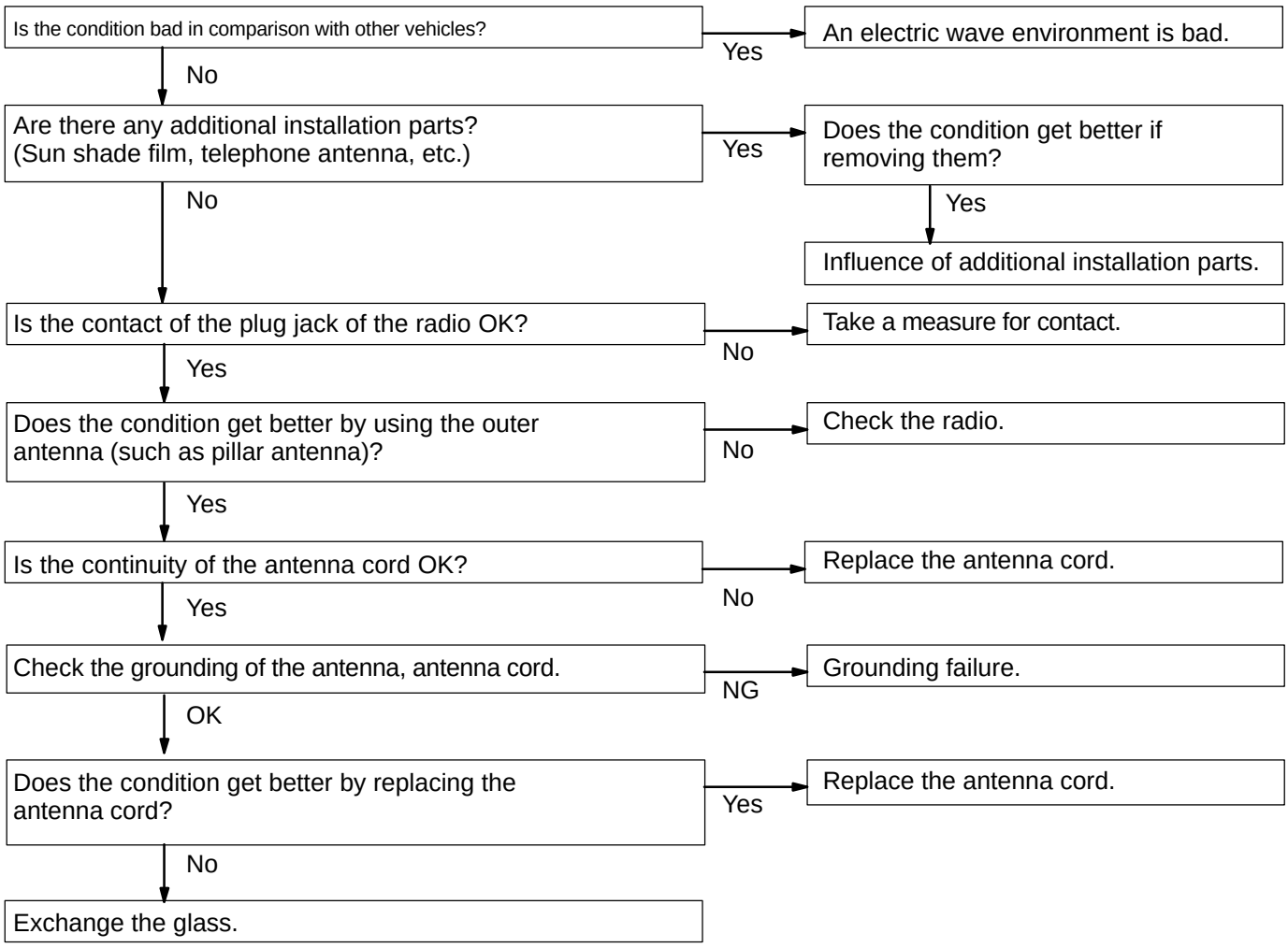

7	Radio	SOUND QUALITY POOR

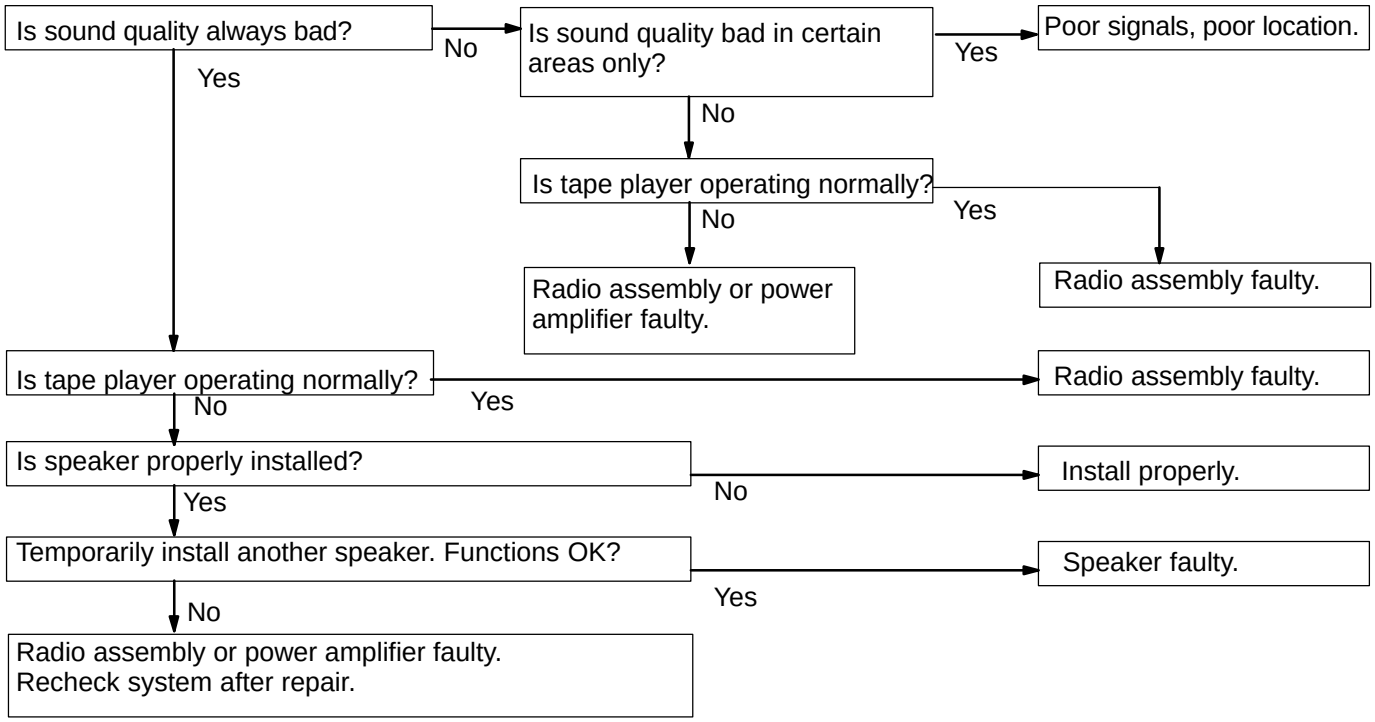

8	Radio	PRESET MEMORY DISAPPEARS

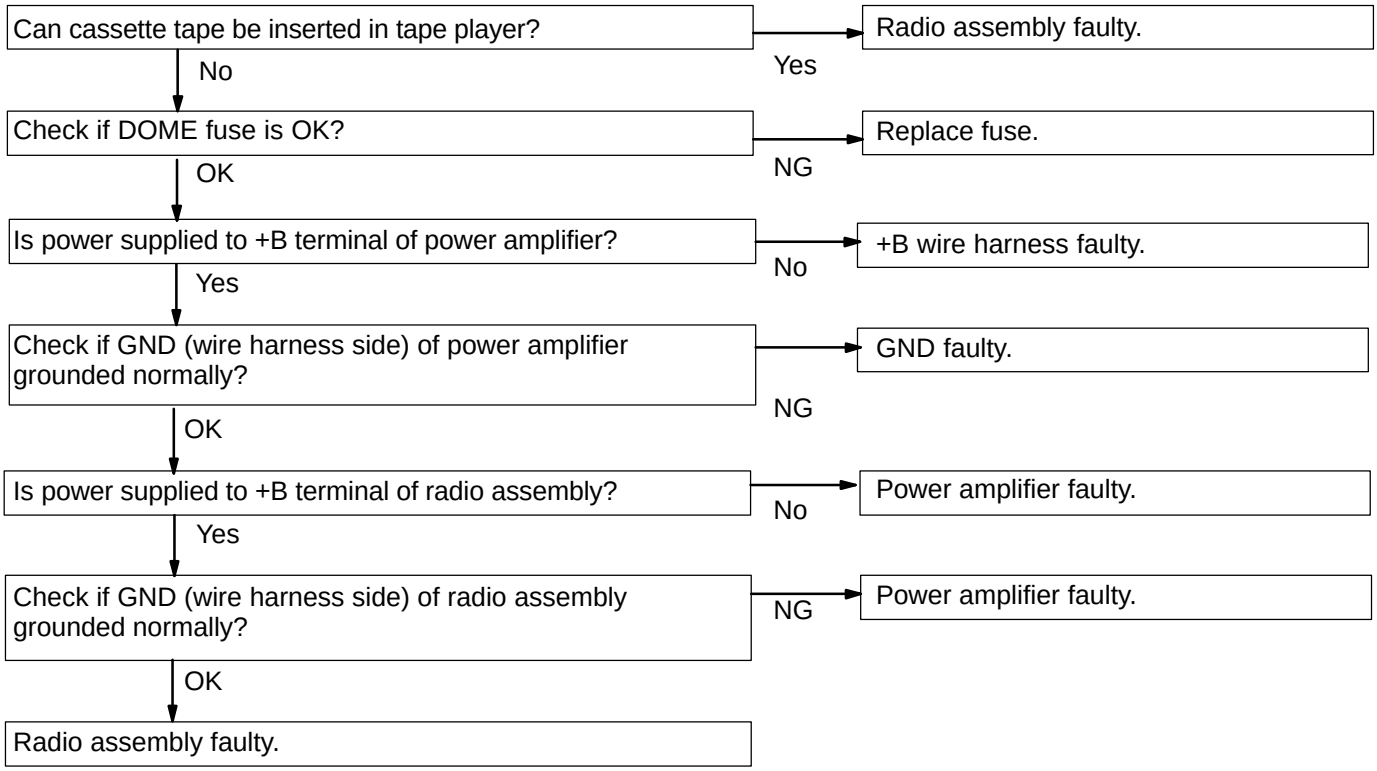

9	Tape Player	CASSETTE TAPE CANNOT BE INSERTED

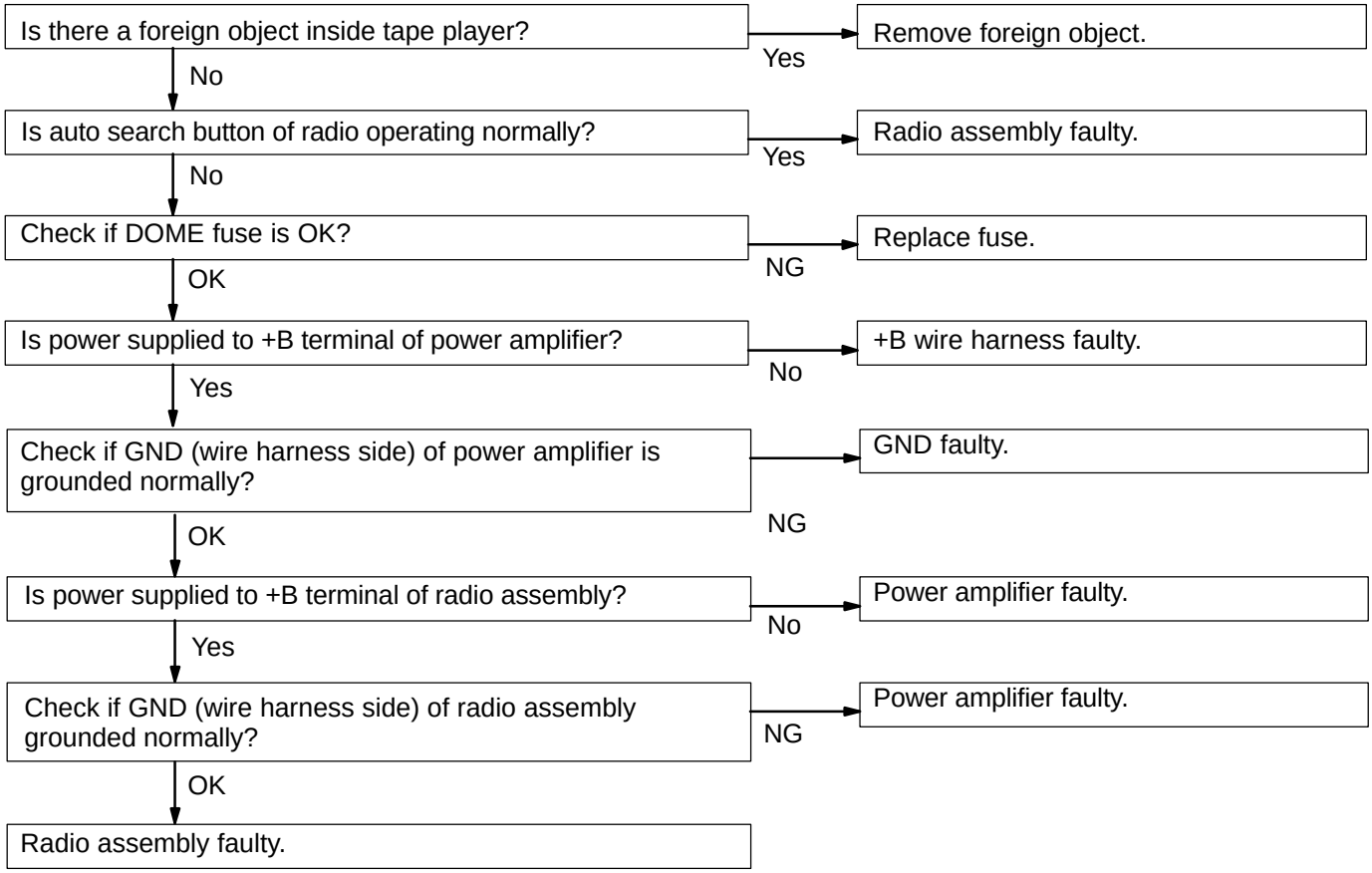

10	Tape Player	CASSETTE TAPE INSERTED, BUT NO POWER

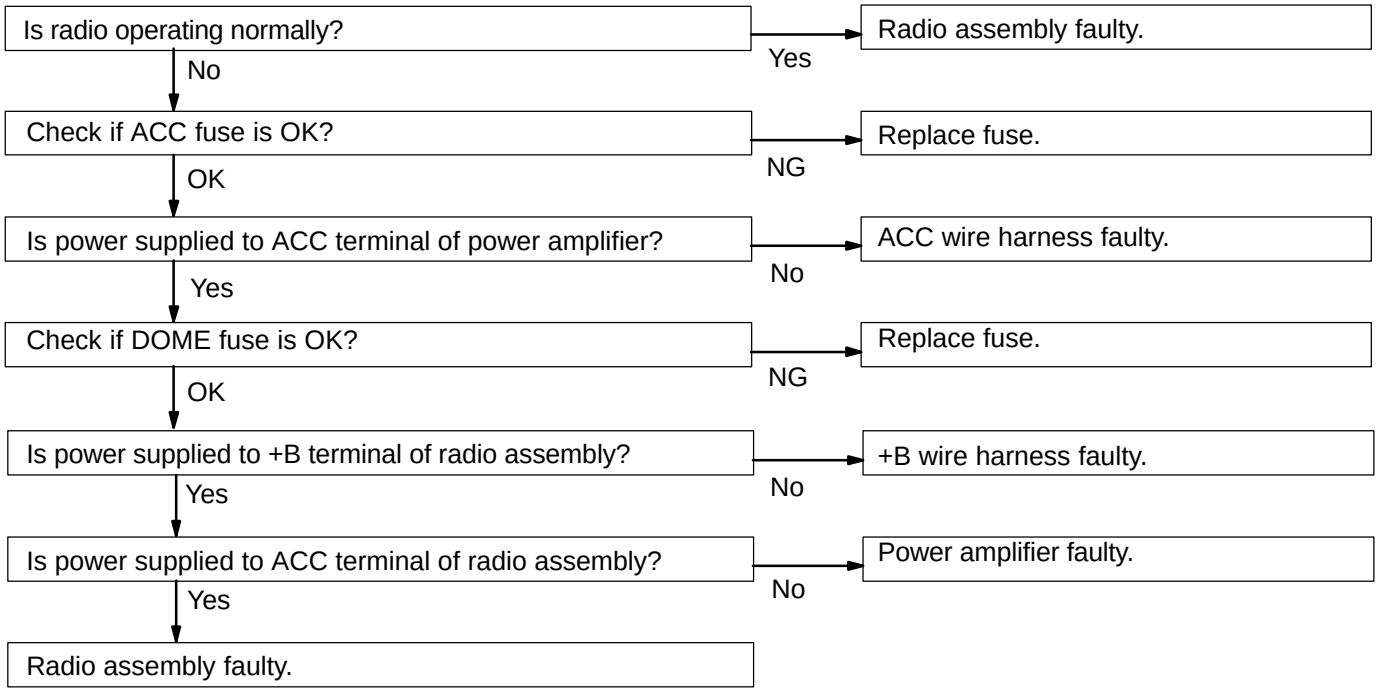

11	Tape Player	POWER COMING IN, BUT TAPE PLAYER NOT OPERATING

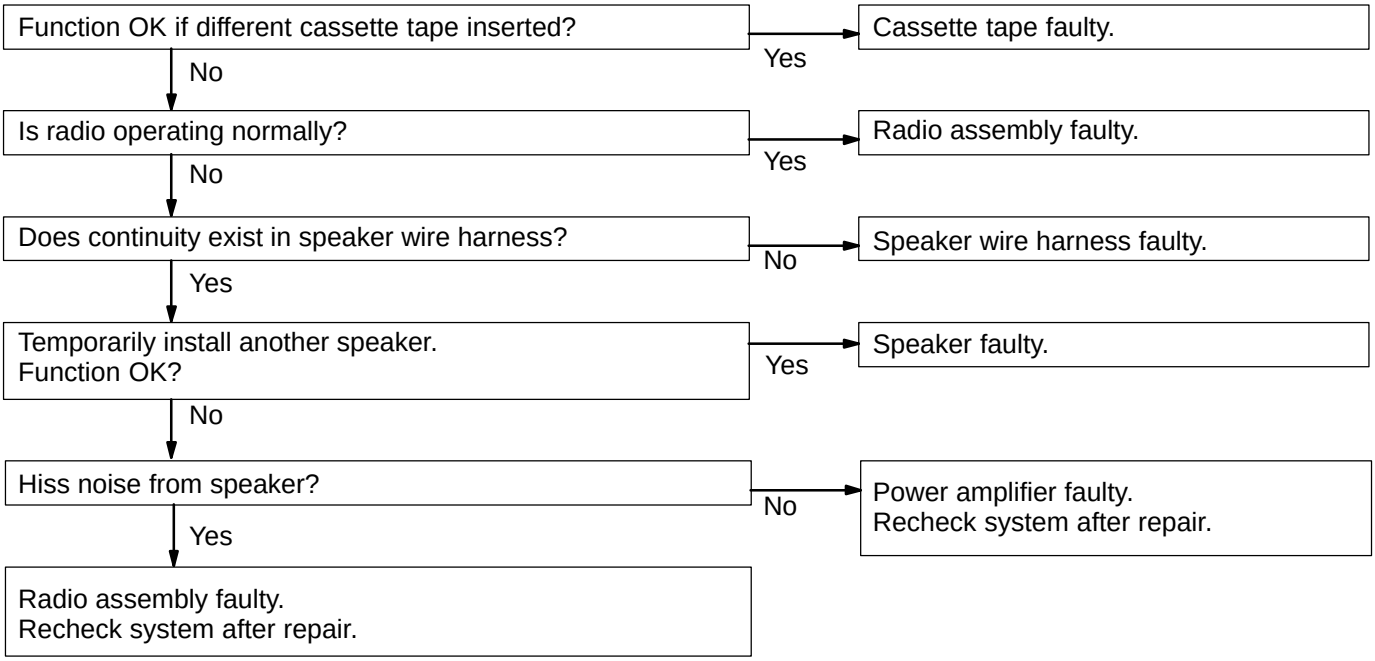

12	Tape Player	ANY SPEAKER DOES NOT WORK

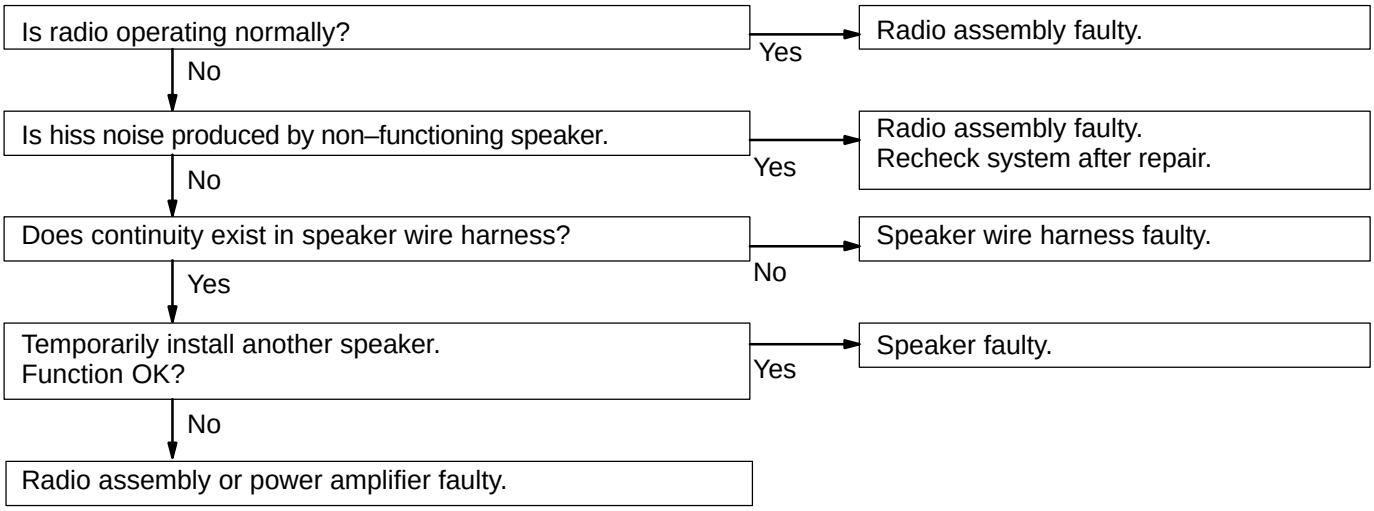

13	Tape Player	SOUND QUALITY POOR (VOLUME FAINT)

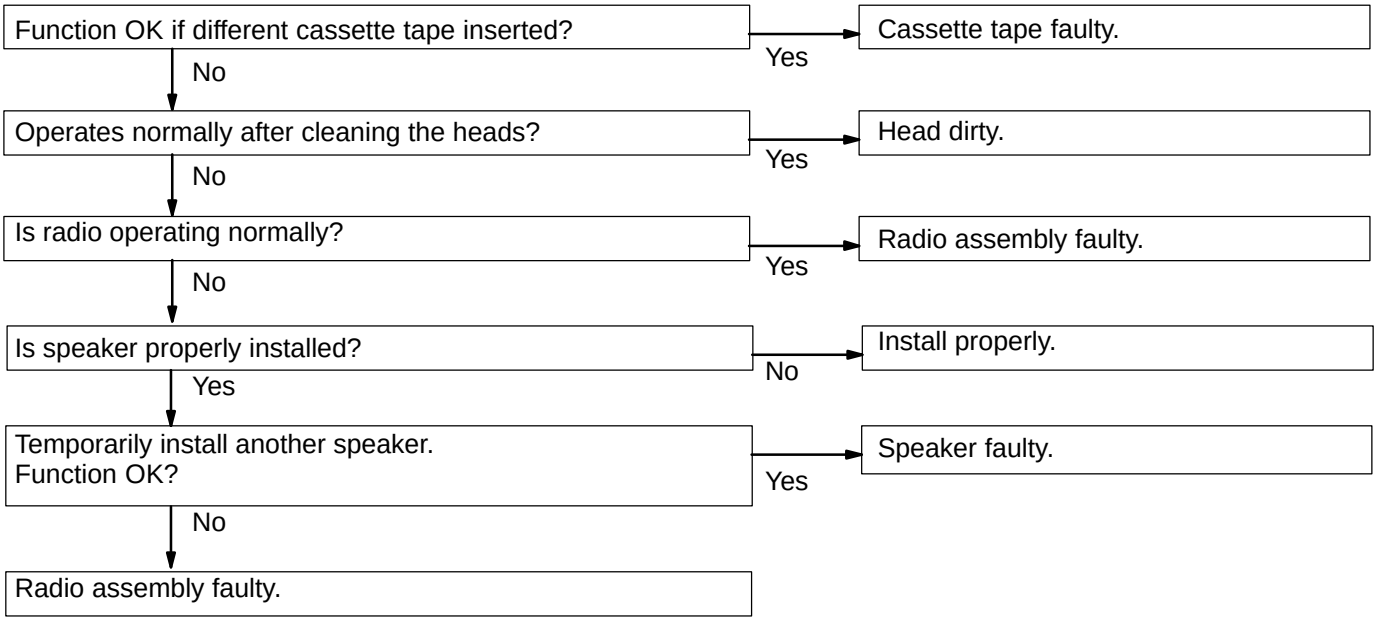

14	Tape Player	TAPE JAMMED,MALFUNCTION WITH TAPE SPEED OR AUTO–REVERSE

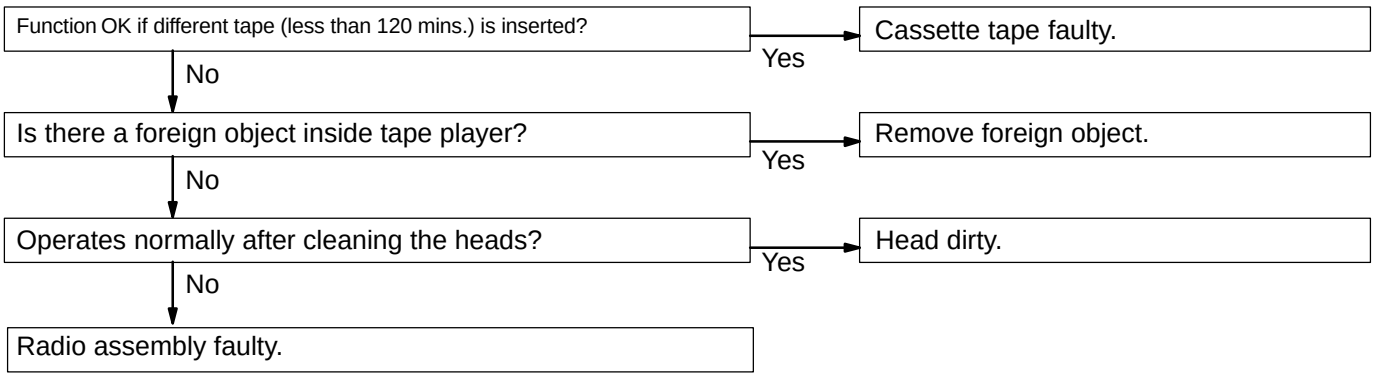

15	Tape Player	CASSETTE TAPE WILL NOT BE EJECTED

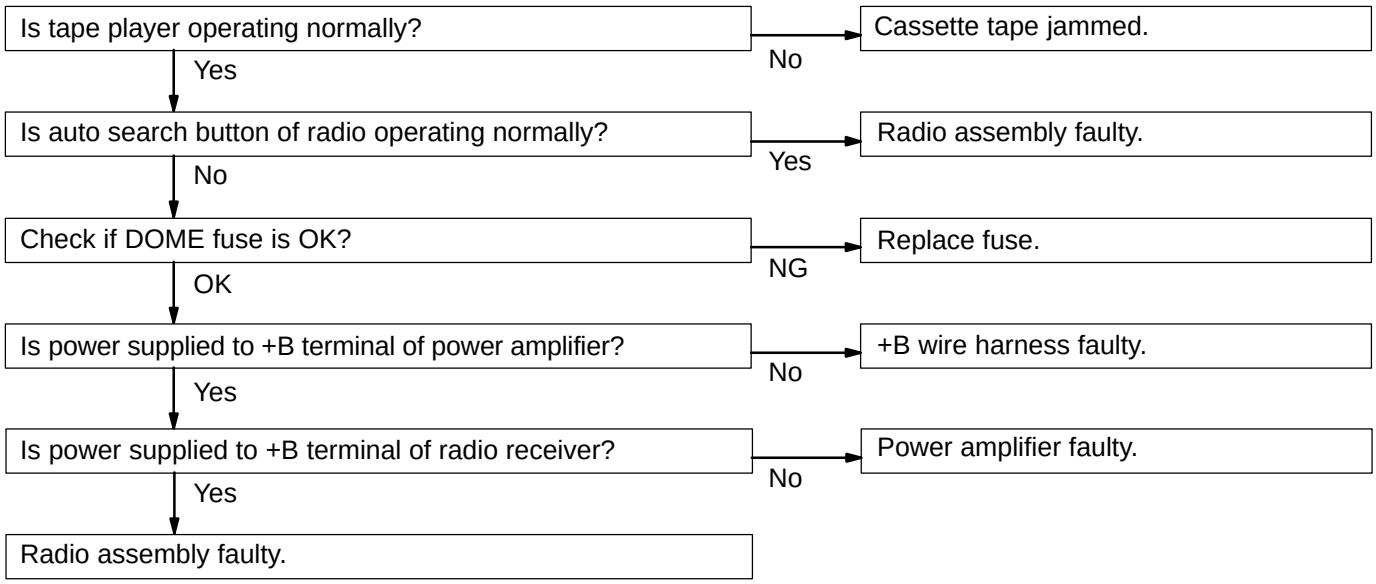

16	CD Player	CD CANNOT BE INSERTED

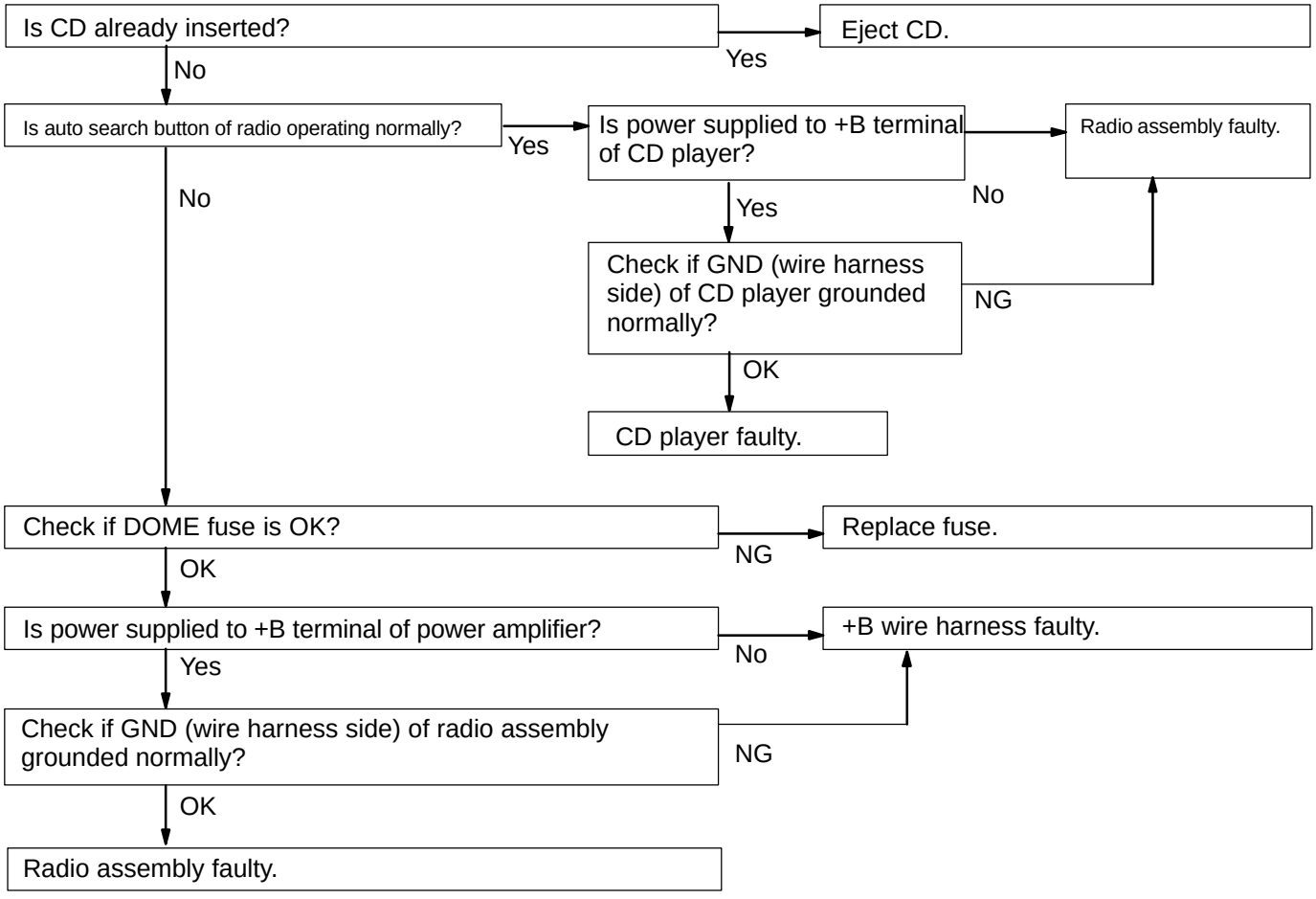

17	CD Player	CD INSERTED, BUT NO POWER

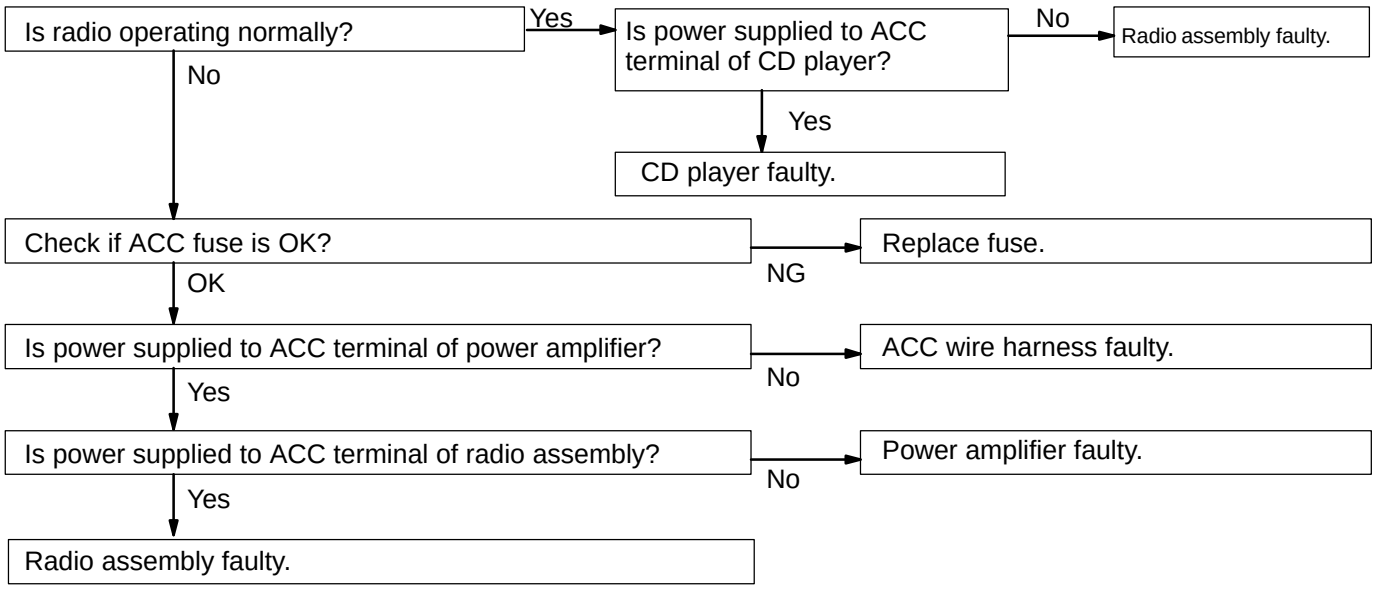

18	CD Player	POWER COMING IN, BUT CD PLAYER NOT OPERATING

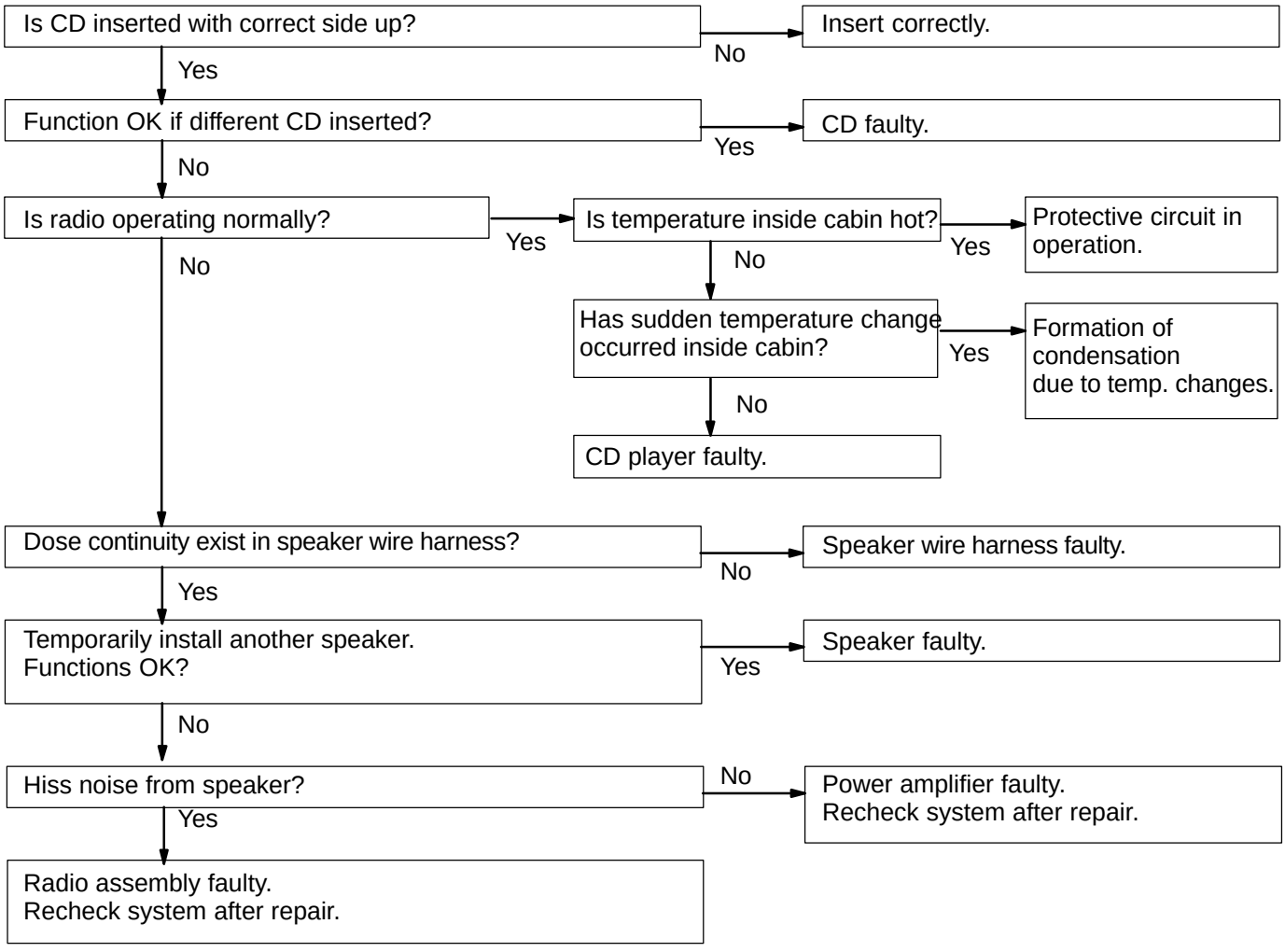

19	CD Player	SOUND JUMPS

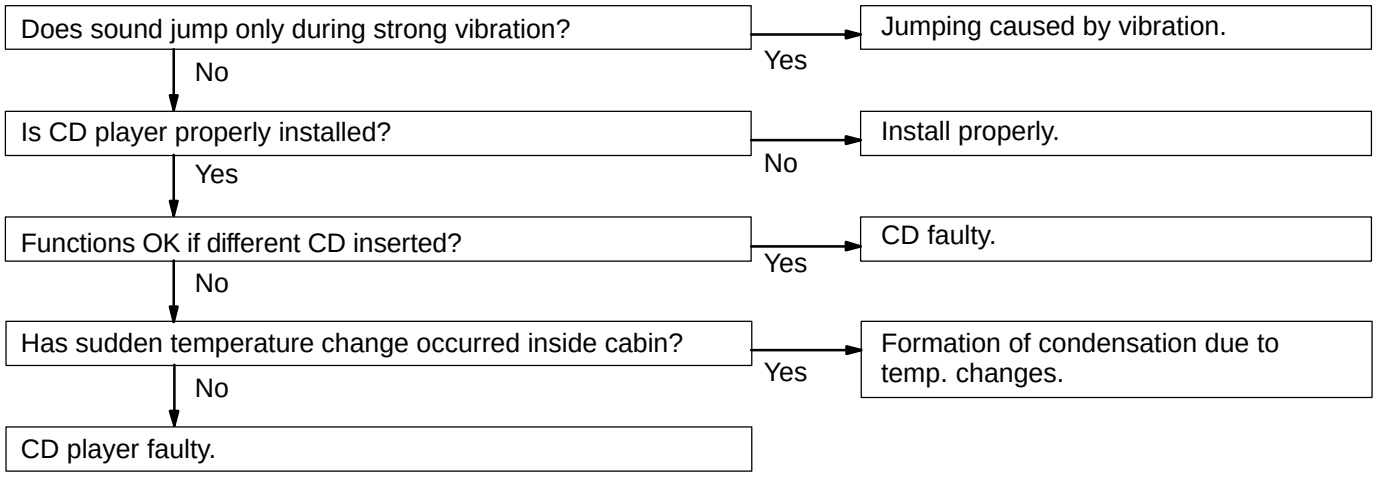

20	CD Player	SOUND QUALITY POOR (VOLUME FAINT)

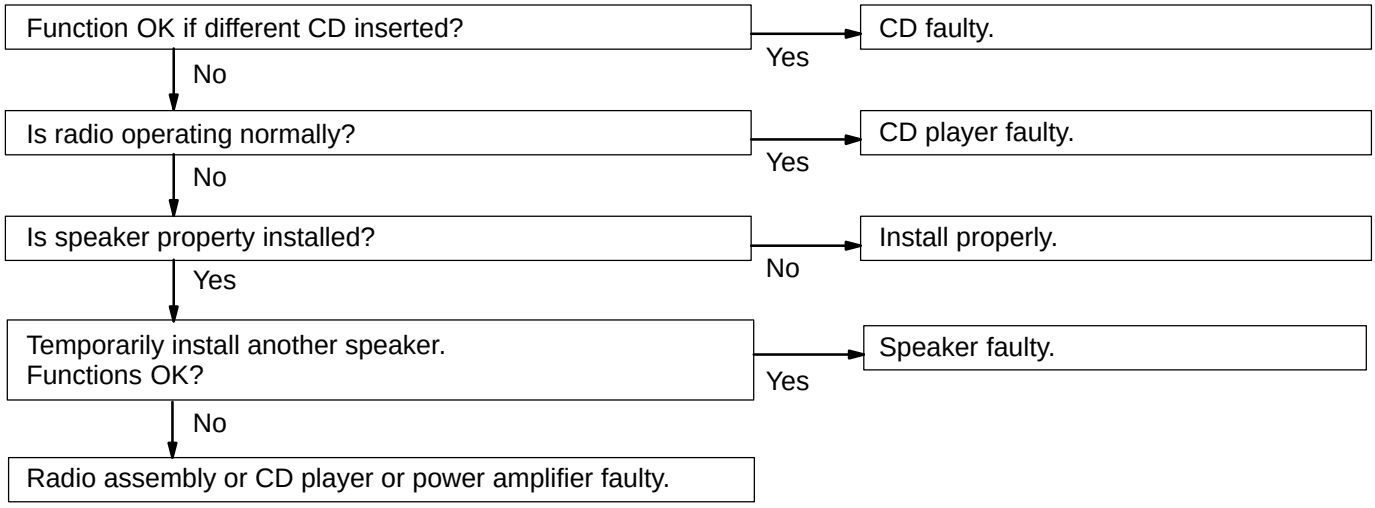

21	CD Player	ANY SPEAKER DOES NOT WORK

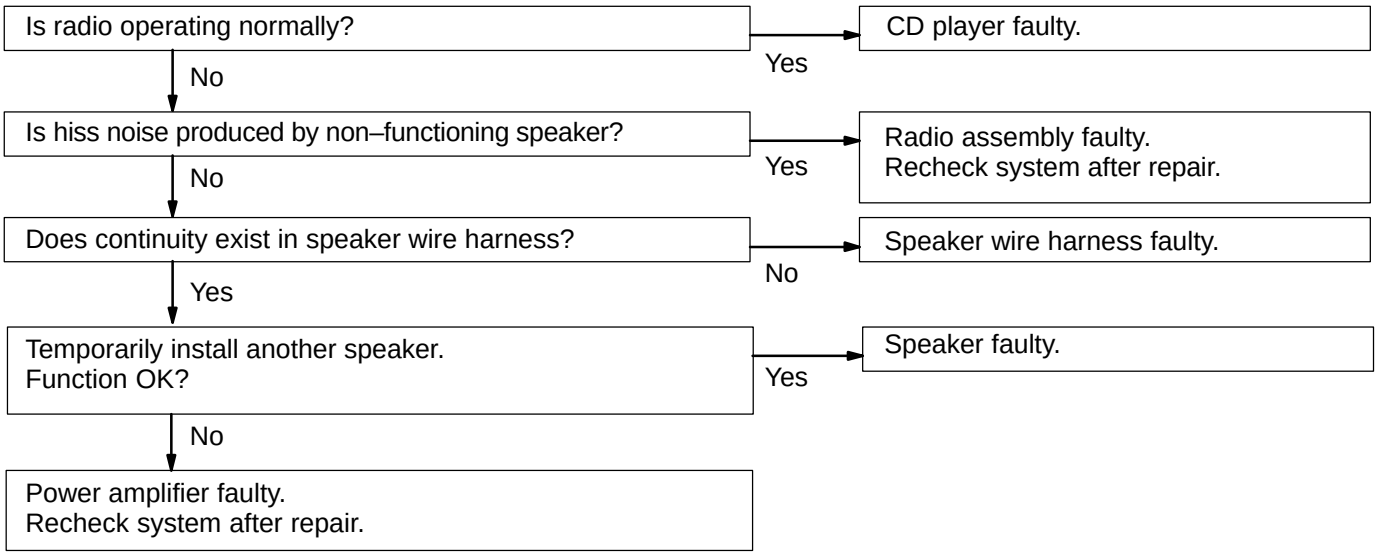

22	CD Player	CD WILL NOT BE EJECTED

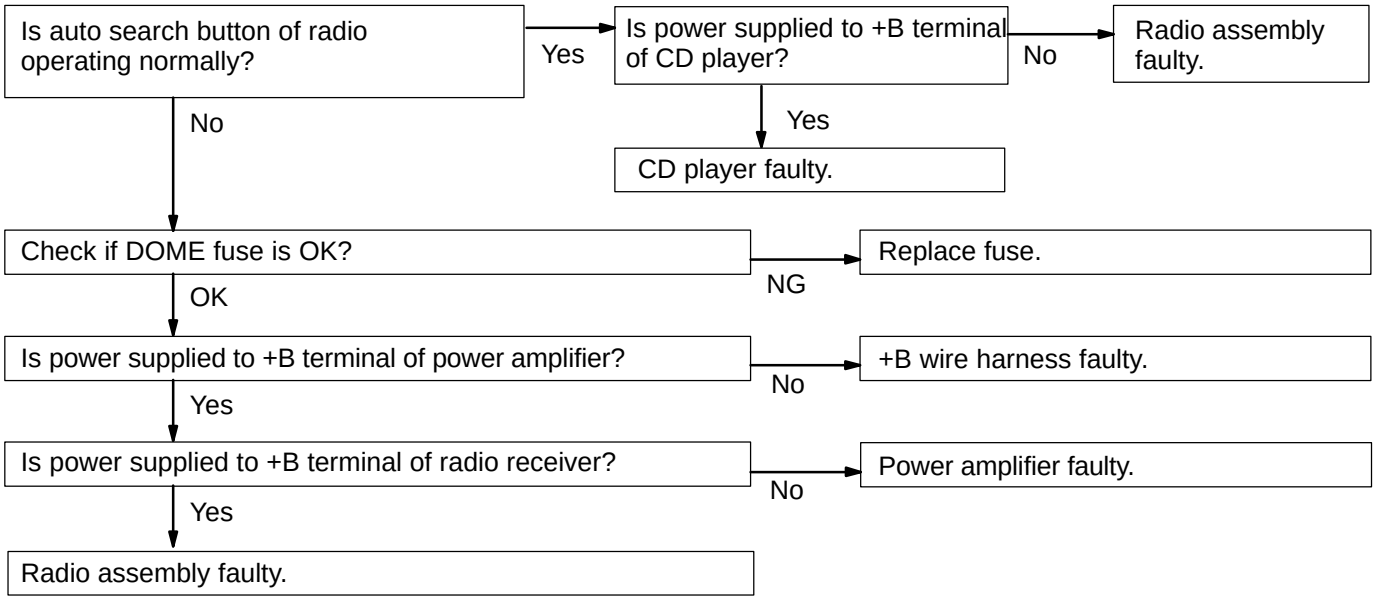

23	Power Amplifier	NO POWER COMING IN

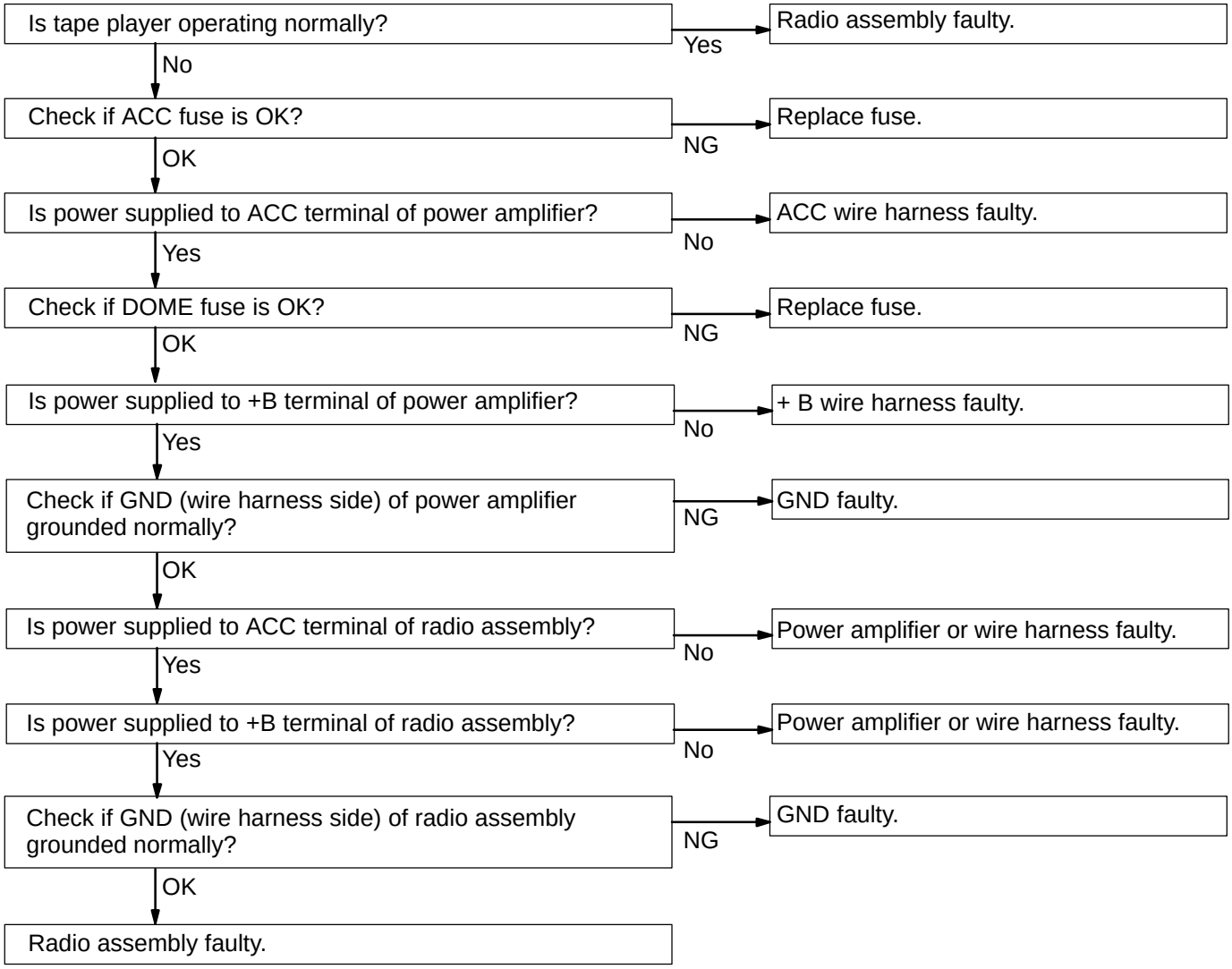

24	Power Amplifier	POWER COMING IN, BUT WOOFER (POWER) AMPLIFIER NOT OPERATING

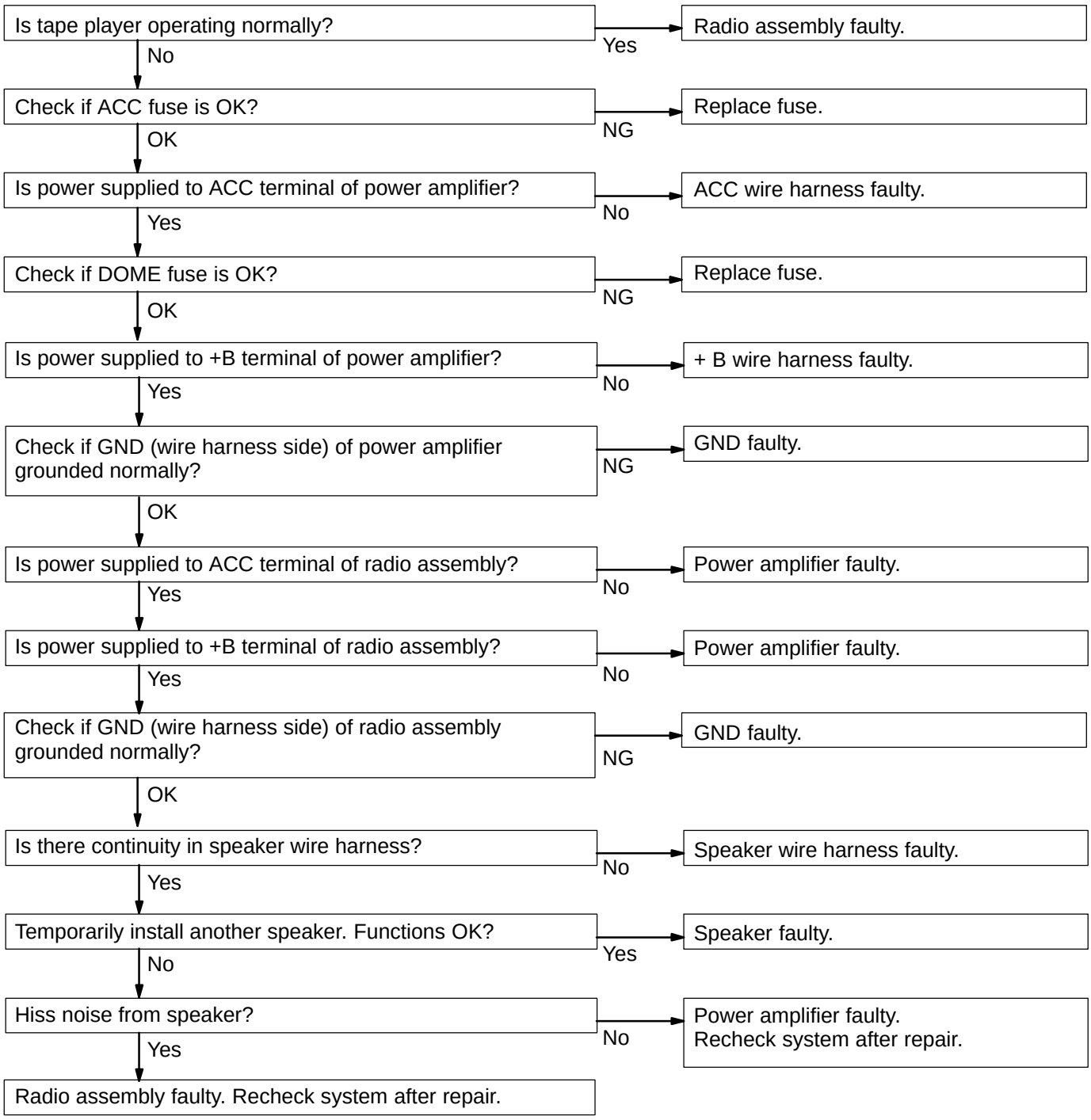

25	Power Amplifier	ANY SPEAKER DOES NOT WORK

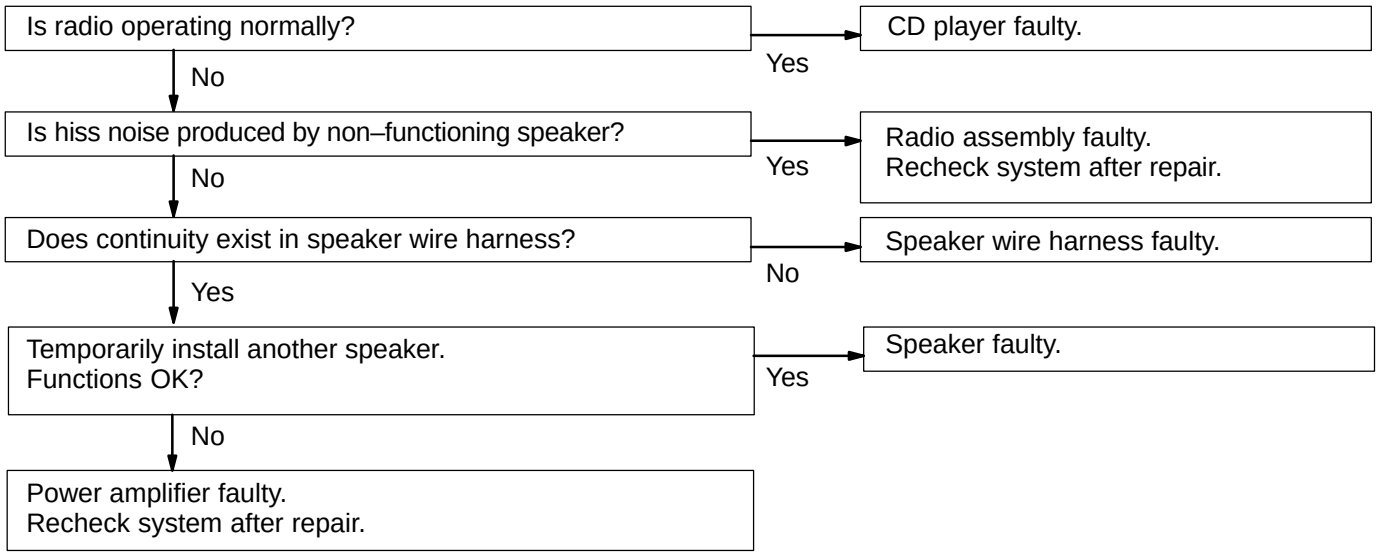

26	Noise	NOISE OCCURS

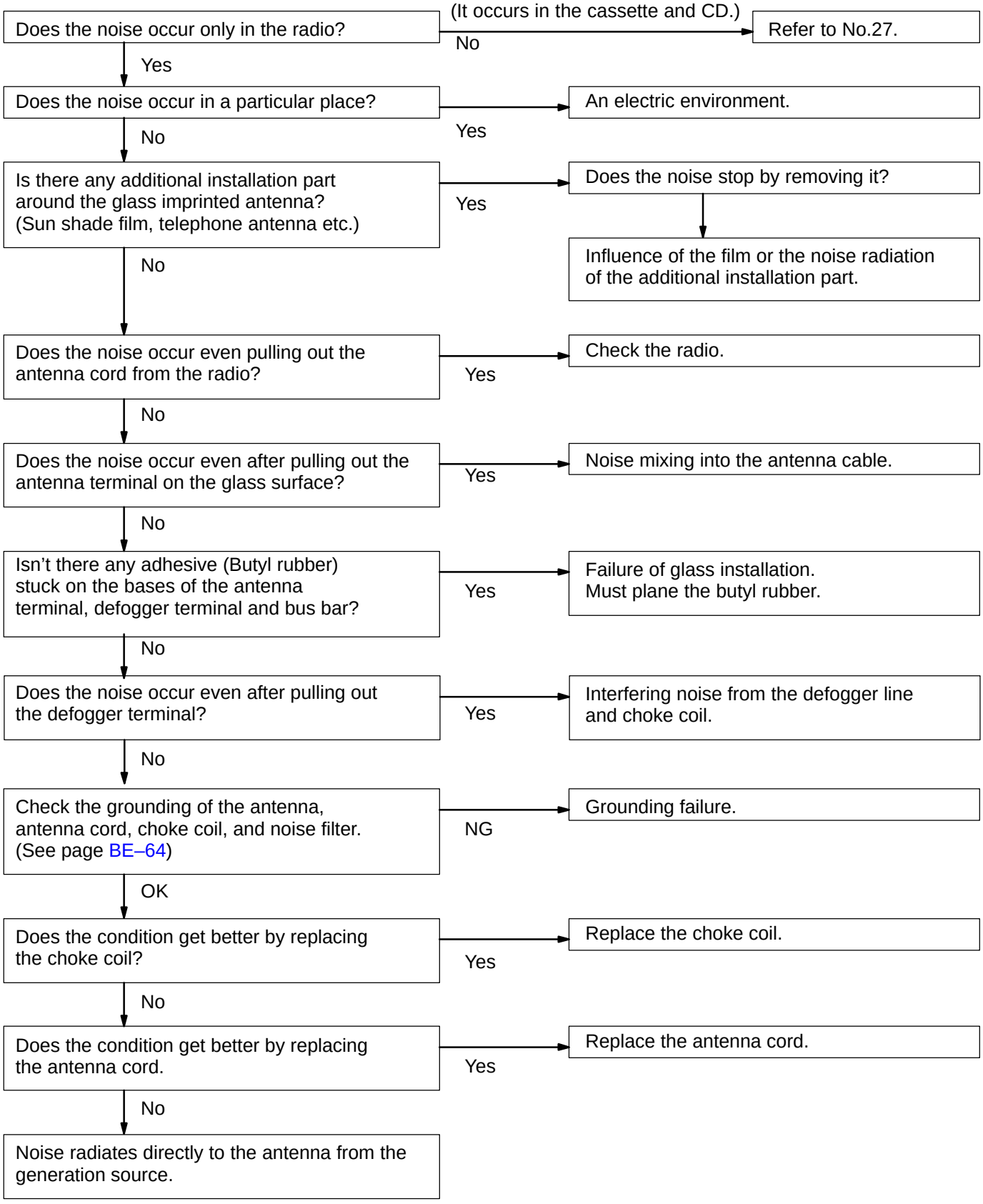

27	Noise	NOISE PRODUCED BY VIBRATION OR SHOCK WHILE DRIVING

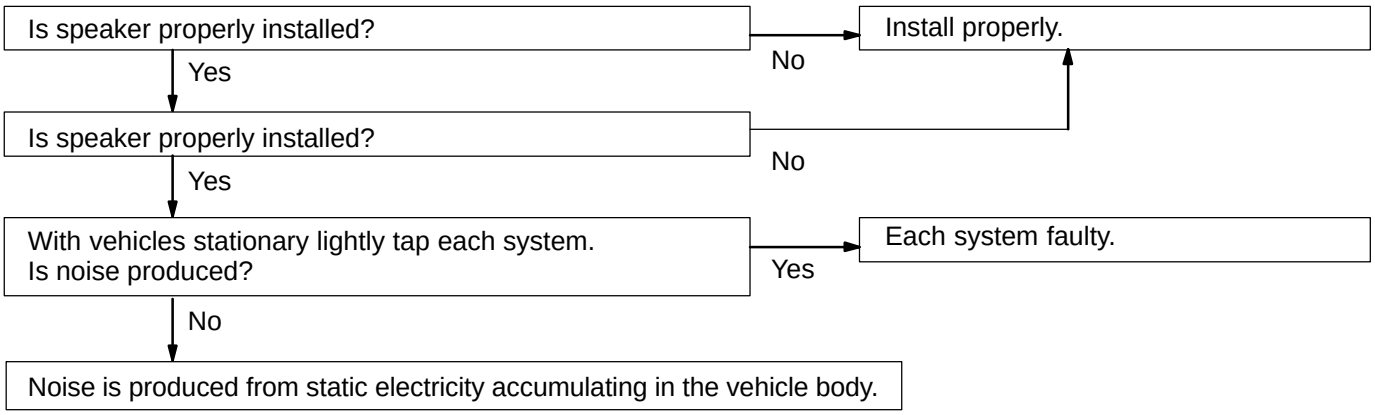

28	Noise	NOISE PRODUCED WHEN ENGINE STARTS

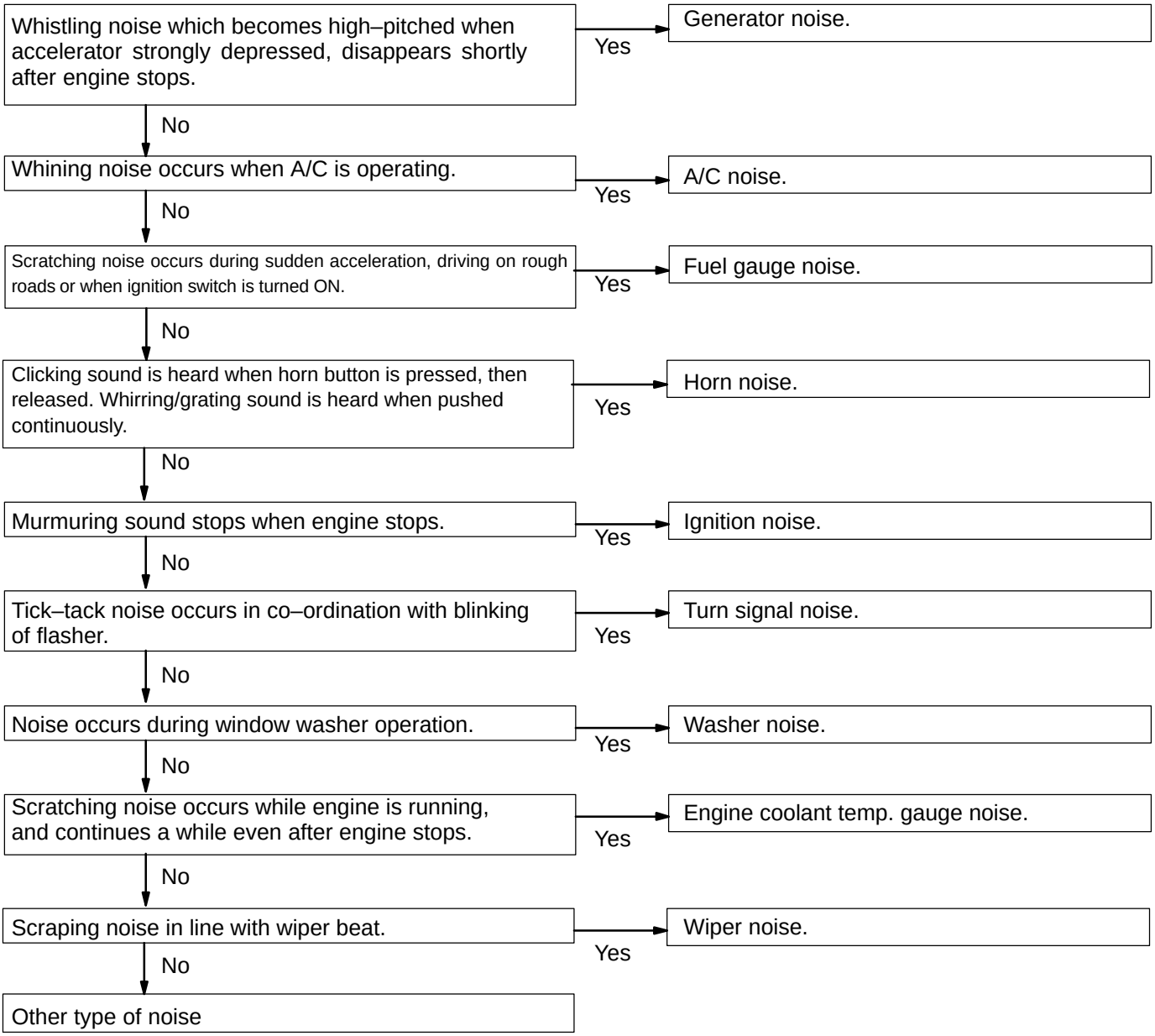

BODY ELECTRICAL SYSTEM

BE03R–03

PRECAUTION

HINT:

Take care to observe the following precautions when performing inspections or removal and replacement of body electrical related parts.

1. HEADLIGHT SYSTEM

Halogen bulbs have pressurized gas inside and require special handling. They can burst if scratched or dropped. Hold a bulb only by its plastic or metal case.

Don't touch the glass part of a bulb with bare hands.

2. SRS (SUPPLEMENTAL RESTRAINT SYSTEM)

The TOYOTA TACOMA is equipped with an SRS (Supplemental Restraint System) such as the driver airbag and front passenger airbag, failure to carry out service operation in the correct sequence could cause the SRS to unexpectedly deploy during servicing, possibly leading to a serious accident. Before servicing (including removal or installation of parts, inspection or replacement), be sure to read the precautionary notices in the RS section.

3. AUDIO SYSTEM

If the negative (–) terminal cable is disconnected from the battery, the preset AM, FM1 and FM2 stations stored in memory are erased, so be sure to note the stations and reset them after the battery terminal is reconnected.

4. MOBILE COMMUNICATION SYSTEM

If the vehicle is equipped with a mobile communication system, refer to precautions in the IN section.

BE24F–02

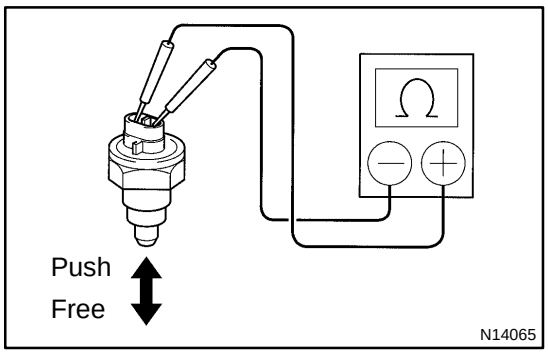

INSPECTION

1. INSPECT BACK–UP LIGHT SWITCH CONTINUITY

Condition	Tester connection	Specified condition
Free	–	No continuity
Push	1 – 2	Continuity

If continuity is not as specified, replace the switch.

2. INSPECT PARK/NEUTRAL POSITION SWITCH CONTINUITY

(A44D: See page AT–22)

(A340E, A340F: See page DI–482)

BACK–UP LIGHT SYSTEM

BE044–03

LOCATION

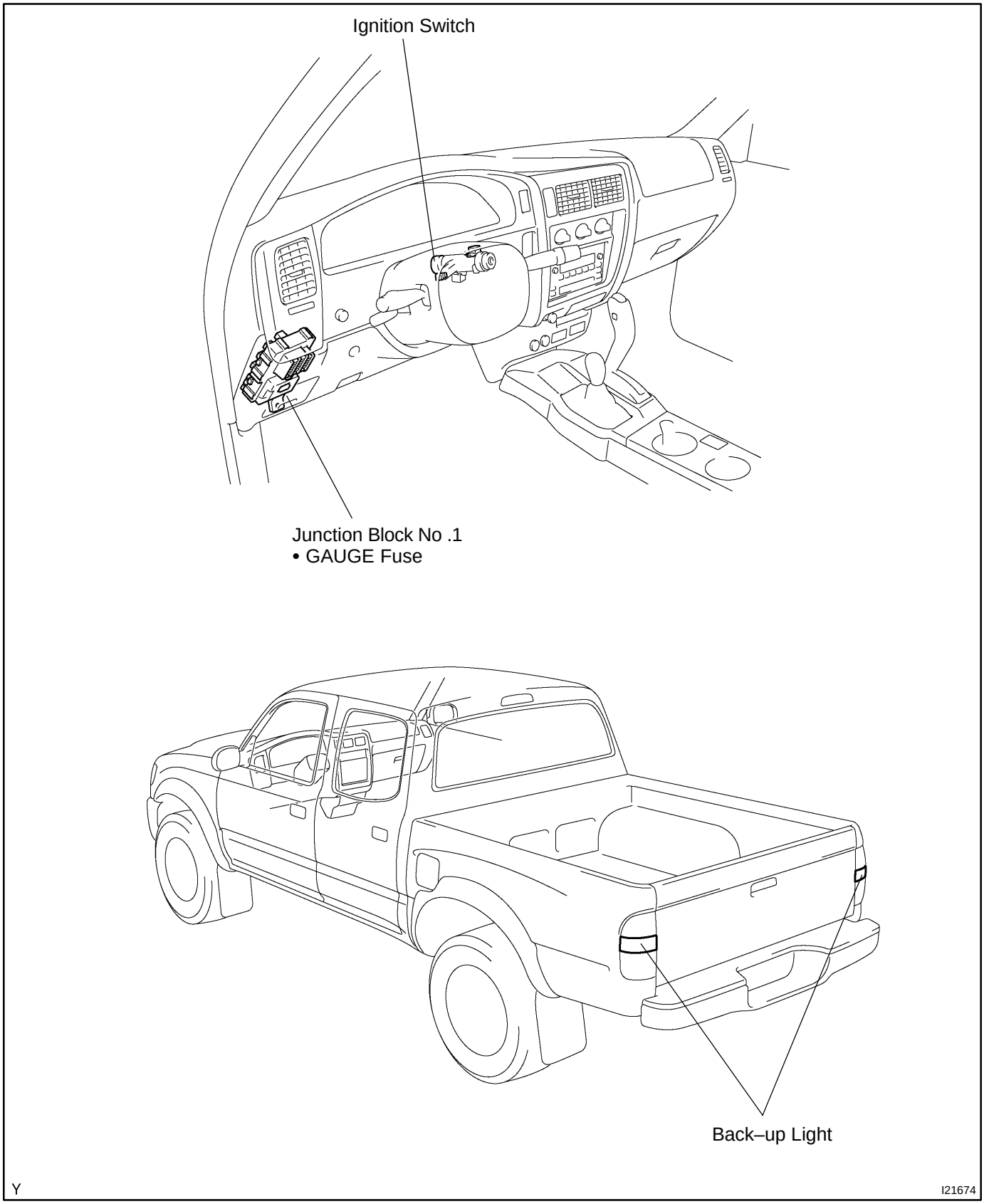

RZN Series

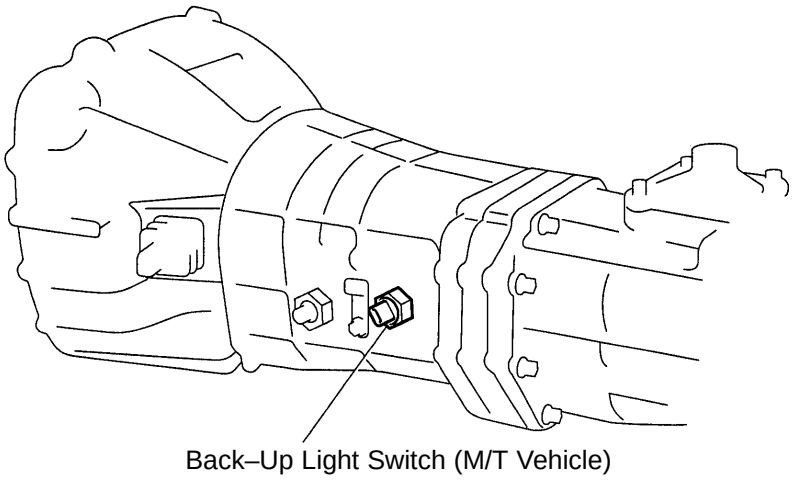

VZN Series

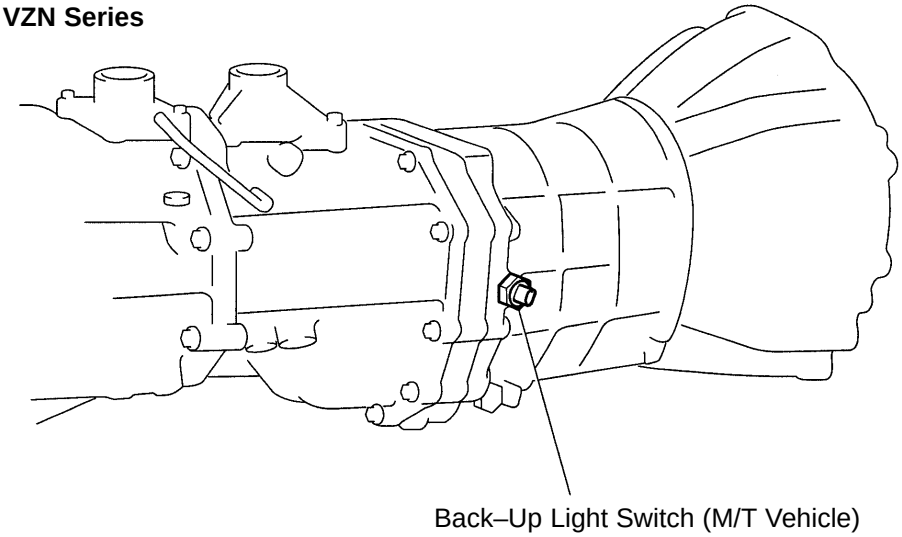

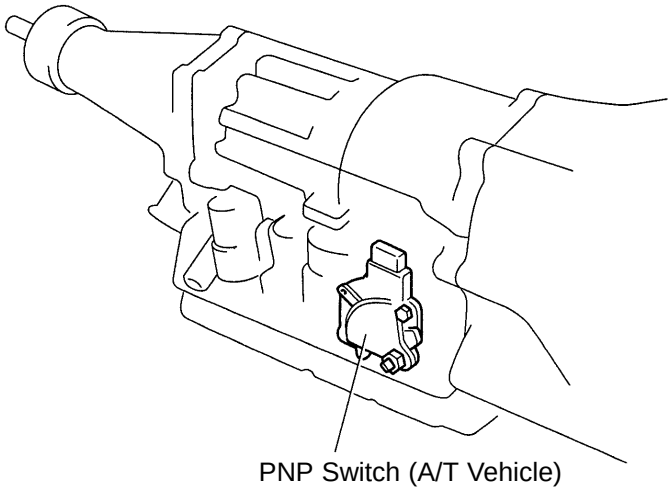

Z15350

CLOCK

TROUBLESHOOTING

BE04N–02

HINT:

Troubleshoot the clock according to the table below.

Clock will not operate	1
Clock loses or gains time	2

± 1.5 seconds / day

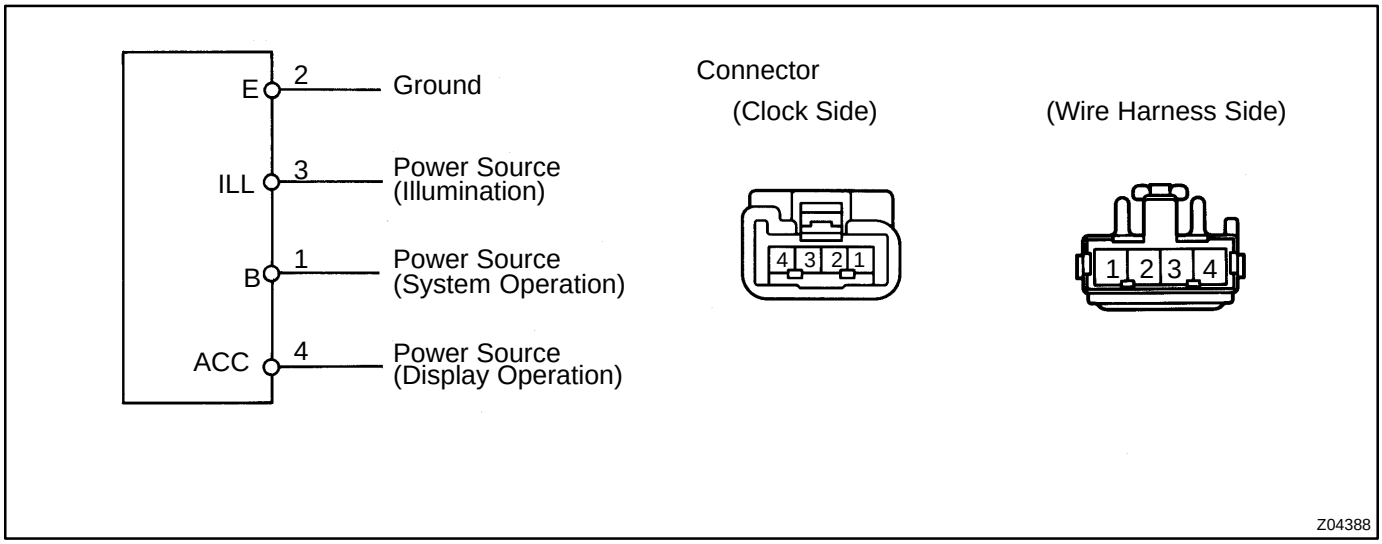

1	CLOCK WILL NOT OPERATE

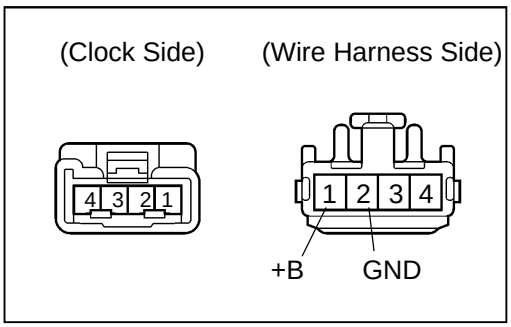

(a) Check that the battery positive voltage is 10 –14 V.
If voltage is not as specified, replace the battery.

(b) Check that the DOME fuse is not blown.
If the fuse is blown, replace the fuse and check for short circuit.

(c) Troubleshoot the clock as follows.
HINT:
Inspect the connector on the wire harness side.

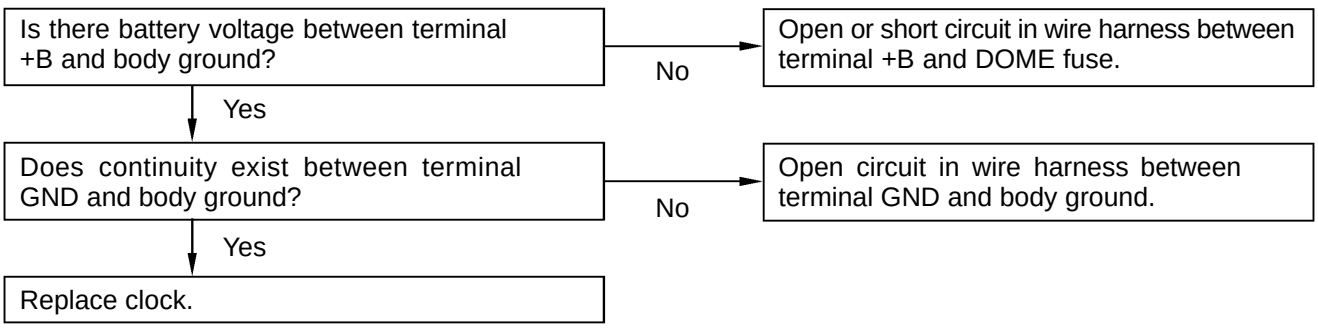

I01417

2	CLOCK LOSES OR GAINS TIME

(Clock Side)

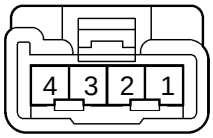

(Wire Harness Side)

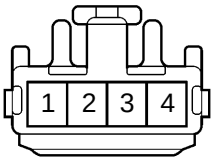

(a) Check that the battery positive voltage is 10–16 V.
If voltage is not as specified, replace the battery.

(b) Inspect the error of the clock.
Allowable error (per day): ± 1.5 sec.
If the error exceeds the allowable error, replace the clock.

(c) Check that the clock adjusting button is caught in position, and does not return.
If the button is not returned, repair or replace the clock.

(d) Troubleshoot the clock as follows.
HINT:
Inspect the connector on the wire harness side.

Is there 10 – 16 V between terminal +B and body ground?

Below 10V → Detect cause and repair, or recharge battery.

Yes → Adjust or replace clock.

I01418

BE04B–05

CIRCUIT

w/o Tachometer

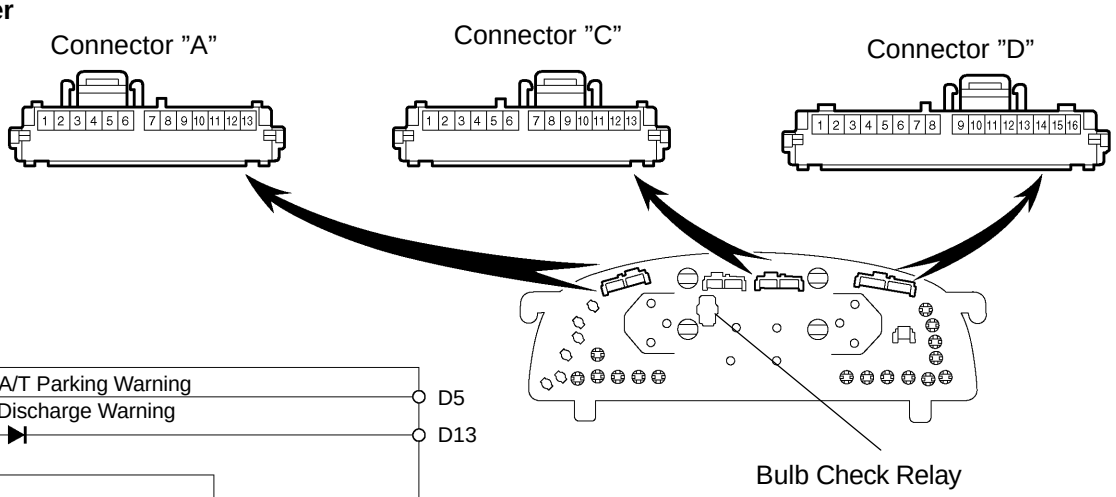

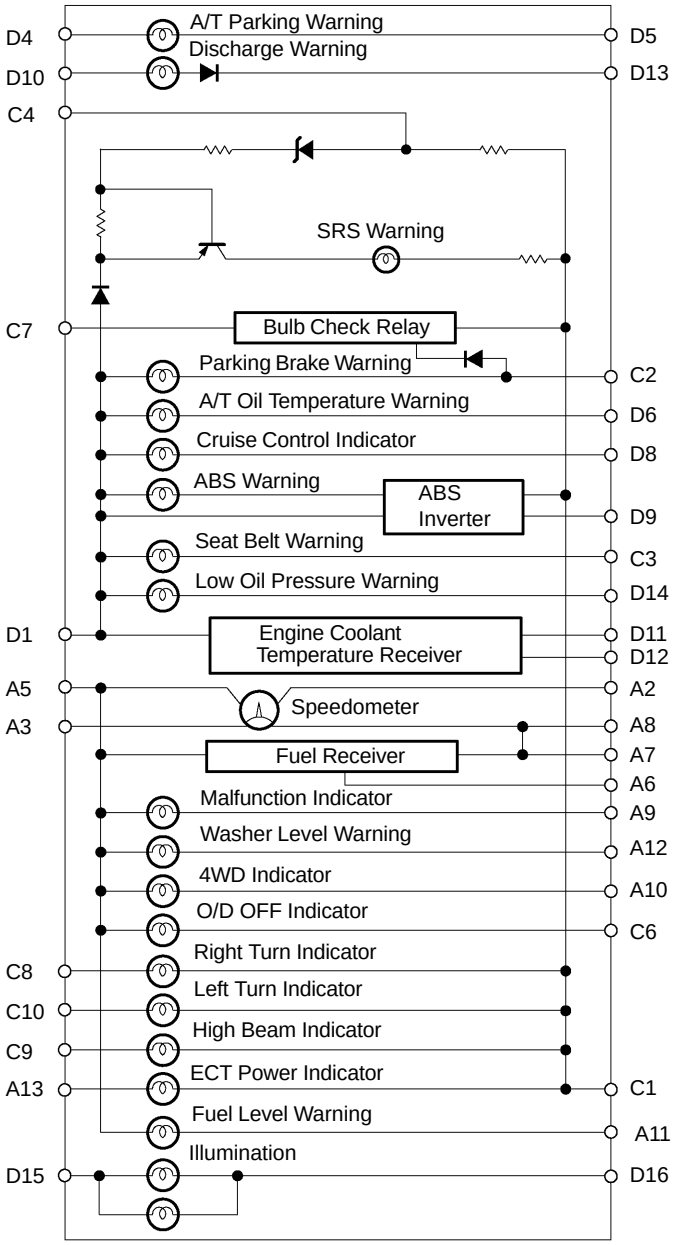

No.		Wiring connector side
A	2	Vehicle Speed Sensor
	3	ECM, Cruise Control ECU, 4WD ECU
	5	GAUGE Fuse
	6	Fuel Sender Gauge
	7	Ground
	8	Vehicle Speed Sensor
	9	ECM
	10	4WD ECU
	11	Fuel Level Warning Switch
	12	Washer Level Waring Switch
	13	Pattern Select Switch
C	1	Ground
	2	Parking Brake Switch, Brake Fluid Level Warning Switch
	3	Body ECU
	4	Air Bag Sensor Assembly
	6	O/D OFF Switch
	7	STARTER Relay
	8	Right Turn Signal Switch
	9	Headlight Dimmer Switch
	10	Left turn Signal Switch
D	1	GAUGE Fuse
	4	Park/Neutral Position Switch
	5	ECM
	6	A/T Oil Temperature Switch
	8	Cruise Control ECU
	9	ABS ECU
	10	IGN Fuse
	11	Engine Coolant Temperature Sender Gauge
	12	Ground
	13	Generator L Terminal
	14	Low Oil Pressure Warning Switch
	15	TAIL Fuse
	16	Light Control Rheostat

Y

I23881

w/ Tachometer

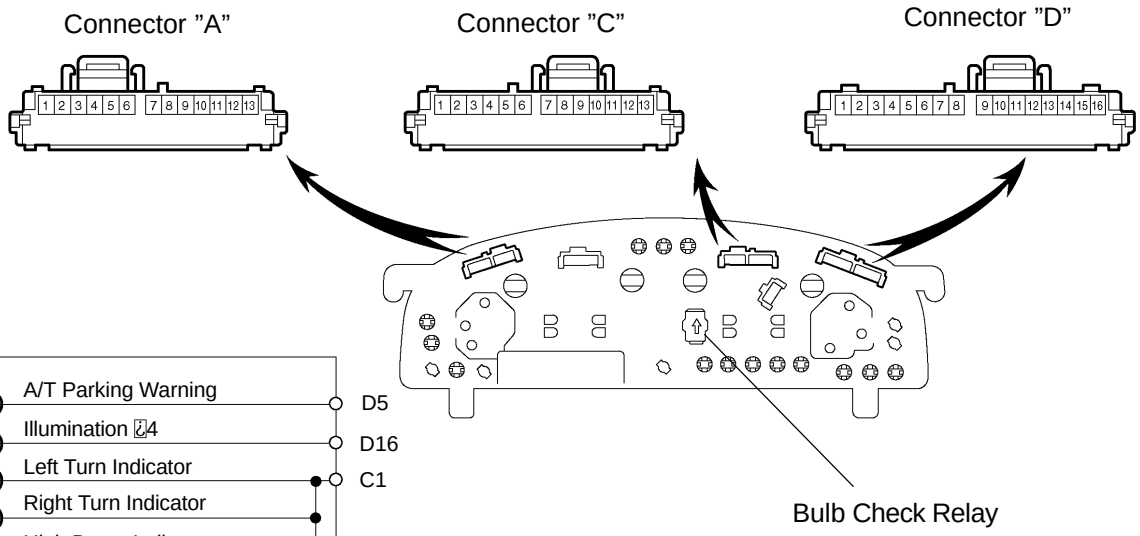

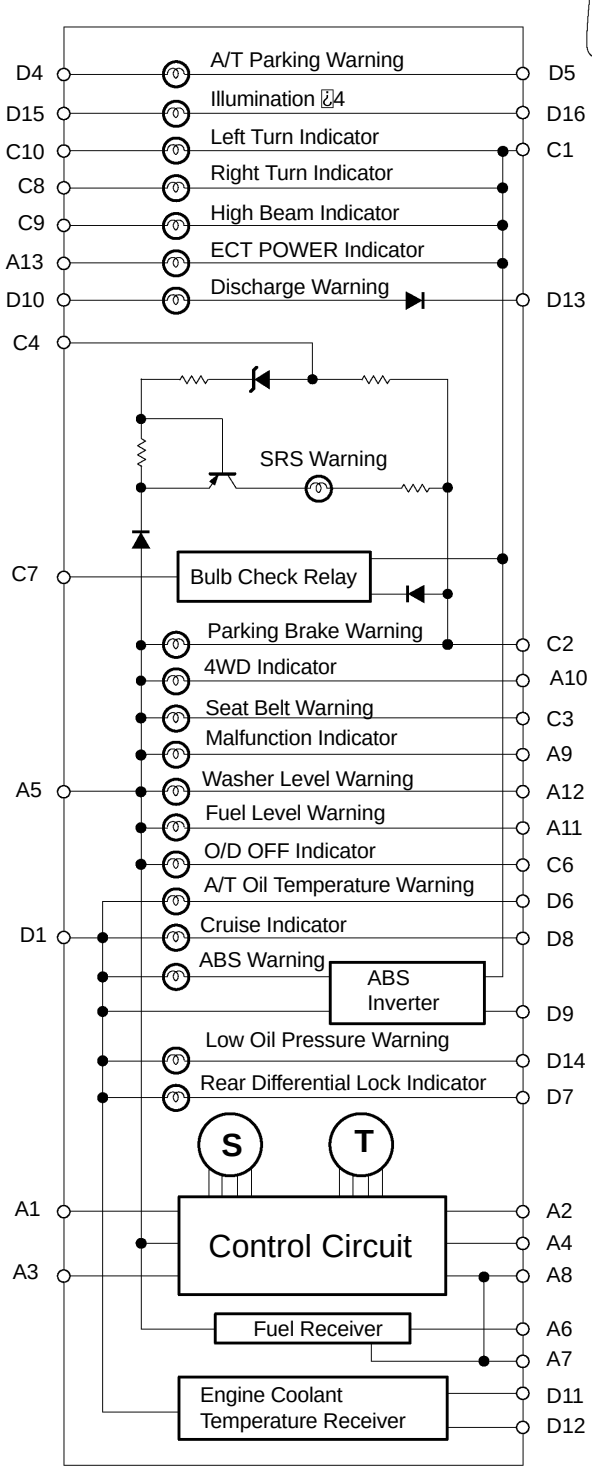

No.		Wire Harness Side
A	1	DOME Fuse
	2	Vehicle Speed Sensor
	3	ECM, Cruise Control ECU, 4WD ECU, Rear Diff. Lock ECU
	4	Igniter (5VZ–FE), ECM (3RZ–FE, 2RZ–FE)
	5	GAUGE Fuse
	6	Fuel Sender Gauge
	7	Ground
	8	Vehicle Speed Sensor
	9	ECM
	10	4WD ECU
	11	Fuel Level Warning Switch
	12	Washer Level Warning Switch
	13	Pattern Select Switch
C	1	Ground
	2	Parking Brake Switch, Brake Fluid Level Warning Switch
	3	Seat Belt Buckle Switch
	4	Airbag Sensor Assembly
	6	O/D OFF Switch
	7	STARTER Relay
	8	Right Turn Signal Switch
	9	Headlight Dimmer Switch
	10	Left Turn Signal Switch
D	1	GAUGE Fuse
	4	Park/Neutral Position Switch
	5	ECM
	6	A/T Oil Temperature Switch
	7	Rear Differential Lock Switch
	8	Cruise Control ECU
	9	ABS ECU
	10	IGN Fuse
	11	Engine Coolant Temperature Sender Gouge
	12	Ground
	13	Generator L Terminal
	14	Low Oil Pressure Warning Switch
	15	TAIL Fuse
	16	Light Control Rheostat

Y

I23880

BE24J–01

INSPECTION

1. INSPECT SPEEDOMETER ON–VEHICLE

Using a speedometer tester, inspect the speedometer for allowable indication error and check the operation of the odometer.
HINT:
Tire wear and tire over or under inflation will increase the indication error.
If error is excessive, replace the speedometer.

USA (mph)		CANADA (km/h)	
Standard indication	Allowable range	Standard indication	Allowable range
20	19 – 22	20	18 – 23
40	39 – 42.5	40	40 – 44
60	59.5 – 63.5	60	60 – 64.5
80	79.5 – 84	80	80 – 85
100	100 – 105	100	100 – 105
		120	120 – 125.5
		140	140 – 146
		160	160 – 167

2. INSPECT VEHICLE SPEED SENSOR OPERATION

(a) Connect the positive (+) lead from the battery to terminal 1 and negative (–) lead to terminal 2.
(b) Connect the positive (+) lead from the tester to terminal 3 and the negative (–) lead to terminal 2.
(c) Rotate the shaft.
(d) Check that there is voltage change from approx. 0 V to 11 V or more between terminals 2 and 3.

HINT:
The voltage change should be performed 4 times for every revolution of the speed sensor shaft.
If operation is not as specified, replace the sensor.

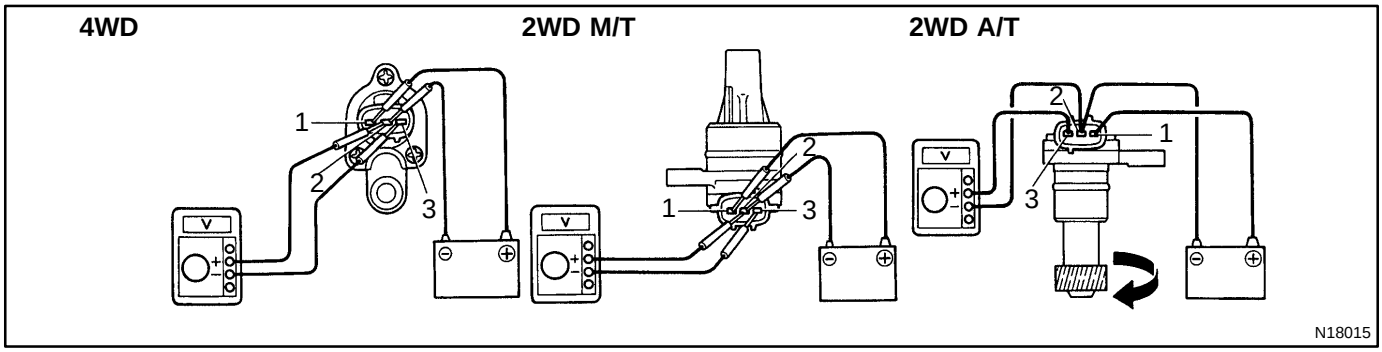

3. INSPECT TACHOMETER (ON–VEHICLE)

(a) Connect a tune–up test tachometer, and start the engine.

NOTICE:

- **Reversing the connection of the tachometer will damage the transistors and diodes inside.**
- **When removing or installing the tachometer, be careful not to drop or subject it to heavy shocks.**

(b) Compare the tester and tachometer indications.

DC 13.5 V 20˚C at (68˚F)

Standard indication (rpm)	Allowable range (rpm)
700	630 – 770
3,000	2,850 – 3,150
5,000	4,850 – 5,150
7,000	6,790 – 7,210

If error is excessive, replace the tachometer.

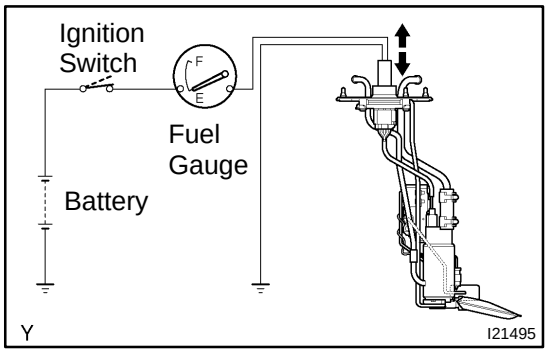

4. INSPECT FUEL RECEIVER GAUGE OPERATION

(a) Disconnect the connector from the sender gauge.

(b) Turn the ignition switch ON, check that the receiver gauge needle indicates EMPTY.

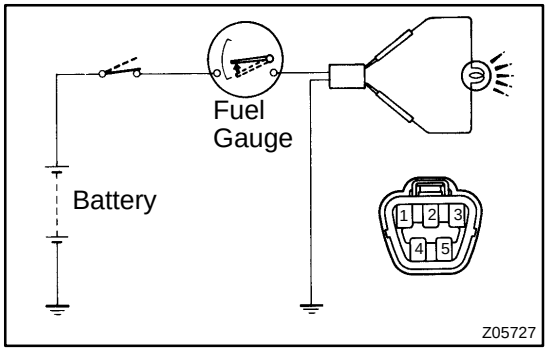

(c) Connect terminals 2 and 3 on the wire harness side connector through a 3.4 W test bulb.

(d) Turn the ignition switch ON, check that the bulb lights up and the receiver gauge needle moves toward FULL side.

HINT:

Because of the silicon oil in the gauge, it will take a short time for needle to stabilize.

If operation is not as specified, inspect the receiver gauge resistance.

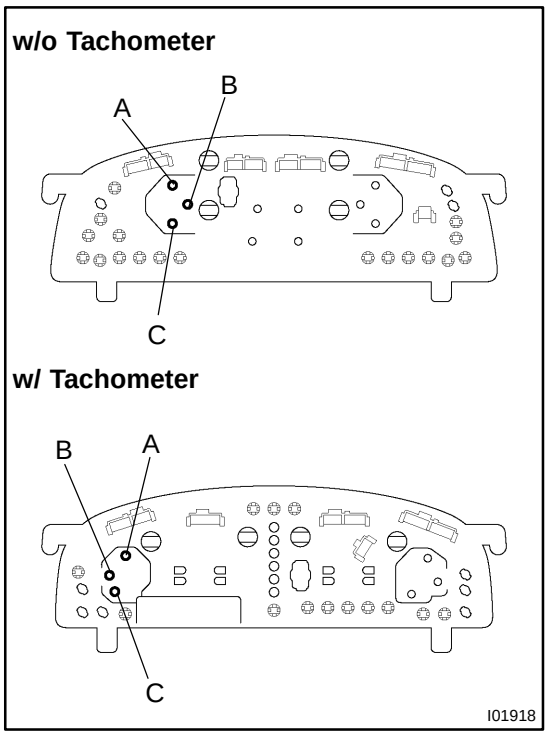

5. INSPECT FUEL RECEIVER GAUGE RESISTANCE

Measure the resistance between terminals.

w/ Tachometer:

Between terminals	Resistance (Ω)
A – B	Approx. 137
A – C	Approx. 260.3
B – C	Approx. 123.3

w/o Tachometer:

Between terminals	Resistance (Ω)
A – B	Approx. 160
A – C	Approx. 84
B – C	Approx. 244

If resistance value is not as specified, replace the receiver gauge.

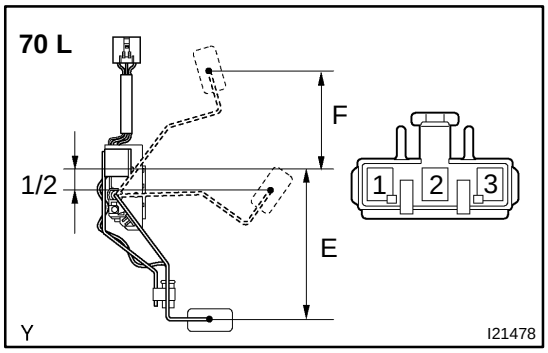

6. INSPECT FUEL SENDER GAUGE RESISTANCE

Measure the resistance between terminals 2 and 3.

70 liter tank:

Float position mm (in.)	Resistance (Ω)
F: Approx. 82.7 (3.26)	F: Approx. 3.0
1/2: 17.1 (0.67)	1/2: Approx. 30.8
E: Approx. 124.6 (4.91)	E: Approx. 110.0

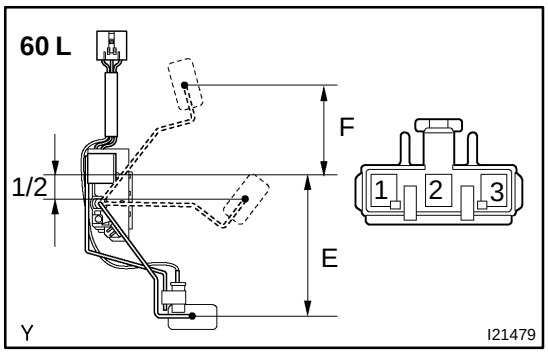

60 liter tank:

Float position mm (in.)	Resistance (Ω)
F: Approx. 69.3 (2.73)	F: Approx. 3.0
1/2: 20.1 (0.79)	1/2: Approx. 30.8
E: Approx. 108.8 (4.28)	E: Approx. 110.0

If resistance value is not as specified, replace the sender gauge.

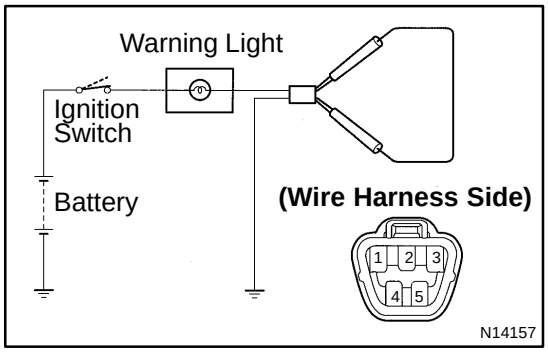

7. INSPECT FUEL LEVEL WARNING LIGHT

(a) Disconnect the connector from the sender gauge.
(b) Connect terminals 1 and 3 on the wire harness side connector.
(c) Turn the ignition switch ON and check that the warning light lights up.

If the warning light does not light up, test the bulb.

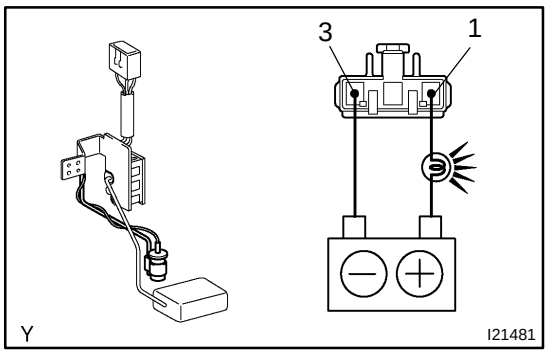

8. INSPECT FUEL LEVEL WARNING SWITCH

(a) Apply battery positive voltage between terminals 1 and 3, and through a 3.4 W test bulb, and check that the bulb lights up.

HINT:

It will take a short time for bulb to light up.

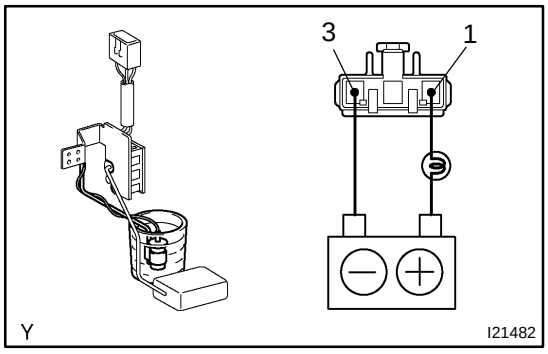

(b) Submerge the switch in fuel and check that the bulb goes out.

If operation is not as specified, replace the sender gauge.

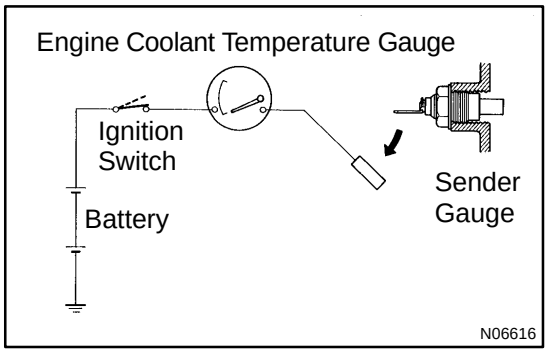

9. INSPECT ENGINE COOLANT TEMPERATURE RECEIVER GAUGE OPERATION

(a) Disconnect the connector from the sender gauge.

(b) Turn the ignition switch ON and check that the receiver gauge needle indicates COOL.

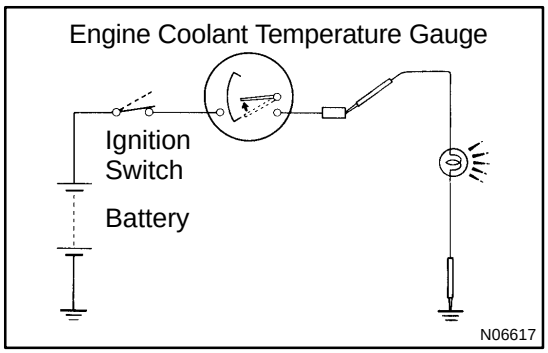

(c) Ground terminal on the wire harness side connecter through a 3.4 W test bulb.

(d) Turn the ignition switch ON, and check that the bulb lights up and the receiver gauge needle moves to the hot side.

If operation is as specified, replace the sender gauge. Then, recheck the system.

If operation is not as specified, measure the receiver gauge resistance.

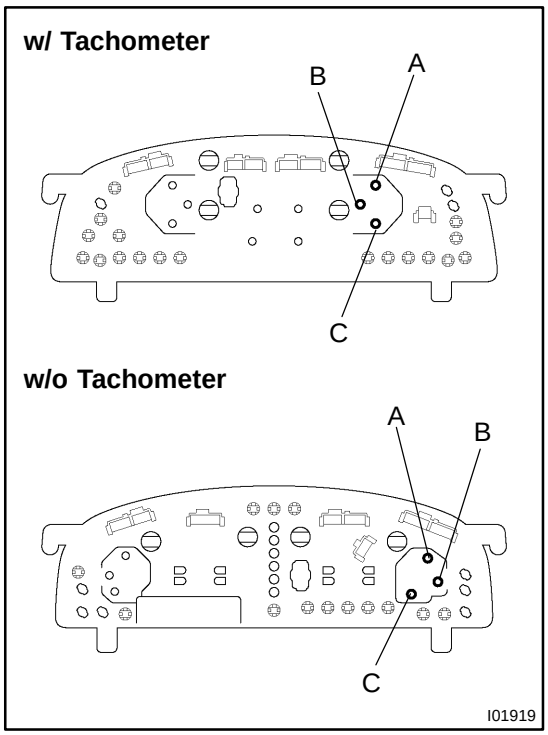

10. INSPECT ENGINE COOLANT TEMPERATURE RECEIVER GAUGE RESISTANCE

Measure the resistance between terminals.

w/ Tachometer

Between terminals	Resistance (Ω)
A – B	Approx. 256.5
A – C	Approx. 181.5
B – C	Approx. 75

w/o Tachometer

Between terminals	Resistance (Ω)
A – B	Approx. 139
A – C	Approx. 75
B – C	Approx. 214

HINT:

Connect the test leads so that the current from the ohmmeter can flow according to the above order. This circuit includes the diode.

If resistance value is not as specified, replace the receiver gauge.

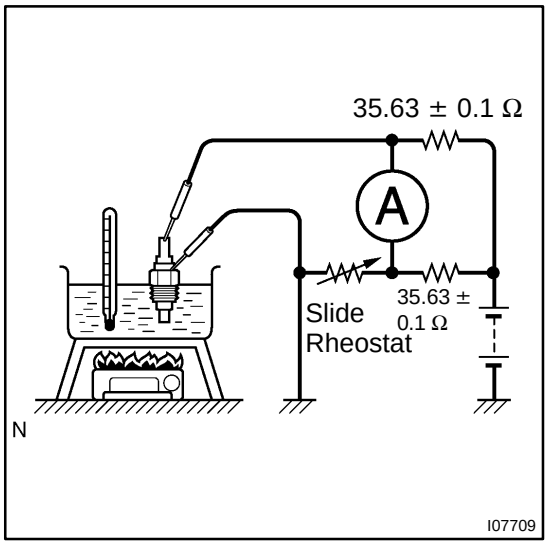

11. INSPECT ENGINE COOLANT TEMPERATURE SENDER GAUGE RESISTANCE

Connect the wire harness as shown in the illustration, and adjust the ammeter pointer to indicate ”0” using the slide rheostat, then read the rheostat indication.

Temperature ˚C (˚F)	Resistance (Ω)
50 (122.0)	160 – 240
120 (248.0)	17.1 – 21.2

If resistance value is not as specified, replace the engine coolant temperature sender gauge.

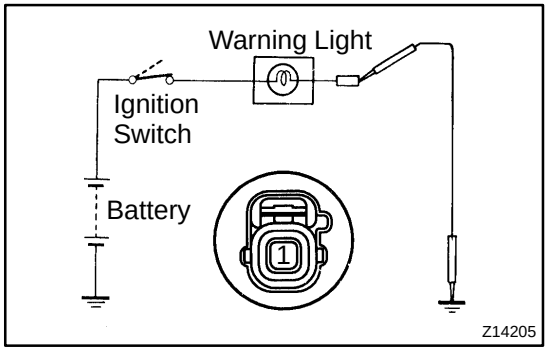

12. INSPECT LOW OIL PRESSURE WARNING LIGHT

(a) Disconnect the connector from the warning switch and ground terminal on the wire harness side connector.

(b) Turn the ignition switch ON and check that the warning light lights up.

If the warning light does not light up, test the bulb.

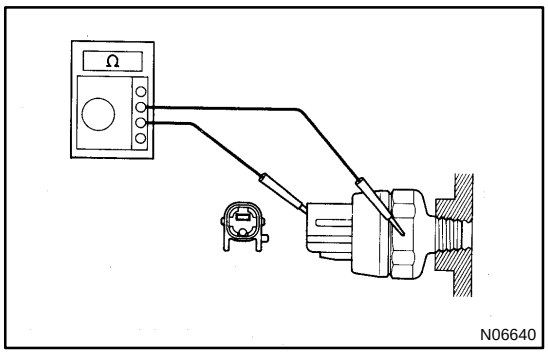

13. INSPECT LOW OIL PRESSURE SWITCH

(a) Disconnect the connector from the switch.
(b) Check that continuity exists between terminal and ground with the engine stopped.
(c) Check that no continuity exists between terminal and ground with the engine running.

HINT:

Oil pressure should be over 49 kPa (0.5 kgf/cm^2, 7.1 psi).

If operation is not as specified, replace the switch.

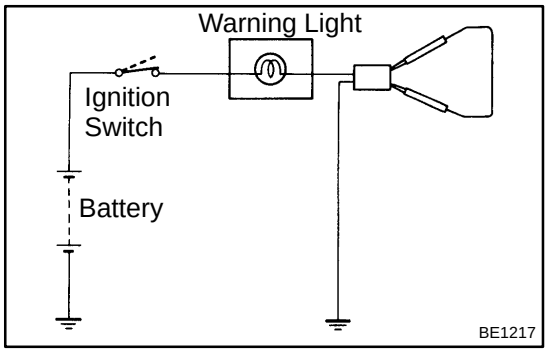

14. INSPECT BRAKE WARNING LIGHT

(a) Disconnect the connectors from the level warning switch and parking brake switch.
(b) Connect terminals on the wire harness side connector of the level warning switch connector.
(c) Turn the ignition switch ON and check that the warning light lights up.

If the warning light does not light up, test the bulb.

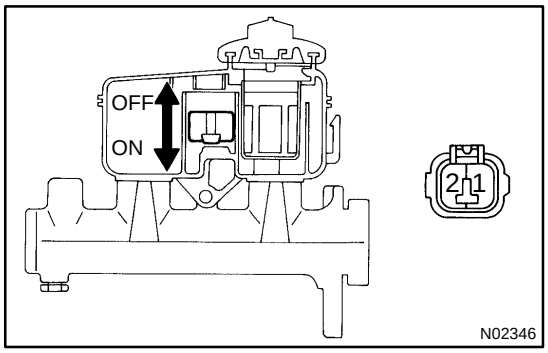

15. INSPECT BRAKE FLUID LEVEL WARNING SWITCH CONTINUITY

(a) Check that no continuity exists between terminals with the switch OFF (float up).
(b) Check that continuity exists between terminals with the switch ON (float down).

If operation is not as specified, replace the switch.

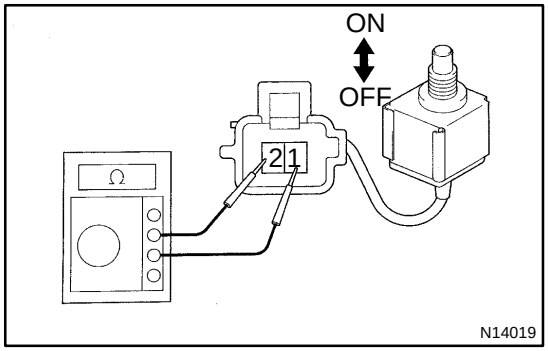

16. INSPECT PARKING BRAKE SWITCH CONTINUITY

(a) Check that continuity exists between terminals with the switch ON (switch pin released).
(b) Check that no continuity exists between terminals with the switch OFF (switch pin pushed in).

If operation is not as specified, replace the switch.

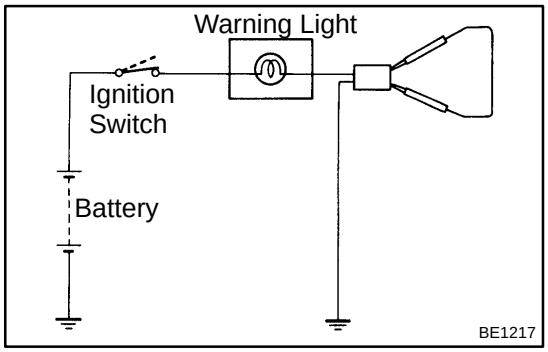

17. INSPECT WASHER LEVEL WARNING LIGHT

(a) Disconnect the connectors from the level warning switch and parking brake switch.
(b) Connect terminals on the wire harness side connector of the level warning switch connector.
(c) Remove the CHARGE fuse and turn the ignition switch ON, and check that the warning light comes on.

If the warning light does not light up, test the bulb.

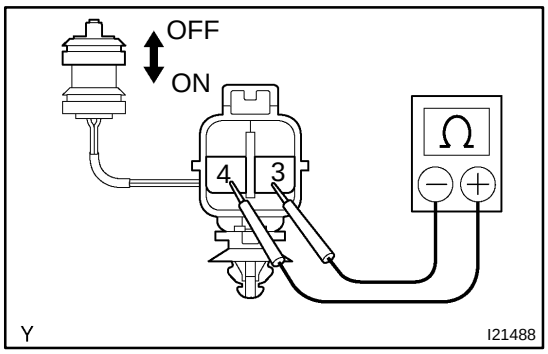

18. INSPECT WASHER LEVEL SWITCH

(a) Check that no continuity exists between terminals 3 and 4 with the switch OFF (float up).

(b) Check that continuity exists between terminals 3 and 4 with the switch ON (float down).

If operation is not as specified, replace the switch.

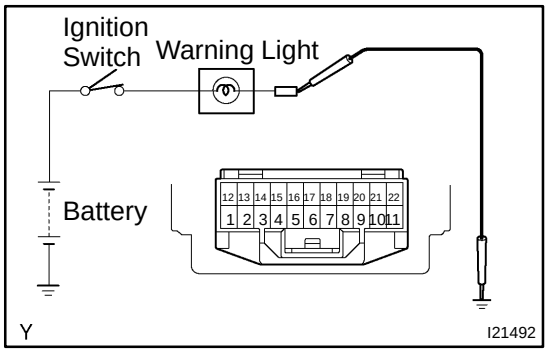

19. INSPECT SEAT BELT WARNING LIGHT

(a) Remove the body ECU connector from the No.1 J/B.

(b) Ground terminal 19 on the wire harness side connector.

(c) Turn the ignition switch ON and check that the warning light lights up.

If the warning light does not light up, inspect the bulb or wire harness.

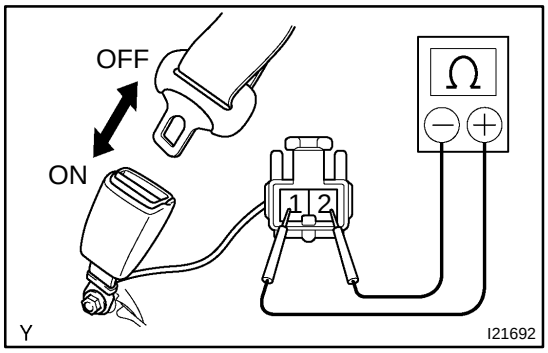

20. INSPECT BUCKLE SWITCH CONTINUITY

(a) Check that continuity exists between terminals on the switch side connector with the switch ON (belt unfastened).

(b) Check that no continuity exists between terminals on the switch side connector with the switch OFF (belt fastened).

If operation is not as specified, replace the seat belt inner.

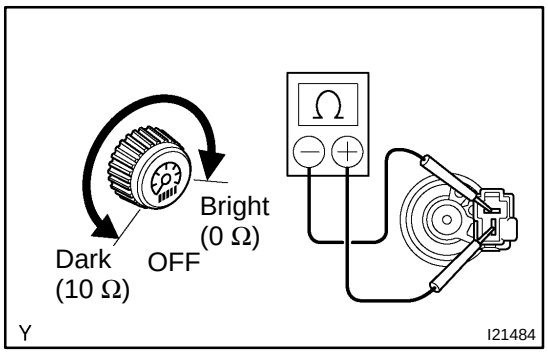

21. w/o Tachometer (Resister Type): INSPECT LIGHT CONTROL RHEOSTAT

(a) Turn the rheostat knob OFF and check that no continuity exists between terminals (Rheostat knob turned to fully counterclockwise).

(b) Gradually, turn the rheostat knob from the dark side to bright side and check that the resistance decreases from 10 to 0 Ω.(Rheostat knob turned to clockwise)

If operation is not as specified, replace the rheostat.

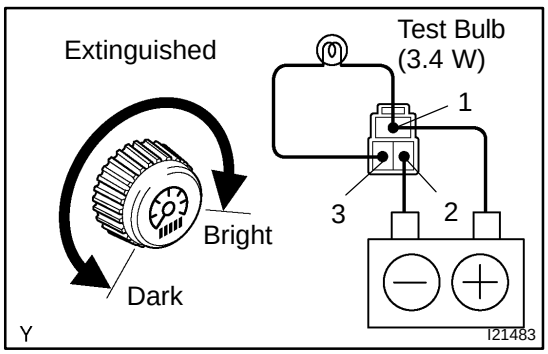

22. w/ Tachometer (Electrical Type): INSPECT LIGHT CONTROL RHEOSTAT

(a) Connect terminals 1 and 3 through a 3.4 W test bulb.

(b) Connect the positive (+) lead from the battery to terminal 1 and the negative (–) lead to terminal 2.

(c) Turn the rheostat knob to fully counterclockwise and check that the test bulb goes out.

(d) Gradually turn the rheostat knob to clockwise and check that the test bulb brightness changes from dark to bright.

If operation is not as specified, replace the rheostat.

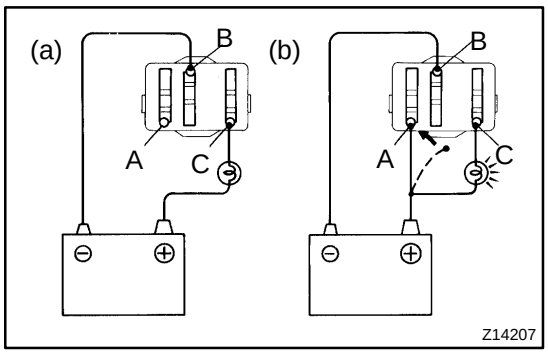

23. INSPECT BULB CHECK RELAY OPERATION

(a) Connect the positive (+) lead from the battery to terminal C through a 1.4 W test bulb and the negative (–) lead to terminal B, check that the test bulb does not light up.

(b) Connect the positive (+) lead from the battery to terminal A and check that the test bulb lights up.

If operation is not as specified, replace the relay.

COMBINATION METER

LOCATION

BE24I–01

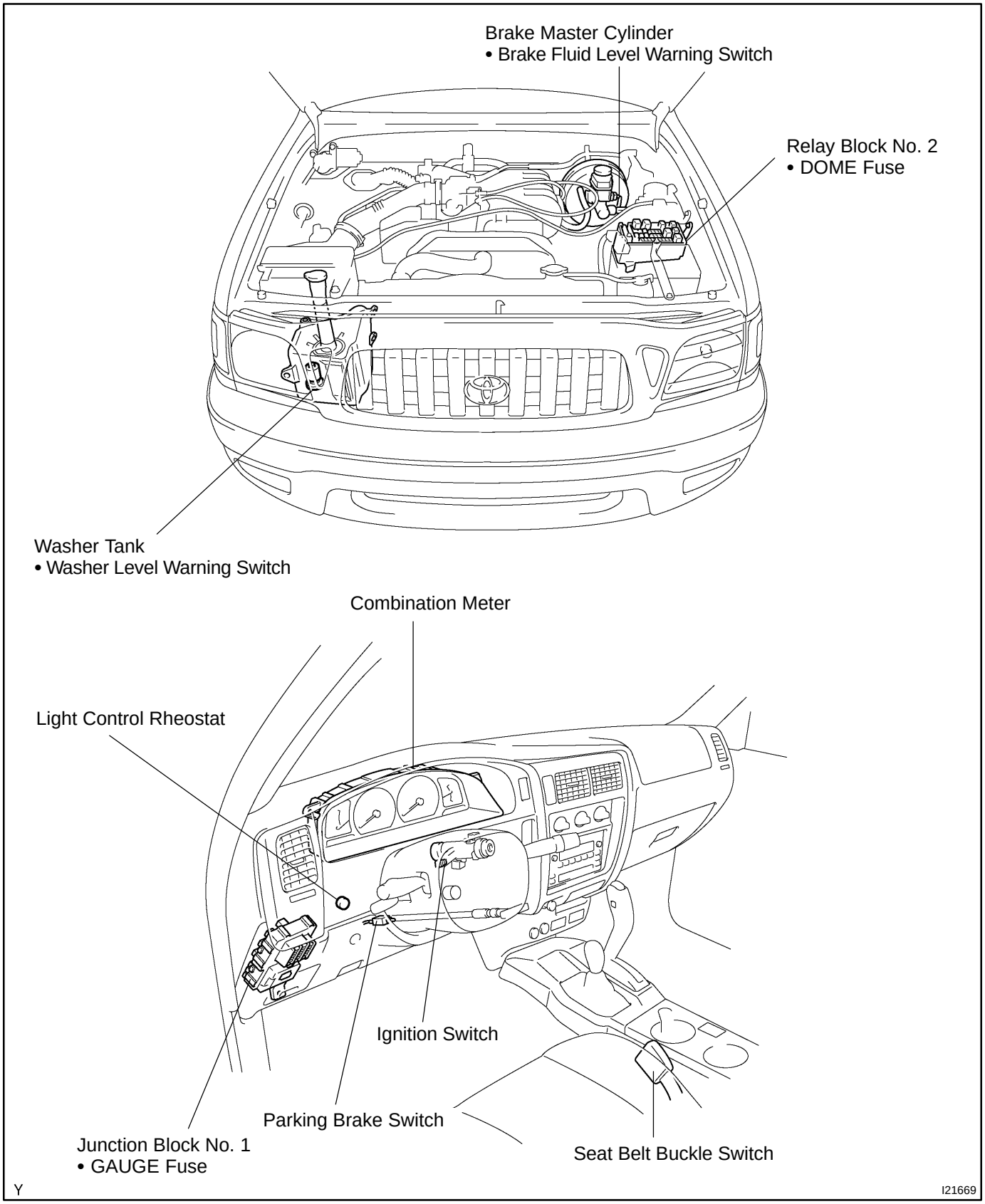

RZN Series

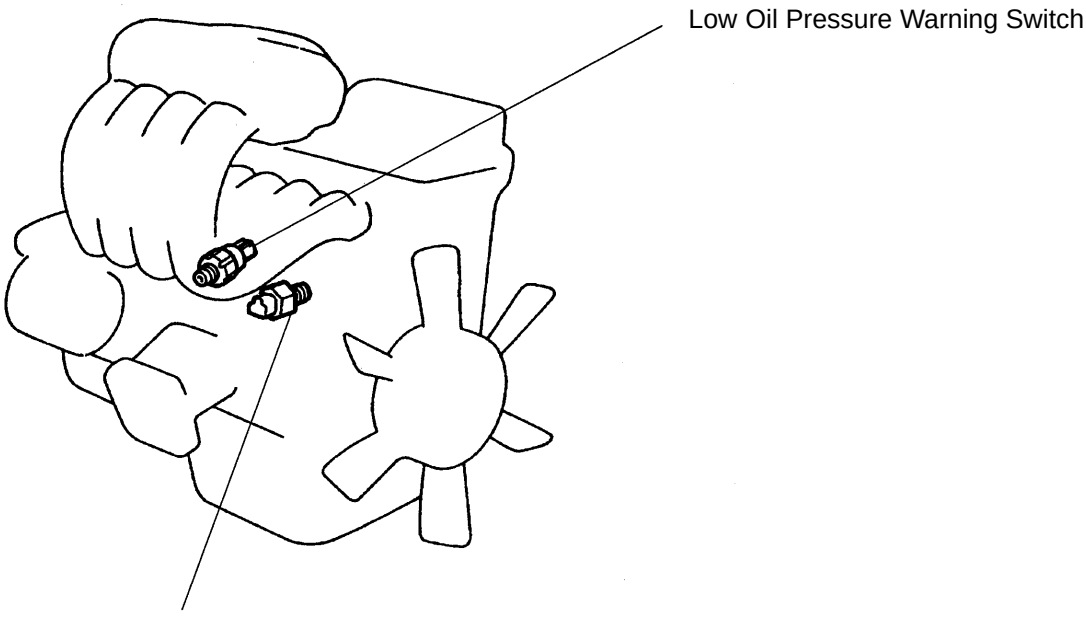

VZN Series

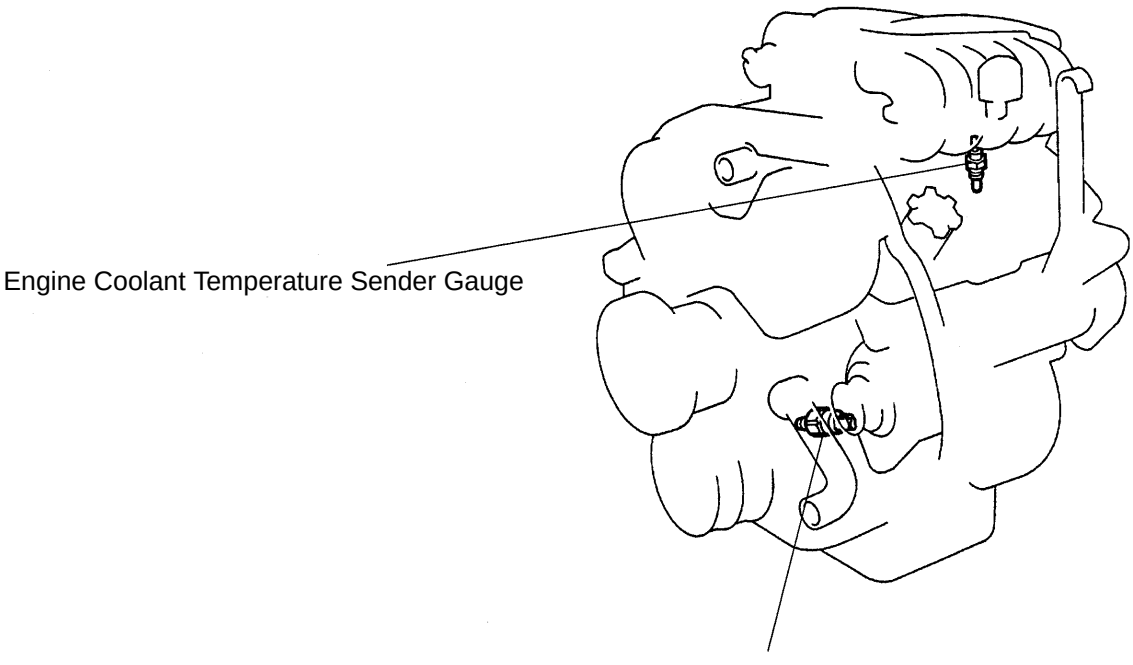

N14496

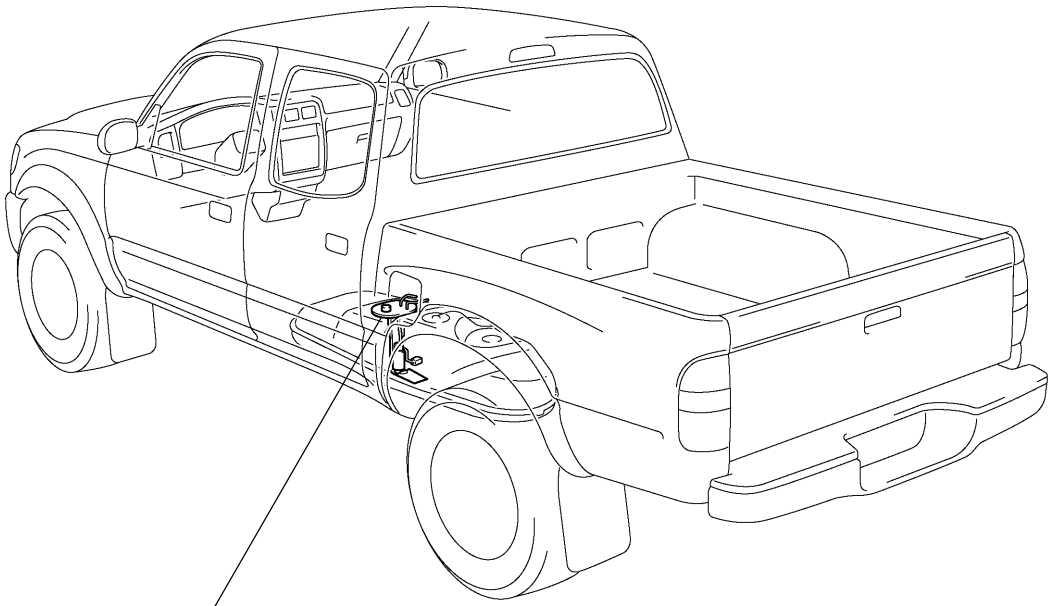

Fuel Tank
• Fuel Sender Gauge

Y

I21670

BE24D–01

ADJUSTMENT

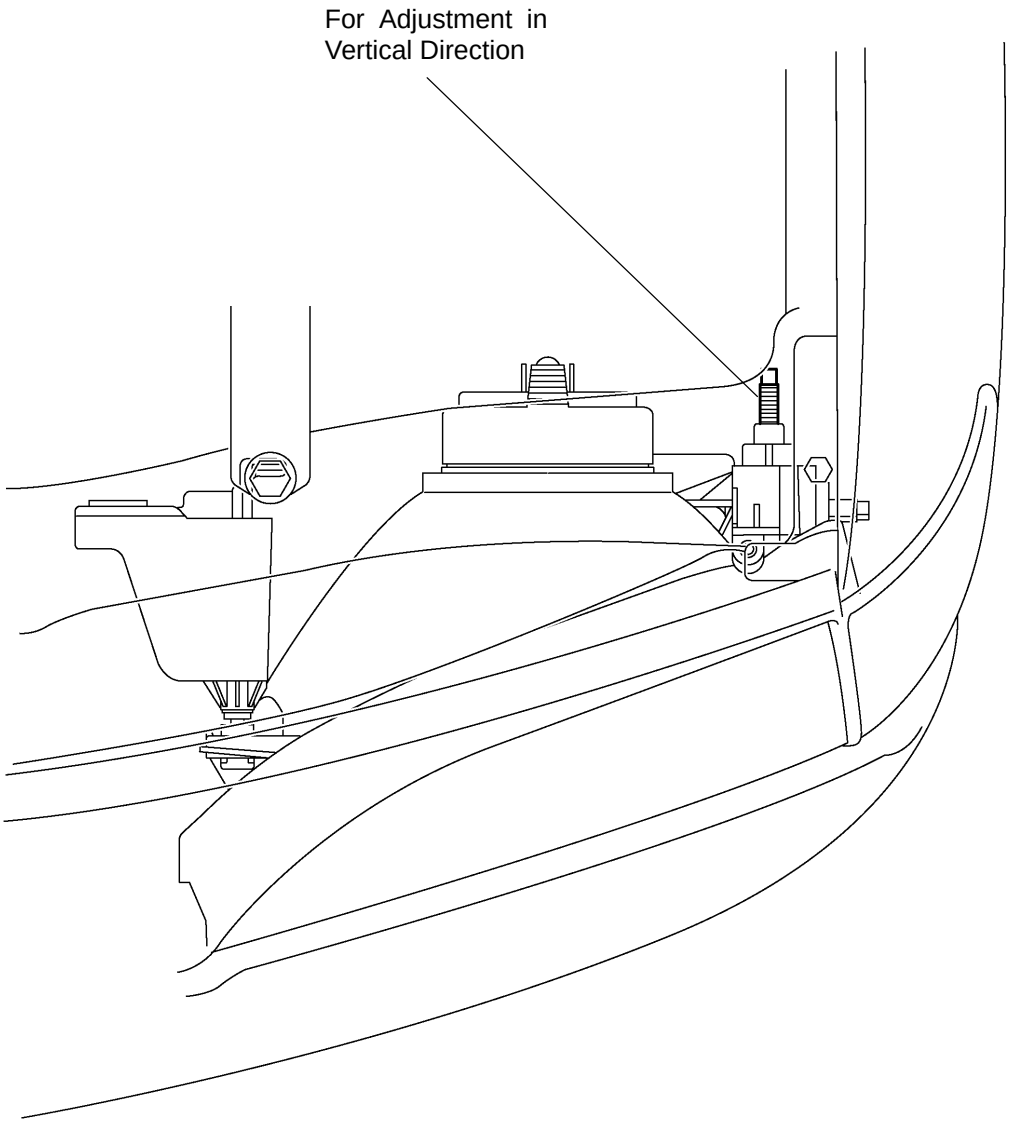

Y

I21682

ADJUST HEADLIGHT AIM

(a) Place the vehicle in the following conditions.
- The area around the headlight is not deformed.
- The vehicle is parked on a level surface.
- Tire inflation pressure is the specified value.
- A driver is in the driver's seat and the vehicle is in a state ready for driving (with a tank full).
- The vehicle has been bounced several times.

(b) Check the headlight aiming.
(1) Prepare a thick white paper.
(2) Stand the paper perpendicular to the ground at the position 9.84 ft away from the headlights.
(3) Ensure that the center line of the vehicle and the paper face forms a 90–degree angle as shown in the illustration.
(4) Draw a horizontal line (H line) on the paper, showing where the headlights should strike.
(5) Draw a vertical line (V line) to where the center line of the vehicle is to be.
(6) Draw 2 vertical lines to where the both headlights should strike (V RH and V LH lines).
(7) Draw a horizontal line (by connecting the both low beam center marks) to where the headlights should strike (H RH and H LH lines).

HINT:
The H RH and H LH line is 0.4° below the horizontal line (H line) of the light axis.

(8) Start the engine.
(9) Turn the headlights ON.
(10) Check that the headlights properly strike the position shown in the illustration.
(11) If not, adjust the lights in the vertical direction.

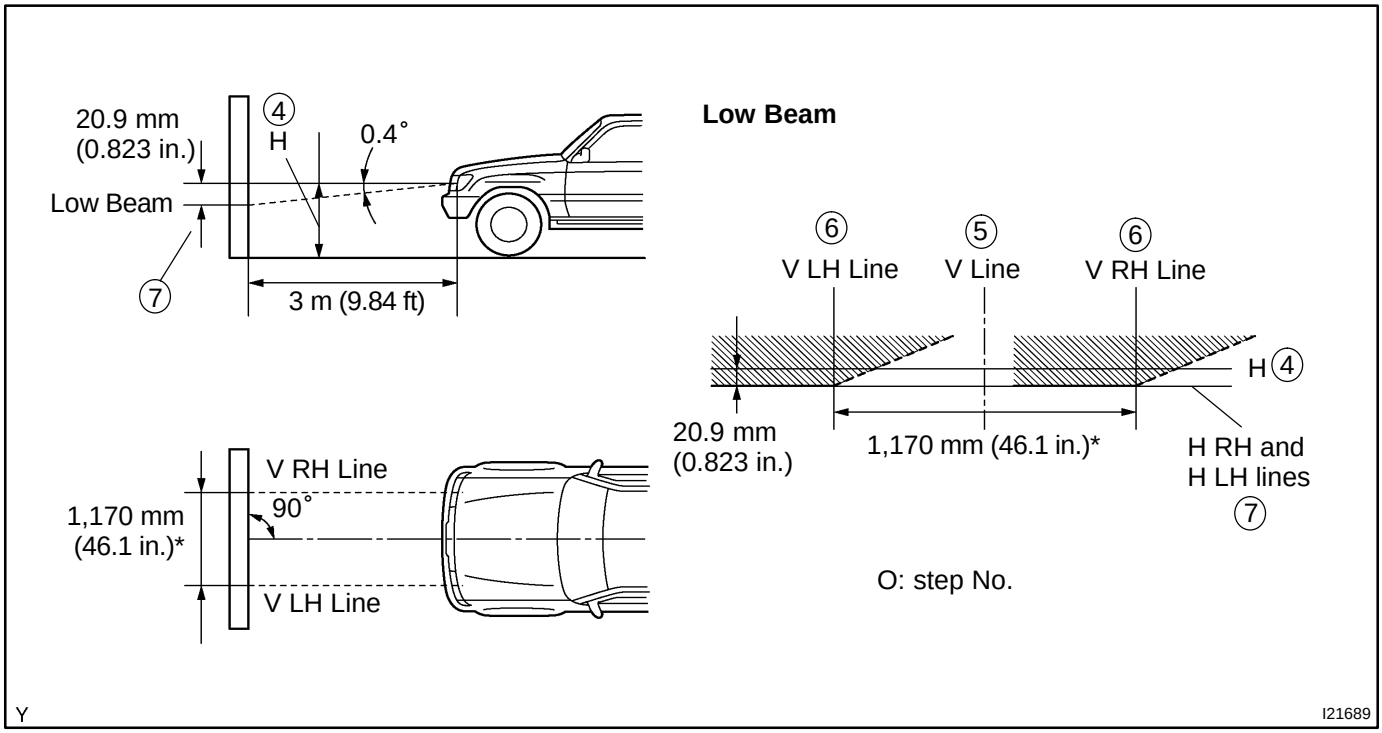

HINT:
- As shown in the illustration, adjust each aim of the RH and LH lights.
- Since the horizontal direction is impossible to adjust, the value * of the "Low Beam" aim is a reference value.

(c) When adjusting it in the vertical direction:
Using adjusting bolt, adjust the headlight aim to within the specified range.

BE03X–03

COMPONENTS

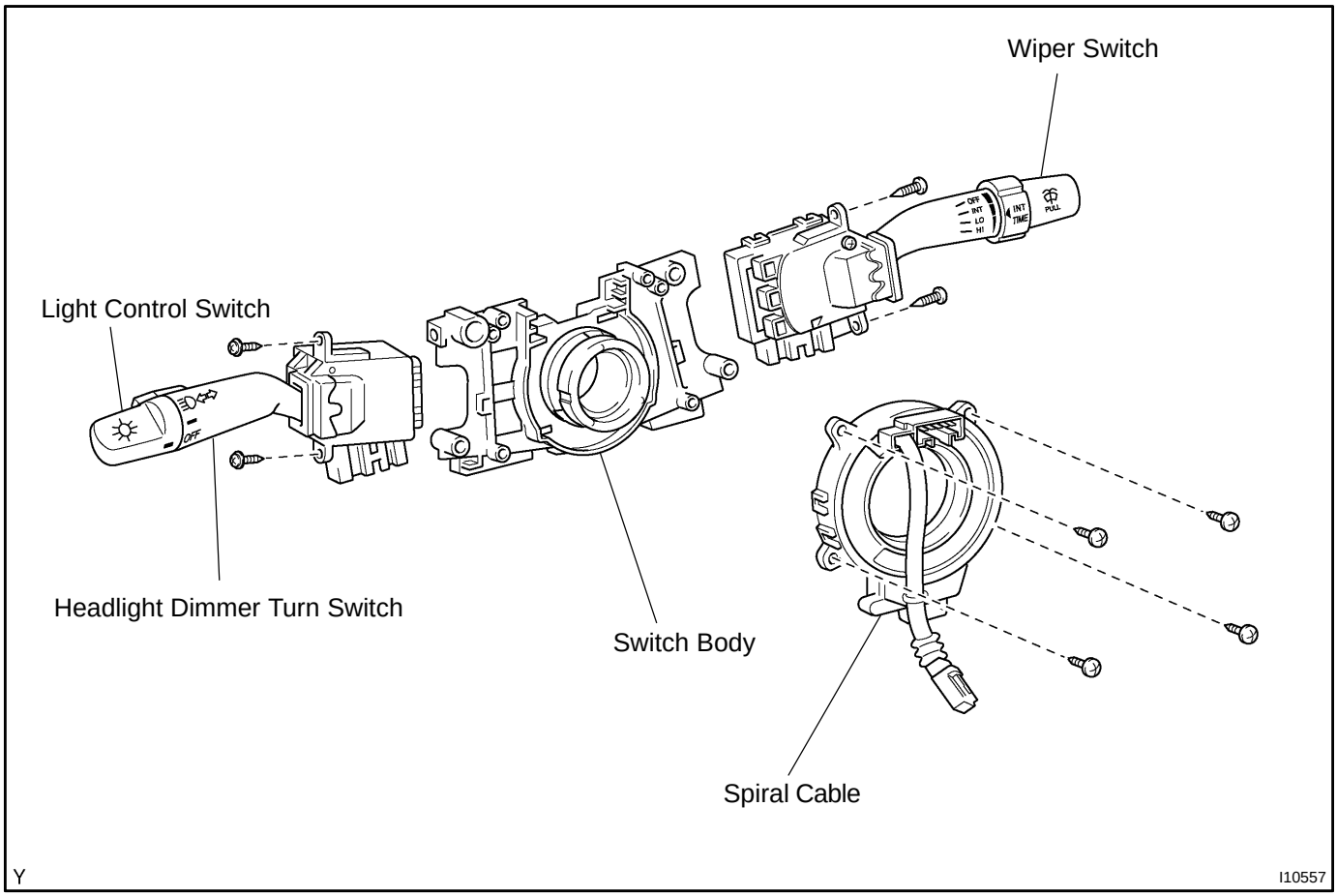

BE24C–01

INSPECTION

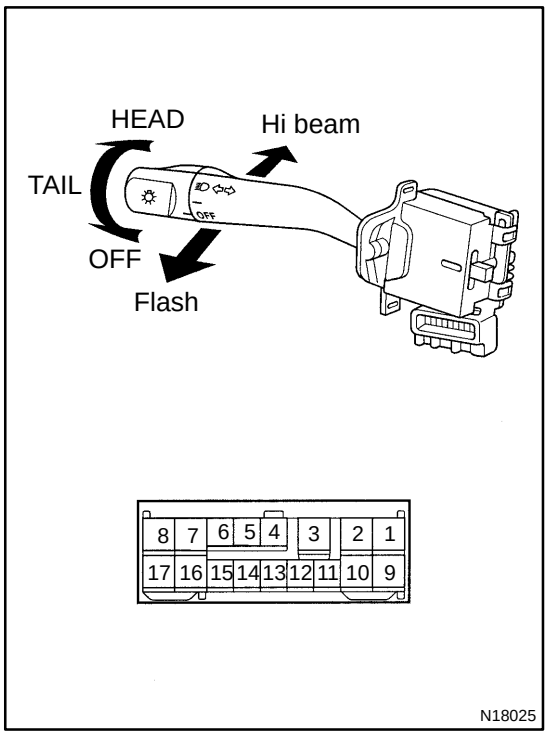

1. INSPECT LIGHT CONTROL SWITCH CONTINUITY

Switch position	Tester connection	Specified condition
OFF	–	No continuity
TAIL	14 – 16	Continuity
HEAD	13 – 14 – 16	Continuity

If continuity is not as specified, replace the switch.

2. INSPECT HEADLIGHT DIMMER SWITCH CONTINUITY

Switch position	Tester connection	Specified condition
Low beam	16 – 17	Continuity
High beam	7 – 16	Continuity
Flash	7 – 8 – 16	Continuity

If continuity is not as specified, replace the switch.

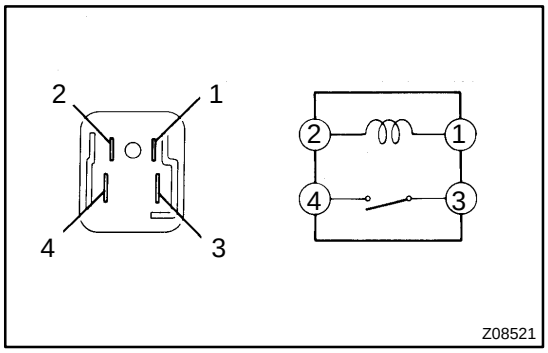

3. INSPECT HEADLIGHT CONTROL RELAY CONTINUITY

Condition	Tester connection	Specified condition
Constant	1 – 2	Continuity
Apply B+ between terminals 1 and 2.	3 – 4	Continuity

If continuity is not as specified, replace the relay.

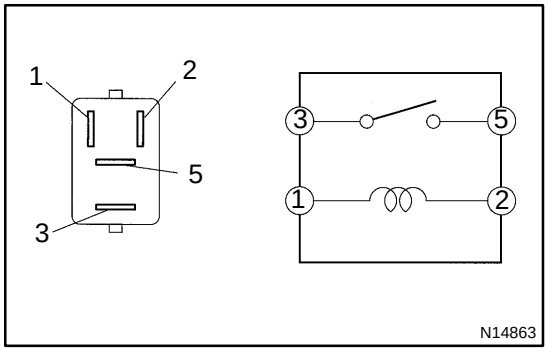

4. INSPECT TAILLIGHT CONTROL RELAY CONTINUITY

Condition	Tester connection	Specified condition
Constant	1 – 2	Continuity
Apply B+ between terminals 1 and 2.	3 – 5	Continuity

If continuity is not as specified, replace the relay.

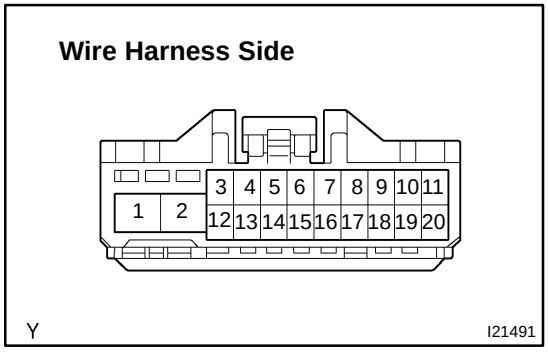

5. INSPECT DAYTIME RUNNING LIGHT RELAY CIRCUIT

Disconnect the connector from the relay and inspect the connector on the wire harness side.

Tester connection	Condition	Specified condition
1 – Ground	Headlight dimmer switch position Low beam and High beam	No continuity
1 – Ground	Headlight dimmer switch position Flash	Continuity
2 – Ground	Constant	Continuity
4 – Ground	Constant	Continuity
5 – Ground	Constant	Continuity
7 – Ground	Headlight dimmer switch position Low beam and High beam	No continuity
7 – Ground	Headlight dimmer switch position Flash	Continuity
8 – Ground	Headlight dimmer switch position Low beam	No continuity
8 – Ground	Headlight dimmer switch position High beam or Flash	Continuity
11 – Ground	Parking brake switch position OFF (Parking brake lever released)	No continuity
11– Ground	Paring brake switch position ON (Parking brake lever pulled up)	Continuity
10 – Ground	Brake fluid level warning position OFF	No continuity
10 – Ground	Brake fluid level warning position ON	Continuity
3 – Ground	Constant	Battery positive voltage
6 – Ground	Constant	Battery positive voltage
9 – Ground	Engine stop	No voltage
9 – Ground	Engine running	Battery positive voltage
12 – Ground	Ignition switch position LOCK or ACC	No voltage
12 – Ground	Ignition switch position ON or START	Battery positive voltage

If circuit is as specified, perform inspections.

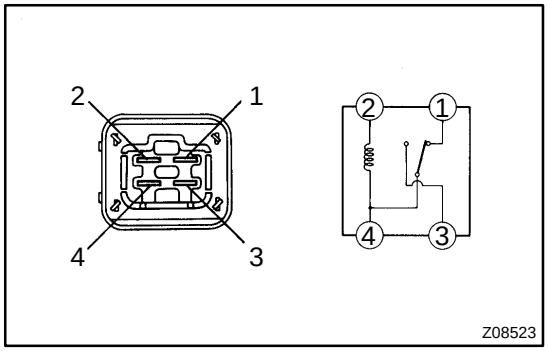

6. INSPECT HEADLIGHT DIMMER RELAY CONTINUITY

Condition	Tester connection	Specified condition
Constant	1 – 4, 2 – 4	Continuity
Apply B+ between terminals 2 and 4.	3 – 4	Continuity

If continuity is not as specified, replace the relay.

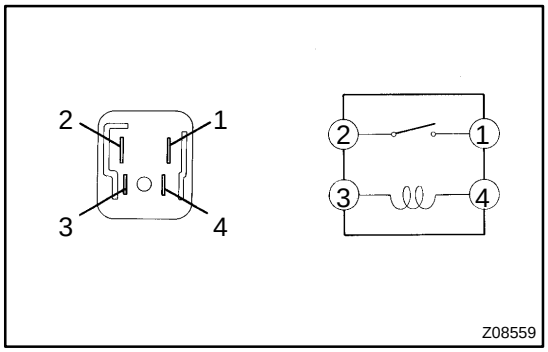

7. INSPECT DAYTIME RUNNING LIGHT NO.4 RELAY CONTINUITY

Condition	Tester connection	Specified condition
Constant	3 – 4	Continuity
Apply B+ between terminals 3 and 4.	1 – 2	Continuity

If continuity is not as specified, replace the relay.

HEADLIGHT AND TAILLIGHT SYSTEM

BE03W–02

LOCATION

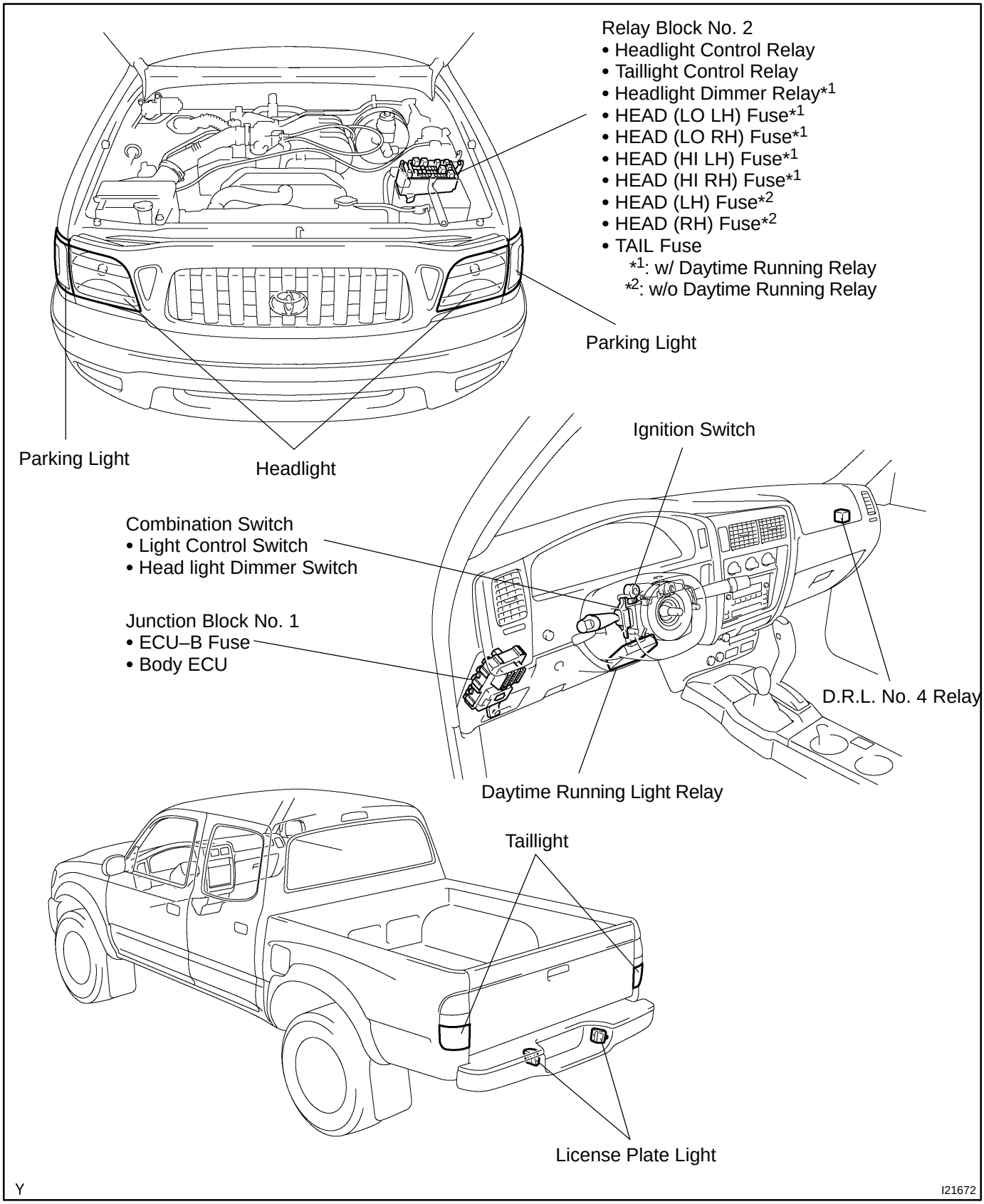

BE24R–01

INSPECTION

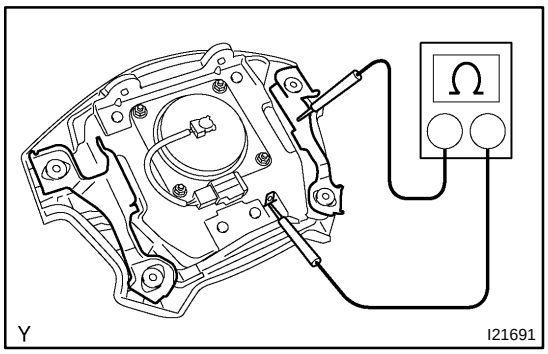

1. INSPECT HORN SWITCH

(a) Check that no continuity exists between the horn contact plate and body ground.

(b) Check that continuity exists between the horn contact plate and body ground when the horn contact plate is pressed against the steering spoke assembly.

If continuity is not as specified, repair or replace the steering wheel or wire harness as necessary.

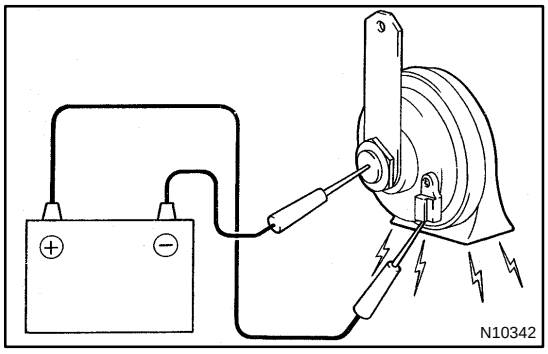

2. INSPECT HORN OPERATION

Connect the positive (+) lead from the battery to the terminal and negative (–) lead to the horn body and check that the horn blows.

If operation is not as specified, replace the horn.

HORN SYSTEM

LOCATION

BE24Q–01

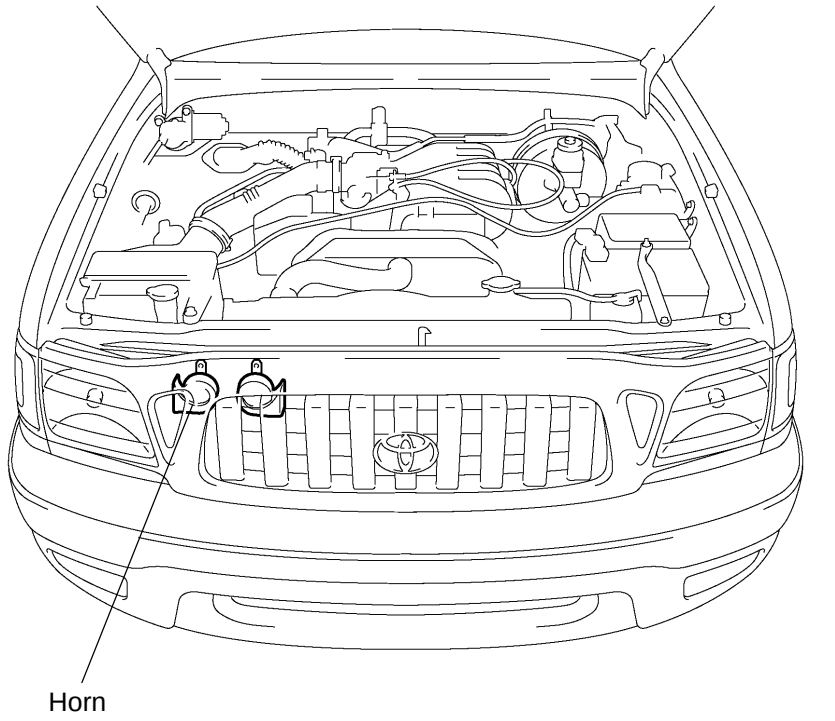

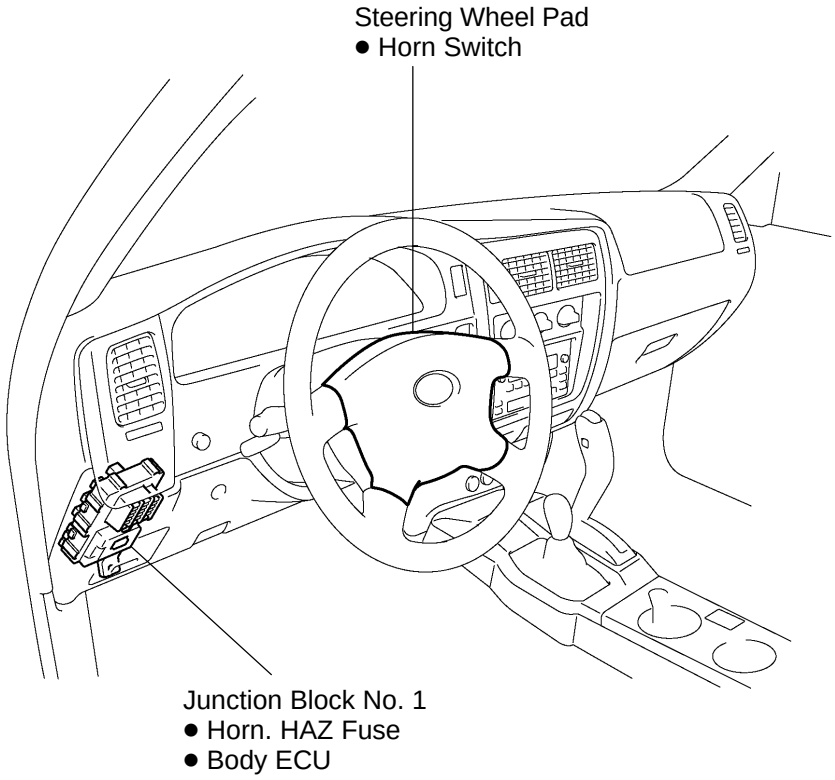

Y

I21667

BE24E–01

INSPECTION

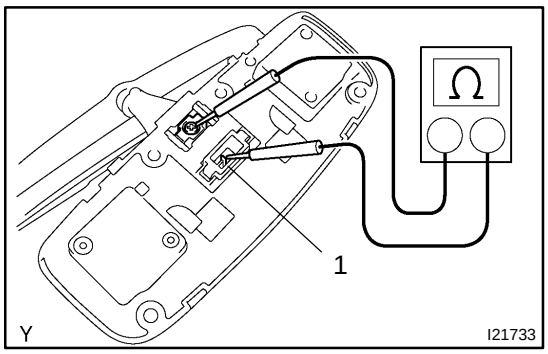

1. INSPECT PERSONAL LIGHT SWITCH CONTINUITY

(a) Disconnect the connector from personal light switch.

(b) Turn the personal light switch ON, check that continuity exists between terminal 1 and body ground.

If operation is not as specified, replace the switch.

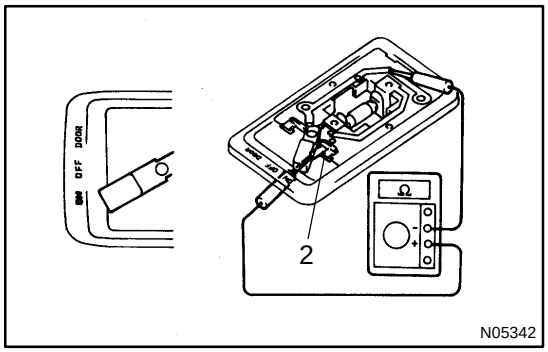

2. INSPECT ROOM LIGHT SWITCH CONTINUITY

(a) Disconnect the connector from room light switch.

(b) Turn the room light switch ON, check that continuity exists between terminal 2 and body ground.

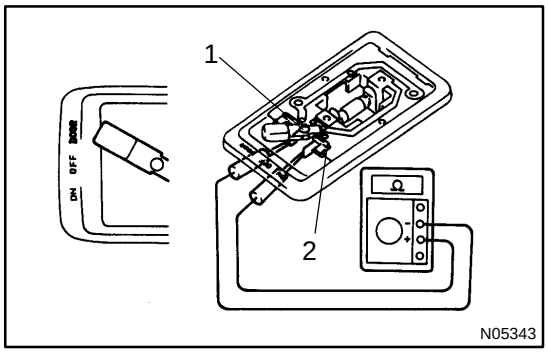

(c) Turn the room light switch to DOOR, check that there is continuity between terminals 1 and 2.

If operation is not as specified, replace the switch.

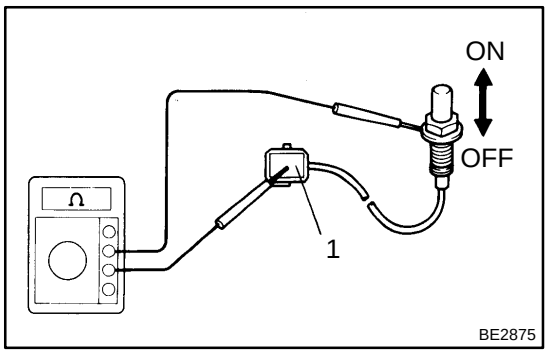

3. INSPECT DOOR COURTESY SWITCH CONTINUITY

(a) Check that continuity exists between terminal and the switch body in the ON position (switch pin released : opened door).

(b) Check that no continuity exists between terminal and the switch body in the OFF position (switch pin pushed in : closed door).

If operation is not as specified, replace the switch.

INTERIOR LIGHT SYSTEM

LOCATION

BE042–02

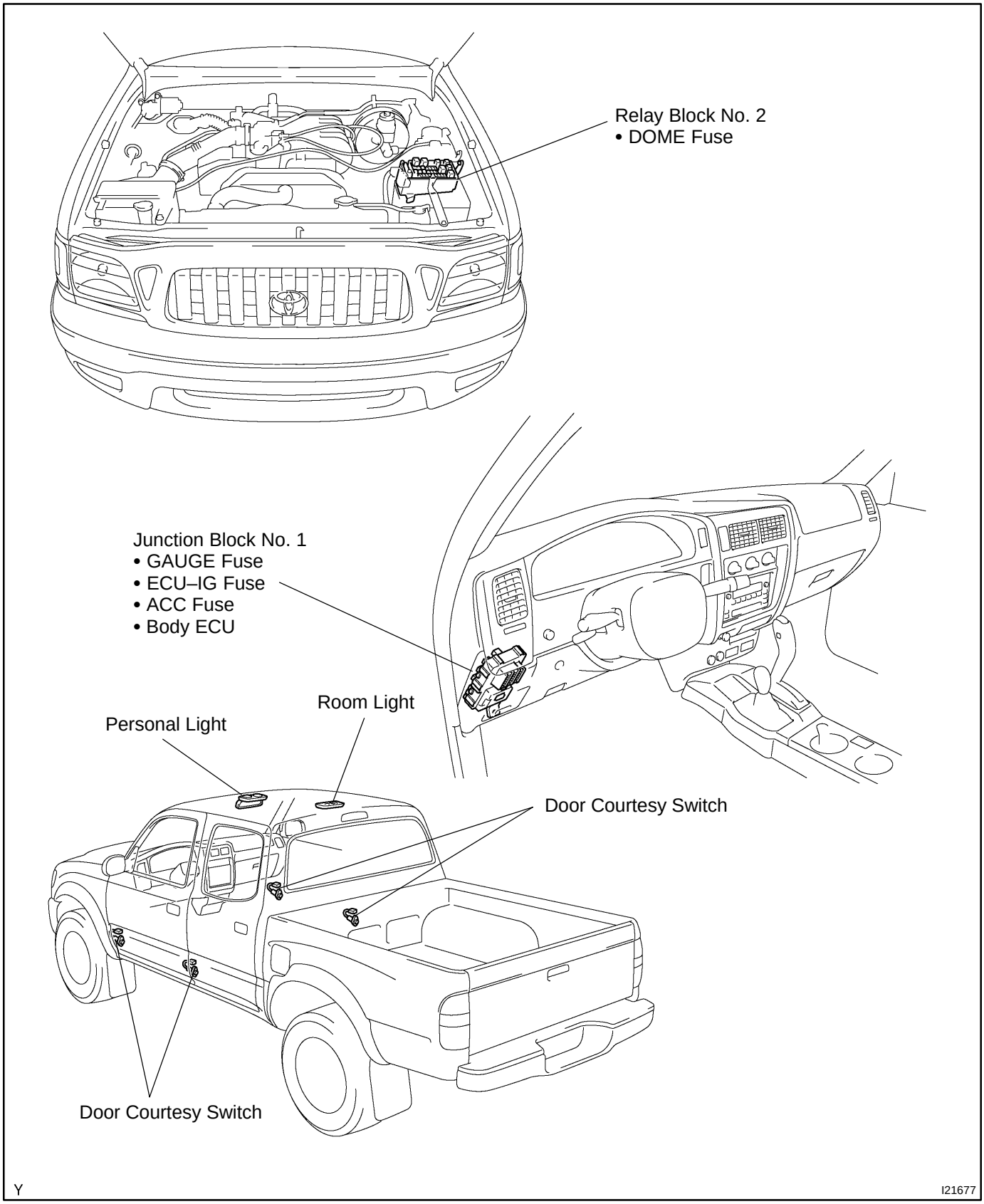

BE24B–01

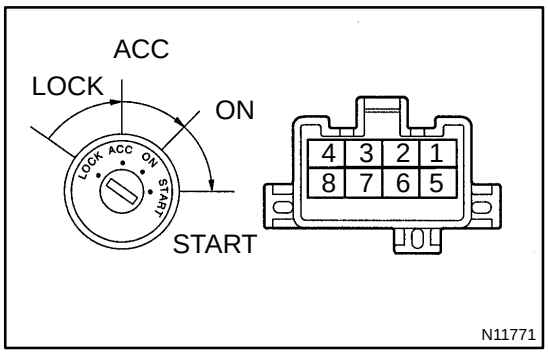

INSPECTION

1. INSPECT IGNITION SWITCH CONTINUITY

Switch position	Tester connection	Specified condition
LOCK	–	No continuity
ACC	2 – 3	Continuity
ON	2 – 3 – 4 6 – 7	Continuity
START	1 – 2 – 4 6 – 7 – 8	Continuity

If continuity is not as specified, replace the switch.

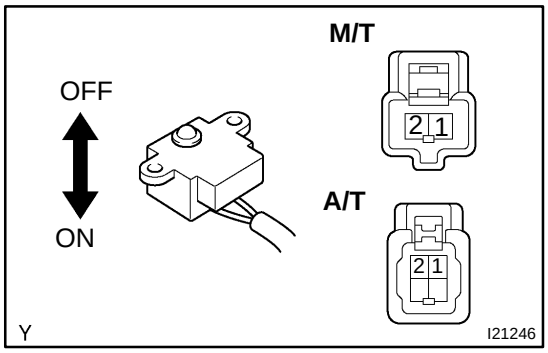

2. INSPECT KEY UNLOCK WARNING SWITCH CONTINUITY

Condition	Tester connection	Specified condition
Switch OFF (Key removed)	–	No continuity
Switch ON (Key set)	1 – 2	Continuity

If continuity is not as specified, replace the switch.

IGNITION SWITCH AND KEY UNLOCK WARNING SWITCH

BE03U–02

LOCATION

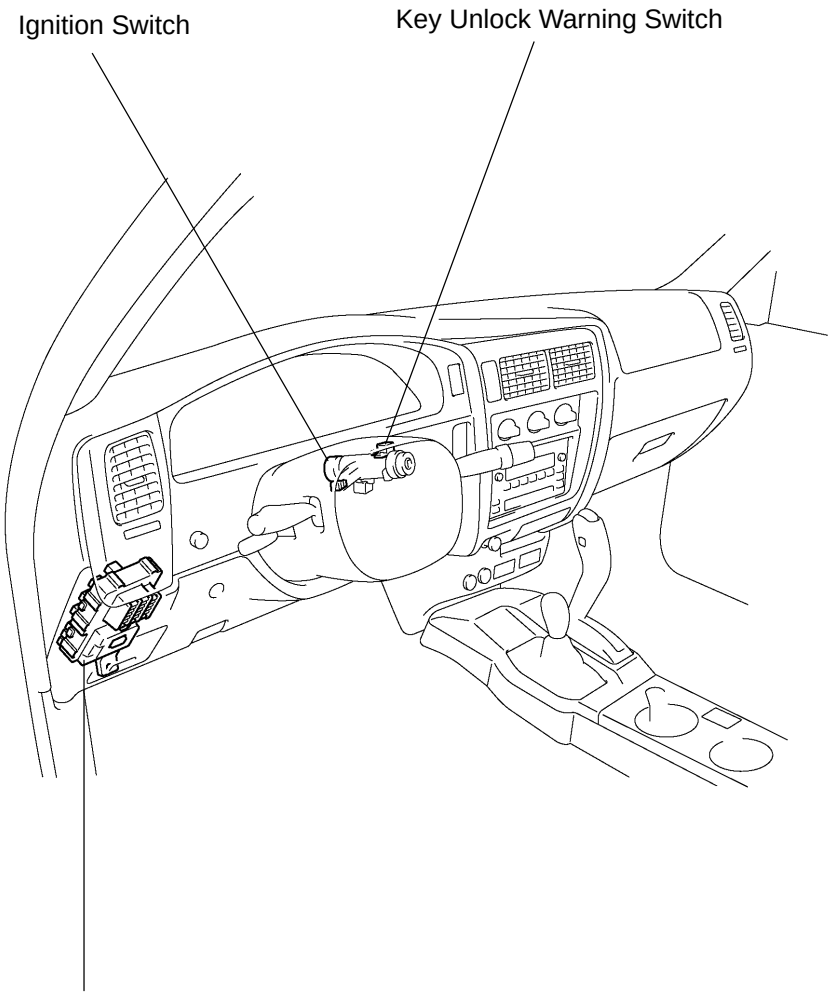

Y

I21666

BE24K–01

INSPECTION

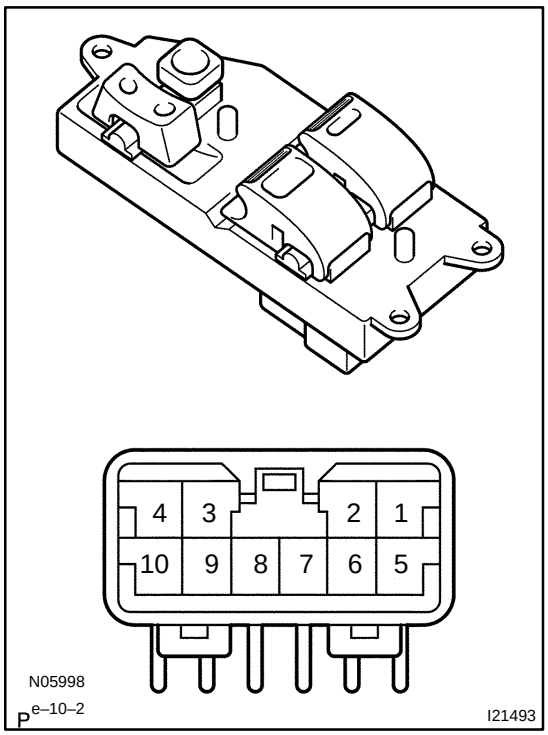

1. Master switch (2 door):
INSPECT DRIVER'S DOOR LOCK CONTROL SWITCH CONTINUITY

Switch position	Tester connection	Specified condition
LOCK	1 – 2	Continuity
OFF	1 – 2 – 5	No continuity
UNLOCK	1 – 5	Continuity

If continuity is not as specified, replace the switch.

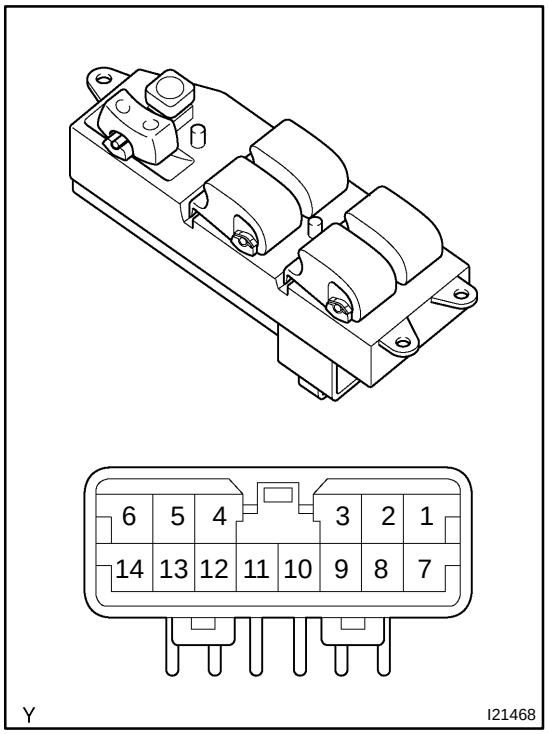

2. Master switch (4 door):
INSPECT DRIVER'S DOOR LOCK CONTROL SWITCH CONTINUITY

Switch position	Tester connection	Specified condition
LOCK	2 – 3	Continuity
OFF	2 – 3 – 7	No continuity
UNLOCK	3 – 7	Continuity

If continuity is not as specified, replace the switch.

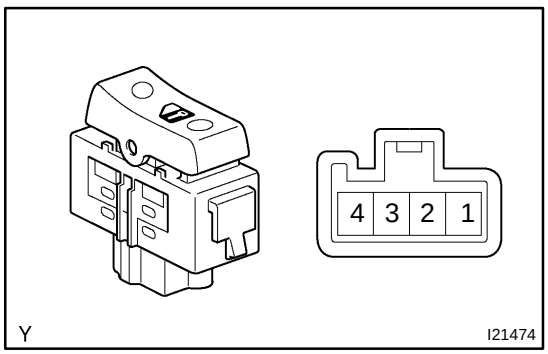

3. INSPECT FRONT PASSENGER'S DOOR LOCK CONTROL SWITCH CONTINUITY

Switch position	Tester connection	Specified condition
LOCK	3 – 4	Continuity
OFF	2 – 3 – 4	No continuity
UNLOCK	2 – 4	Continuity

If continuity is not as specified, replace the switch.

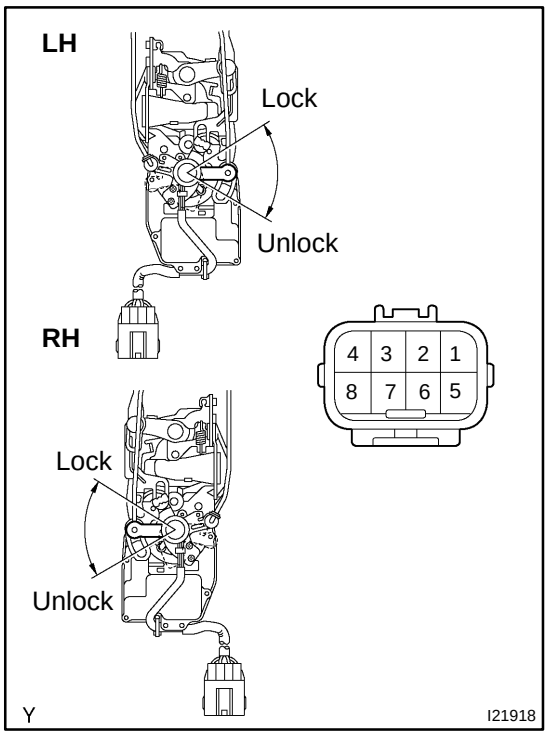

4. INSPECT DOOR KEY LOCK AND UNLOCK SWITCH CONTINUITY

LH:

Switch position	Tester connection to terminal number	Specified condition
LOCK	5 – 6	Continuity
OFF	1 – 5 – 6	No continuity
UNLOCK	1 – 5	Continuity

If continuity is not as specified, replace the switch.

RH:

Switch position	Tester connection to terminal number	Specified condition
LOCK	7 – 8	Continuity
OFF	4 – 7 – 8	No continuity
UNLOCK	4 – 8	Continuity

If continuity is not as specified, replace the switch.

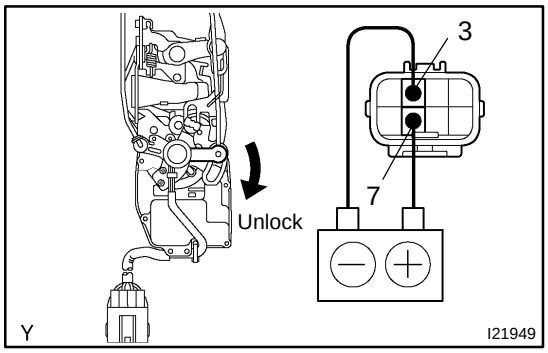

5. INSPECT DRIVER'S DOOR LOCK MOTOR OPERATION

(a) Connect the positive (+) lead from the battery to terminal 7 and the negative (–) lead to terminal 3, and check that the door lock link moves to UNLOCK position.

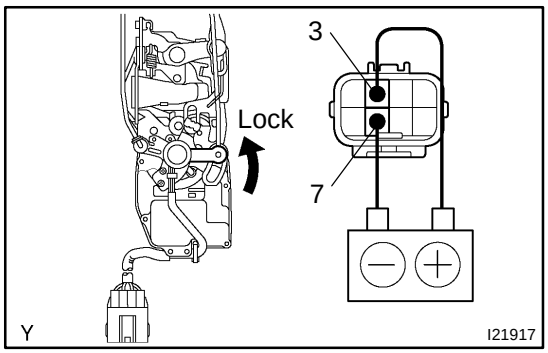

(b) Reverse the polarity and check that the door lock link moves to LOCK position.

If operation is not as specified, replace the door lock assembly.

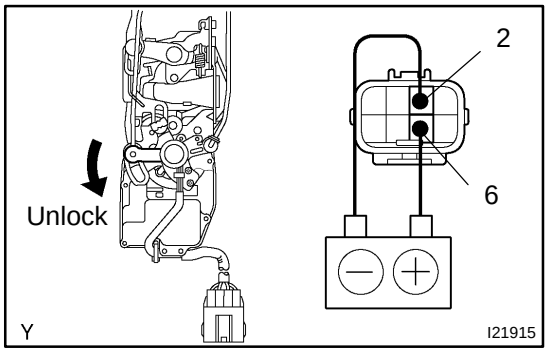

6. INSPECT FRONT PASSENGER'S DOOR LOCK MOTOR OPERATION

(a) Connect the positive (+) lead from the battery to terminal 6 and the negative (–) lead to terminal 2, and check that the door lock moves to UNLOCK position.

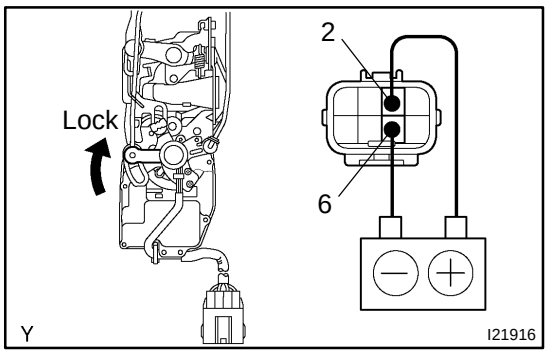

(b) Reverse the polarity and check that the door lock link moves to LOCK position.

If operation is not as specified, replace the door lock assembly.

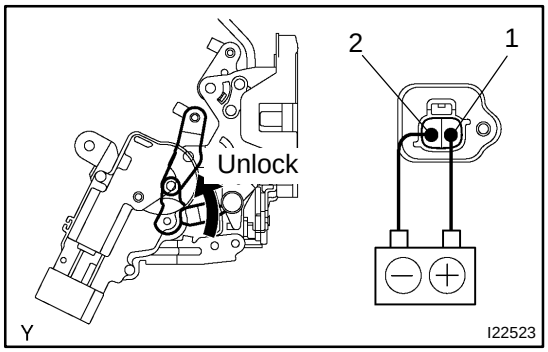

7. INSPECT REAR LH DOOR LOCK MOTOR OPERATION

(a) Connect the positive (+) lead from the battery to terminal 1 and the negative (–) lead to terminal 2, and check that the door lock moves to UNLOCK position.

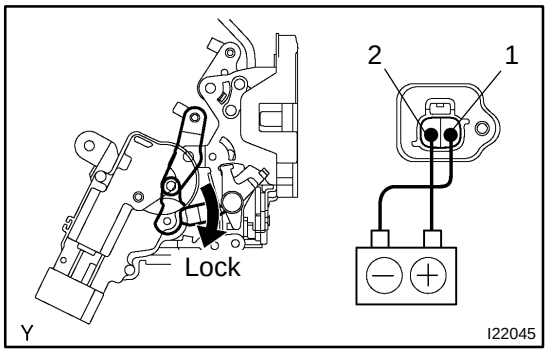

(b) Reverse the polarity and check that the door lock link moves to LOCK position.

If operation is not as specified, replace the door lock assembly.

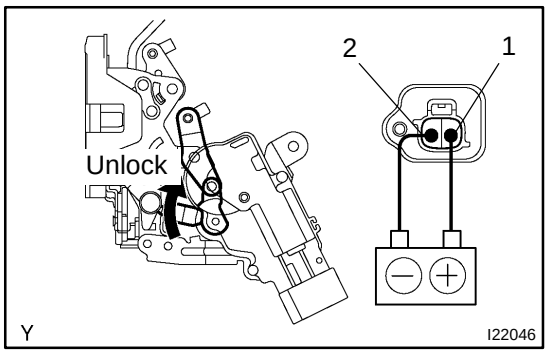

8. INSPECT REAR RH DOOR LOCK MOTOR OPERATION

(a) Connect the positive (+) lead from the battery to terminal 1 and the negative (–) lead to terminal 2, and check that the door lock moves to UNLOCK position.

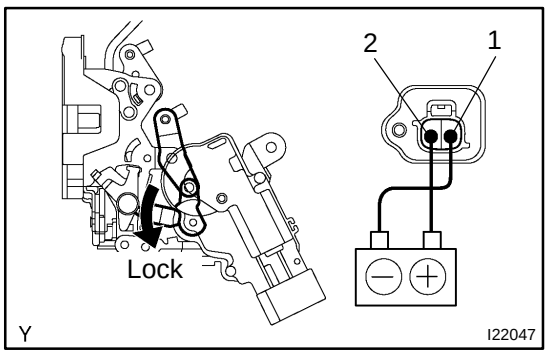

(b) Reverse the polarity and check that the door lock link moves to LOCK position.

If operation is not as specified, replace the door lock assembly.

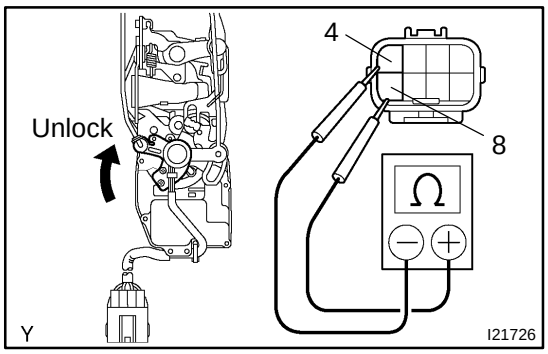

9. INSPECT DRIVER'S DOOR UNLOCK DETECTION SWITCH CONTINUITY

Switch position	Tester connection	Specified condition
OFF (Door Lock set to LOCK)	–	No continuity
ON (Door Lock set to UNLOCK)	4 – 8	Continuity

If continuity is not as specified, replace the switch.

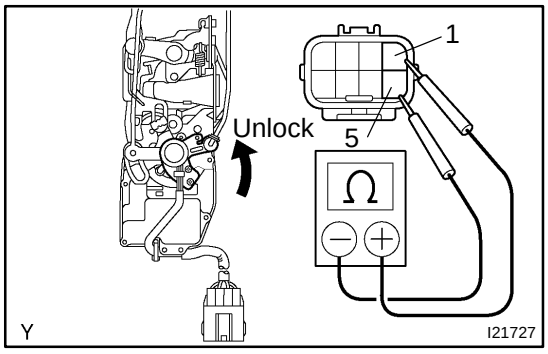

10. INSPECT FRONT PASSENGER'S DOOR UNLOCK DETECTION SWITCH CONTINUITY

Switch position	Tester connection	Specified condition
OFF (Door Lock set to LOCK)	–	No continuity
ON (Door Lock set to UNLOCK)	1 – 5	Continuity

If continuity is not as specified, replace the switch.

POWER DOOR LOCK CONTROL SYSTEM

LOCATION

BE04F–04

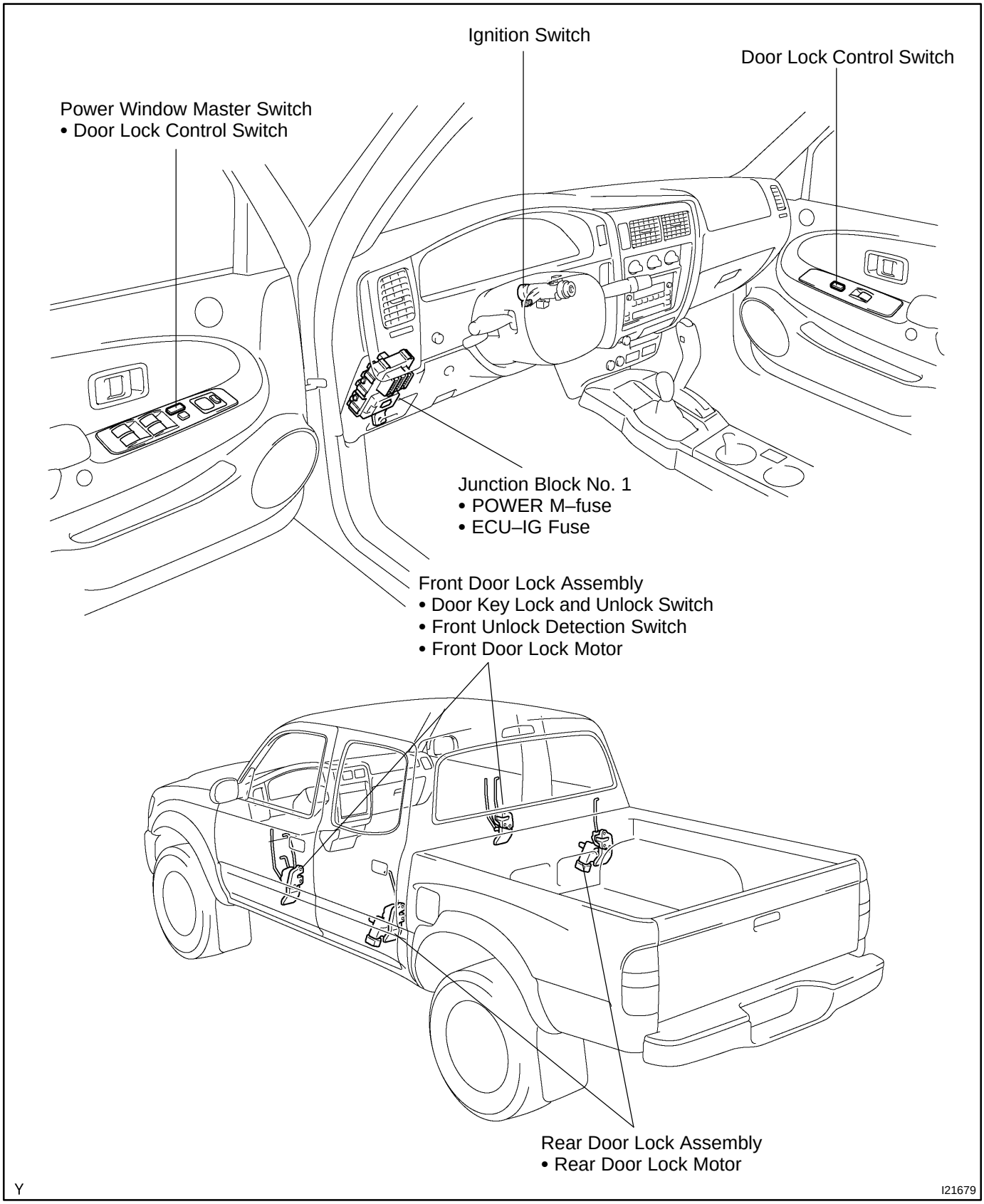

BE04I–03

INSPECTION

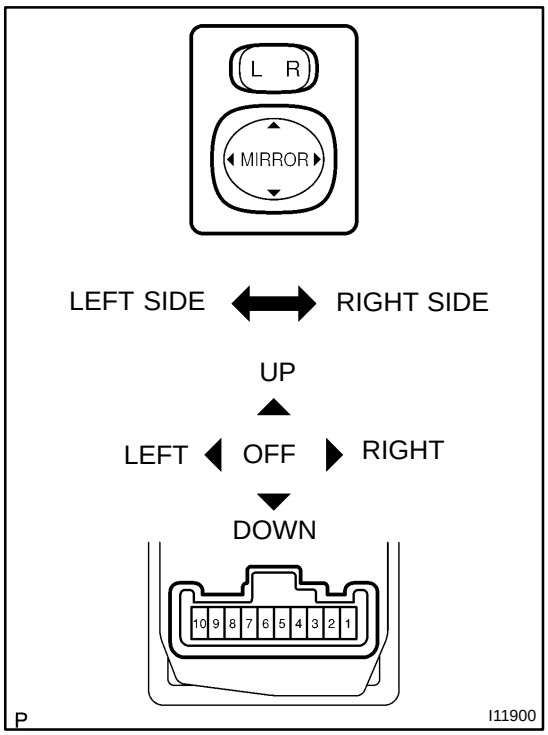

1. Left side:

INSPECT MIRROR SWITCH INSPECTION

Switch position	Tester connection	Specified condition
OFF	–	No continuity
UP	4 – 8, 6 – 7	Continuity
DOWN	4 – 7, 6 – 8	Continuity
LEFT	5 – 8, 6 – 7	Continuity
RIGHT	5 – 7, 6 – 8	Continuity

2. Right side:

INSPECTION MIRROR SWITCH INSPECTION

Switch position	Tester connection	Specified condition
OFF	–	No continuity
UP	3 – 8, 6 – 7	Continuity
DOWN	3 – 7, 6 – 8	Continuity
LEFT	2 – 8, 6 – 7	Continuity
RIGHT	2 – 7, 6 – 8	Continuity

If continuity is not as specified, replace the switch.

3. INSPECT MIRROR MOTOR OPERATION

(a) Connect the positive (+) lead from the battery to terminal 3 and negative (–) lead to terminal 1. Check that the mirror turns to left side.

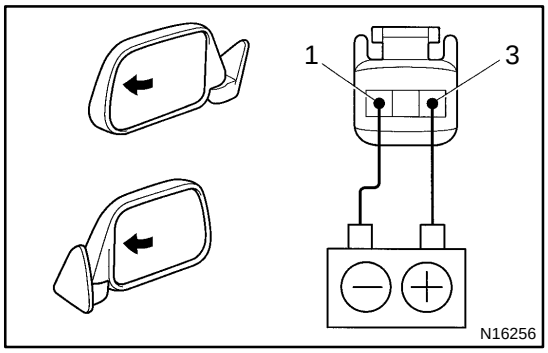

(b) Reverse the polarity and check that the mirror turns to right side.

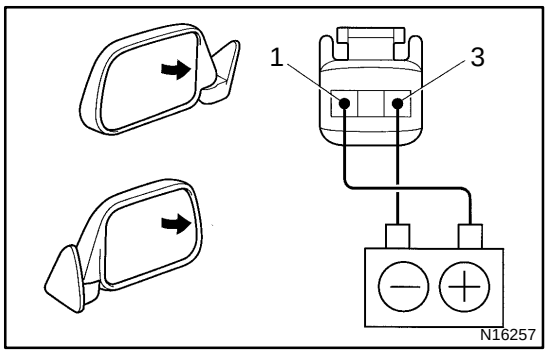

(c) Connect the positive (+) lead from the battery to terminal 2 and the negative (–) lead to terminal 1. Check that the mirror turns upward.

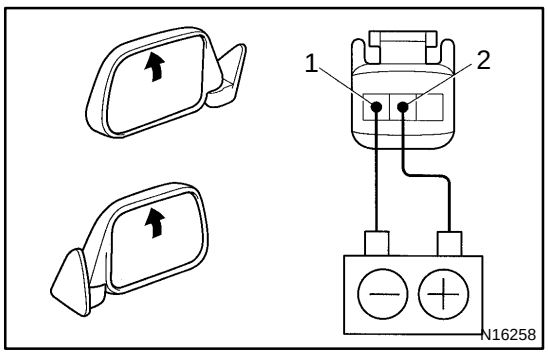

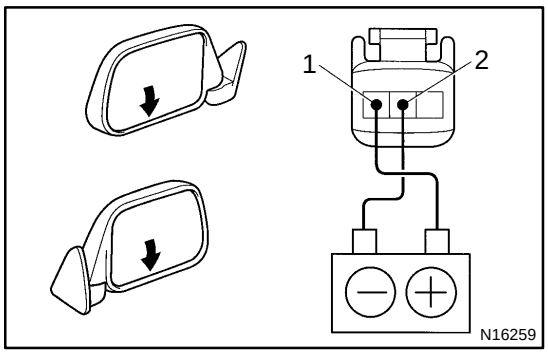

(d) Reverse the polarity, check that the mirror turns downward.

If operation is not as specified, replace the mirror assembly.

POWER MIRROR CONTROL SYSTEM

BE04H–02

LOCATION

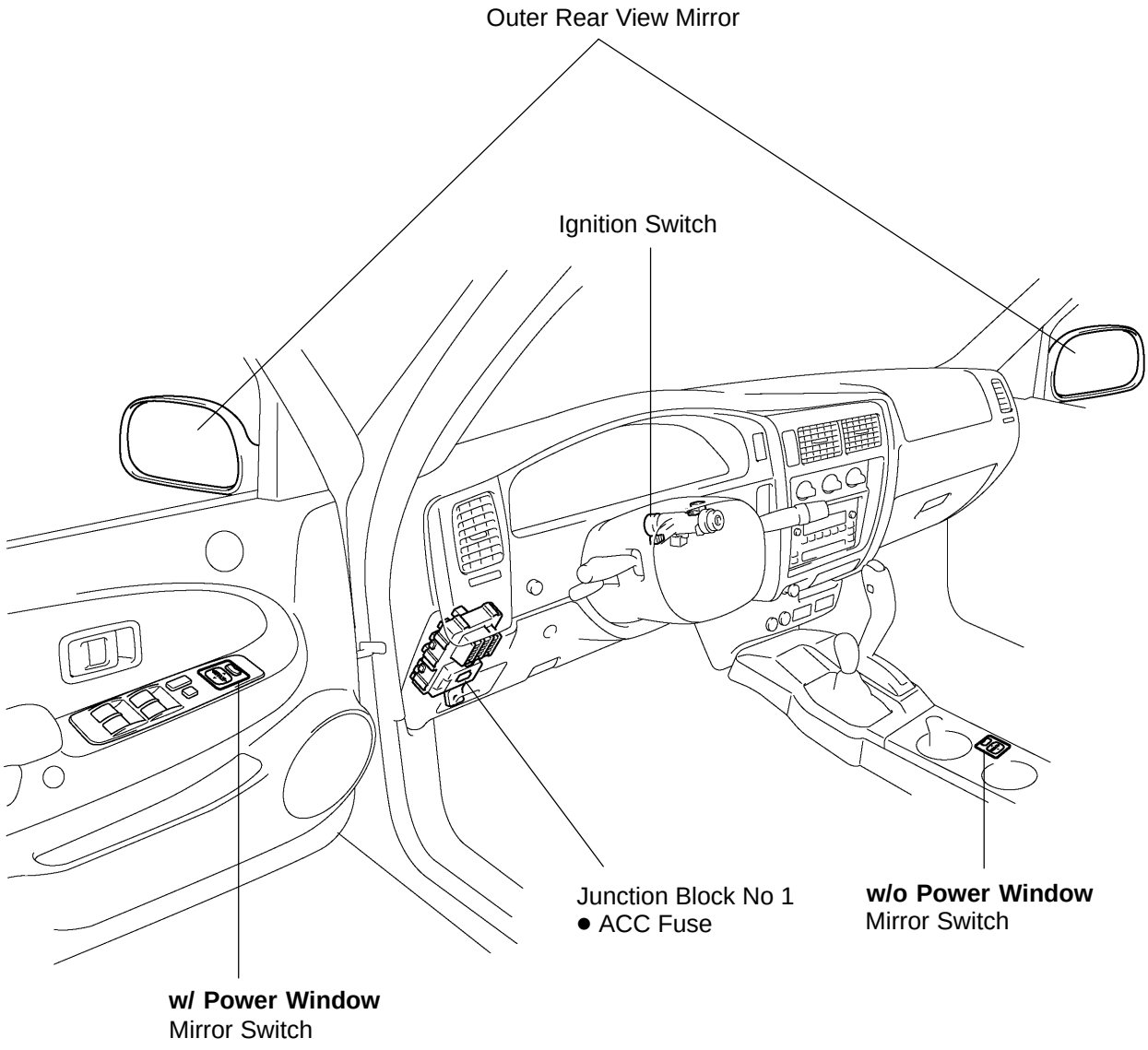

Y

I21671

POWER SOURCE

LOCATION

BE24A–02

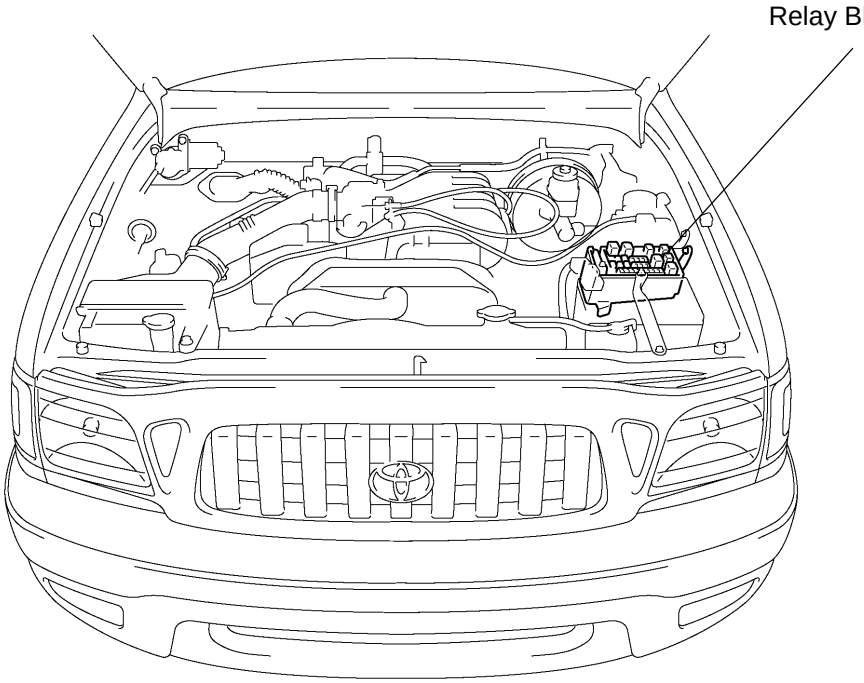

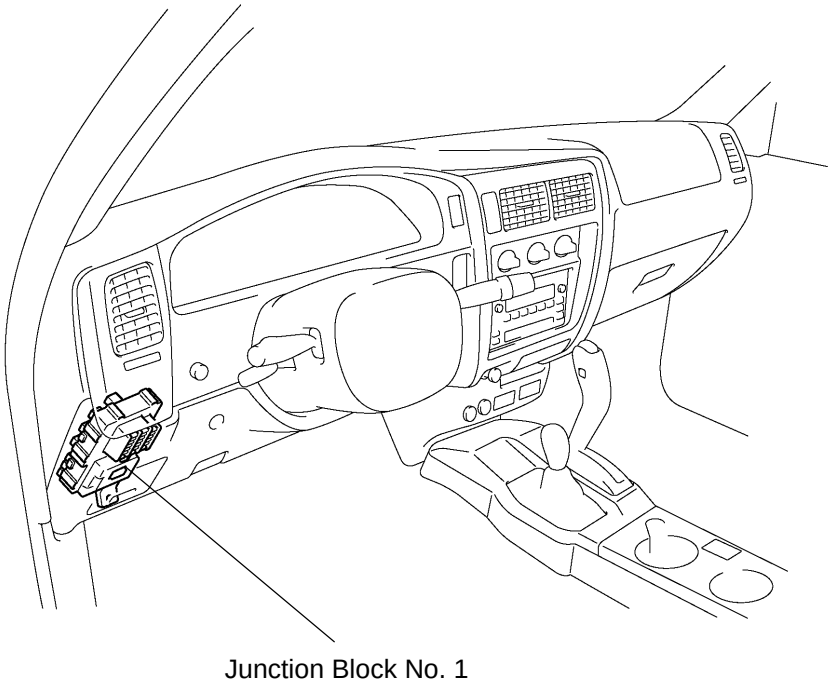

Y

I21665

Relay Block No. 2

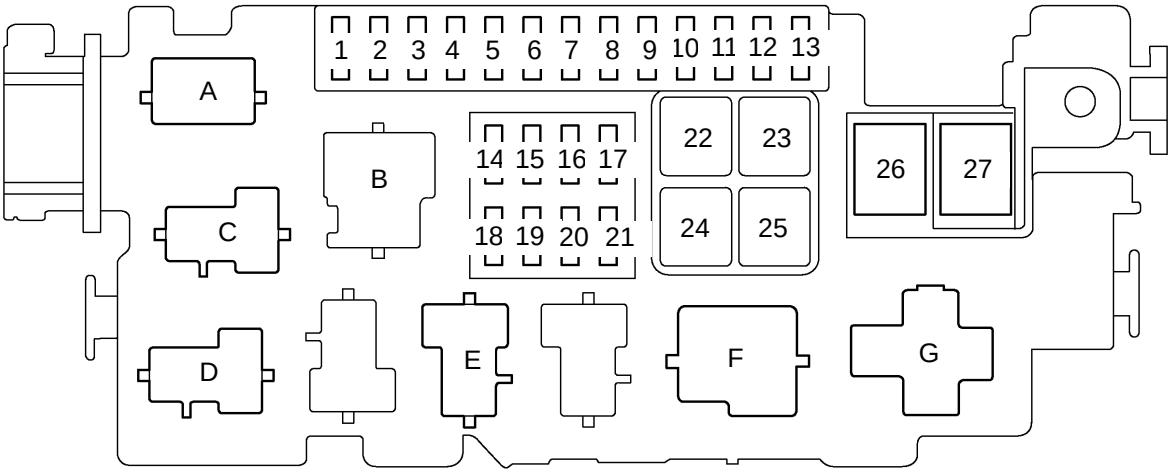

Fuses

1. –	
2. –	
3. –	
4. –	
5. –	
6. A.C	10 A
7. –	
8. TAIL	10 A
9. HEAD (LO LH)	10 A
10. HEAD (LO RH)	10 A
11. HEAD (HI LH) (w/ Daytime Running Light) HEAD (LH) (w/o Daytime Running lLght)	10 A
12. HEAD (HI RH) (w/ Daytime Running Light) HEAD (RH) (w/o Daytime Running Light)	10 A
13. DRL	7.5 A
14. EFI	20 A
15. OBD	7.5 A
16. DOME	15 A
17. –	
18. –	
19. –	
20. POWER OUTLET	15 A
21. ALT–S	7.5 A
22. AM2	30 A
23. J/B	50 A
24. AM1	40 A
25. HEATER	50 A
26. ALT	120 A
27. ABS	60 A

Relays

A. DIMMER Relay
B. HEAD Relay
C. EFI Relay
D. PWR OUTLET Relay
E. TAIL Relay
F. HEATER Relay
G. STARTER Relay

Y

I21737

Junction Block No. 1

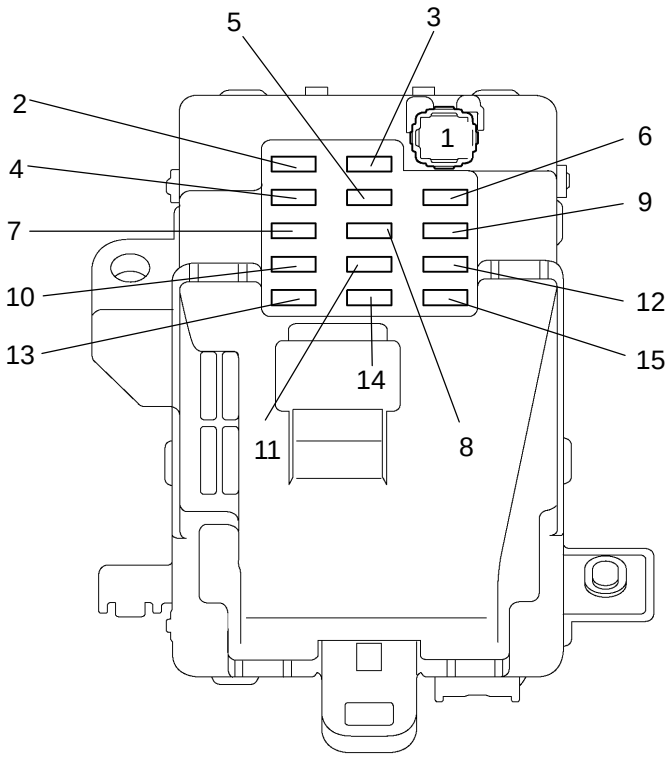

Fuses

1. POWER M–fuse	30 A
2. –	
3. ACC	15 A
4. ECU–IG	15 A
5. GAUGE	10 A
6. ECU–B	7.5 A
7. TURN	10 A
8. IGN	7.5 A
9. HORN–HAZ	15 A
10. WIP	20 A
11. –	
12. STA	7.5 A
13. 4WD	20 A
14. –	
15. STOP	10 A

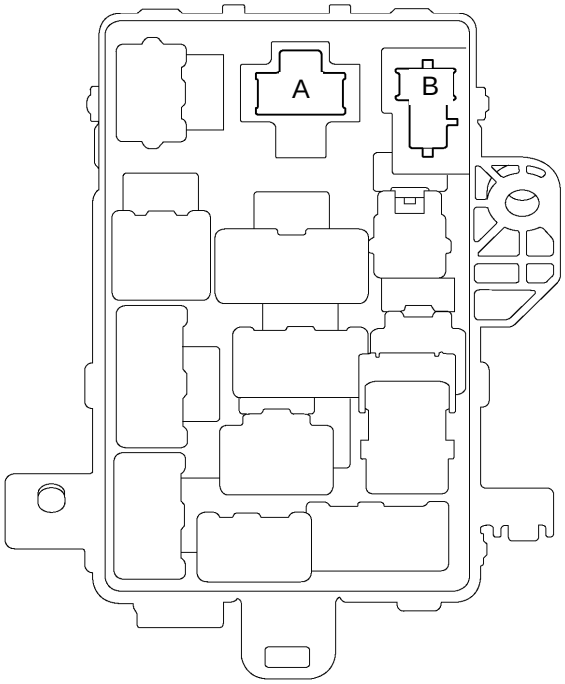

Relays

A. Flasher Relay
B. POWER Relay

Y

I21738

BE24N–01

INSPECTION

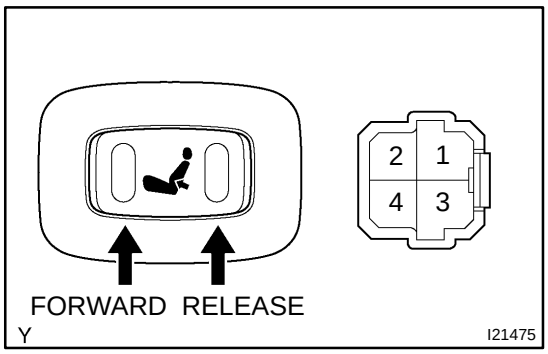

1. INSPECT LUMBAR SUPPORT SWITCH CONTINUITY

Switch position	Tester connection	Specified condition
FORWARD	1 – 4, 2 – 3	Continuity
OFF	1 – 2 – 4	Continuity
RELEASE	1 – 2, 3 – 4	Continuity

If continuity is not as specified, replace the switch.

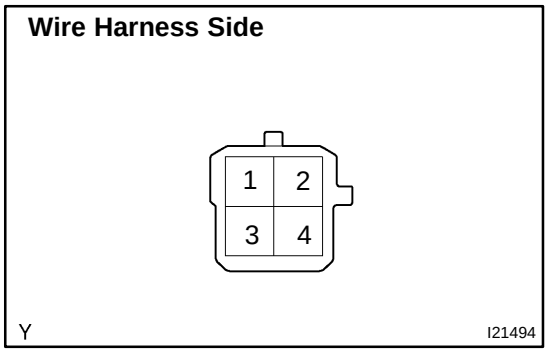

2. INSPECT LUMBAR SUPPORT SWITCH CIRCUIT

(a) Disconnect the switch connector and connect the seat wire harness to the floor wire harness.

(b) Inspect the connector on the wire harness side.

Tester connection	Condition	Specified condition
1 – Ground	Constant	Battery positive voltage
2 – Ground	Constant	Continuity

If circuit is not as specified, inspect the circuits connected to other parts.

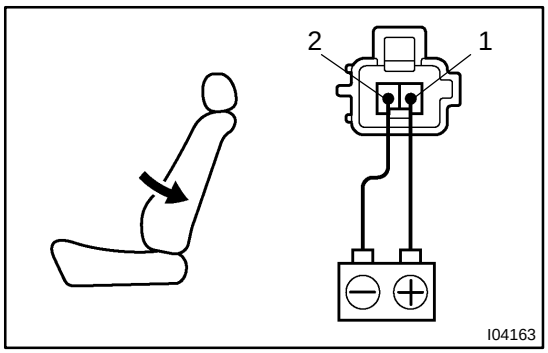

3. INSPECT LUMBAR SUPPORT MOTOR OPERATION

(a) Connect the positive (+) lead from the battery to terminal 1 and the negative (–) lead to terminal 2, check that the lumbar support moves to release side.

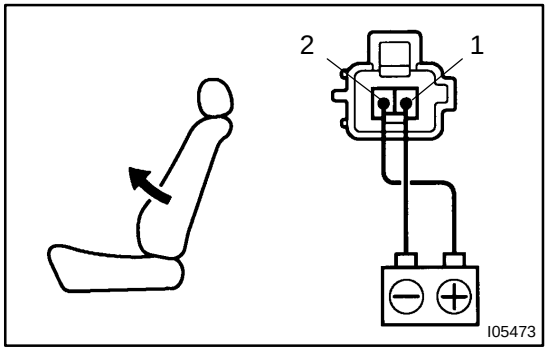

(b) Reverse the polarity, check that the lumbar support moves forward.

If operation is not as specified, replace the lumber support adjuster.

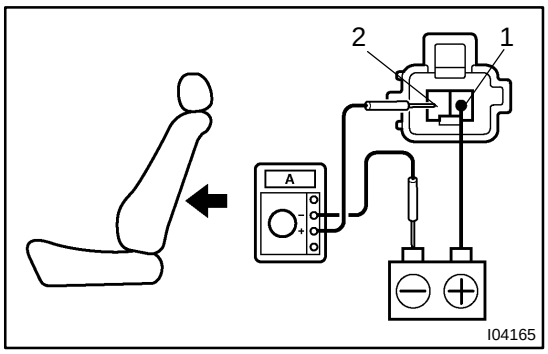

4. INSPECT LUMBAR SUPPORT MOTOR CIRCUIT BREAKER OPERATION

(a) Connect the positive (+) lead from the battery to terminal 2 and the negative (–) lead to terminal 1 on the lumbar support motor connector and move the lumbar support to front end position.

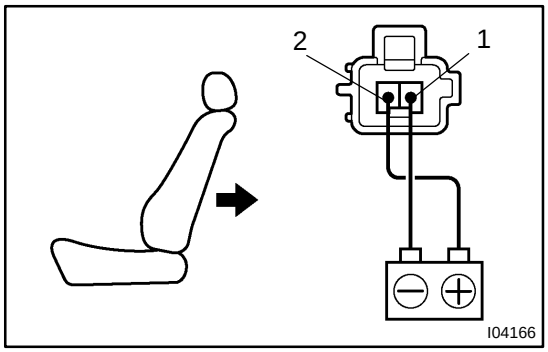

(b) Continue to apply voltage, check that a circuit breaker operation noise can be heard within 4 to 60 seconds.

(c) Reverse the polarity, check that the lumbar support begins to move release side with in approximately 60 seconds.

If operation is not as specified, replace the lumber support adjuster.

POWER SEAT CONTROL SYSTEM

BE24M–01

LOCATION

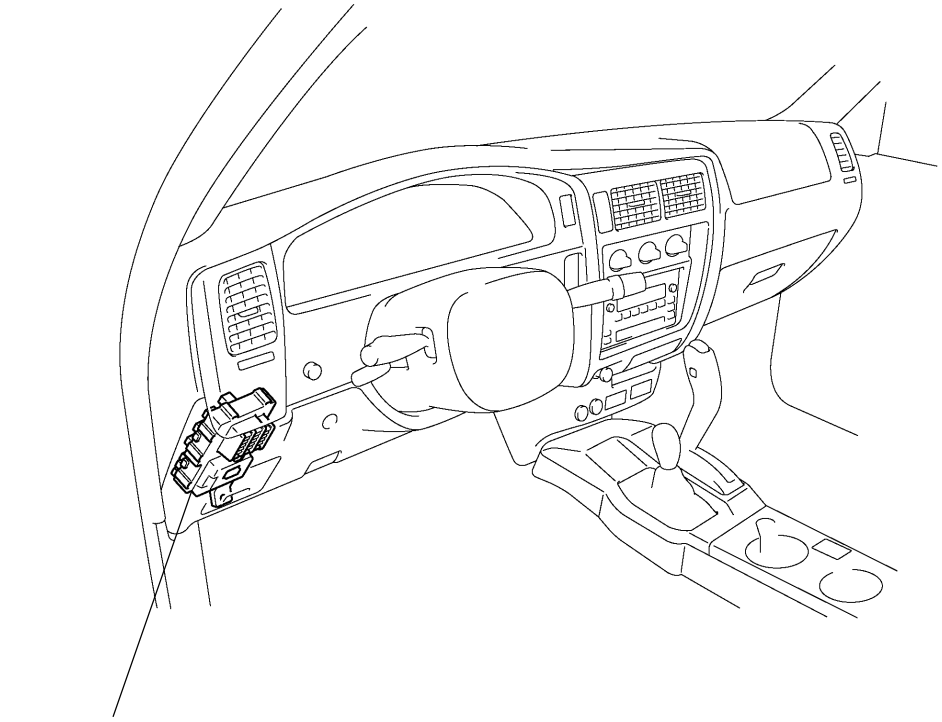

Junction Block No. 1
- POWER M–fuse

Driver's Seat

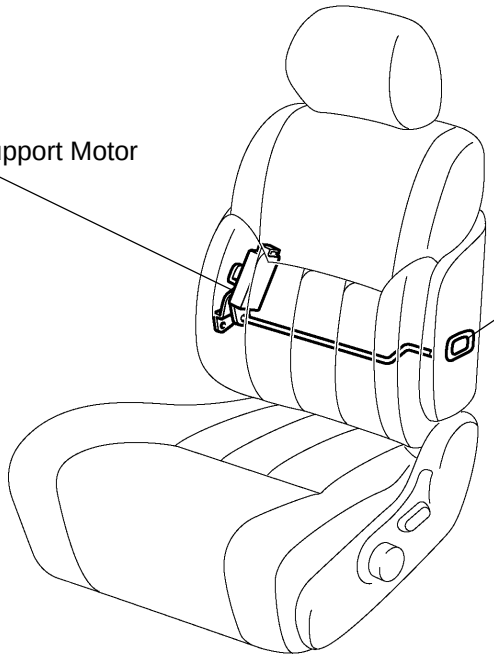

Lumbar Support Motor

Lumbar Support Switch
(Power Seat Switch)

Y

I21668

BE04E–02

INSPECTION

1. 2 Door:

INSPECT POWER WINDOW MASTER SWITCH CONTINUITY

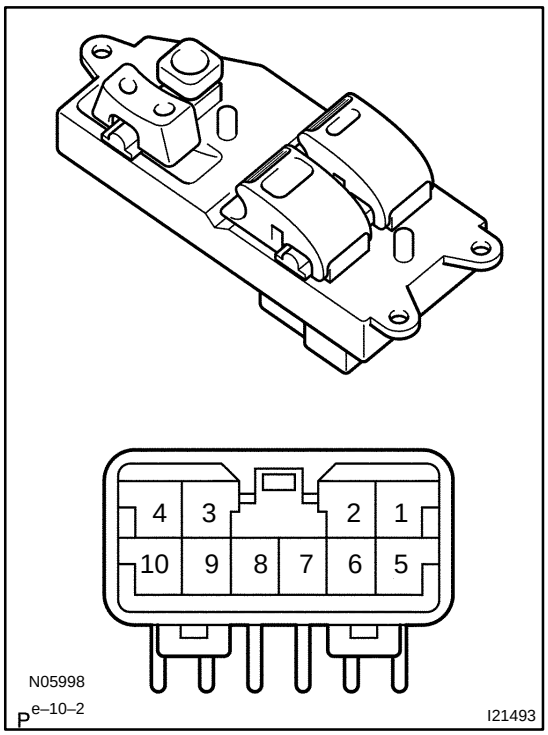

Driver's switch:

Switch position	Tester connection	Specified condition
UP	1 – 4, 3 – 9	Continuity
OFF	1 – 3 – 4	Continuity
DOWN	1– 3, 4 – 9	Continuity
DOWN AUTO	1– 3, 4 – 9	Continuity

Passenger's switch (Window unlock):

Switch position	Tester connection	Specified condition
UP	1 – 10, 8 – 9	Continuity
OFF	1 – 8 – 10	Continuity
DOWN	1 – 8, 9 – 10	Continuity

Passenger's switch: Window lock

Switch position	Tester connection	Specified condition
UP	8 – 9	Continuity
OFF	8 – 10	Continuity
DOWN	9 – 10	Continuity

If continuity is not as specified, replace the switch.

2. 4 Door:

INSPECT POWER WINDOW MASTER SWITCH CONTINUITY

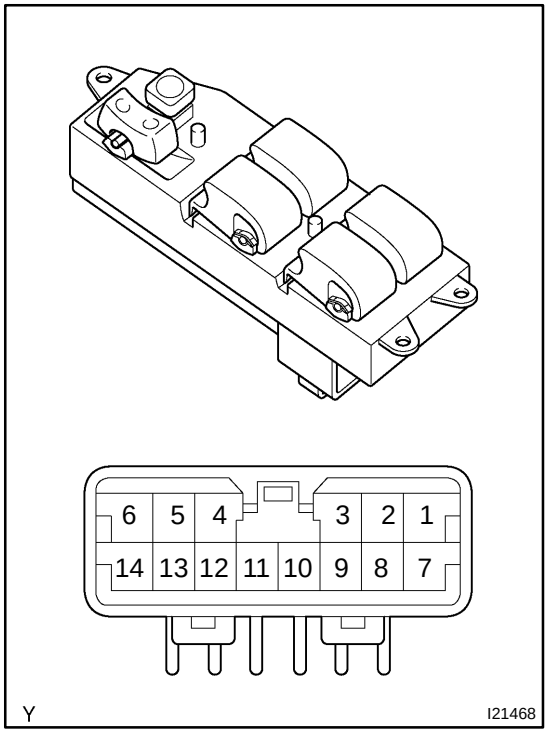

Driver's switch:

Switch position	Tester connection	Specified condition
UP	1 – 10, 3 – 5	Continuity
OFF	1 – 3 – 5	Continuity
DOWN	1 – 3, 5 – 10	Continuity
DOWN AUTO	1 – 3, 5 – 10	Continuity

Front passenger's switch (Window unlock):

Switch position	Tester connection	Specified condition
UP	3 – 6, 10 – 14	Continuity
OFF	3 – 6 – 14	Continuity
DOWN	3 – 14, 6 – 10	Continuity

Front passenger's switch (Window lock):

Switch position	Tester connection	Specified condition
UP	10 – 14	Continuity
OFF	6 – 14	Continuity
DOWN	6 – 10	Continuity

Rear left switch (Window unlock):

Switch position	Tester connection	Specified condition
UP	3 – 12, 9 – 10	Continuity
OFF	3 – 9 – 12	Continuity
DOWN	3 – 9, 10 – 12	Continuity

Rear left switch (Window lock):

Switch position	Tester connection	Specified condition
UP	9 – 10	Continuity
OFF	9 – 12	Continuity
DOWN	10 – 12	Continuity

Rear right switch (Window unlock):

Switch position	Tester connection	Specified condition
UP	3 – 13, 8 – 10	Continuity
OFF	3 – 8 – 13	Continuity
DOWN	3 – 8, 10 – 13	Continuity

Rear right switch (Window lock):

Switch position	Tester connection	Specified condition
UP	8 – 10	Continuity
OFF	8 – 13	Continuity
DOWN	10 – 13	Continuity

If continuity is not as specified, replace the switch.

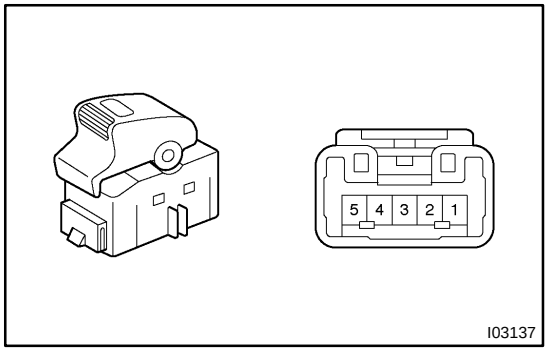

3. INSPECT FRONT POWER WINDOW CONTROL SWITCH CONTINUITY

Switch position	Tester connection	Specified condition
UP	1 – 2, 3 – 4	Continuity
OFF	1 – 2, 3 – 5	Continuity
DOWN	1 – 4, 3 – 5	Continuity

If continuity is not as specified, replace the switch.

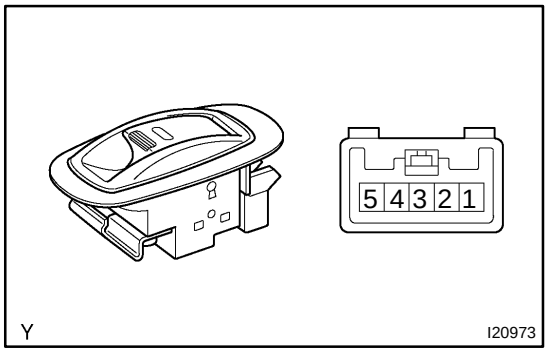

4. INSPECT REAR POWER WINDOW CONTROL SWITCH CONTINUITY

Switch position	Tester connection	Specified condition
UP	1 – 3, 4 – 5	Continuity
OFF	1 – 2, 4 – 5	Continuity
DOWN	1 – 2, 3 – 5	Continuity

If continuity is not as specified, replace the switch.

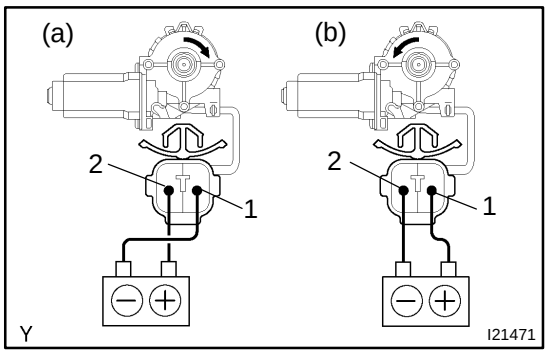

5. Driver's side:
INSPECT POWER WINDOW MOTOR OPERATION

(a) Connect the positive (+) lead from the battery to terminal 2 and negative (–) lead to terminal 1. Check that the motor turns clockwise.

(b) Reverse the polarity, check that the motor turns counter-clockwise.

If operation is not as specified, replace the motor.

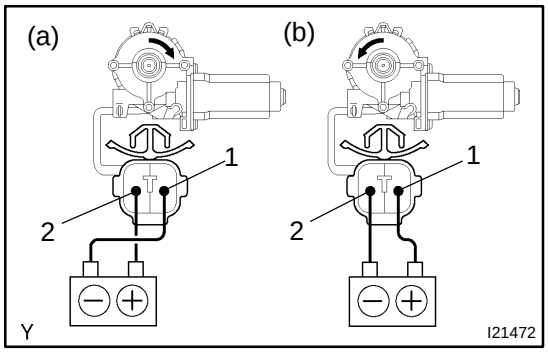

6. Front passenger's side:
INSPECT POWER WINDOW MOTOR OPERATION

(a) Connect the positive (+) lead from the battery to terminal 2 and negative (–) lead to terminal 1. Check that the motor turns clockwise.

(b) Reverse the polarity, check that the motor turns counter-clockwise.

If operation is not as specified, replace the motor.

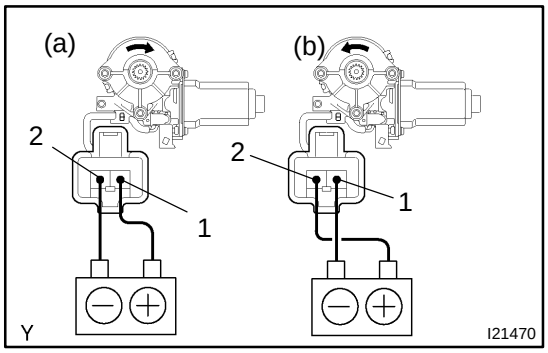

7. Rear LH side:
INSPECT POWER WINDOW MOTOR OPERATION

(a) Connect the positive (+) lead from the battery to terminal 1 and negative (–) lead to terminal 2. Check that the motor turns clockwise.

(b) Reverse the polarity, check that the motor turns counter-clockwise.

If operation is not as specified, replace the motor.

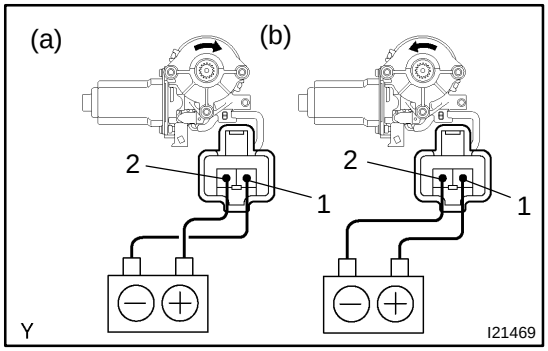

8. Rear RH side:
INSPECT POWER WINDOW MOTOR OPERATION

(a) Connect the positive (+) lead from the battery to terminal 2 and negative (–) lead to terminal 1. Check that the motor turns clockwise.

(b) Reverse the polarity, check that the motor turns counter-clockwise.

If operation is not as specified, replace the motor.

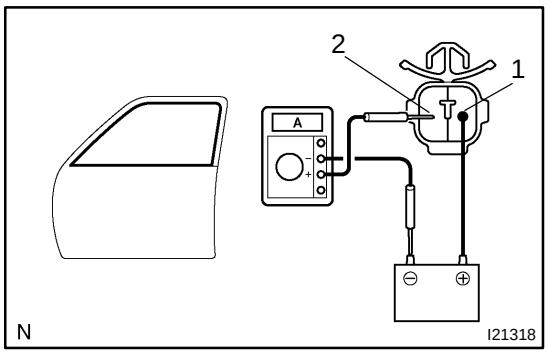

9. Driver's door:
INSPECT POWER WINDOW MOTOR PTC THERMISTOR OPERATION

(a) Disconnect the connector from the power window motor.
(b) Connect the positive (+) lead from the ammeter to terminal 2 on the wire harness side connector and the negative (–) lead to negative terminal of the battery.
(c) Connect the positive (+) lead from the battery to terminal 1 on the wire harness side connector, and raise the window to the fully position.
(d) Continue to apply voltage, and check that the current changes to less than 1 A with 4 to 90 seconds.

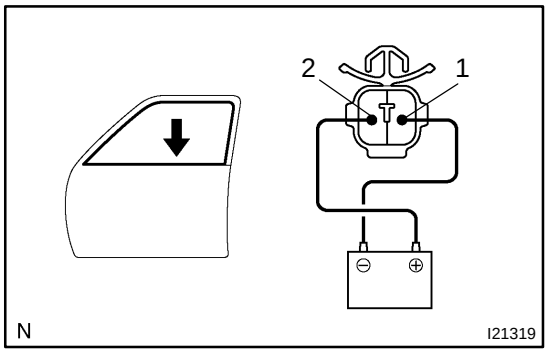

(e) Disconnect the leads from terminals.
(f) Approximately 60 seconds later, connect the positive (+) lead from the battery to terminal 2 and negative (–) lead to terminal 1, and check that the window begins to descended.

If operation is not as specified, replace the motor.

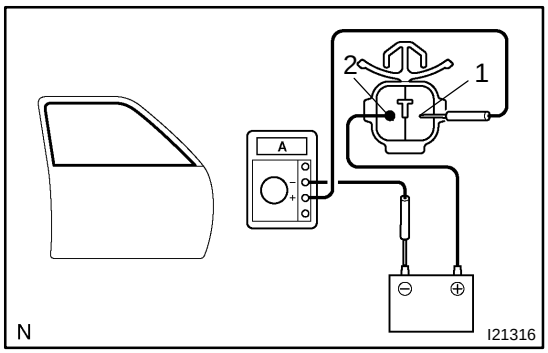

10. Front Passenger's door:
INSPECT POWER WINDOW MOTOR PTC THERMISTOR OPERATION

(a) Disconnect the connector from the power window motor.
(b) Connect the positive (+) lead from the ammeter to terminal 1 on the wire harness side connector and the negative (–) lead to negative terminal of the battery.
(c) Connect the positive (+) lead from the battery to terminal 2 on the wire harness side connector, and raise the window to the fully position.

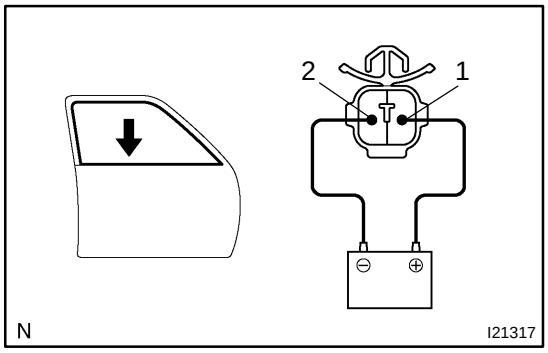

(d) Continue to apply voltage and check that the current changes to less than 1 A within 4 to 90 seconds.
(e) Disconnect the leads from the terminals.
(f) Approximately 60 seconds later, connect the positive (+) lead from the battery to terminal 1 and the negative (–) lead to terminal 2, and check that the window begins to descend.

If operation is not as specified, replace the motor.

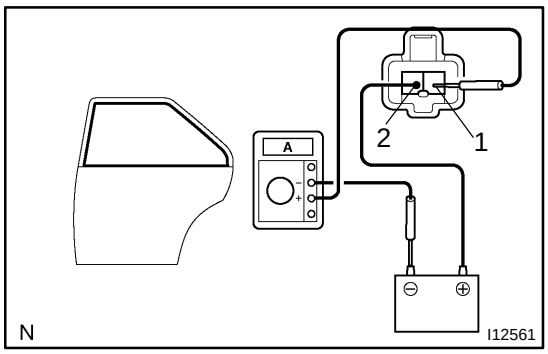

11. Rear door:

INSPECT POWER WINDOW MOTOR PTC THERMISTOR OPERATION

(a) Disconnect the connector from the power window motor.

(b) Connect the positive (+) lead from the ammeter to terminal 1 on the wire harness side connector and the negative (–) lead to negative terminal of the battery.

(c) Connect the positive (+) lead from the battery to terminal 2 on the wire harness side connector, and raise the window to the fully position.

(d) Continue to apply voltage and check that the current changes to less than 1 A within 4 to 90 seconds.

(e) Disconnect the leads from the terminals.

(f) Approximately 60 seconds later, connect the positive (+) lead from the battery to terminal 1 and the negative (–) lead to terminal 2, and check that the window begins to descend.

If operation is not as specified, replace the motor.

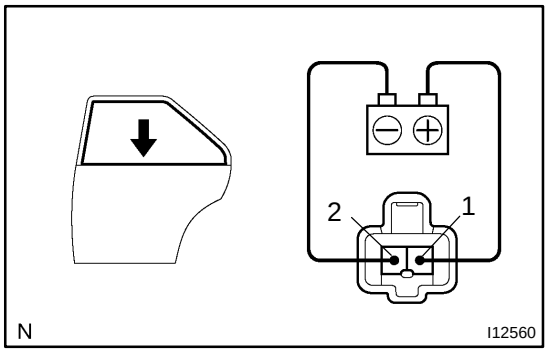

12. INSPECT POWER MAIN (Marking : PWR) RELAY CONTINUITY

Condition	Tester connection	Specified condition
Constant	1 – 2	Continuity
Apply B+ between terminals 1 and 2.	3 – 5	Continuity

If continuity is not as specified, replace the relay.

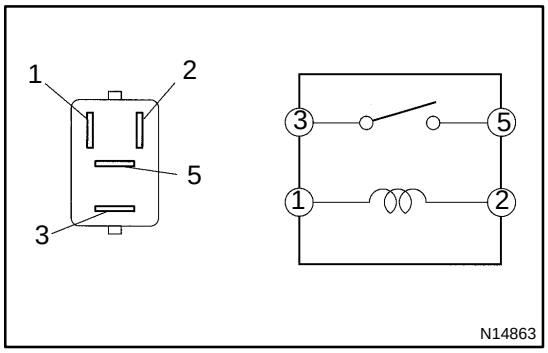

POWER WINDOW CONTROL SYSTEM

BE04D–04

LOCATION

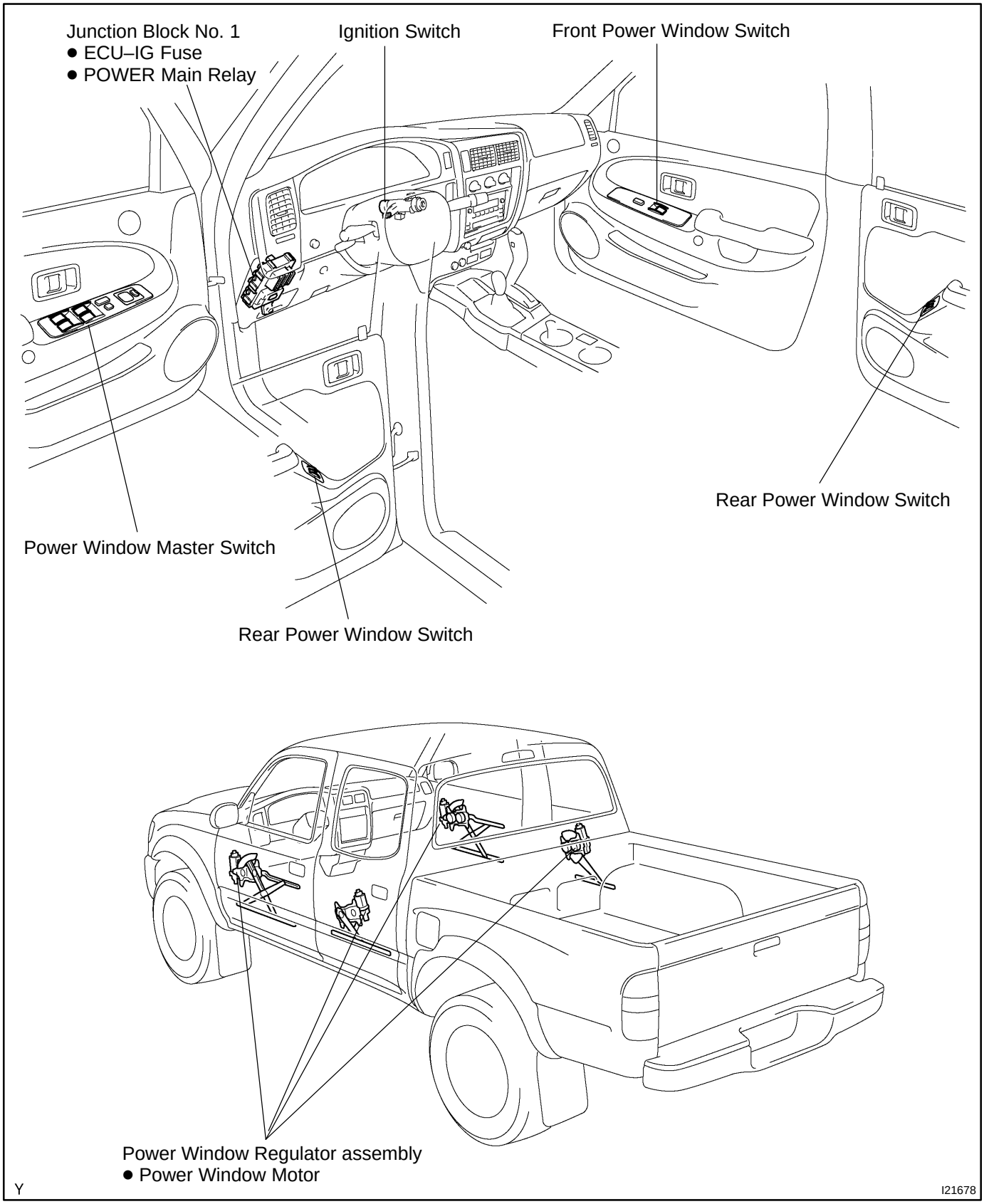

BE24G–01

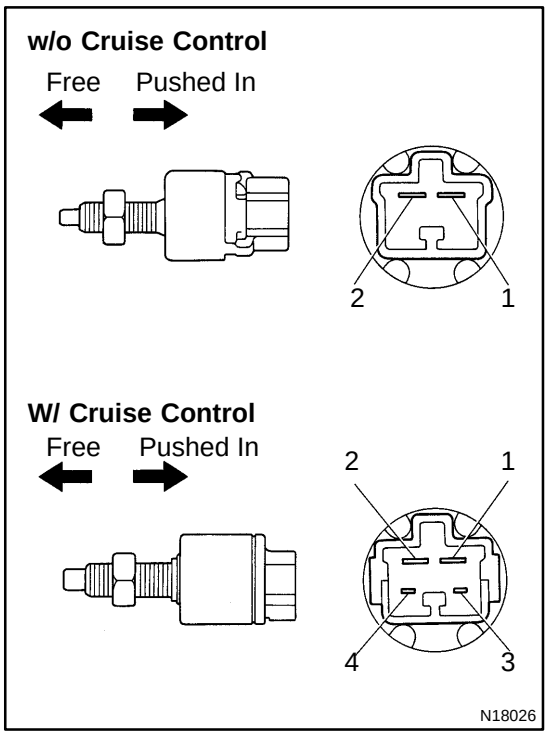

INSPECTION

INSPECT STOP LIGHT SWITCH CONTINUITY

w/o Cruise control:

Switch position	Tester connection	Specified condition
Switch pin free	1 – 2	Continuity
Switch pin pushed in	1 – 2	No continuity

If continuity is not as specified, replace the switch.

w/ Cruise control:

Switch position	Tester connection	Specified condition
Switch pin free	1 – 2	Continuity
Switch pin pushed in	1 – 2	No continuity
Switch pin free	3 – 4	No continuity
Switch pin pushed in	3 – 4	Continuity

If continuity is not as specified, replace the switch.

STOP LIGHT SYSTEM

LOCATION

BE046–02

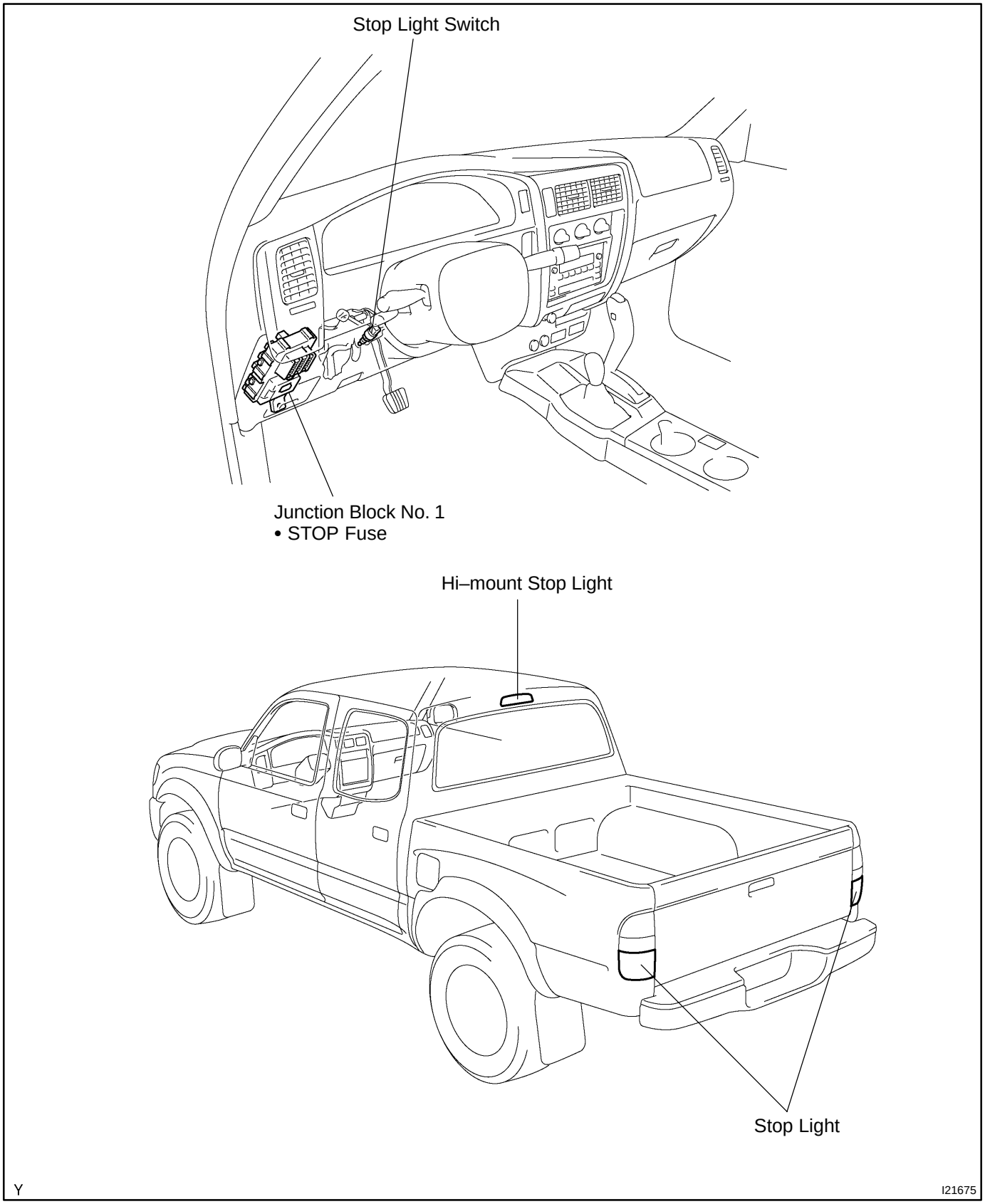

TROUBLESHOOTING

BE0ON–18

PROBLEM SYMPTOMS TABLE

IGNITION SWITCH AND KEY UNLOCK WARNING SWITCH

Symptom	Suspected Area	See page
Ignition switch is not set to each position.	11. Ignition switch	BE–14
”Key unlock warning system” does not operate.	1. GAUGE fuse 2. Key unlock warning switch 3. Door courtesy switch 4. Wire harness	BE–10 BE–14 BE–24 –

w/ Daytime Running Light System:
HEADLIGHT AND TAILLIGHT SYSTEM

Symptom	Suspected Area	See page
Headlight does not light. (Taillight is normal.)	1. Headlight dimmer switch 2. Light control switch 3. Headlight control relay 4. Daytime running light relay 5. Headlight dimmer relay 6. Daytime running light No. 4 relay 7. Body ECU 8. Headlight bulb 9. Wire harness	BE–17 BE–17 BE–17 BE–17 BE–17 BE–17 DI–768 – –
Headlight does not light. (Taillight does not light up.)	1. Headlight dimmer switch 2. Light control switch 3. Headlight control relay 4. Daytime running light relay 5. Headlight dimmer relay 6. Daytime running light No. 4 relay 7. Headlight bulb 8. Wire harness	BE–10 BE–17 BE–17 BE–17 BE–17 BE–17 – –
Only one side light does not light.	1. HEAD fuse (HI LH, HI RH, LO LH, LO RH) 2. Headlight bulb 3. Wire harness	BE–10 – –
”Lo–beam” does not light. (All)	1. HEAD fuse (LO LH, LO RH) 2. Headlight dimmer switch 3. Headlight dimmer relay 4. Headlight bulb 5. Wire harness	BE–10 BE–17 BE–17 – –
”Lo–beam” does not light. (One side)	1. HEAD fuse (LO LH, LO RH) 2. Headlight bulb 3. Wire harness	BE–10 – –
”Hi–beam” does not light. (All)	1. HEAD fuse (HI LH, HI RH) 2. Headlight dimmer switch 3. Headlight dimmer relay 4. Headlight bulb 5. Wire harness	BE–10 BE–17 BE–17 – –
”Hi–beam” does not light. (One side)	1. HEAD fuse (HI LH, HI RH) 2. Headlight bulb 3. Wire harness	BE–10 – –
”Flash” does not light.	1. Headlight dimmer switch 2. Wire harness	BE–17 –
Headlight does not light with light control switch in HEAD.	1. Light control switch 2. Wire harness	BE–17 –

Headlight does not go out with light control switch in OFF.	1. Light control switch 2. Wire harness	BE–17 –
Taillight does not light with light control switch in TAIL.	1. Taillight control relay 2. TAIL fuse 3. Light control switch 4. Wire harness	BE–17 BE–10 BE–17 –
Taillight does not go out with light control switch in OFF.	1. Taillight control relay 2. TAIL fuse 3. Light control switch 4. Wire harness	BE–17 BE–10 BE–17 –
Headlight does not light with engine running and light control switch in OFF.	1. ECU–B fuse 2. Generator L terminal 3. Daytime running light relay 4. Wire harness	BE–10 – BE–17 –

w/o Daytime Running Light System:
HEADLIGHT AND TAILLIGHT SYSTEM

Symptom	Suspected Area	See page
Headlight does not light. (Taillight is normal.)	1. HEAD fuse (LH, RH) 2. Headlight control relay 3. Headlight dimmer switch 4. Light control switch 5. Body ECU 6. Headlight bulb 7. Wire harness	BE–10 BE–17 BE–17 BE–17 DI–768 – –
Headlight does not light. (Taillight does not light up.)	1. HEAD fuse (LH, RH) 2. Headlight control relay 3. Headlight dimmer switch 4. Light control switch 5. Headlight bulb 6. Wire harness	BE–10 BE–17 BE–17 BE–17 – –
Only one side light does not light.	1. HEAD fuse (LH, RH) 2. Headlight bulb 3. Wire harness	BE–10 – –
”Lo–beam” does not light. (All)	1. HEAD fuse (LH, RH) 2. Headlight dimmer switch 3. Headlight bulb 4. Wire harness	BE–10 BE–17 – –
”Lo–beam” does not light. (One side)	1. HEAD fuse (LH, RH) 2. Headlight bulb 3. Wire harness	BE–10 – –
”Hi–beam” does not light. (All)	1. HEAD fuse (LH, RH) 2. Headlight dimmer switch 3. Headlight bulb 4. Wire harness	BE–10 BE–17 – –
”Hi–beam” does not light. (One side)	1. HEAD fuse (LH, RH) 2. Headlight bulb 3. Wire harness	BE–10 – –
”Flash” does not light.	1. HEAD fuse (LH, RH) 2. Headlight dimmer switch 3. Headlight bulb 4. Wire harness	BE–10 BE–17 – –
Headlight does not light with light control switch in HEAD.	1. Light control switch 2. Wire harness	BE–17 –

Headlight does not go out with light control switch in OFF.	1. Light control switch 2. Wire harness	BE–17 –
Taillight does not light with light control switch in TAIL.	1. Taillight control relay 2. TAIL fuse 3. Light control switch 4. Wire harness	BE–17 BE–10 BE–17 –
Taillight does not go out with light control switch in OFF.	1. Taillight control relay 2. TAIL fuse 3. Light control switch 4. Wire harness	BE–17 BE–10 BE–17 –

TURN SIGNAL AND HAZARD WARNING SYSTEM

Symptom	Suspected Area	See page
”Hazard” and ”Turn” do not light up.	1. Hazard warning switch 2. Turn signal switch 3. Wire harness	BE–22 BE–22 –
The flashing frequency is abnormal.	1. Bulb 2. Turn signal flasher relay 3. Wire harness	– BE–22 –
Hazard warning light does not light up. (Turn is normal.)	1. HORN. HAZ fuse 2. Hazard warning switch 3. Wire harness	BE–10 BE–22 –
Hazard warning light does not light up in one direction.	1. Hazard warning switch 2. Wire harness	BE–22 –
Turn signal does not light up.	1. TURN fuse 2. Ignition switch 3. Turn signal switch 4. Wire harness	BE–10 BE–14 BE–22 –
Turn signal does not light up in one direction.	1. Turn signal switch 2. Wire harness	BE–22 –
Only one bulb does not light up.	1. Bulb 2. Wire harness	– –

INTERIOR LIGHT SYSTEM

Symptom	Suspected Area	See page
Personal light does not light up.	1. Bulb 2. Personal light 3. Body ECU 4. Wire harness	– BE–24 DI–768 –
Room light does not light up.	1. Bulb 2. Room light 3. Door courtesy switch 4. Body ECU 5. Wire harness	– BE–24 BE–24 DI–768 –

BACK–UP LIGHT SYSTEM

Symptom	Suspected Area	See page
Back–up light does not light up.	1. GAUGE fuse 2. Ignition switch 3. Back–up light switch 4. Bulb 5. Wire harness	BE–10 BE–14 BE–27 – –

Back–up light remains always ON.	1. Back–up light switch (M/T) 2. Park/Neutral position switch (A/T) 3. Wire harness	BE–27 AT–22 or AT–9, DI–482 –
Only one light does not light up.	1. Bulb 2. Wire harness	– –

STOP LIGHT SYSTEM

Symptom	Suspected Area	See page
Stop light does not light up.	1. STOP fuse 2. Stop light switch 3. Bulb 4. Wire harness	BE–10 BE–29 – –
Stop light remains always ON.	1. Stop light switch 2. Wire harness	BE–29 –
Only one light does not light up.	1. Bulb 2. Wire harness	– –

WIPER AND WASHER SYSTEM

Symptom	Suspected Area	See page
Wipers and washers do not operate.	1. WIPER fuse 2. Ignition switch 3. Wiper and washer switch 4. Wire harness	BE–10 BE–14 BE–31 –
Wiper does not operate.	1. WIPER fuse 2. Wiper and washer switch 3. Wiper motor 4. Wire harness	BE–10 BE–31 BE–31 –
Washer does not operate.	1. WIPER fuse 2. Wiper and washer switch 3. Washer motor 4. Wire harness	BE–10 BE–31 BE–31 –

Meter, Gauges and Illumination:
COMBINATION METER

Symptom	Suspected Area	See page
Tachometer, fuel gauge and water temperature gauge do not operate.	1. GAUGE fuse 2. Body ECU 3. Meter circuit 4. Wire harness	BE–10 DI–768 BE–37 –
Speedometer does not operate.	1. Vehicle speed sensor 2. Meter circuit 3. Wire harness	BE–39 BE–37 –
Tachometer does not operate.	1. ECM 2RZ–FE, 3RZ–FE 5VZ–FE 2. Meter circuit 3. Wire harness 4. Igniter	DI–22 DI–240 BE–37 – IG–1 or IG–1
Fuel gauge does not operate or abnormal operation.	1. Fuel receiver gauge 2. Fuel sender gauge 3. Meter circuit 4. Wire harness	BE–39 BE–39 BE–37 –

Engine coolant temperature gauge does not operate or abnormal operation.	1. Engine coolant temperature receiver gauge 2. Engine coolant temperature sender gauge 3. ECM 2RZ–FE, 3RZ–FE 5VZ–FE 4. Meter circuit 5. Wire harness	BE–39 BE–39 DI–22 DI–240 BE–37 –
All illumination lights do not light up.	1. Light control rheostat 2. Meter circuit 3. Wire harness	BE–39 BE–37 –
Only one illumination light does not light up.	1. Bulb 2. Meter circuit	– BE–37

Warning Lights:
COMBINATION METER

Symptom	Suspected Area	See page
Warning lights do not light up. (Except discharge)	1. Bulb 2. GAUGE fuse 3. Ignition switch 4. Meter circuit 5. Wire harness	– BE–10 BE–14 BE–37 –
Low oil pressure warning light does not light up.	1. Bulb 2. Oil pressure warning switch 3. Meter circuit 4. Wire harness	– BE–39 BE–37 –
Brake warning light does not light up.	1. Bulb 2. Brake fluid level warning switch 3. Parking brake switch 4. Meter circuit 5. Wire harness	– BE–39 BE–39 BE–37 –
Washer level warning light does not light up.	1. Bulb 2. Washer fluid level warning switch 3. Meter circuit 4. Wire Harness	– BE–39 BE–37 –
Discharge warning light does not light up.	1. IGN Fuse 2. Bulb 3. Wire harness 4. Generator	– – –
Seat belt warning light does not light up.	1. Bulb 2. Seat belt buckle switch 3. Body ECU 4. Meter circuit 5. Wire harness	– BE–39 BE–37 –

Indicator Lights:
COMBINATION METER

Symptom	Suspected Area	See page
SRS indicator light does not light up.	1. Bulb 2. Airbag sensor assembly 3. Meter circuit 4. Wire harness	– DI–586 BE–37 –
ABS indicator light does not light up.	1. Bulb 2. ABS ECU 3. Meter circuit 4. Wire harness	– DI–543 BE–37 –

Malfunction indicator light does not light up.	1. Bulb 2. ECM 2RZ–FE, 3RZ–FE 5VZ–FE 3. Wire harness	– DI–22 DI–240 –
Turn indicator light does not light up.	1. Bulb 2. Turn signal and hazard warning system 3. Meter circuit 4. Wire harness	– BE–2 BE–37 –
High beam indicator light does not light up.	1. Bulb 2. Headlight and taillight system 3. Meter circuit 4. Wire harness	– BE–2 BE–37 –
O/D OFF indicator light does not light up	1. Bulb 2. Meter Circuit 3. ECM 4. Wire Harness	– BE–37 AT–2 or DI–522 –
A/T OIL TEMP. indicator light does not light up	1. Bulb 2. Meter Circuit 3. ECM 4. Wire Harness	– BE–37 DI–473 –
ECT PWR indicator light does not light up	1. Bulb 2. Meter Circuit 3. Pattern select switch 4. Wire Harness	– BE–37 DI–528 –
A/T P indicator light does not light up	1. Bulb 2. Meter Circuit 3. ECM 2RZ–FE, 3RZ–FE 5VZ–FE 4. Wire Harness	– BE–37 DI–22 DI–240 –
Cruise control indicator lights do not light up	1. Bulb 2. Meter Circuit 3. ECM (w/ ETCS) 4. Cruise ECU (w/o ETCS) 5. Wire Harness	– BE–37 DI–699 DI–728 –

POWER WINDOW CONTROL SYSTEM

Symptom	Suspected Area	See page
Power window does not operate.	1. ECU–IG fuse 2. Ignition switch 3. Power window master switch 4. Power window control switch 5. Power main relay 6. Body ECU 7. Wire harness	BE–10 BE–10 BE–48 BE–48 BE–48 –
”One touch power window system” does not operate.	1. Power window master switch	BE–48
Only one window glass does not move.	1. Power window master switch 2. Power window control switch 3. Power window motor 4. Wire harness	BE–48 BE–48 BE–48 –
”Window lock system” does not operate.	1. Power window master switch	BE–48
Illumination does not light up.	1. Power window master switch	BE–48

POWER DOOR LOCK CONTROL SYSTEM

Symptom	Suspected Area	See page
”Door lock control system” does not operate. (All)	1. ECU–IG fuse 2. DOME fuse 3. Body ECU 4. Wire harness 5. Other parts	BE–10 BE–10 DI–765 – –
Malfunction in door lock / unlock. (Using door manual switch.)	1. Door lock control switch 2. Wire harness 3. Other parts	BE–54 – –
Malfunction in door lock / unlock. (Using door manual switch and key.)	1. Wire harness 2. Other parts	– –
Malfunction in door lock / unlock. (Using key.)	1. Door key lock and unlock warning switch 2. Door unlock detection switch 3. Wire harness 4. Other parts	BE–54 – –
Fault in 2 – operation unlock function of driver’s side door key lock and unlock switch.	1. Door key lock and unlock warning switch 2. Door unlock detection switch 3. Wire harness 4. Other parts	BE–54 – –
Fault in key confine prevention operation.	1. Door unlock detection switch 2. Door courtesy switch 3. Door lock control switch 4. Wire harness 5. Other parts	BE–54 BE–24 BE–54 – –
Only one door lock does not operate.	1. Door lock motor 2. Wire harness	BE–54 –

POWER SEAT CONTROL SYSTEM

Lumbar support operation does not operate.	1. Power seat switch (Lumber support switch) 2. Lumbar support motor 3. wire Harness	BE–59 BE–59 –

POWER MIRROR CONTROL SYSTEM

Symptom	Suspected Area	See page
Mirror does not operate.	1. ACC fuse 2. Mirror switch 3. Mirror motor	BE–10 BE–62 BE–62
Mirror operates abnormally.	1. Mirror switch 2. Mirror motor 3. Wire harness	BE–62 BE–62 –

CLOCK SYSTEM

Symptom	Suspected Area	See page
Clock will not operate.	TROUBLESHOOTING NO. 1	BE–99
Clock loses or gains time.	TROUBLESHOOTING NO. 2	BE–99

HORN SYSTEM

Symptom	Suspected Area	See page
Horn system does not operate.	1. HORN. HAZ fuse 2. Horn switch 3. Horn 4. Body ECU 5. Wire harness	BE–10 –

Horns blow all the time.	1. Horn switch 2. Wire harness	BE–102 –
One horn operates but the other horn does not operate.	1. Horn 2. Wire harness	BE–102 –
Horns operate abnormally.	1. Horn 2. Wire harness	BE–102 –

BE041–03

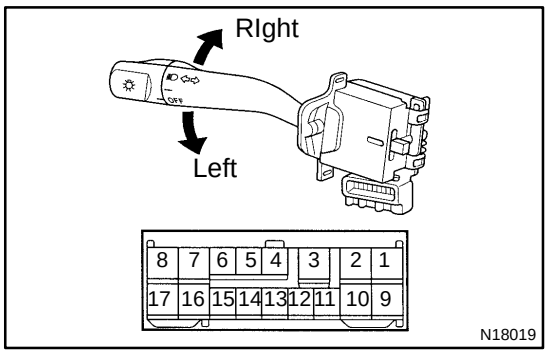

INSPECTION

1. INSPECT TURN SIGNAL SWITCH CONTINUITY

Switch position	Tester connection	Specified condition
Left turn	1 – 2	Continuity
Neutral	–	No continuity
Right turn	2 – 3	Continuity

If continuity is not as specified, replace the switch.

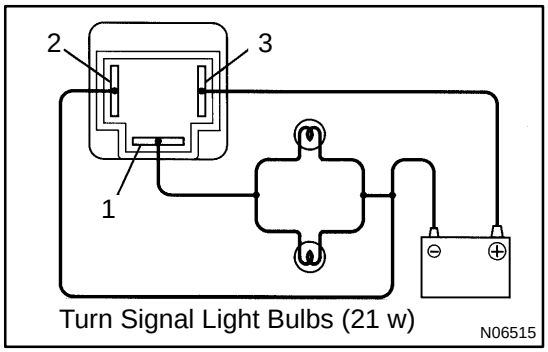

2. INSPECT TURN SIGNAL FLASHER OPERATION

(a) Connect the positive (+) lead from the battery to terminal 2 and the negative (–) lead to terminal 3.

(b) Connect the 2 turn signal light bulbs parallel to each other to terminals 1 and 3, check that the bulbs flash.

HINT:

The turn signal lights should flash 60 or 120 times per minute. If one of the front or rear turn signal lights has an open circuit, the number of flashers will be more than 140 per minute.

If operation is not as specified, replace the flasher.

3. INSPECT HAZARD WARNING SWITCH CONTINUITY

Switch position	Tester connection	Specified condition
Switch OFF	7 – 10	Continuity
Switch ON	5 – 6 – 9 7 – 8	Continuity
Illumination circuit	2 – 3	Continuity

If continuity is not as specified, replace the switch.

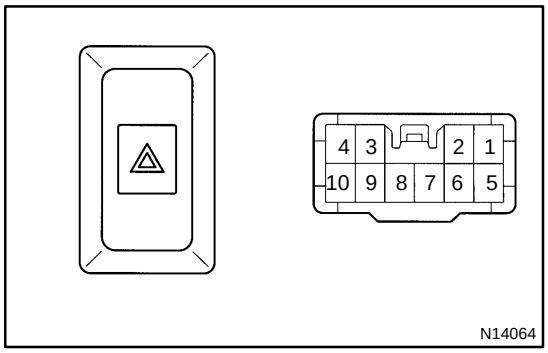

TURN SIGNAL AND HAZARD WARNING SYSTEM

BE040–02

LOCATION

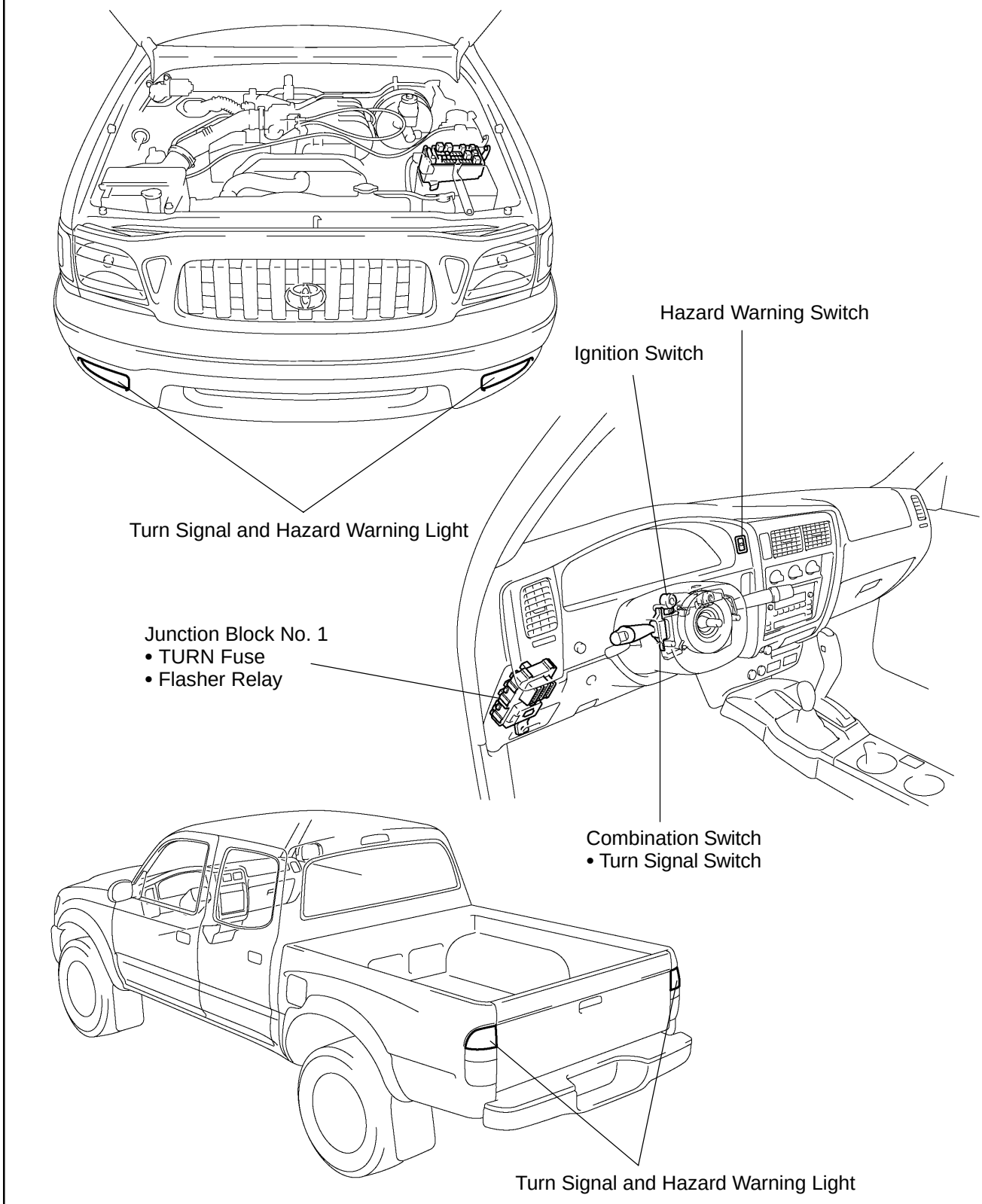

BE24H–01

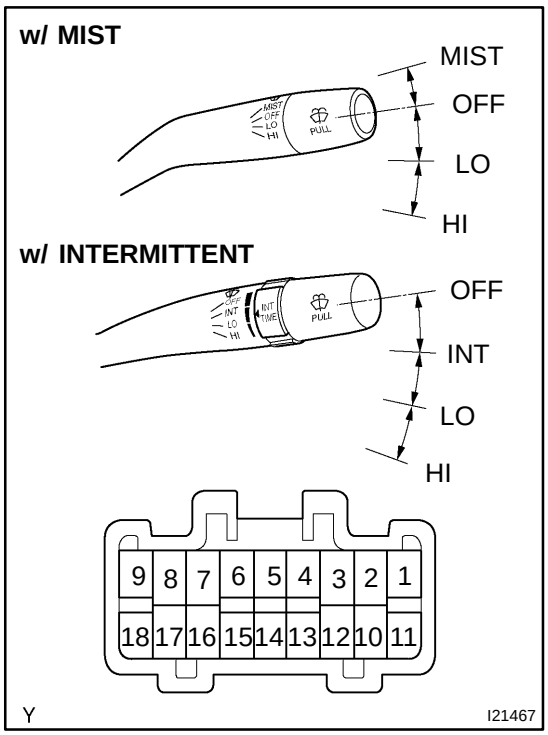

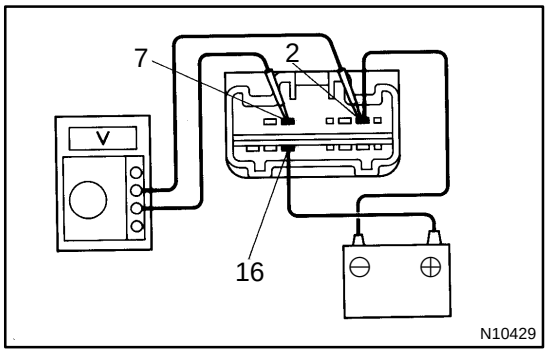

INSPECTION

1. INSPECT FRONT WIPER AND WASHER SWITCH CONTINUITY

w/ MIST:

Switch position	Tester connection	Specified condition
MIST	7 – 17	Continuity
OFF	7 – 16	Continuity
LO	7 – 17	Continuity
HI	8 – 17	Continuity
Washer ON	2 – 11	Continuity

w/ INTERMITTENT:

Switch position	Tester connection	Specified condition
OFF	7 – 16	Continuity
INT	7 – 16	Continuity
LO	7 – 17	Continuity
HI	8 – 17	Continuity
Washer ON	2 – 11	Continuity

If continuity is not as specified, replace the switch.

2. INSPECT INTERMITTENT OPERATION

(a) Turn the wiper switch to INT position.

(b) Turn the intermittent time control switch to FAST position.

(c) Connect the positive (+) lead from the battery to terminal 16 and the negative (–) lead to terminal 2.

(d) Connect the positive (+) lead from the voltmeter to terminal 7 and the negative (–) lead to terminal 2, check that the meter needle indicates battery positive voltage.

INT time control switch position	Voltage
FAST	Approx. 1–3 sec. Battery positive voltage 0 volt
SLOW	Approx. 10–15 sec. Battery positive voltage 0 volt

V03883

If operation is not as specified, replace the wiper and washer switch.

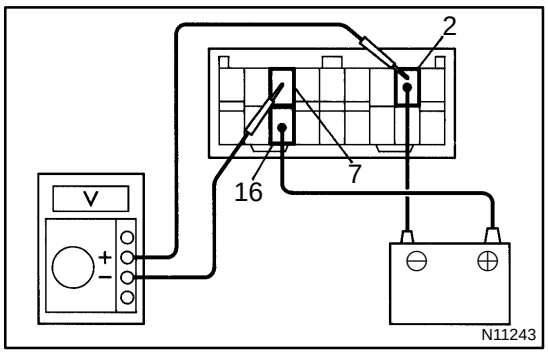

3. INSPECT WASHER LINKED OPERATION

(a) Connect the positive (+) lead from the battery to terminal 16 and the negative (–) lead to terminal 2.

(b) Connect the positive (+) lead from the voltmeter to terminal 7 and the negative (–) lead to terminal 2.

(c) Push in the washer switch, and check that the voltage changes as shown in the table.

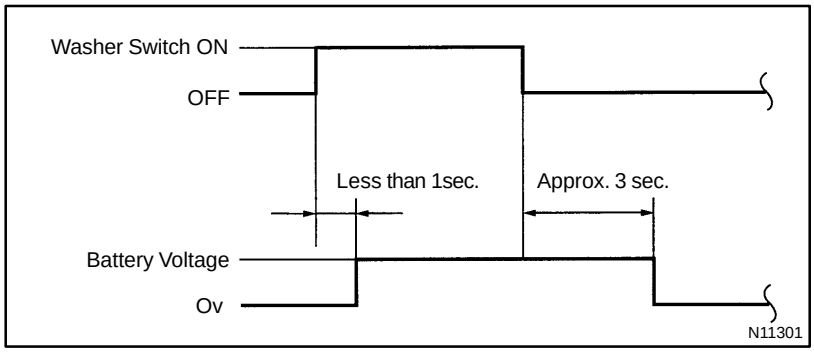

If operation is not as specified, replace the wiper and washer switch.

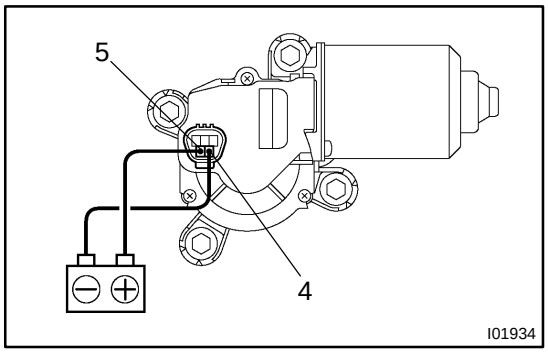

4. Low Speed:
INSPECT WIPER MOTOR OPERATION

Connect the positive (+) lead from the battery to terminal 5 and the negative (–) lead from the battery to the motor body or terminal 4, and check that the motor operates at low speed.
If operation is not as specified, replace the motor.

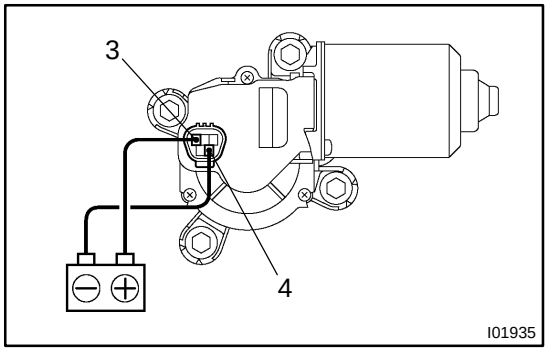

5. High Speed:
INSPECT WIPER MOTOR OPERATION

Connect the positive (+) lead from the battery to terminal 3 and the negative (–) lead from the battery to the motor body or terminal 4, and check that the motor operates at high speed.
If operation is not as specified, replace the motor.

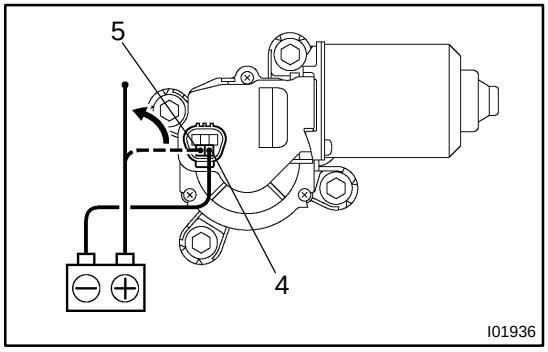

6. Stopping at Stop Position:
INSPECT WIPER MOTOR OPERATION

(a) Operate the motor at low speed and stop the motor operation anywhere except at the stop position by disconnecting positive (+) lead from terminal 5.

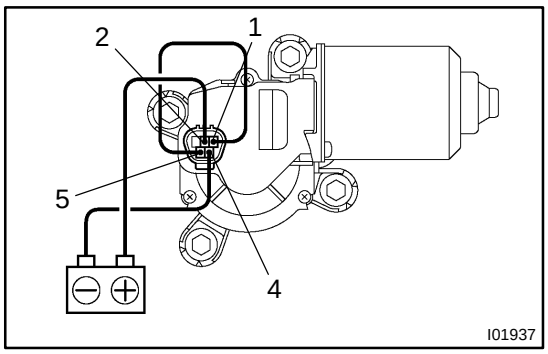

(b) Connect terminals 1 and 5.
(c) Connect the positive (+) lead from the battery to terminal 2 and the negative (–) lead from the battery to the motor body or terminal 4, and check that the motor stops running at the stop position after the motor operates again.

If operation is not as specified, replace the motor.

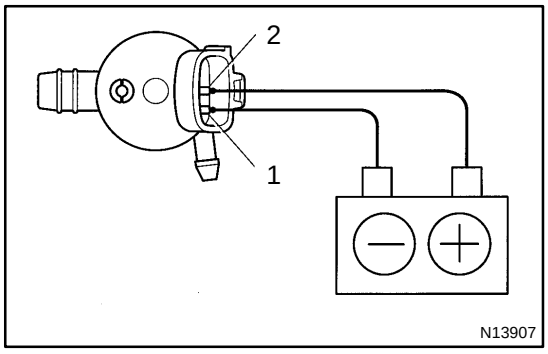

7. INSPECT WASHER MOTOR OPERATION

Connect the positive (+) lead from the battery to terminal 2 and the negative (–) lead to terminal 1, and check that the motor operates.

NOTICE:

These tests must be performed quickly (within 20 seconds) to prevent the coil from burning out.

If operation is not as specified, replace the motor.

WIPER AND WASHER SYSTEM

LOCATION

BE048–03

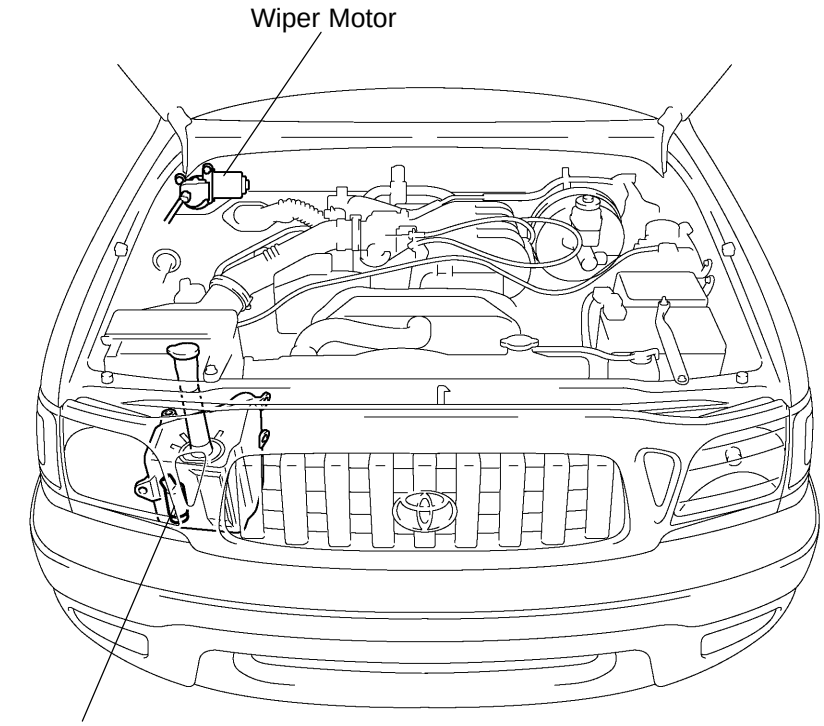

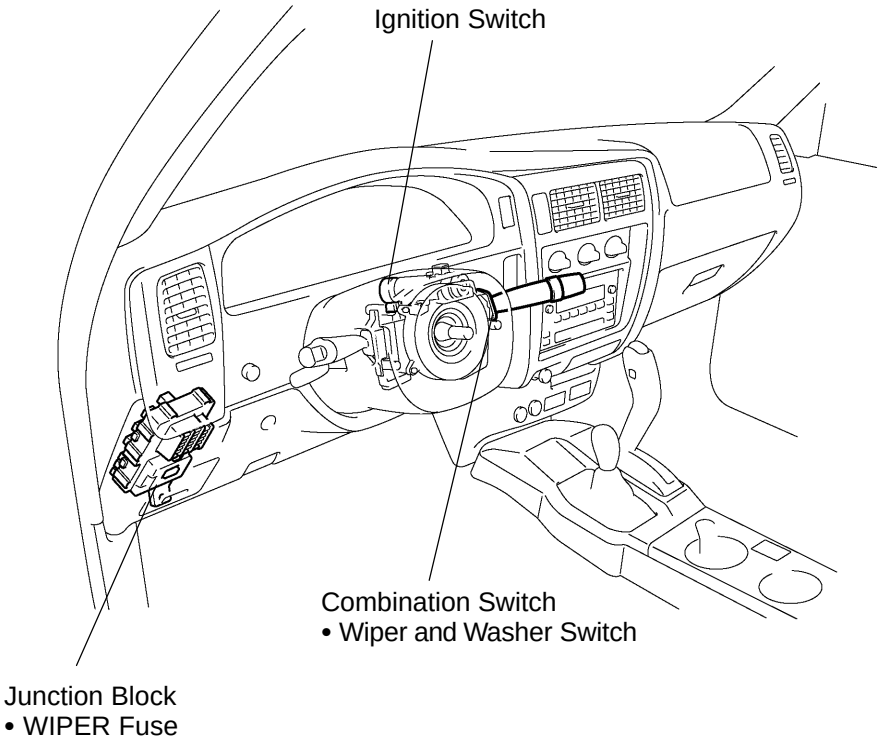

Y

I21676

BACK WINDOW GLASS

COMPONENTS

BO07L–04

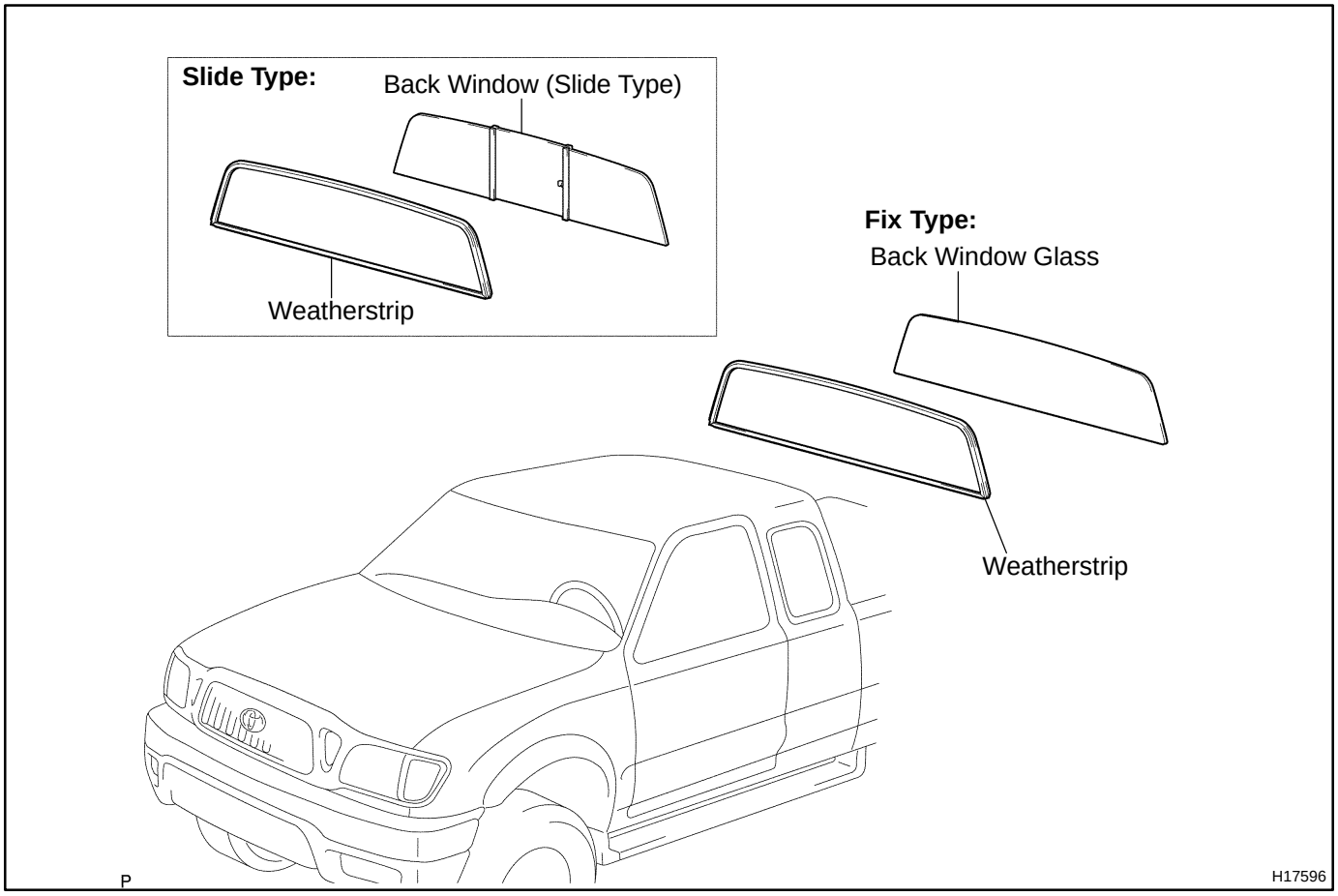

BO07P–04

INSTALLATION

HINT:

The window glass will be installed as shown in the illustration.

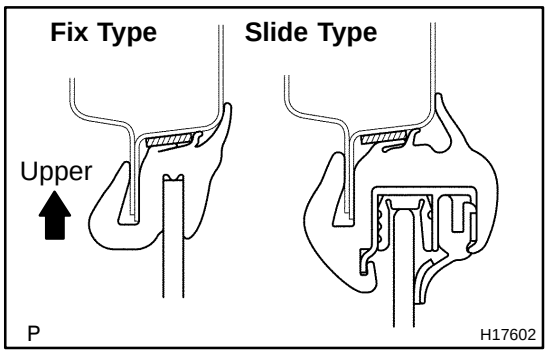

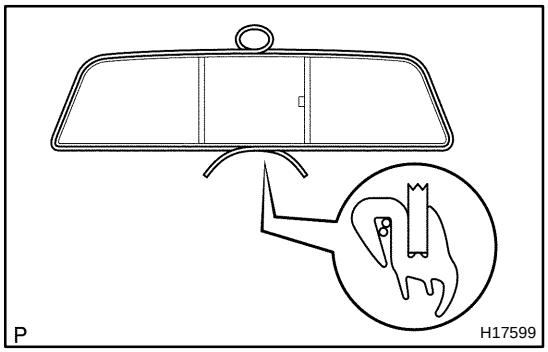

1. INSTALL BACK WINDOW GLASS WITH WINDOW FRAME

(a) Install the working cord to the frame, as shown in the illustration.

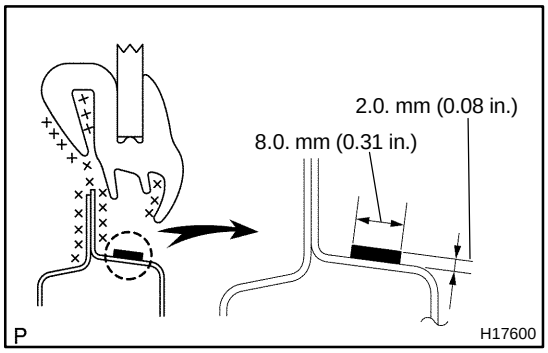

(b) Apply soapy water to the contact surface of the body and the weatherstrip lip.

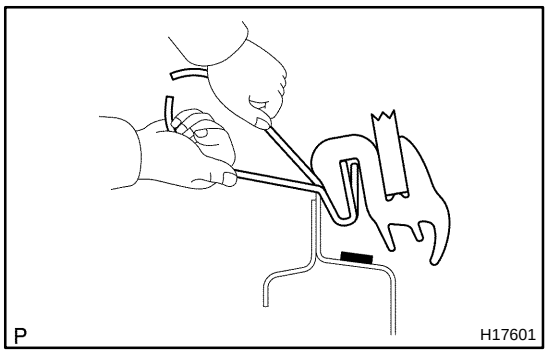

(c) Hold the glass in position on the body.

(d) Install the glass by pulling the cord from the room side, while pushing weatherstrip from the outside with your open hand.

(e) To mark the glass fit in place, tap from the outside with your open hand.

2. INSPECT FOR LEAKS AND REPAIR

(a) Conduct a leak test after the hardening time has elapsed.

(b) Seal any leak with sealant.

Part No. 08833–00030 or equivalent

3. INSTALL ROOF HEAD LINING (See page BO–61, BO–66, BO–71)

BO07M–04

REMOVAL

NOTICE:

Tape the screwdriver tip before using, to prevent damaging the body surface.

1. REMOVE ROOF HEAD LINING (See page BO–60, BO–63, BO–68)

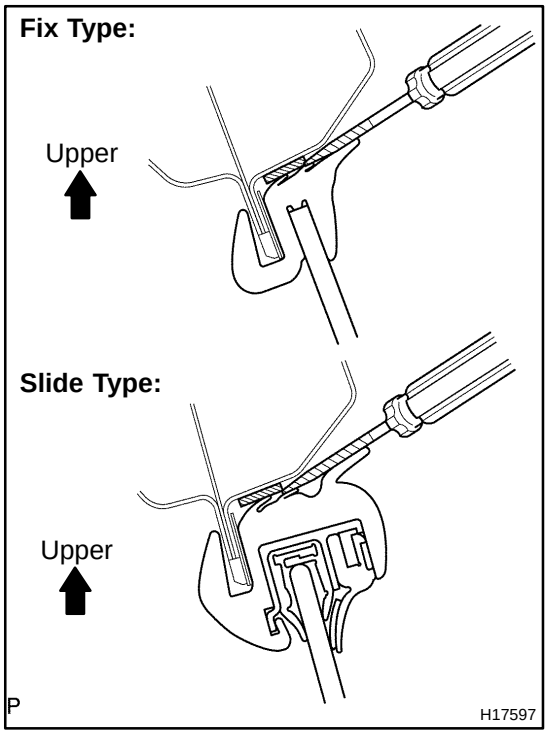

2. REMOVE BACK WINDOW GLASS WITH WINDOW FRAME

(a) Using a screwdriver, loosen the weatherstrip from the body.

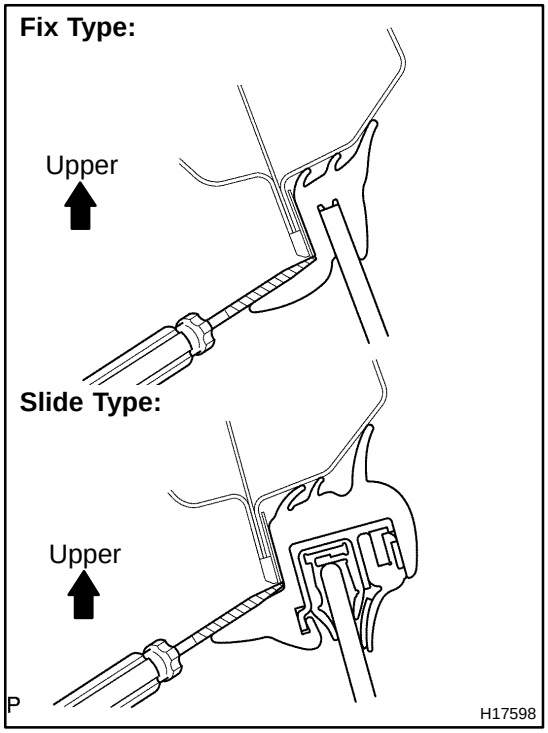

(b) Pry the lip of the weatherstrip outward from the interior part of the body flange.

(c) Pull the glass outwards, and remove it with the weatherstrip.

CLIP

BO06W–02

REPLACEMENT

The removal and installation methods of typical clips used in body parts are shown in the table below.
HINT:
If the clip is damaged during the operation, always replace it with a new clip.

Shape (Example)	Removal/Installation
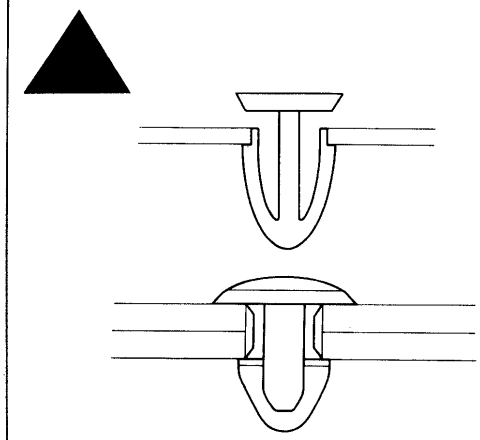	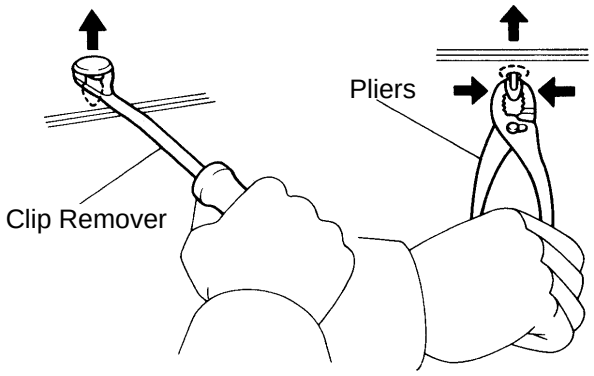
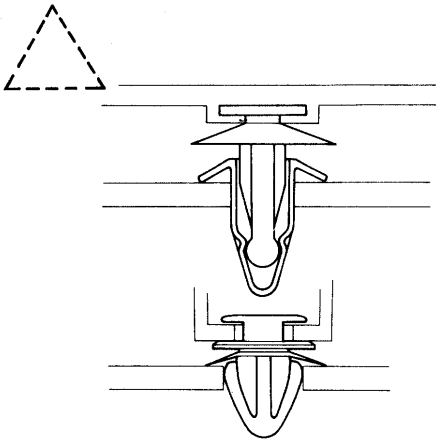	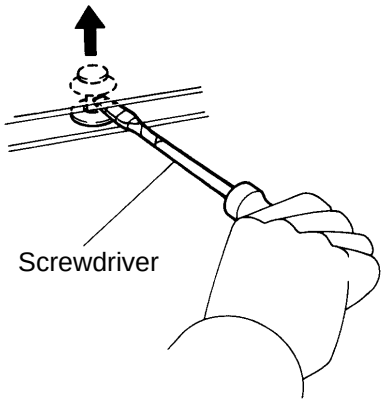
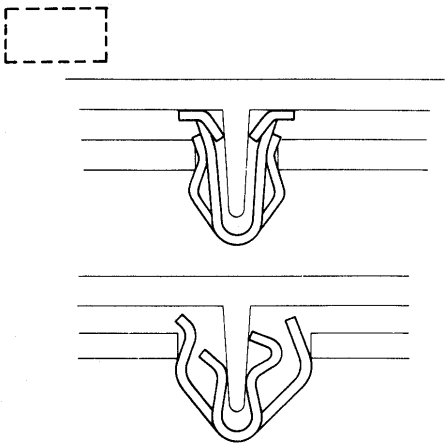	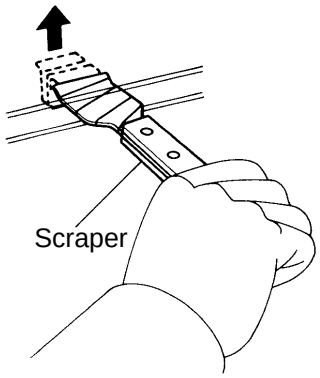

V00005

Shape (Example)	Removal/Installation
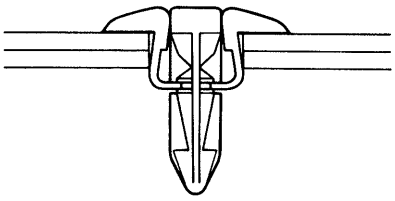	Removal Installation 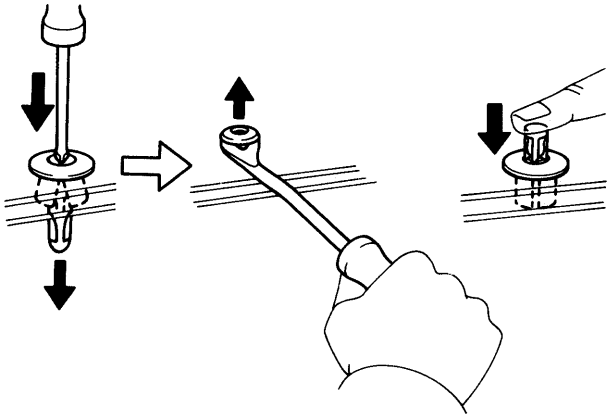
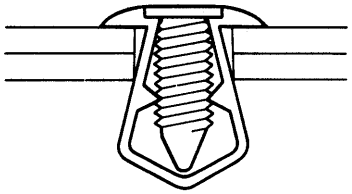	Removal Installation 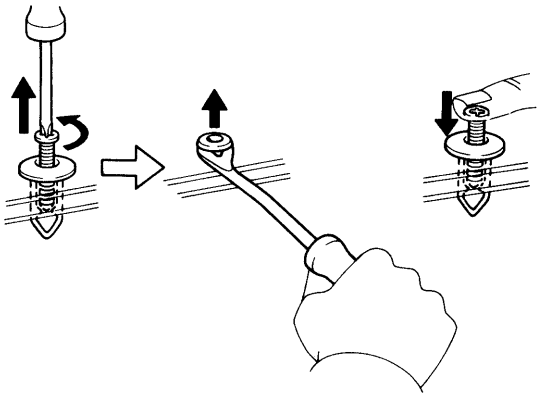

V00012

FRONT BUMPER

COMPONENTS

BO420–01

Prerunner and 4x4

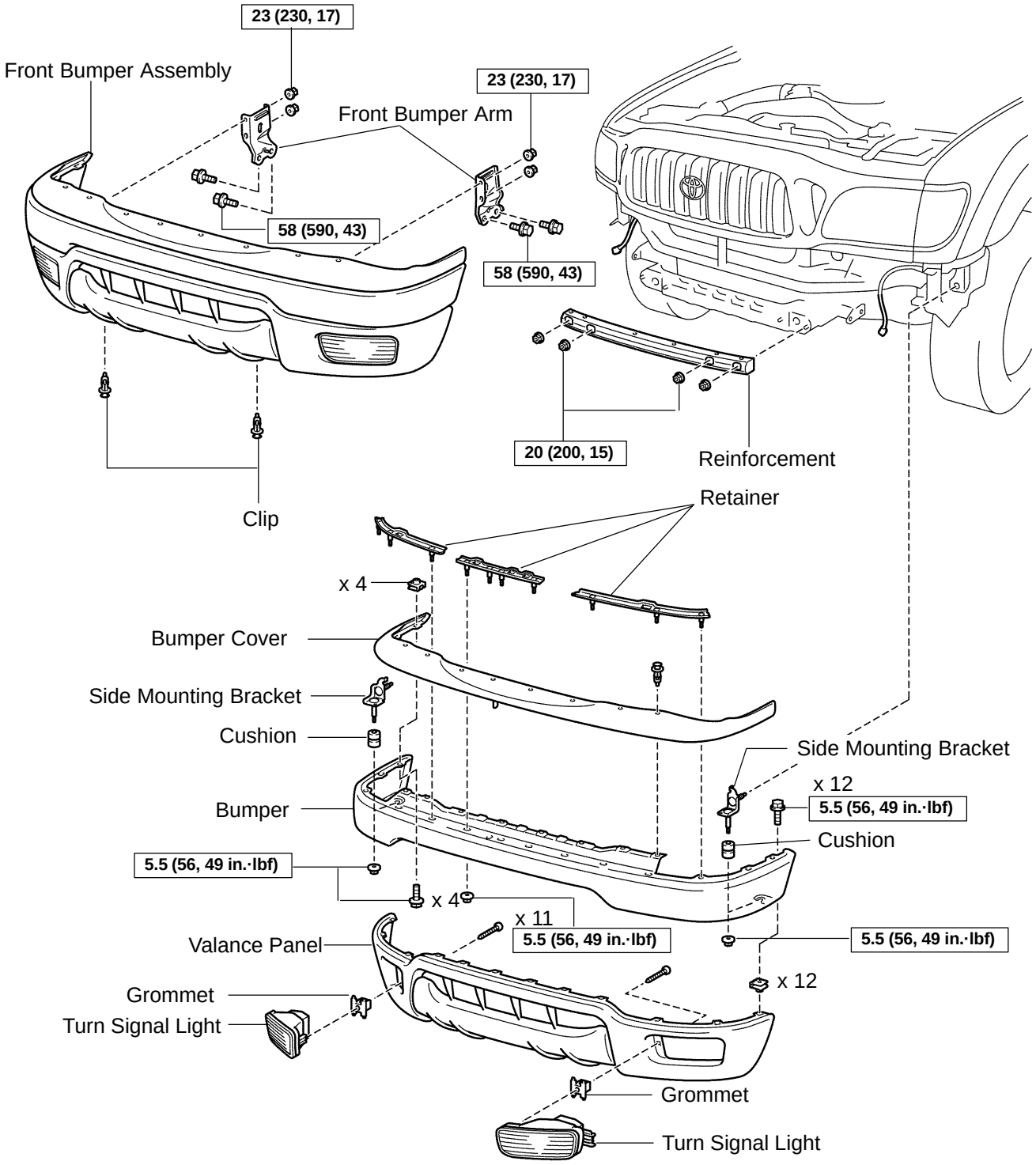

N·m (kgf·cm, ft·lbf) : Specified torque

H17330

4x2

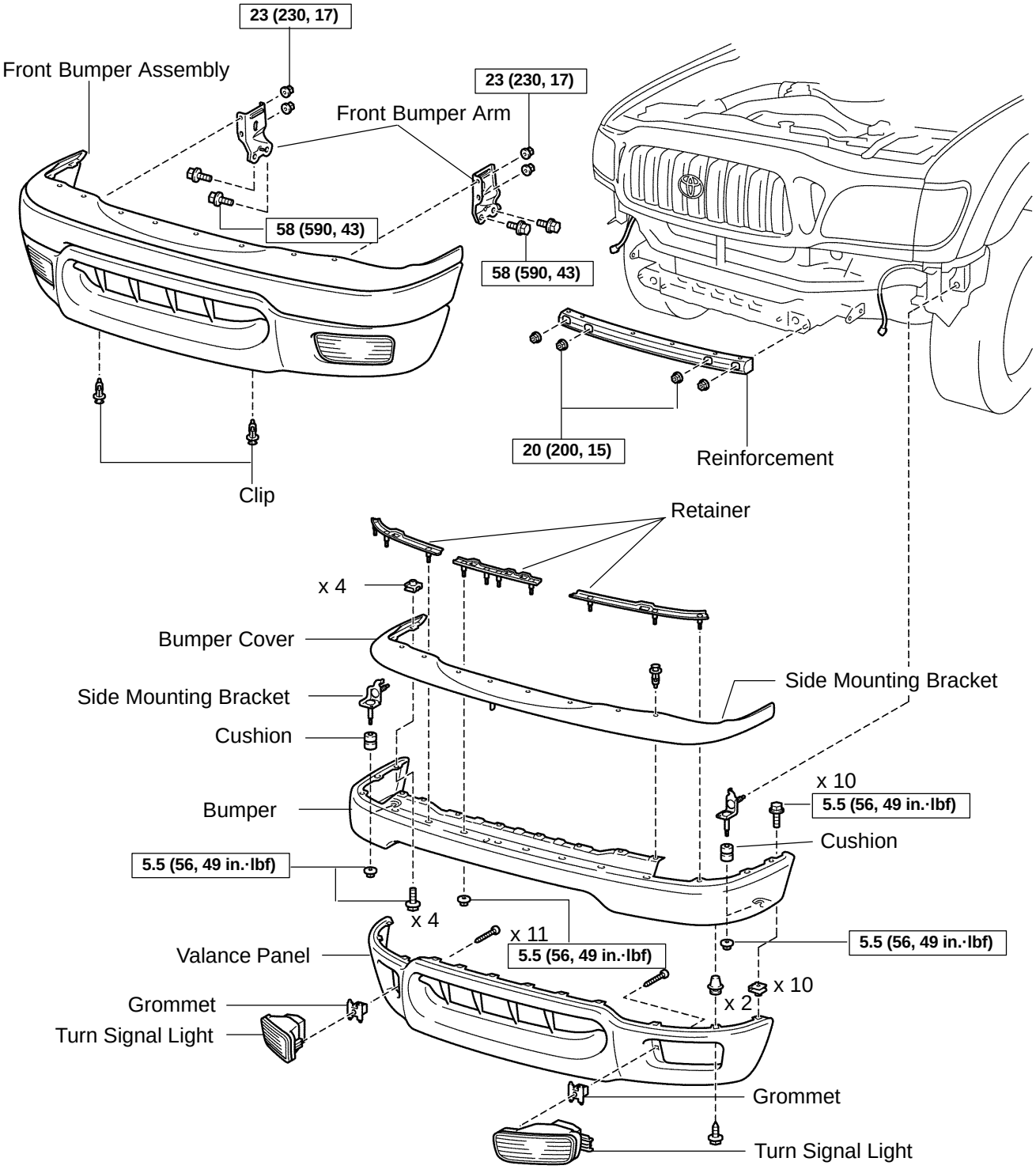

P

N·m (kgf·cm, ft·lbf) : Specified torque

H17611

BO072–03

ADJUSTMENT

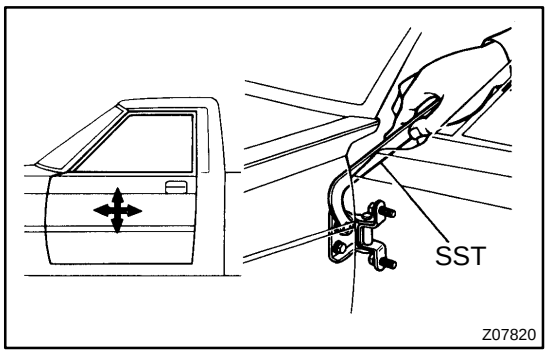

1. ADJUST DOOR IN FORWARD/REARWARD AND VERTICAL DIRECTIONS

Using SST, adjust the door by loosening the body side hinge bolts.

SST 09812–00010

Torque: 23 N·m (230 kgf·cm, 17 ft·lbf)

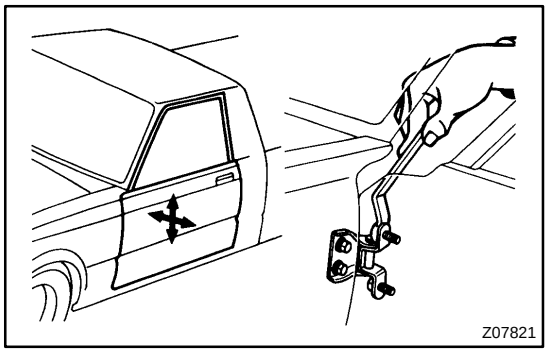

2. ADJUST DOOR IN LEFT/RIGHT AND VERTICAL DIRECTIONS

Loosen the door side hinge bolts to adjust.

HINT:

Substitute the standard bolt for the centering bolts (See page BO–11).

Torque: 23 N·m (230 kgf·cm, 17 ft·lbf)

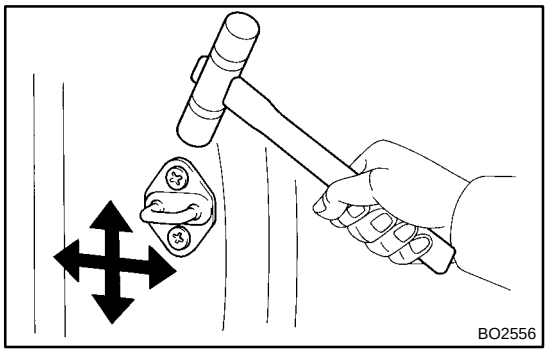

3. ADJUST DOOR LOCK STRIKER

(a) Check that the door fit and door lock linkages are adjusted correctly.

(b) Adjust the striker position by slightly loosening the striker mounting screws, and hitting the striker with a hammer.

(c) Tighten the striker mounting screws again.

Torque: 12 N·m (120 kgf·cm, 9 ft·lbf)

FRONT DOOR

COMPONENTS

BO426–01

w/o Power Door Lock and Power Window Regulator:

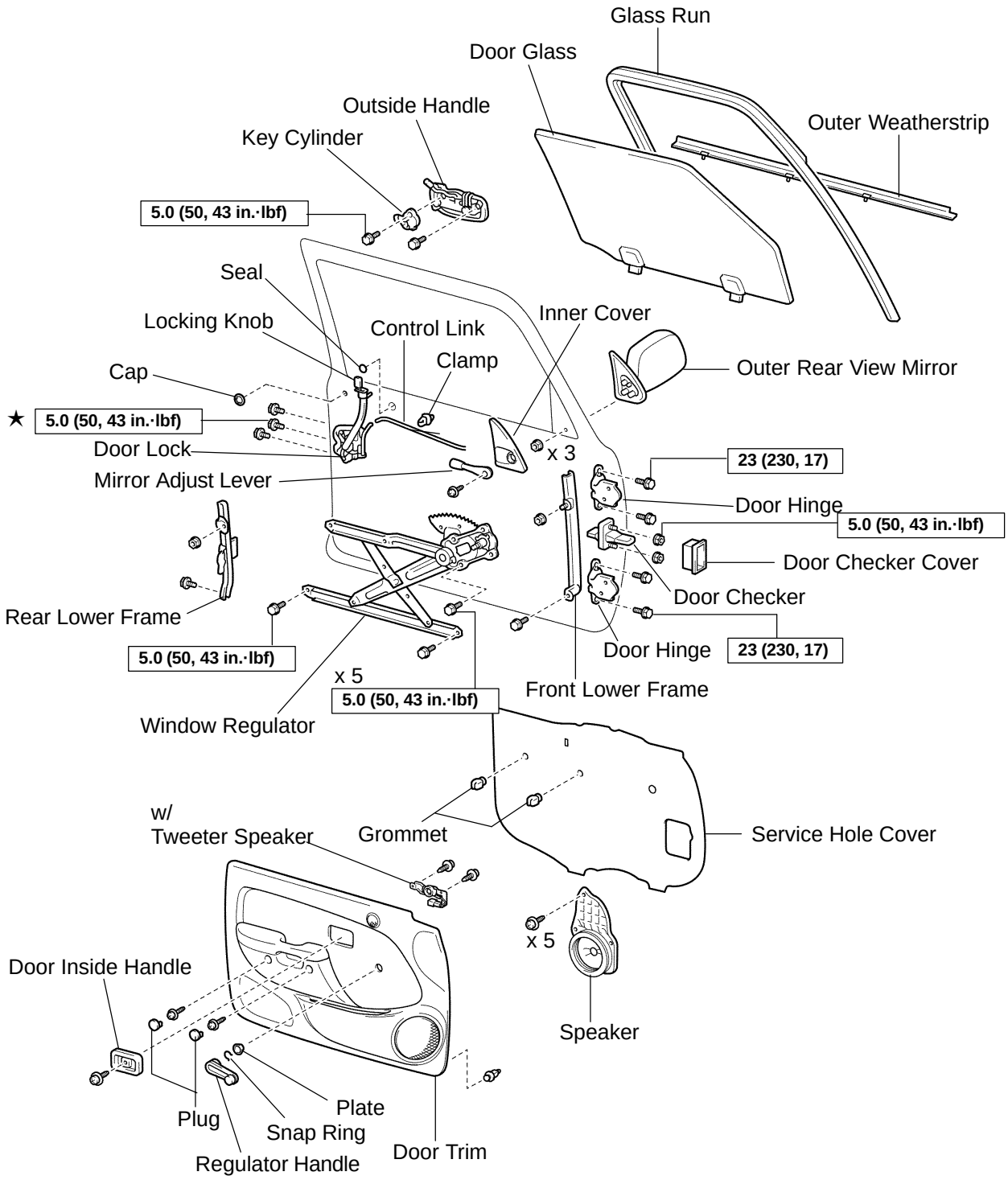

P

N·m (kgf·cm, ft·lbf) : Specified torque

★ Precoated part

H17337

w/ Power Door Lock and Power Window Regulator:

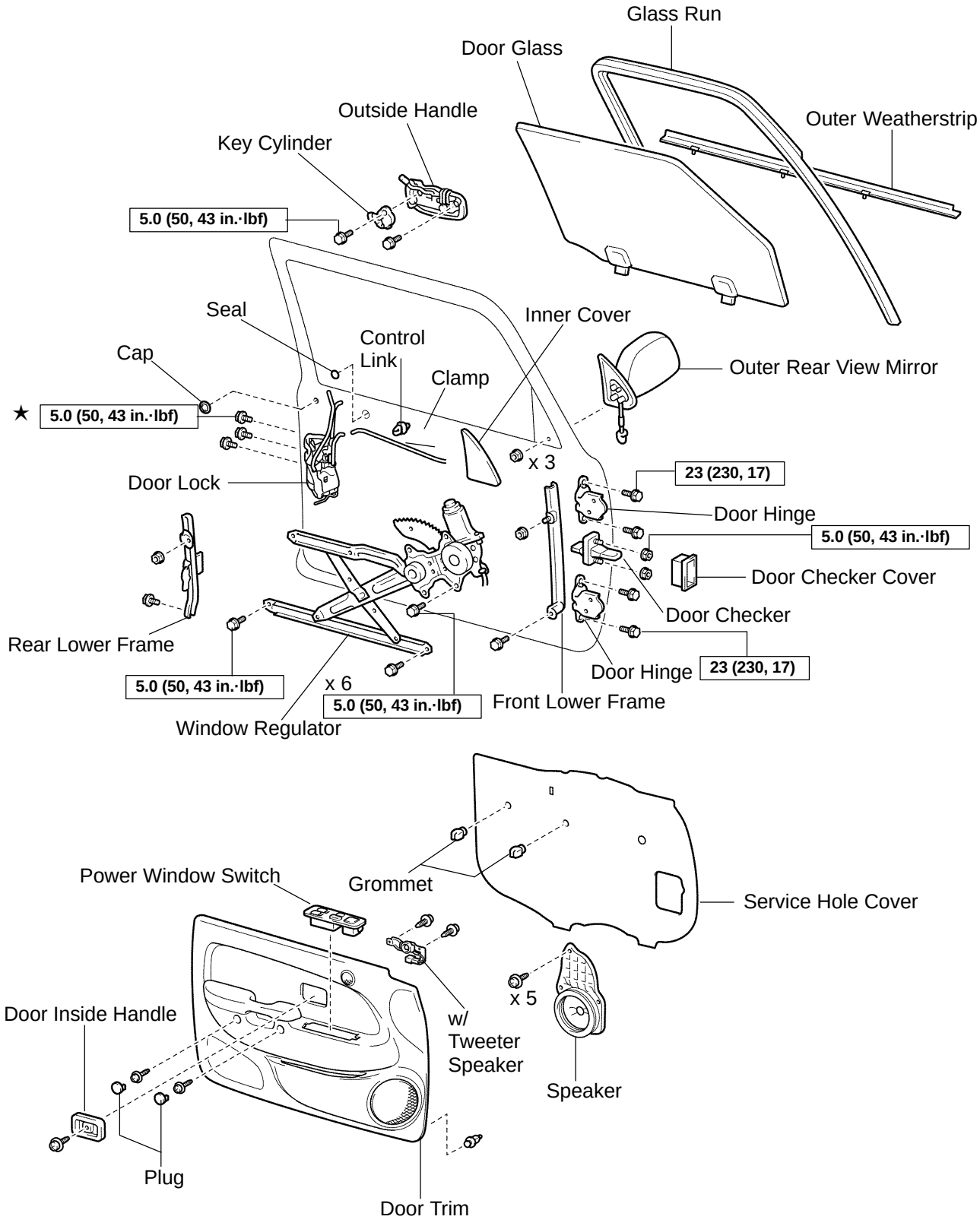

N·m (kgf·cm, ft·lbf) : Specified torque

P H17338

BO427–01

DISASSEMBLY

HINT:

Tape the screwdriver tip, before using to pry parts.

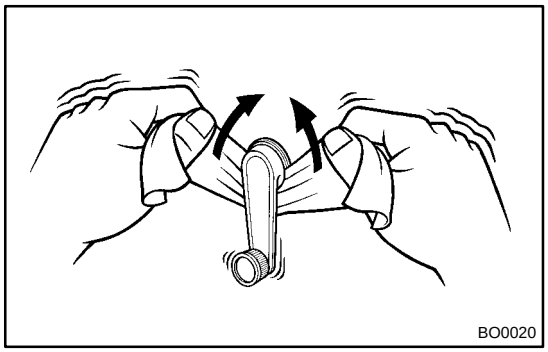

1. w/o Power window:
REMOVE REGULATOR HANDLE

Pull off the snap ring with a cloth and remove the regulator handle and plate.

HINT:

At the time of reassembly, install the plate and regulator handle with the snap ring when the window glass is fully closed.

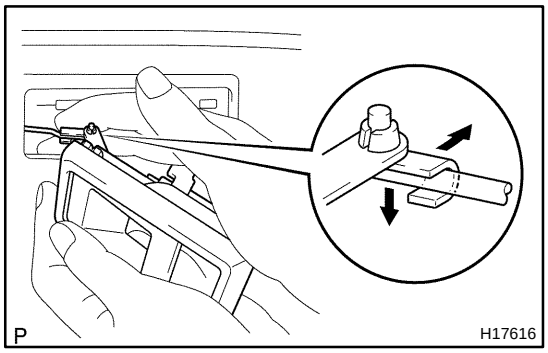

2. REMOVE DOOR INSIDE HANDLE

(a) Remove the screw and slide the handle forward.

(b) Disconnect the handle from the control link and remove the handle.

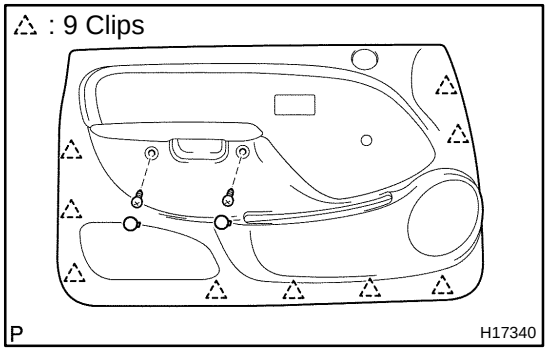

3. REMOVE DOOR TRIM

(a) Remove the 2 caps and 2 screws.

(b) Using a screwdriver, remove the door trim upward then disconnect the connectors.

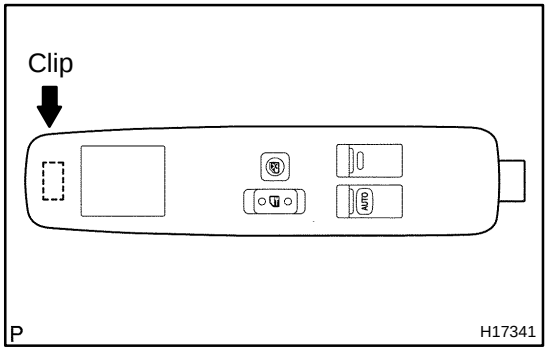

(c) w/ Power window:
Using a screwdriver, pry the forward of armrest panel and remove the panel.

(d) w/ Tweeter speaker:
Remove the 2 screws and tweeter speaker.

4. REMOVE FRONT SPEAKER

Disconnect the connector, remove the 5 screws and speaker.

5. REMOVE SERVICE HOLE COVER

Disconnect the wire harness and remove the 2 grommets and service hole cover.

HINT:
At the time of reassembly, bring out the link and connector through the service hole cover.

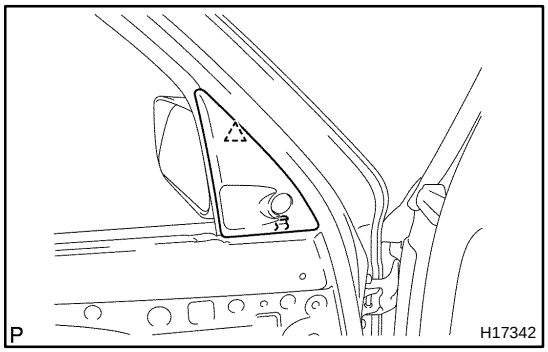

6. REMOVE OUTER REAR VIEW MIRROR

(a) w/ Remote control:
Remove the cover and disconnect the connector.

(b) w/o Remote control:
Remove the screw, lever and cover.

(c) Remove the 3 nuts and outer rear view mirror.

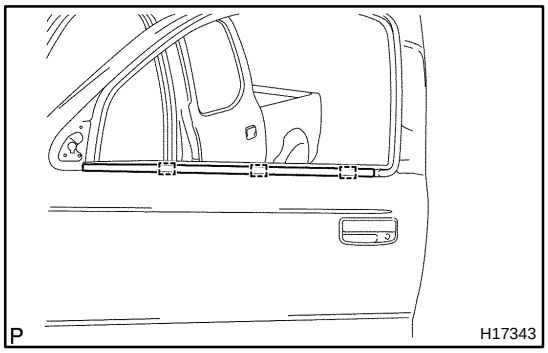

7. REMOVE OUTER WEATHERSTRIP

Using a screwdriver, remove the outer weatherstrip and 3 clips.

8. REMOVE GLASS RUN

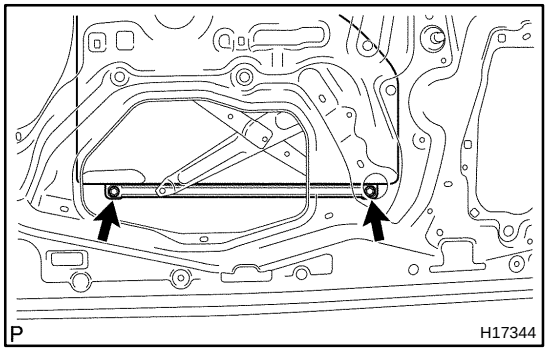

9. REMOVE DOOR GLASS

(a) Open the door glass until the 2 bolts of the window glass appear in the service hole.

(b) Remove the 2 bolts and door glass.
Torque: 5.0 N·m (50 kgf·cm, 43 in.·lbf)

10. REMOVE FRONT LOWER FRAME

(a) Remove the bolt, nut and front lower frame.

(b) Remove the lower glass run.

11. REMOVE REAR LOWER FRAME

(a) Remove the bolt, nut, and rear lower frame.

(b) Remove the lower glass run.

12. REMOVE WINDOW REGULATOR

(a) w/o Power window:
Remove the 5 bolts and regulator.
Torque: 5.0 N·m (50 kgf·cm, 43 in.·lbf)

(b) w/ Power window:
Disconnect the connector and remove the 6 bolts and window regulator.
Torque: 5.0 N·m (50 kgf·cm, 43 in.·lbf)

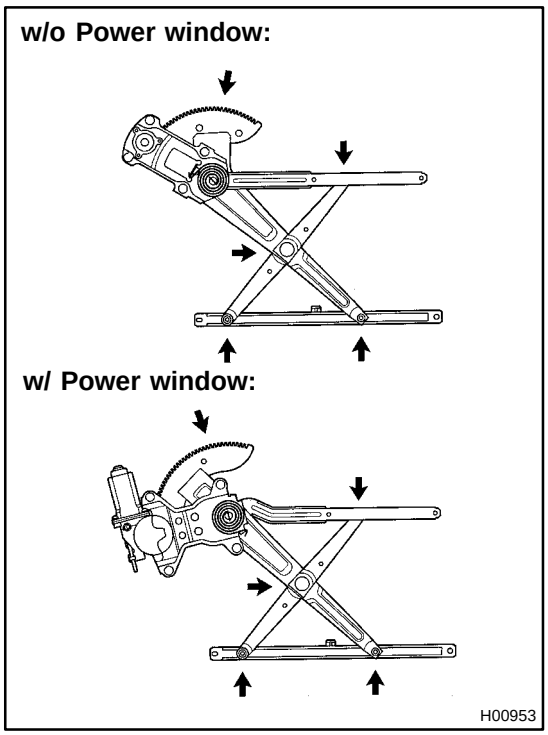

HINT:

At the time of reassembly, apply MP grease to the window regulator rollers.

NOTICE:

At the time of reassembly, do not apply grease to the spring of the window regulator.

13. REMOVE DOOR LOCK

(a) Disconnect the 2 links from the outside handle.

(b) w/ Power door lock:
Disconnect the connector.

(c) Remove the 3 screws and door lock.
Torque: 5.0 N·m (50 kgf·cm, 43 in.·lbf)

HINT:

At the time of reassembly, please refer to following items.

- Apply adhesive to the 3 screws.
Part No.08833–00070, THREE BOND 1324 or equivalent

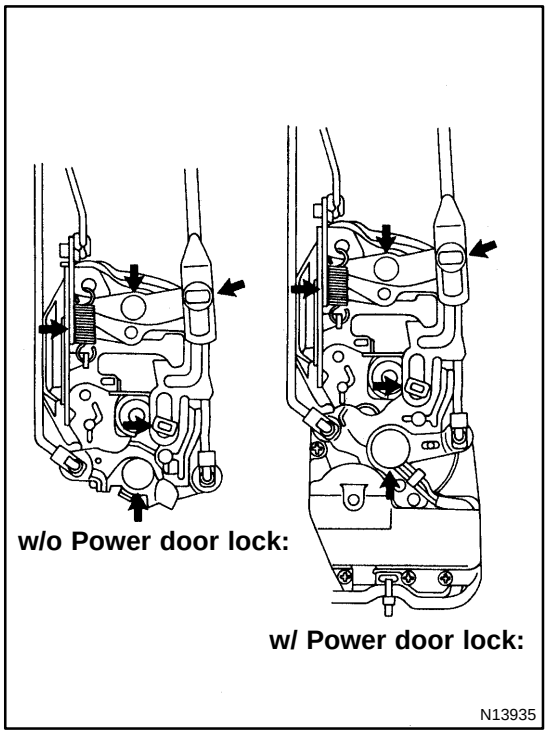

- Apply MP grease to the sliding and rotating parts of the door lock.

14. REMOVE OUTSIDE HANDLE

(a) Remove the 2 bolts.
Torque:5.0 N·m (50 kgf·cm, 43 in.·lbf)

(b) Remove the lock cylinder.

BO073–02

REASSEMBLY

Reassembly is in the reverse order of disassembly procedure (See page BO–14).

FRONT SEAT (Bench Type)

BO08J–02

COMPONENTS

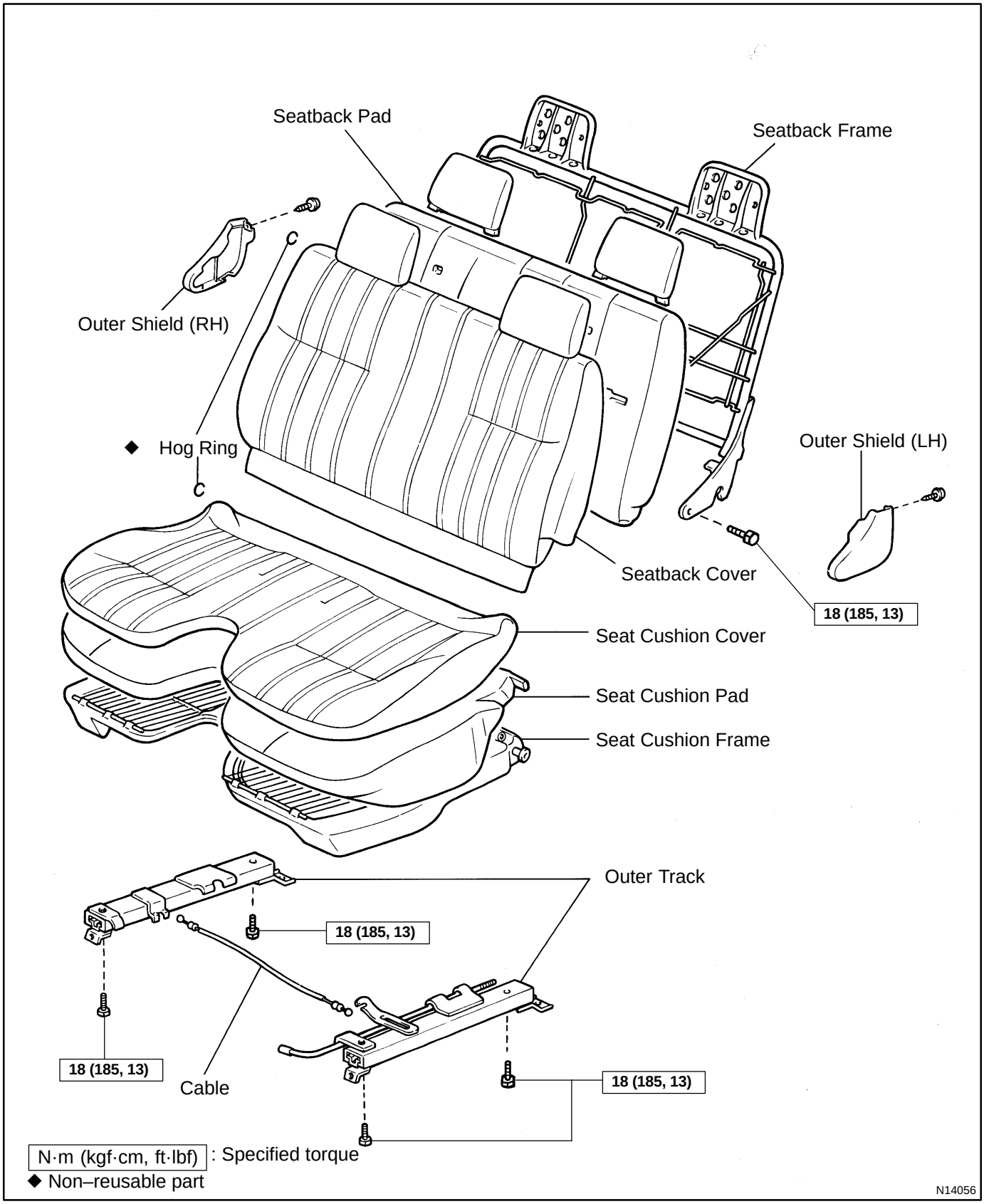

BO08L–02

DISASSEMBLY

1. REMOVE OUTER SHIELDS

Remove the 2 screws and outer shields.

2. REMOVE SEATBACK ASSEMBLY

Remove the 2 bolts and seatback assembly.

3. REMOVE SEATBACK COVER

(a) Remove the hog rings and seatback frame from the seatback cover with pad.

(b) Remove the hog rings and seatback cover from the seatback pad.

4. REMOVE OUTER TRACKS

(a) Remove the 4 bolts and outer tracks.

(b) Remove the cable from the outer tracks.

5. REMOVE SEAT CUSHION COVER

(a) Remove the hog rings and seat cushion frame from the seat cushion cover with pad.

(b) Remove the hog rings and cushion cover from the seat cushion pad.

BO08M–01

INSPECTION

INSPECT SLIDING LOCK POSITION SLIPPING OFF

When sliding the seat, inspect that the outer and inner tracks are locked at the same time.

HINT:

When sliding lock positions slip off, loosen the bolts to adjust the position.

BO08O–02

INSTALLATION

INSTALL FRONT SEAT

(a) Slide the front seat to the rearmost position.

NOTICE:

Make sure that seat adjuster locks.

(b) Without holding the seat track handle, mount the seat to the vehicle.

HINT:

If holding the seat track handle, the adjusted rearmost positions slip off.

(c) Tighten the bolts on the front side temporarily, from the bolt on the outer side tighten completely.
Torque: 37 N·m (375 kgf·cm, 27 ft·lbf)

(d) Slide the seat to the frontmost position to install the bolts on the rear side.
Torque: 37 N·m (375 kgf·cm, 27 ft·lbf)

BO08N–02

REASSEMBLY

1. INSTALL SEAT CUSHION COVER

(a) Install the seat cushion cover with new hog rings to the seat cushion pad.

HINT:

When installing the hog rings, take care to prevent wrinkles as little as possible.

(b) Install the seat cushion cover with pad and new hog rings to the seat cushion frame.

HINT:

When installing the hog rings, take care to prevent wrinkles as little as possible.

2. INSTALL OUTER TRACKS

(a) Slide the outer tracks to the frontmost position.

(b) Install the cable to the outer tracks.

(c) Install the outer tracks with the 4 bolts to the seat cushion assembly.

Torque: 18 N·m (185 kgf·cm, 13 ft·lbf)

3. INSTALL SEATBACK COVER

(a) Install the seatback cover with new hog rings to the seatback pad.

HINT:

When installing the hog rings, take care to prevent wrinkles as little as possible.

(b) Install the seatback frame with new hog rings to the seatback cover with pad.

HINT:

When installing the hog rings, take care to prevent wrinkles as little as possible.

4. INSTALL SEATBACK ASSEMBLY

Install the seatback assembly with the 4 bolts.

Torque: 18 N·m (185 kgf·cm, 13 ft·lbf)

5. INSTALL OUTER SHIELDS

Install the outer shields with the 2 screws.

BO08K–01

REMOVAL

REMOVE FRONT SEAT

Remove the 4 bolts and front seat.

NOTICE:

Be careful not to damage the body.

FRONT SEAT (Split Bench Type)

BO08P–03

COMPONENTS

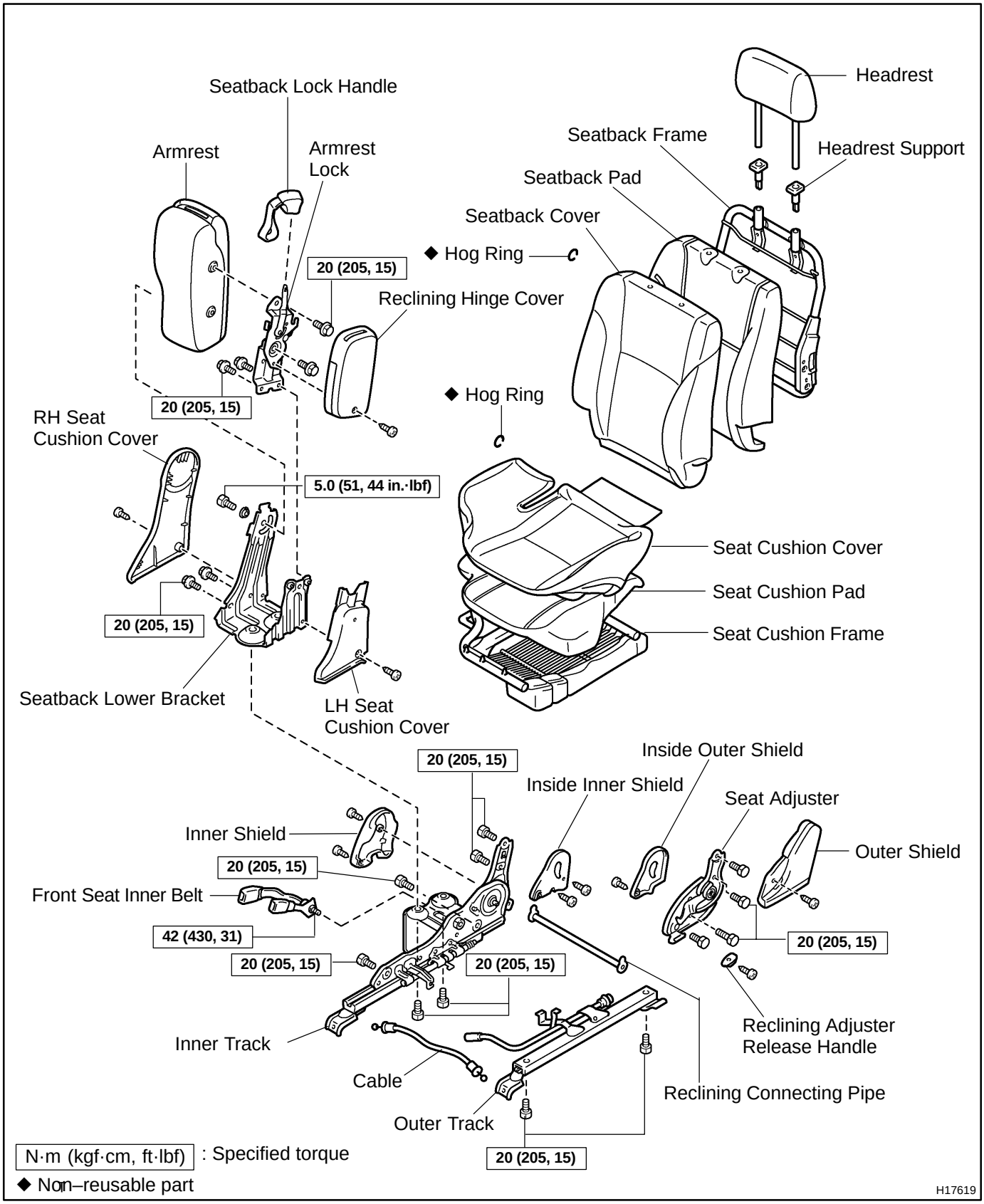

BO08R–03

DISASSEMBLY

1. REMOVE HEADREST

2. REMOVE ARMREST ASSEMBLY

(a) Remove the screw and RH seat cushion cover.

(b) Remove the 4 bolts and armrest assembly.

3. REMOVE RECLINING ADJUSTER RELEASE HANDLE

4. REMOVE OUTER SHIELD

Remove the screw and outer shield.

5. REMOVE INNER SHIELD

Remove the screw and inner shield.

6. REMOVE SEATBACK ASSEMBLY

(a) Remove the hog rings.

(b) Remove the 4 bolts and seatback assembly.

7. REMOVE SEATBACK COVER

(a) Remove the headrest supports.

(b) Remove the seatback frame from the seatback cover with pad.

(c) Remove the hog rings and seatback cover from the seatback pad.

8. REMOVE SEAT CUSHION ASSEMBLY

Remove the 4 bolts and seat cushion assembly.

9. REMOVE SEAT CUSHION COVER

(a) Remove the hog rings and seat cushion frame from the seat cushion cover with pad.

(b) Remove the hog rings and seat cushion cover from the seat cushion pad.

10. REMOVE RECLINING CONNECTING PIPE

Remove the reclining connecting pipe from the seat tracks.

11. REMOVE INSIDE INNER SHIELD

Remove the screw and inside inner shield.

12. REMOVE INSIDE OUTER SHIELD

Remove the screw and inside outer shield.

13. REMOVE CABLE

14. REMOVE SEAT ADJUSTER

Remove the 2 bolts and seat adjuster.

15. REMOVE FRONT SEAT INNER BELT

Unfasten the bolt and remove the front seat inner belt.

BO08S–01

INSPECTION

INSPECT RECLINING LOCK POSITION AND SLIDING LOCK POSITION SLIPPING OFF

(a) When reclining the seat, inspect that the outer and inner tracks are released at the same time.

HINT:

When the reclining lock positions slip off, disassemble the seat to adjust the position.

(b) When sliding the seat, inspect that the outer and inner tracks are locked at the same time.

HINT:

When sliding lock positions slip off, loosen the bolts to adjust the position.

BO08U–02

INSTALLATION

INSTALL FRONT SEAT

(a) Slide the front seat to the rearmost position.

NOTICE:

Make sure that seat adjuster locks.

(b) Without holding the seat track handle, mount the seat to the vehicle.

HINT:

If holding the seat track handle, the adjusted rearmost positions slip off.

(c) Tighten the bolts on the front side temporarily, from the bolt on the outer side tighten completely.
Torque: 37 N·m (375 kgf·cm, 27 ft·lbf)

(d) Slide the seat to the frontmost position to install the bolts on the rear side.
Torque: 37 N·m (375 kgf·cm, 27 ft·lbf)

(e) Install the 2 seat track covers.

REASSEMBLY

1. INSTALL FRONT SEAT INNER BELT

Install the front seat inner belt with the nut to the inner track.

Torque: 42 N·m (430 kgf·cm, 31 ft·lbf)

2. INSTALL SEAT ADJUSTER

Install the seat adjuster with the 2 bolts.

Torque: 20 N·m (205 kgf·cm, 15 ft·lbf)

3. INSTALL CABLE

4. INSTALL INSIDE OUTER SHIELD

Install the inside outer shield with the screw.

5. INSTALL INSIDE INNER SHIELD

Install the inside inner shield withe the screw.

6. INSTALL RECLINING CONNECTING PIPE

(a) Adjust the reclining lock positions of the seat tracks.

(b) Slide the seat track to the most front position.

(c) Place the seat track on a spacer to adjust the seat rails in parallel and install the connecting pipe.

HINT:

When installing the connecting pipe while raising up the seat tracks, the lock positions adjusted in 6–(a) step slip off then lock error will occur.

7. INSTALL SEATBACK COVER

(a) Install the seatback cover with new hog rings to the seatback pad.

HINT:

When installing the hog rings, take care to prevent wrinkles as little as possible.

(b) Install the seatback cover with pad to the seatback frame.

(c) Install the headrest supports.

8. INSTALL SEATBACK ASSEMBLY

(a) Install the seatback assembly with 4 bolts.

Torque: 20 N·m (205 kgf·cm, 15 ft·lbf)

HINT:

Tighten the 4 bolts temporarily, then from the bolt on the front right side tighten completely.

(b) Install new hog rings.

HINT:

When installing the hog rings, take care to prevent wrinkles as little as possible.

9. INSTALL SEAT CUSHION COVER

(a) Install the seat cushion cover with new hog rings to the seat cushion pad.

HINT:

When installing the hog rings, take care to prevent wrinkles as little as possible.

(b) Install the seat cushion cover with pad and new hog rings to the seat cushion frame.

HINT:

When installing the hog rings, take care to prevent wrinkles as little as possible.

10. INSTALL SEAT CUSHION ASSEMBLY

Install the seat cushion assembly with 4 bolts to the seat track.

Torque: 20 N·m (205 kgf·cm, 15 ft·lbf)

HINT:

Tighten the 4 bolts temporarily, then from the bolts on the rear side tighten completely.

11. INSTALL INNER SHIELD

Install the inner shield with the screw.

12. INSTALL OUTER SHIELD

Install the inner outer shield with the screw.

13. INSTALL RECLINING ADJUSTER RELEASE HANDLE

14. INSTALL ARMREST ASSEMBLY

(a) Install the armrest assembly with the 4 bolts.
Torque: 20 N·m (205 kgf·cm, 15 ft·lbf)

(b) Install the RH seat cushion cover with the screw.

15. INSTALL HEADREST

BO08Q–01

REMOVAL

REMOVE FRONT SEAT

(a) Using a screwdriver, remove the 2 seat track covers.

HINT:

Tape the screwdriver tip before use.

(b) Remove the 4 bolts and front seat.

NOTICE:

Be careful not to damage the body.

FRONT SEAT (Separate Type)

BO087–02

COMPONENTS

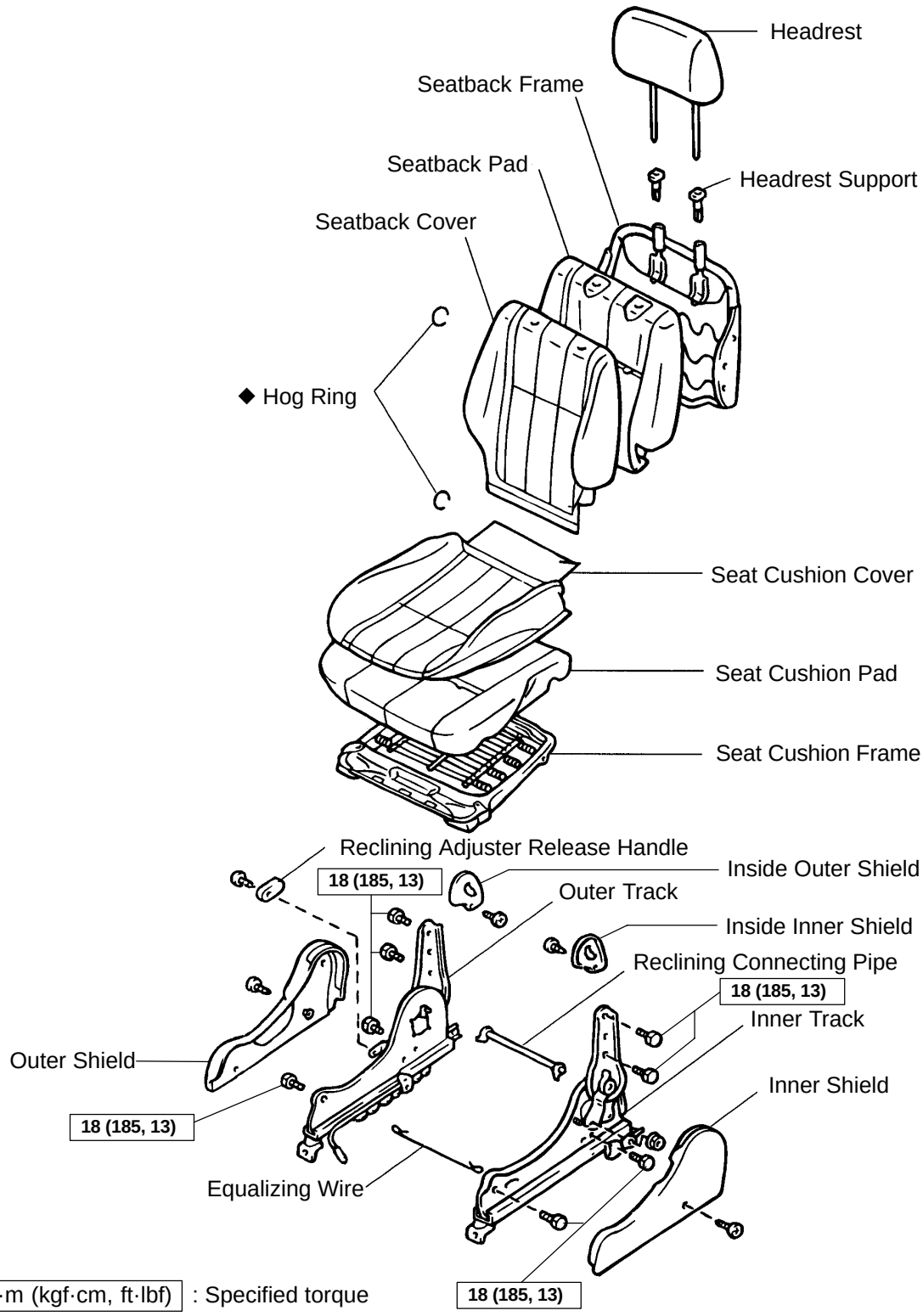

N·m (kgf·cm, ft·lbf) : Specified torque

◆ Non–reusable part

H02318

BO089–02

DISASSEMBLY

1. REMOVE HEADREST

2. REMOVE RECLINING ADJUSTER RELEASE HANDLE

3. REMOVE OUTER SHIELD

Remove the screw and outer shield.

4. REMOVE INNER SHIELD

Remove the screw and inner shield.

5. REMOVE SEATBACK ASSEMBLY

(a) Remove the hog rings.

(b) Remove the 4 bolts and seatback assembly.

6. REMOVE SEATBACK COVER

(a) Remove the headrest supports.

(b) Remove the seatback frame from the seatback cover with pad.

(c) Remove the hog rings and seatback cover from the seatback pad.

7. REMOVE SEAT CUSHION ASSEMBLY

Remove the 4 bolts and seat cushion assembly.

8. REMOVE SEAT CUSHION COVER

(a) Remove the hog rings and seat cushion frame from the seat cushion cover with pad.

(b) Remove the hog rings and seat cushion cover from the seat cushion pad.

9. REMOVE RECLINING CONNECTING PIPE

Remove the reclining connecting pipe from the seat tracks.

10. REMOVE INSIDE INNER SHIELD

Remove the screw and inside inner shield.

11. REMOVE INSIDE OUTER SHIELD

Remove the screw and inside outer shield.

12. REMOVE EQUALIZING WIRE

BO08A–01

INSPECTION

INSPECT RECLINING LOCK POSITION AND SLIDING LOCK POSITION SLIPPING OFF

(a) When reclining the seat, inspect that the outer and inner tracks are released at the same time.

HINT:

When the reclining lock positions slip off, disassemble the seat to adjust the position.

(b) When sliding the seat, inspect that the outer and inner tracks are locked at the same time.

HINT:

When sliding lock positions slip off, loosen the bolts to adjust the position.

BO08C–02

INSTALLATION

INSTALL FRONT SEAT

(a) Slide the front seat to the rearmost position.

NOTICE:

Make sure that seat adjuster locks.

(b) Without holding the seat track handle, mount the seat to the vehicle.

HINT:

If holding the seat track handle, the adjusted rearmost positions slip off.

(c) Tighten the bolts on the front side temporarily, from the bolt on the outer side tighten completely.
Torque: 37 N·m (375 kgf·cm, 27 ft·lbf)

(d) Slide the seat to the frontmost position to install the bolts on the rear side.
Torque: 37 N·m (375 kgf·cm, 27 ft·lbf)

(e) Install the 2 seat track covers.

BO08B–02

REASSEMBLY

1. INSTALL EQUALIZING WIRE

2. INSTALL INSIDE OUTER SHIELD

Install the inside outer shield with the screw.

3. INSTALL INSIDE INNER SHIELD

Install the inside inner shield withe the screw.

4. INSTALL RECLINING CONNECTING PIPE

(a) Adjust the reclining lock positions of the seat tracks.

(b) Slide the seat track to the most front position.

(c) Place the seat track on a spacer to adjust the seat rails in parallel and install the connecting pipe.

HINT:

When installing the connecting pipe while raising up the seat tracks, the lock positions adjusted in 4–(a) step slip off then lock error will occur.

5. INSTALL SEATBACK COVER

(a) Install the seatback cover with new hog rings to the seatback pad.

HINT:

When installing the hog rings, take care to prevent wrinkles as little as possible.

(b) Install the seatback cover with pad to the seatback frame.

(c) Install the headrest supports.

6. INSTALL SEATBACK ASSEMBLY

Install the seatback assembly with 4 bolts.

Torque: 18 N·m (185 kgf·cm, 13 ft·lbf)

HINT:

Tighten the 4 bolts temporarily, then from the bolt on the front right side tighten completely.

7. INSTALL SEAT CUSHION COVER

(a) Install the seat cushion cover with new hog rings to the seat cushion pad.

HINT:

When installing the hog rings, take care to prevent wrinkles as little as possible.

(b) Install the seat cushion cover with pad to the seat cushion frame.

8. INSTALL SEAT CUSHION ASSEMBLY

Install the seat cushion assembly with 4 bolts to the seat track.

Torque: 18 N·m (185 kgf·cm, 13 ft·lbf)

HINT:

Tighten the 4 bolts temporarily, then from the bolts on the rear side tighten completely.

9. INSTALL INNER SHIELD

Install the inner shield with the screw.

10. INSTALL OUTER SHIELD

Install the outer shield with the screw.

11. INSTALL RECLINING ADJUSTER RELEASE HANDLE

12. INSTALL HEADREST

BO088–01

REMOVAL

REMOVE FRONT SEAT

(a) Using a screwdriver, remove the 2 seat track covers.

HINT:

Tape the screwdriver tip before use.

(b) Remove the 4 bolts and front seat.

NOTICE:

Be careful not to damage the body.

FRONT SEAT (Sports Type)

BO08D–03

COMPONENTS

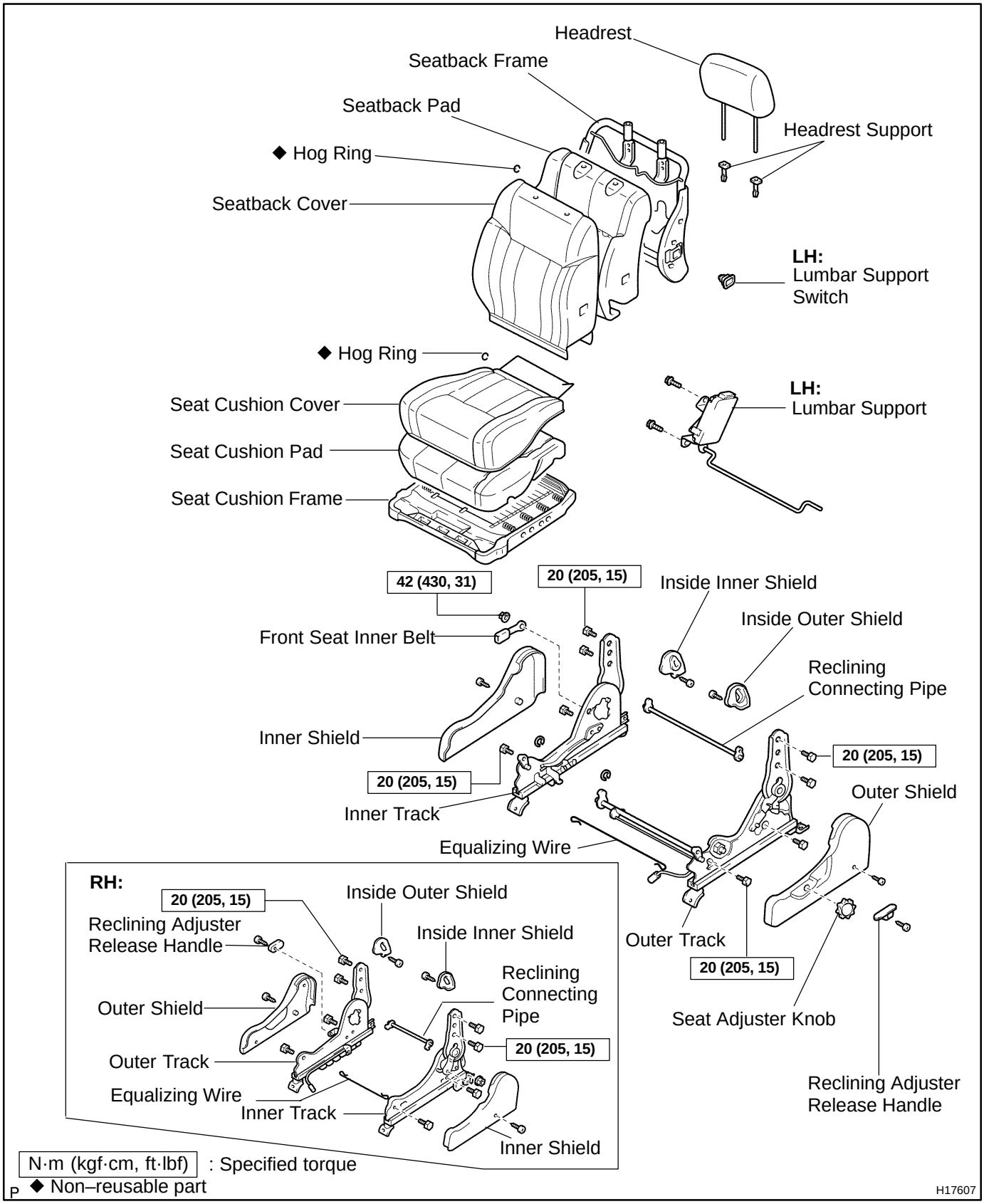

BO08F–03

DISASSEMBLY

1. REMOVE FRONT SEAT

(a) Using a screwdriver, remove the 2 seat track covers.

HINT:

Tape the screwdriver tip before use.

(b) Remove the 4 bolts and front seat.

NOTICE:

Be careful not to damage the body.

2. REMOVE HEADREST

3. REMOVE RECLINING ADJUSTER RELEASE HANDLE

4. REMOVE SEAT ADJUSTER KNOB

5. REMOVE OUTER SHIELD

Remove the screw and outer shield.

6. REMOVE INNER SHIELD

Remove the screw and inner shield.

7. REMOVE SEAT CUSHION ASSEMBLY

Remove the 4 bolts and seat cushion assembly.

8. REMOVE SEAT CUSHION COVER

(a) Remove the seat cushion frame from the seat cushion cover with pad.

(b) Remove the hog rings and seat cushion cover from the seat cushion pad.

9. REMOVE SEATBACK ASSEMBLY

(a) Remove the hog rings.

(b) Disconnect the connector.

(c) Remove the 4 bolts and seatback assembly.

10. REMOVE SEATBACK COVER

(a) Remove the headrest supports.

(b) Driver's seat:

Disconnect the connector and remove the lumber support switch.

(c) Remove the seatback frame from the seatback cover with pad.

(d) Driver's seat:

Remove the 2 screws, lumber support.

(e) Remove the hog rings and seatback cover from the seatback pad.

11. REMOVE RECLINING CONNECTING PIPE

Remove the reclining connecting pipe from the seat tracks.

12. REMOVE INSIDE INNER SHIELD

Remove the screw and inside inner shield.

13. REMOVE INSIDE OUTER SHIELD

Remove the screw and inside outer shield.

14. REMOVE EQUALIZING WIRE

15. REMOVE FRONT SEAT INNER BELT

Remove the nut and front seat inner belt.

BO08H–03

REASSEMBLY

1. INSTALL FRONT SEAT INNER BELT

Install the front seat inner belt with the nut to the inner track.

Torque: 42 N·m (430 kgf·cm, 31 ft·lbf)

2. INSTALL EQUALIZING WIRE

3. INSTALL INSIDE OUTER SHIELD

Install the inside outer shield with the screw.

4. INSTALL INSIDE INNER SHIELD

Install the inside inner shield withe the screw.

5. INSTALL RECLINING CONNECTING PIPE

(a) Adjust the reclining lock positions of the seat tracks.

(b) Slide the seat track to the most front position.

(c) Place the seat track on a spacer to adjust the seat rails in parallel and install the connecting pipe.

HINT:

When installing the connecting pipe while raising up the seat tracks, the lock positions adjusted in 5–(a) step slip off then lock error will occur.

6. INSTALL SEATBACK COVER

(a) Install the seatback cover with new hog rings to the seatback pad.

HINT:

When installing the hog rings, take care to prevent winkles as little as possible.

(b) Driver's seat:
Install the lumber support with the 2 screws.

(c) Install the seatback cover with pad to the seatback frame.

(d) Driver's seat:
Install the lumber support switch and connect the connector.

(e) Install the headrest support.

7. INSTALL SEATBACK ASSEMBLY

Install the seat back assembly with 4 bolts.

Torque: 20 N·m (205 kgf·cm, 15 ft·lbf)

HINT:

Tighten the 4 bolts temporarily, then from the bolt on the front right side tighten completely.

8. INSTALL SEAT CUSHION COVER

(a) Install the seat cushion cover with new hog rings to the seat cushion pad.

HINT:

When installing the hog rings, take care to prevent winkles as little as possible.

(b) Install the seat cushion cover with pad to the seat cushion frame.

9. INSTALL SEAT CUSHION ASSEMBLY

Install the seat cushion assembly with 4 bolts to the seat track.

Torque: 20 N·m (205 kgf·cm, 15 ft·lbf)

HINT:

Tighten the 4 bolts temporarily, then from the bolts on the rear side tighten completely.

10. INSTALL INNER SHIELD

Install the inner shield with the screw.

11. INSTALL OUTER SHIELD

Install the outer shield with the screw.

12. INSTALL SEAT ADJUSTER KNOB

13. INSTALL RECLINING ADJUSTER RELEASE HANDLE

14. INSTALL HEADREST

15. INSPECT RECLINING LOCK POSITION AND SLIDING LOCK POSITION SLIPPING OFF

(a) When reclining the seat, inspect that the outer and inner tracks are released at the same time.

HINT:

When the reclining lock positions slip off, disassemble the seat to adjust the position.

(b) When sliding the seat, inspect that the outer and inner tracks are locked at the same time.

HINT:

When sliding lock positions slip off, loosen the bolts to adjust the position.

16. INSTALL FRONT SEAT

(a) Slide the front seat to the rearmost position.

NOTICE:

Make sure that seat adjuster locks.

(b) Without holding the seat track handle, mount the seat to the vehicle.

HINT:

If holding the seat track handle, the adjusted rearmost positions slip off.

(c) Tighten the bolts on the front side temporarily, from the bolt on the outer side tighten completely.
Torque: 37 N·m (375 kgf·cm, 27 ft·lbf)

(d) Slide the seat to the frontmost position to install the bolts on the rear side.
Torque: 37 N·m (375 kgf·cm, 27 ft·lbf)

(e) Install the 2 seat track covers.

FRONT WIPER AND WASHER

COMPONENTS

BO074–03

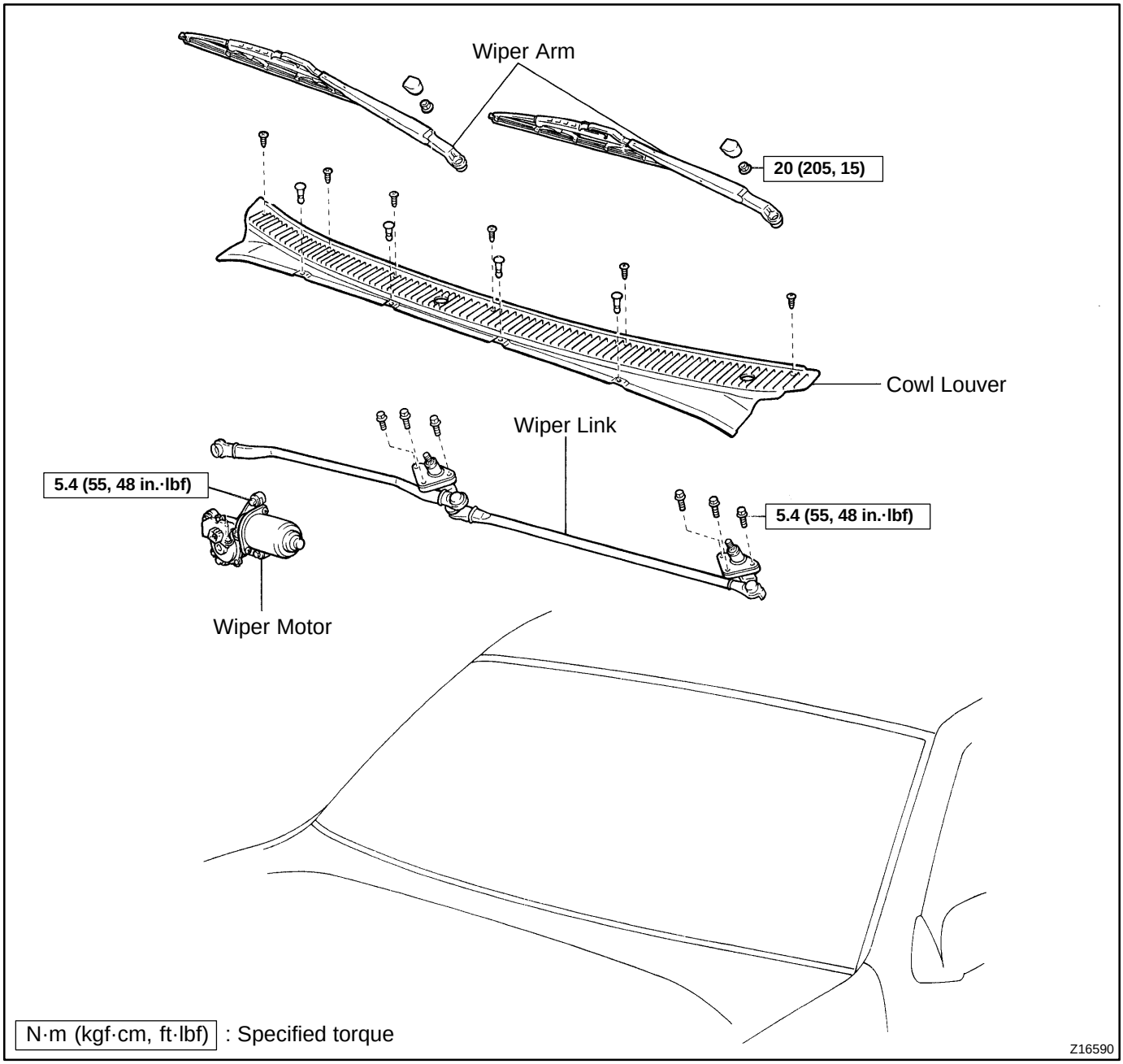

BO42B–01

INSPECTION

1. INSPECT WASHER NOZZLE

While operating the washer, check that the point where the washer fluid hits the windshield and the surge area are within the range indicated by the hatched line.

2 nozzle type (Reference):

A	Approx. 156.0 mm (6.14 in.)
B	Approx. 287.7 mm (11.32 in.)
C	Approx. 238.6 mm (9.39 in.)
D	Approx. 102.5 mm (4.03 in.)
E	Approx. 162.0 mm (6.37 in.)
F	Approx. 211.4 mm (8.32 in.)
G	Approx. 156.0 mm (6.14 in.)
H	Approx. 0 – 50 mm (0 – 1.97 in.)

3 nozzle type (Reference):

a	Approx. 163.3 mm (6.43 in.)
b	Approx. 282.2 mm (11.11 in.)
c	Approx. 246.9 mm (9.72 in.)
d	Approx. 386.9 mm (15.23 in.)
e	Approx. 211.3 mm (8.31 in.)
f	Approx. 186.7 mm (7.35 in.)
g	Approx. 221.5 mm (8.72 in.)
h	Approx. 184.4 mm (7.26 in.)
i	Approx. 169.8 mm (6.69 in.)
j	Approx. 282.2 mm (11.11 in.)
k	Approx. 234.4 mm (9.23 in.)
l	Approx. 383.6 mm (15.10 in.)

2 Nozzle Type:

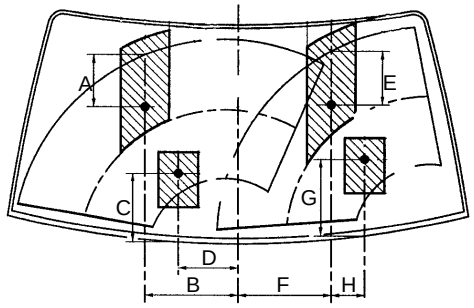

3 Nozzle Type:

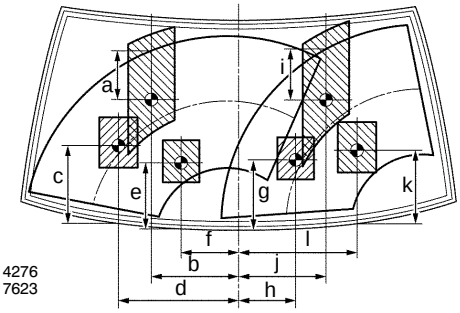

N14276
H17623
P

H17650

2. ADJUST WASHER NOZZLE

Using a tool like the one shown in the figure, change the direction of the nozzle hole to adjust the point where washer fluid hits the windshield.

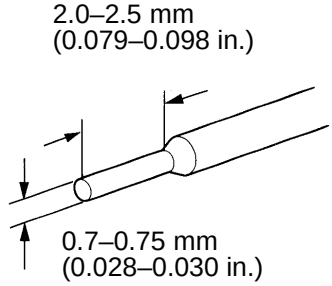

BE3367

BO256–02

INSTALLATION

1. INSTALL WINDOW WASHER NOZZLES

(a) Connect the washer hose.

(b) Install the washer nozzles to the hood.

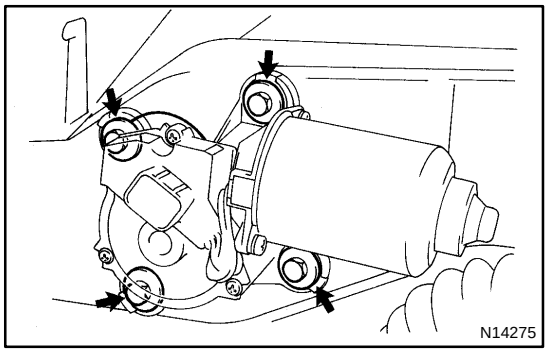

2. INSTALL WIPER MOTOR

Install the wiper motor and fasten the 4 bolts, then connect the connector.

Torque: 5.4 N·m (55 kgf·cm, 48 in.·lbf)

3. INSTALL WIPER LINK

(a) Connect the wiper link to the wiper motor.

(b) Install the 6 bolts.

Torque: 5.4 N·m (55 kgf·cm, 48 in.·lbf)

4. INSTALL COWL LOUVER

Install the cowl louver with the 6 screws and 4 clips.

5. INSTALL WIPER ARMS

(a) Operate the wipers once and turn the wiper switch OFF.

(b) Install the wiper arms and tighten nuts by hand.

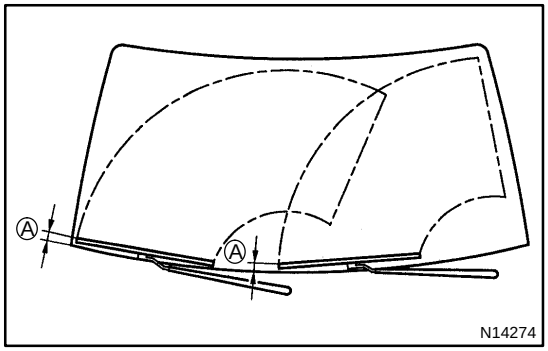

(c) Adjust the installation position of the wiper arms to the positions as shown in the illustration.

A: 25.0 mm (0.984 in.)

(d) Torque the nuts.

Torque: 20 N·m (205 kgf·cm, 15 ft·lbf)

BO075–03

REMOVAL

1. REMOVE WIPER ARMS

(a) Using a screwdriver, remove the caps.

HINT:

Tape the screwdriver tip before use.

(b) Remove the 2 nuts and wiper arms.

2. REMOVE COWL LOUVER

Remove the 6 screws, 4 clips and cowl louver.

3. REMOVE WIPER LINK

(a) Remove the 6 bolts.

(b) Disconnect the wiper link from the wiper motor.

(c) Remove the wiper link through the service hole.

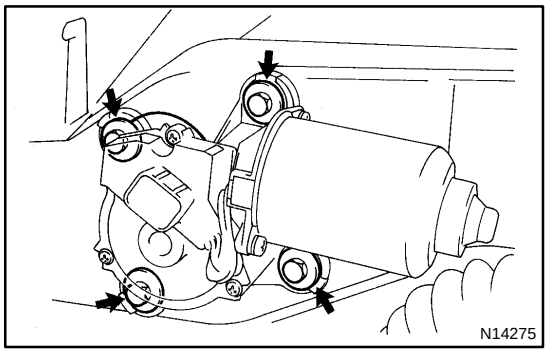

4. REMOVE WIPER MOTOR

Disconnect the connector, then unfasten the 4 bolts and remove the motor.

5. REMOVE WINDOW WASHER NOZZLES

(a) Using a screwdriver, remove the window washer nozzles from the hood.

HINT:

Tape the screwdriver tip before use.

(b) Disconnect the washer hoses.

HEADLIGHT

COMPONENTS

BO422–01

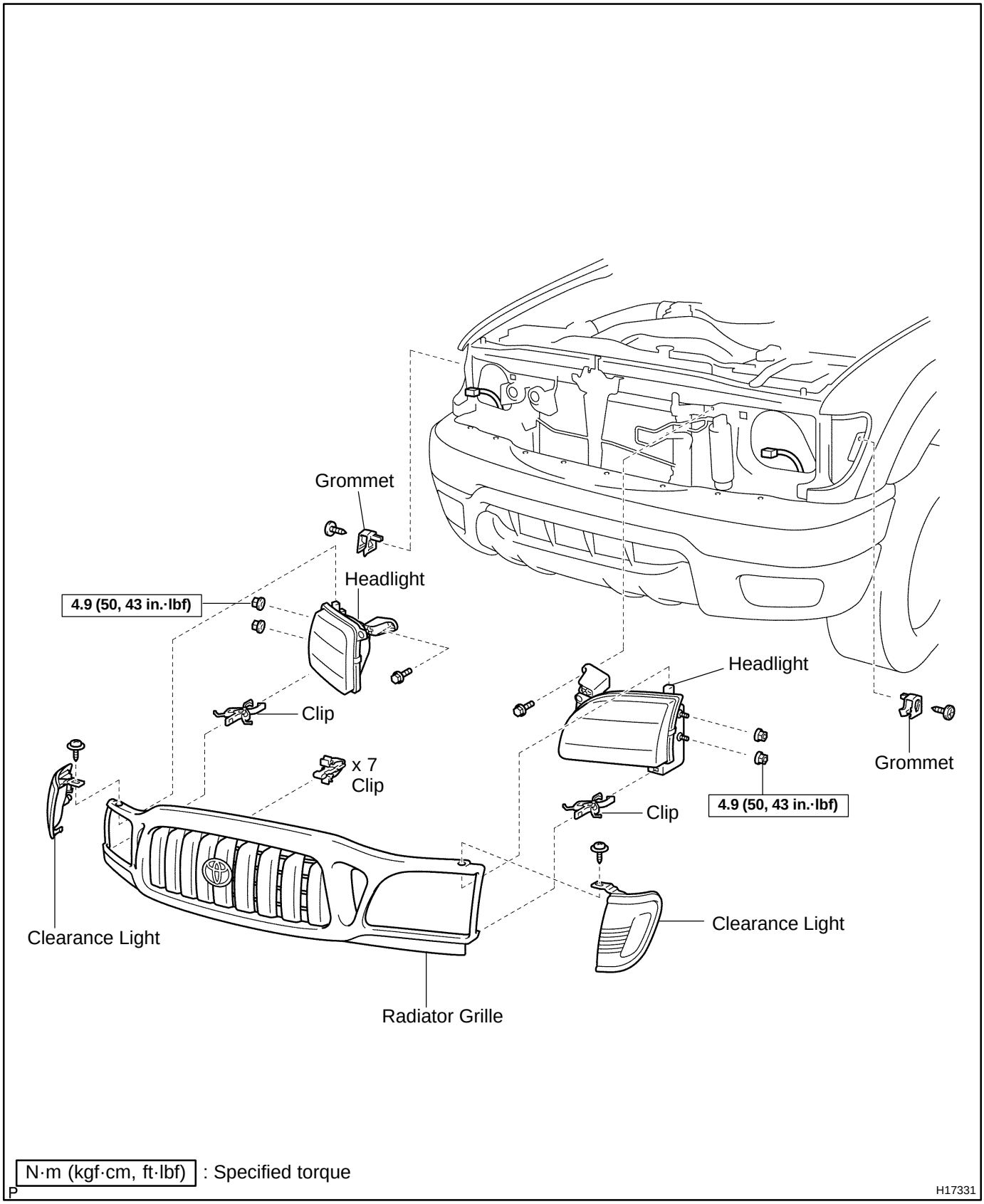

BO424–01

INSTALLATION

Installation is in the reverse order of removal procedure (See page BO–8).

BO423–01

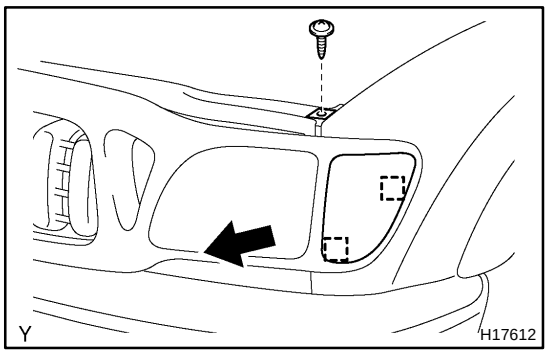

REMOVAL

1. REMOVE CLEARANCE LIGHTS

Remove the screw and clearance light forward, disconnect the connector.

NOTICE:

Be careful not to break the clearance light when removing it forward.

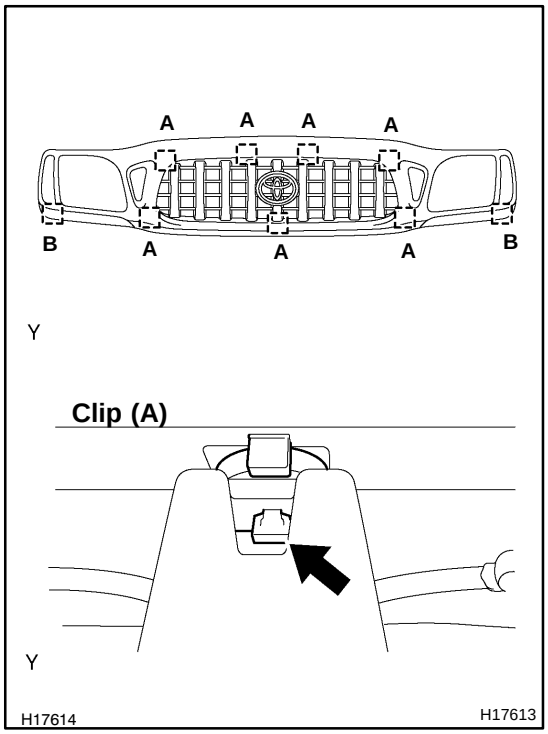

2. REMOVE RADIATOR GRILLE

(a) Using a screwdriver, push the 7 clips (A) downward as shown in the illustration.

(b) Using long nose pliers, disconnect the 2 clips (B)

(c) Remove the radiator grille and 9 clips

3. REMOVE HEADLIGHTS

Disconnect the connector, remove the bolt, 2 nuts and headlight.

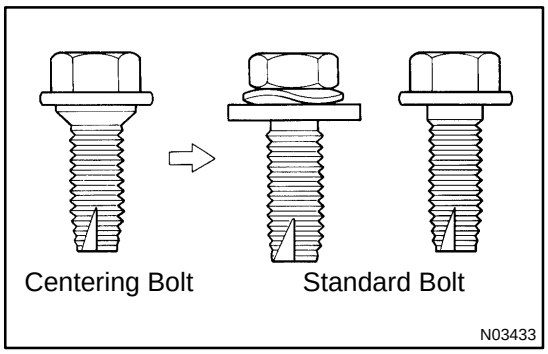

HOOD

ADJUSTMENT

BO06Z–03

HINT:

Since the centering bolt is used as the hood hinge set bolt, the hood cannot be adjusted with it on. Substitute the bolt with the washer for the centering bolt.

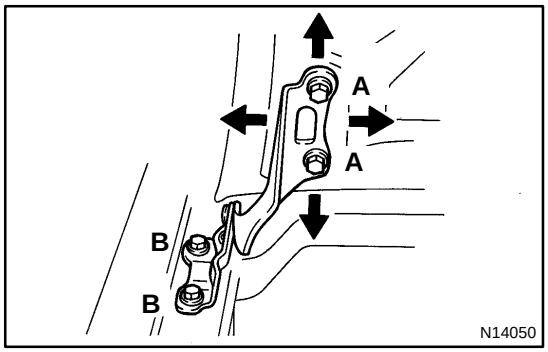

1. ADJUST HOOD IN FORWARD/ REARWARD AND LEFT/ RIGHT DIRECTIONS

Adjust the hood by loosening the hood side hinge bolts.

Torque:
13 N·m (130 kgf·cm, 10 ft·lbf) for A
18 N·m (180 kgf·cm, 13 ft·lbf) for B

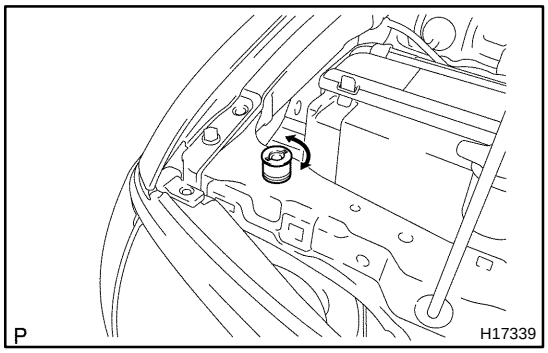

2. ADJUST FRONT EDGE OF HOOD IN VERTICAL DIRECTION

Adjust the hood by turning the cushions.

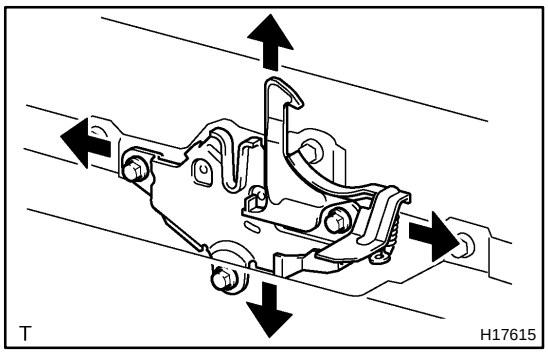

3. ADJUST HOOD LOCK

Adjust the lock by loosening the 3 bolts.

Torque: 8.0 N·m (82 kgf·cm, 71 in.·lbf)

INSTRUMENT PANEL

COMPONENTS

BO07T–03

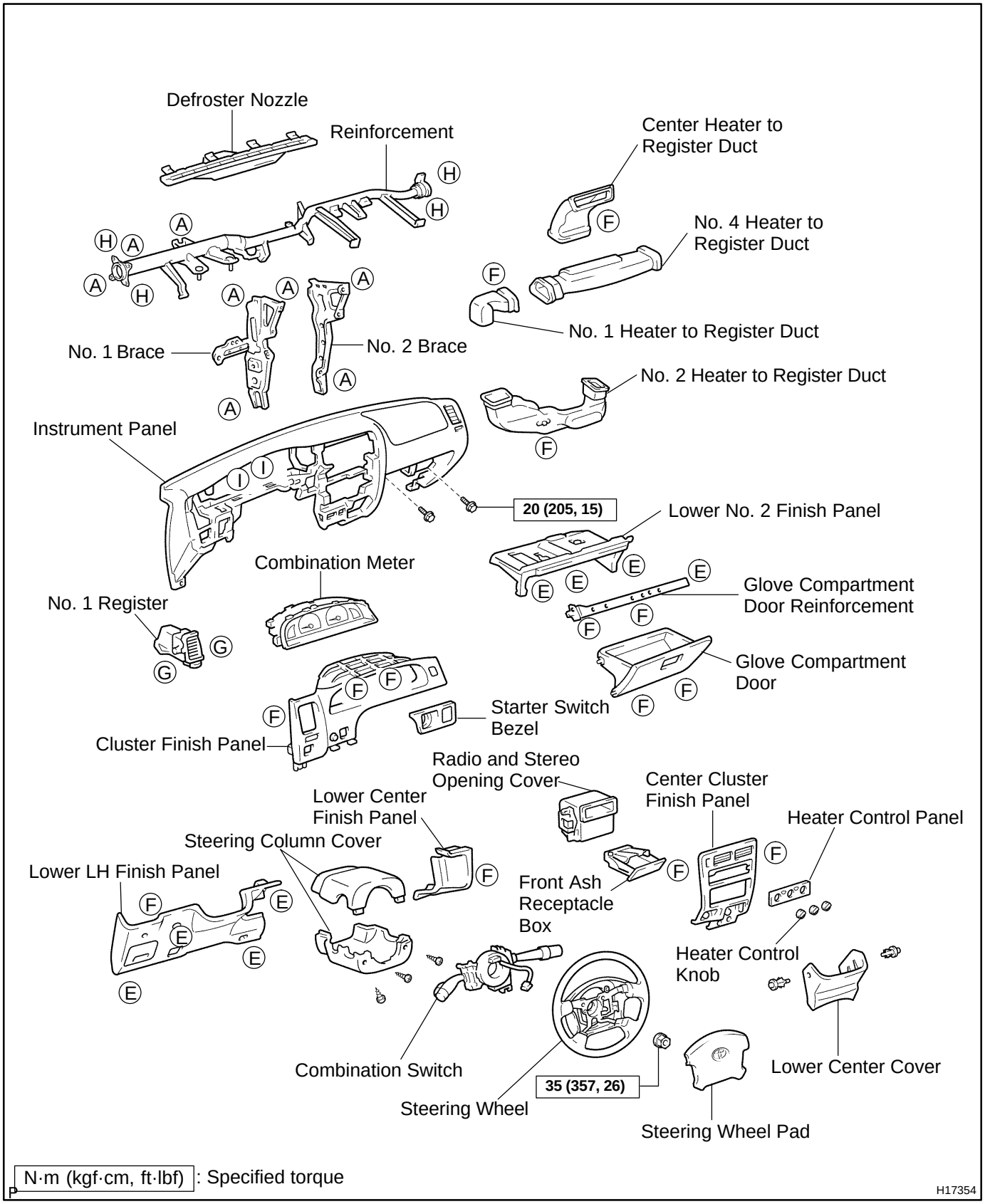

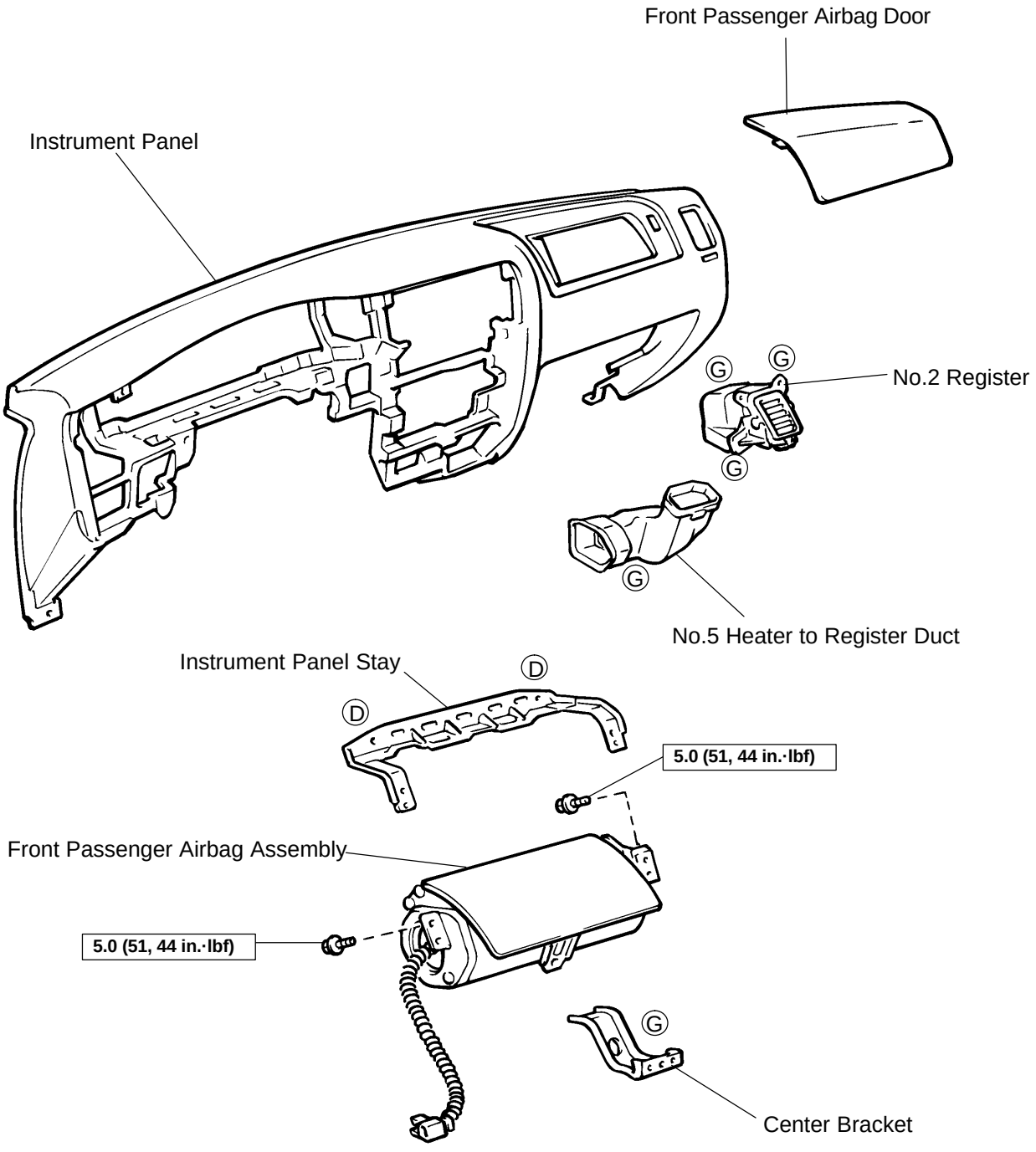

N·m (kgf·cm, ft·lbf) : Specified torque

H01595

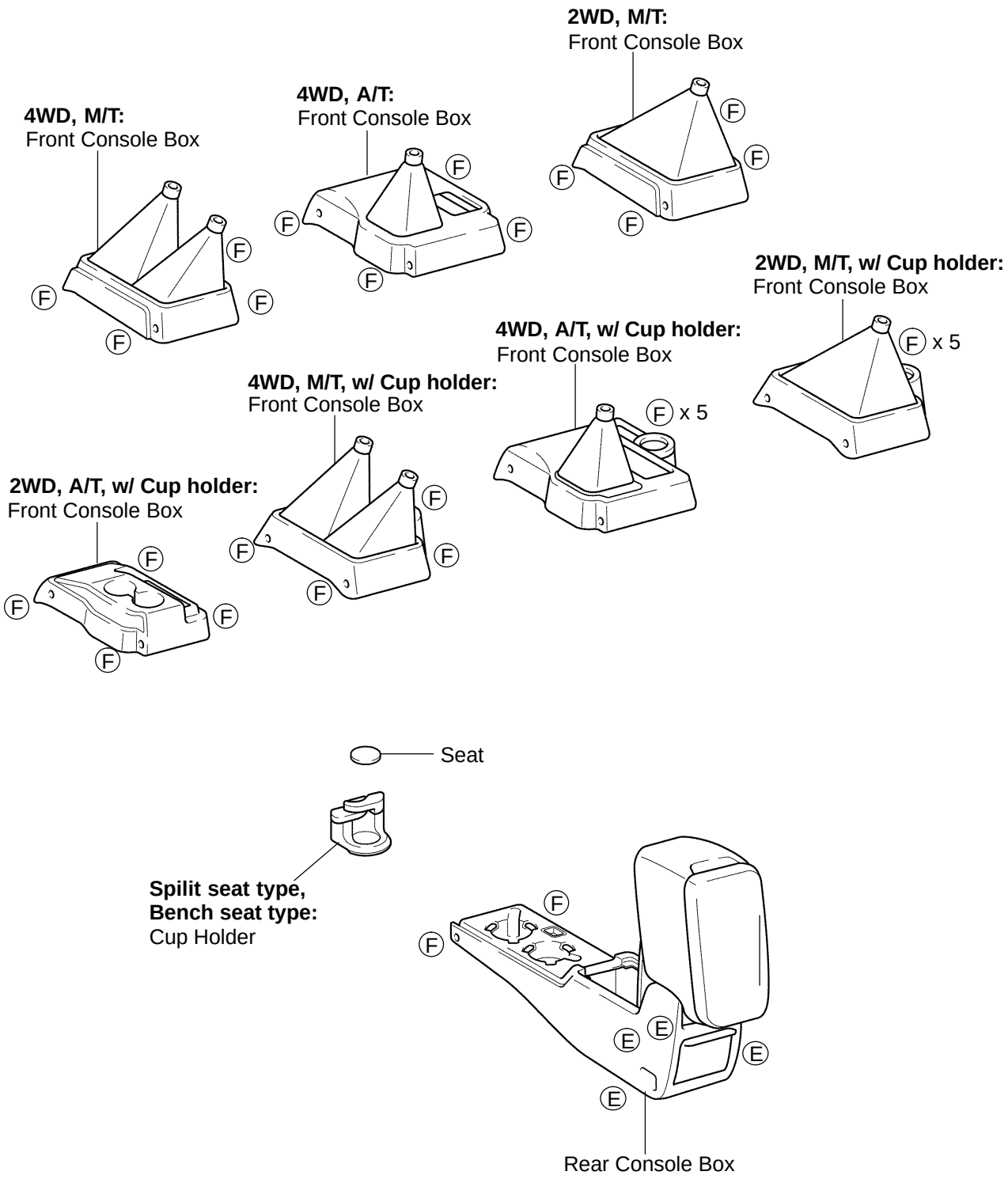
2WD, M/T:
Front Console Box
4WD, A/T:
Front Console Box
4WD, M/T:
Front Console Box
2WD, M/T, w/ Cup holder:
Front Console Box
x 5
4WD, A/T, w/ Cup holder:
Front Console Box
x 5
4WD, M/T, w/ Cup holder:
Front Console Box
2WD, A/T, w/ Cup holder:
Front Console Box
F
Seat
Spilit seat type,
Bench seat type:
Cup Holder
E
Rear Console Box

P

H17609

HINT:
Screw shapes and sizes are indicated in the table below. The codes (A – I) correspond to those indicated on the previous page.

mm (in.)

Code	Shape	Size	Code	Shape	Size	Code	Shape	Size
Ⓐ	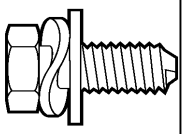	ø = 8 (0.31) L = 18 (0.71)	Ⓑ	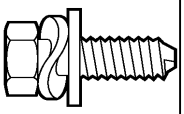	ø = 6 (0.24) L = 22 (0.86)	Ⓒ		ø = 6 (0.24) L = 16 (0.63)
Ⓓ	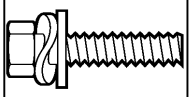	ø = 6 (0.24) L = 25 (0.98)	Ⓔ	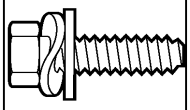	ø = 6 (0.24) L = 22 (0.87)	Ⓕ		ø = 5 (0.20) L = 16 (0.63)
Ⓖ	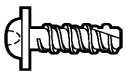	ø = 5 (0.20) L = 14 (0.55)	Ⓗ	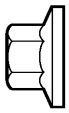	ø = 8 (0.31)	Ⓘ		ø = 6 (0.24)

T

H17620

BO07X–02

INSTALLATION

Installation is in the reverse order of removal procedure (See page BO–52).

BO42D–01

REMOVAL

HINT:

Tape the screwdriver tip before to pry parts.

1. REMOVE STEERING WHEEL (See page SR–14)

2. REMOVE COMBINATION SWITCH

(a) Remove the 3 screws and steering column covers.

(b) Disconnect the 4 connectors and remove 3 screws and combination switch.

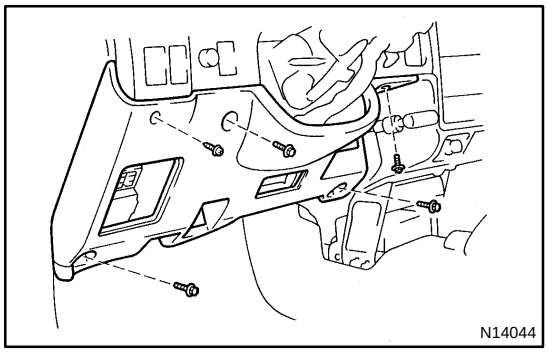

3. REMOVE LOWER LH FINISH PANEL

(a) Remove the 2 screws and hood lock release lever.

(b) Remove the 4 bolts, screw and lower LH finish panel.

4. REMOVE LOWER CENTER COVER

Remove the 2 clips and lower center cover.

5. REMOVE CENTER CLUSTER FINISH PANEL

(a) Remove the 3 heater control knobs.

(b) Using a screwdriver, pry and remove the heater control panel.

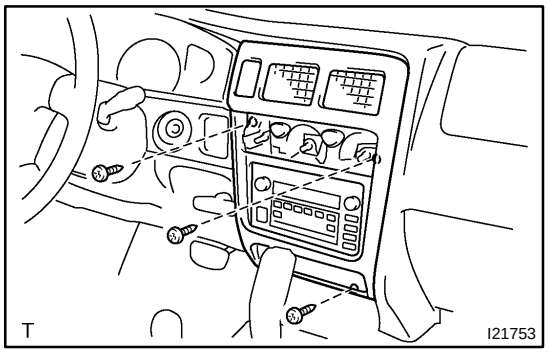

(c) Remove the 3 screws.

(d) Using a screwdriver, remove the center cluster finish panel.

(e) Disconnect the connector and ash receptacle box light.

(f) Remove the cigar lighter hole bezel from the center cluster finish panel.

(g) Remove the front ash receptacle box and retainer from the center cluster finish panel.

6. REMOVE RADIO AND STEREO

Remove the 4 bolt and redio and stereo, disconnect the connectors.

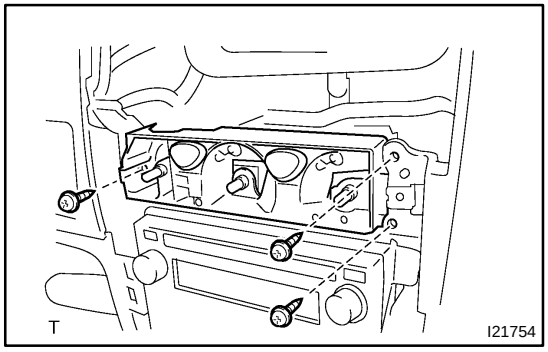

7. REMOVE HEATER CONTROL UNIT

Remove the 3 screws and heater control unit and disconnect the 2 connectors.

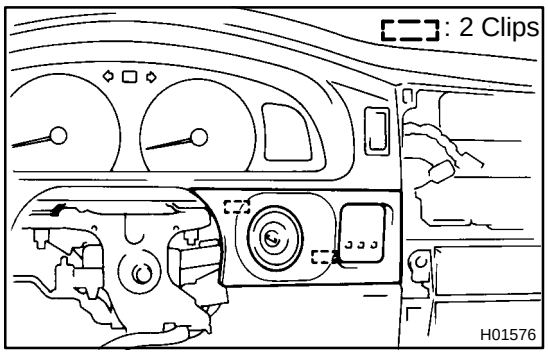

8. REMOVE STARTER SWITCH BEZEL

Using a screwdriver, remove the starter switch bezel and disconnect the connector.

9. REMOVE LOWER CENTER FINISH PANEL

Remove the screw and panel.

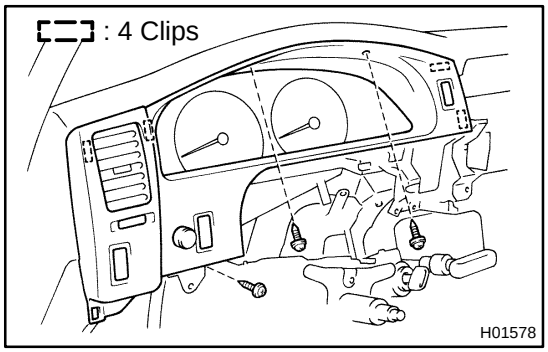

10. REMOVE CLUSTER FINISH PANEL

(a) Remove the screw and No. 2 heater to register duct.
(b) Remove the 3 screws.
(c) Using a screwdriver, remove the cluster finish panel and disconnect the connectors.

11. REMOVE COMBINATION METER

Remove the 4 screws and meter and disconnect the connectors.

12. REMOVE NO. 1 HEATER TO REGISTER DUCT

Remove the screw and No. 1 heater to register duct.

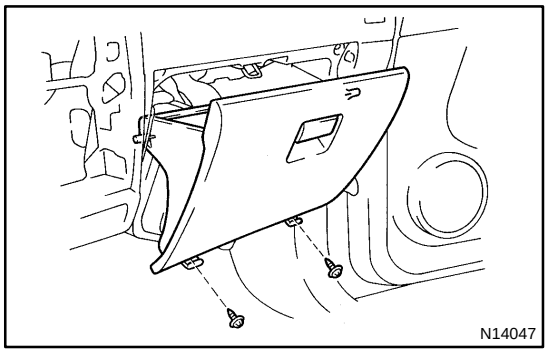

13. REMOVE GLOVE COMPARTMENT DOOR

Remove the 2 screws and glove compartment door.

14. REMOVE GLOVE COMPARTMENT DOOR REINFORCEMENT

Remove the bolt 2 screws and glove compartment door reinforcement.

15. REMOVE NO. 4 HEATER TO REGISTER DUCT

16. DISCONNECT FRONT AIRBAG CONNECTOR (See page RS–25)

17. REMOVE LOWER NO. 2 FINISH PANEL

Remove the 3 bolts and lower No. 2 finish panel and disconnect the wire harnesses.

18. REMOVE STEERING COLUMN (See page SR–14)

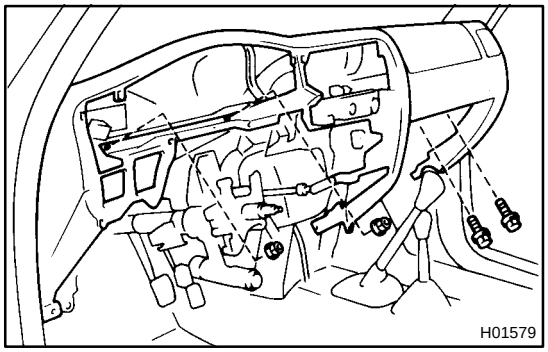

19. REMOVE INSTRUMENT PANEL

Remove the 2 bolts, 2 nuts and instrument panel with the passenger air bag.

Torque: 20 N·m (205 kgf·cm, 15 ft·lbf)

20. REMOVE NO. 1 BRACE

(a) Remove the 2 screw and disconnect the connector.
(b) Remove the 3 bolts and No. 1 brace and disconnect the wire harness.

21. REMOVE NO. 2 BRACE

Disconnect the wire harness and remove the 2 bolts and No. 2 brace.

22. REMOVE CENTER HEATER TO REGISTER DUCT

Remove the screw and center heater to register duct.

23. REMOVE NO. 1 HEATER TO RESISTER DUCT

Remove the screw and No. 1 heater to register duct.

24. REMOVE DEFROSTER NOZZLE

25. DISCONNECT PARKING BRAKE LEVER

Remove the 2 bolts and disconnect the parking brake lever.

26. REMOVE REINFORCEMENT

(a) Disconnect the wire harnesses.

(b) Remove the 3 bolts, 4 nuts, 2 screws and reinforcement.

27. REMOVE CENTER BRACKET

Remove the screw and center bracket.

28. REMOVE NO. 5 HEATER TO REGISTER DUCT

Remove the screw and No. 5 heater to register duct.

29. REMOVE NO. 2 REGISTER

Remove the 3 screws and No. 2 register.

30. REMOVE NO. 1 REGISTER

Remove the 2 screws and No. 1 register.

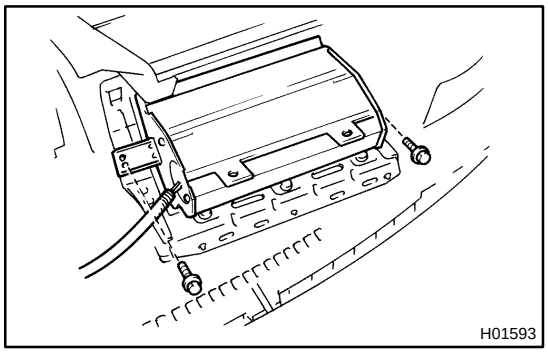

31. REMOVE FRONT PASSENGER AIRBAG ASSEMBLY

(a) Remove the 2 bolts and front passenger airbag assembly.
Torque: 5.0 N·m (51 kgf·cm, 42 in.·lbf)

(b) Remove the 3 bolts and front passenger airbag door.

(c) Remove the 2 screws and instrument panel stay.

CAUTION:

- **Do not store the front passenger airbag assembly with the airbag side deployment direction facing down.**
- **Never disassemble the front passenger airbag assembly.**

QUARTER WINDOW GLASS

COMPONENTS

BO07I–03

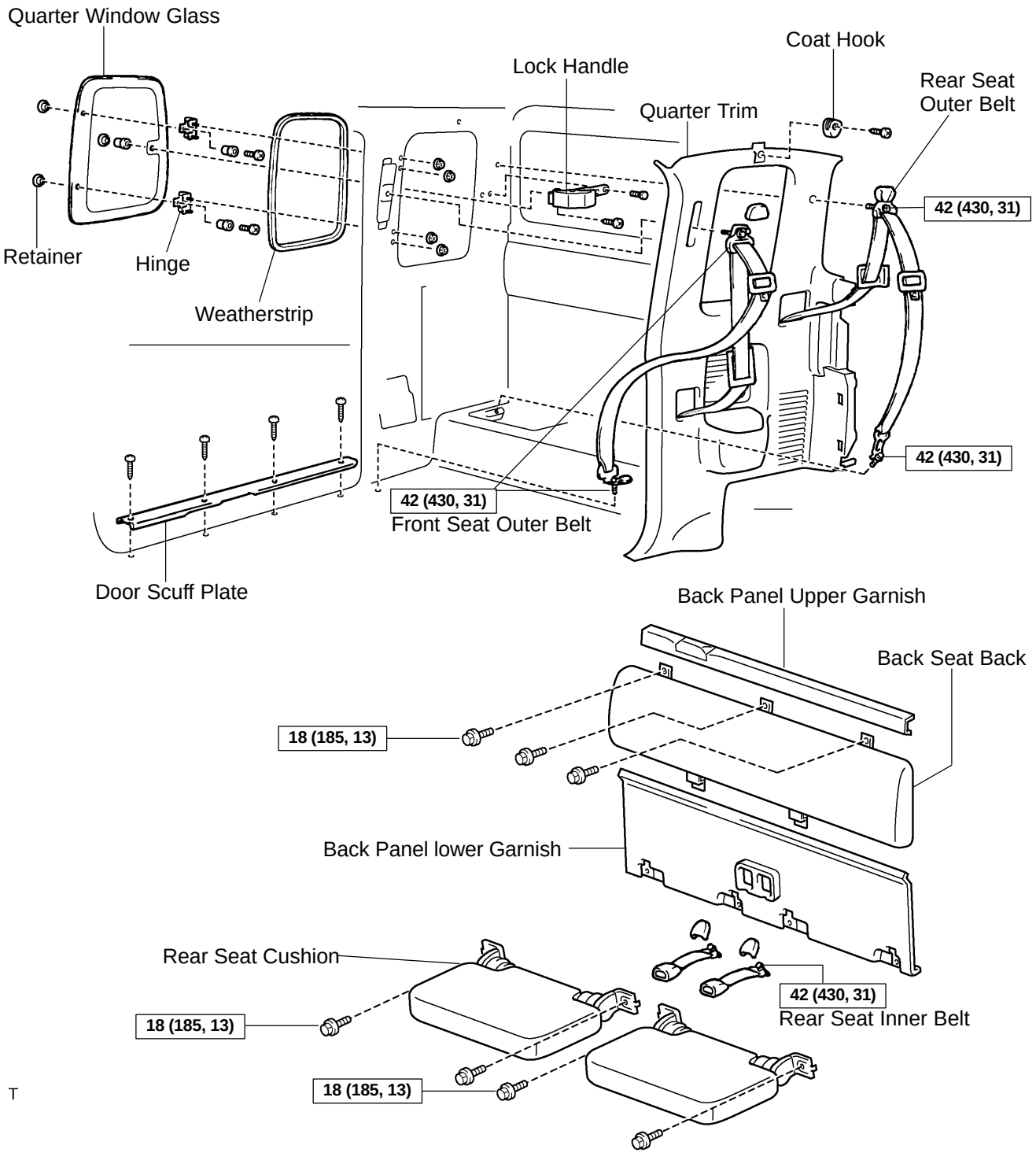

BO07K–03

INSTALLATION

Installation is in the reverse order of removal procedure (See page BO–39).

REMOVAL

1. REMOVE QUARTER TRIM (See page BO–63)

2. REMOVE LOCK HANDLE

Remove the 2 bolts and lock handle.

BO428–01

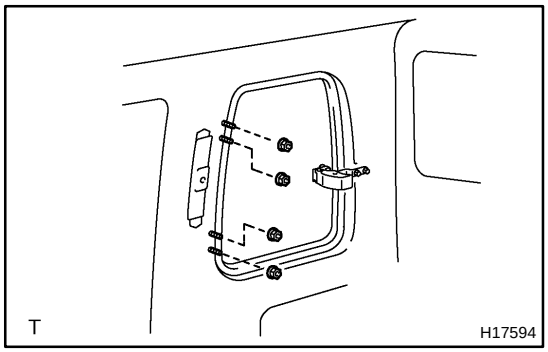

3. REMOVE QUARTER WINDOW GLASS

(a) Remove the 4 nuts and quarter window glass.

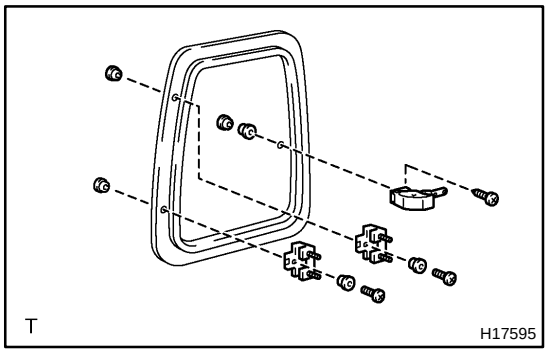

(b) Remove the lock handle from the quarter window glass.

(c) Remove the 2 hinges from the quarter window glass.

REAR COMBINATION LIGHT

COMPONENTS

BO425–01

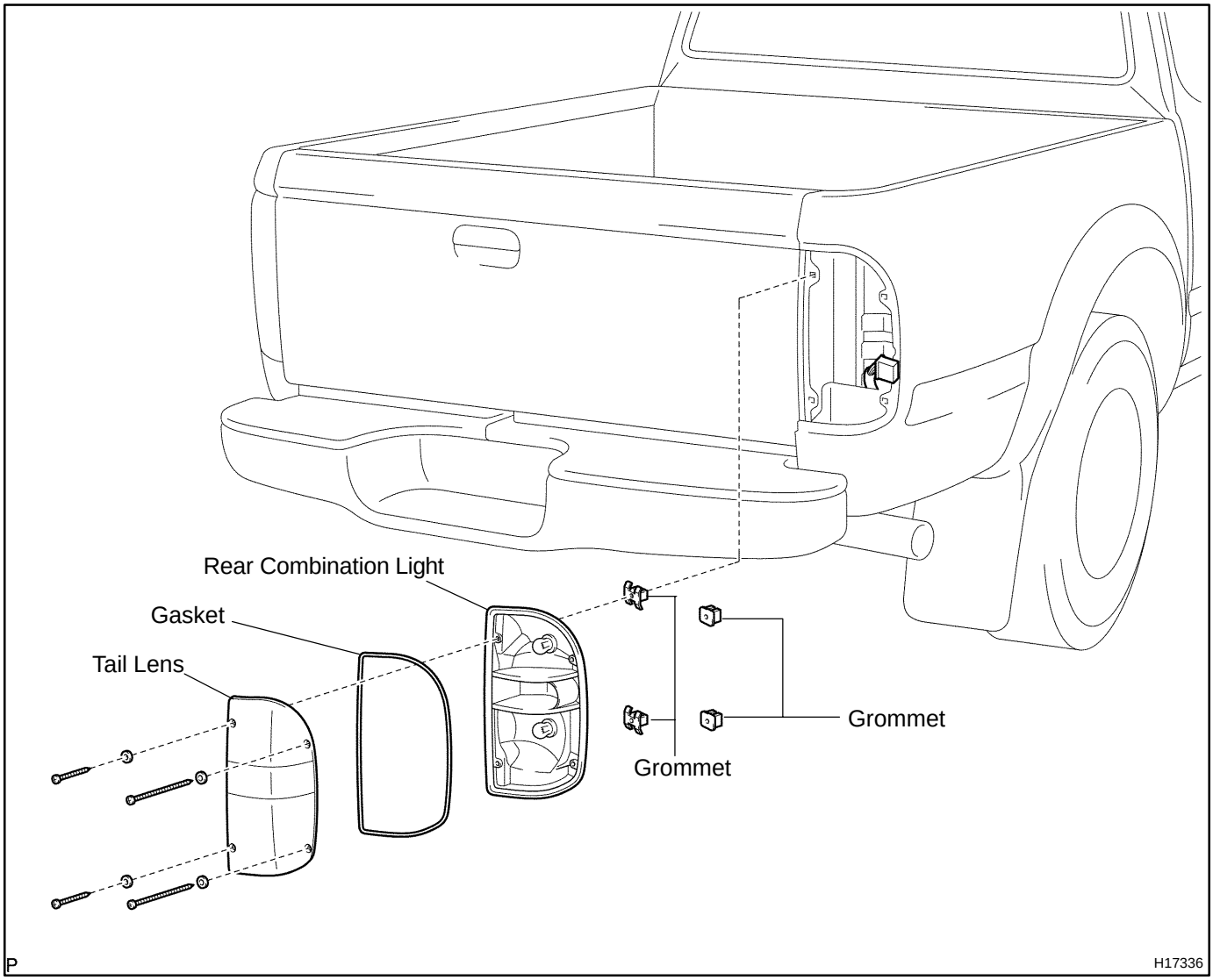

REAR BUMPER

COMPONENTS

BO421–01

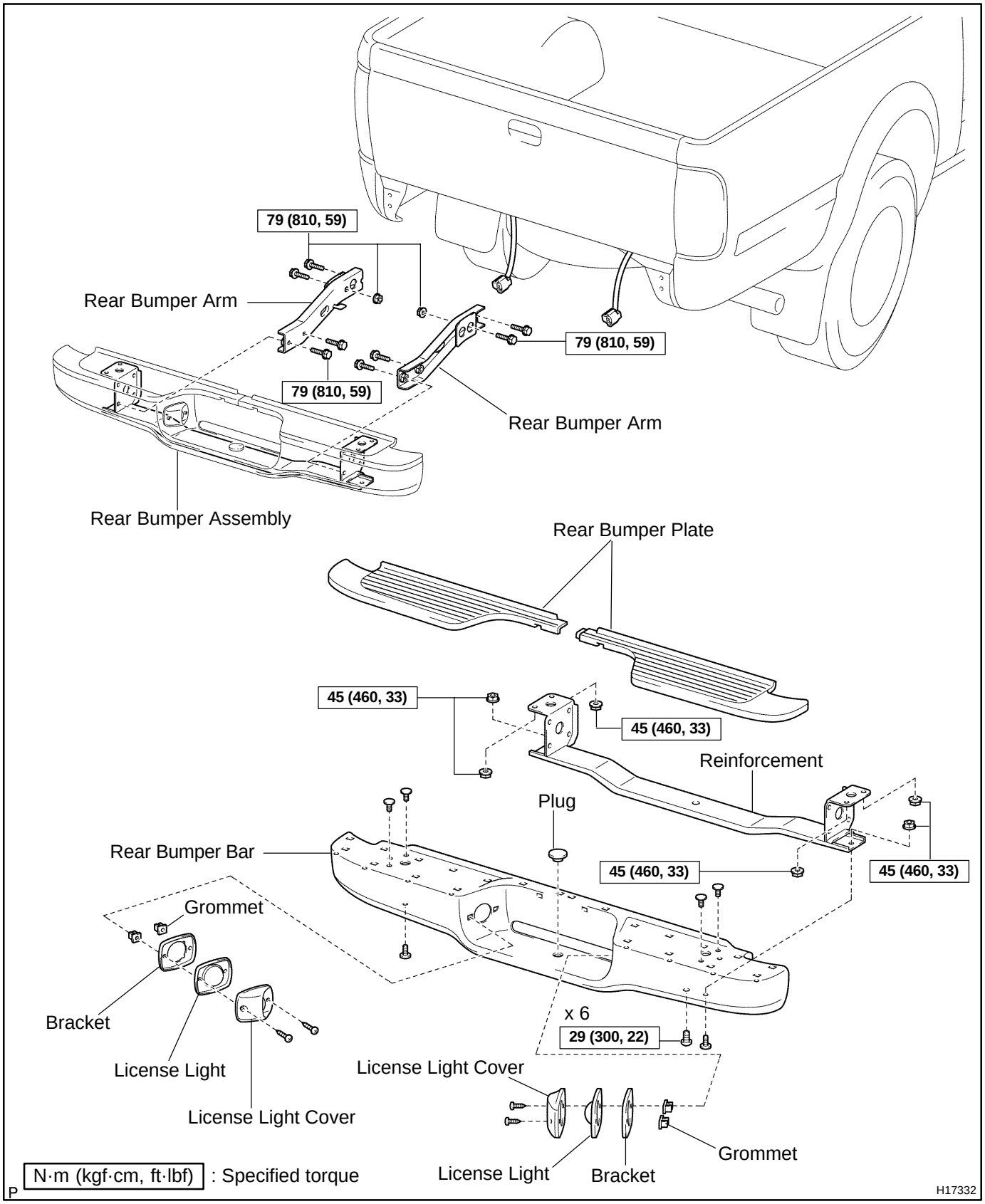

BO26B–02

ADJUSTMENT

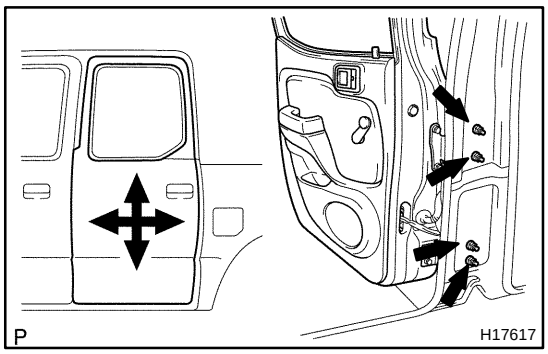

1. ADJUST DOOR IN FORWARD/REARWARD AND VERTICAL DIRECTIONS

(a) Remove the front seat outer belt (See page BO–103).

(b) Loosen the body side hinge nuts, bring and push the door to adjust.

Torque: 20 N·m (200 kgf·cm, 15 ft·lbf)

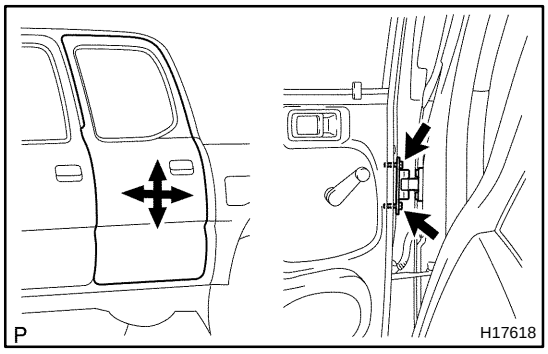

2. ADJUST DOOR IN LEFT/RIGHT AND VERTICAL DIRECTIONS

Loosen the door side hinge bolts, bring or push the door to adjust.

HINT:

Substitute the standard bolt for the centering bolts (See page BO–11).

Torque: 23 N·m (230 kgf·cm, 17 ft·lbf)

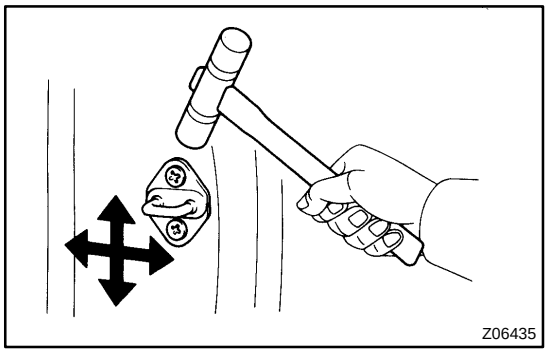

3. ADJUST DOOR LOCK STRIKER

(a) Check that the door fit and door lock linkages are adjusted correctly.

(b) Adjust the striker position by slightly loosening the striker mounting screws, and hitting the striker with a hammer.

(c) Tighten the striker mounting screws again.

Torque: 13 N·m (130 kgf·cm, 9 ft·lbf)

REAR DOOR (Double Cab)

BO429–01

COMPONENTS

w/o Power Door Lock and Power Window Regulator:

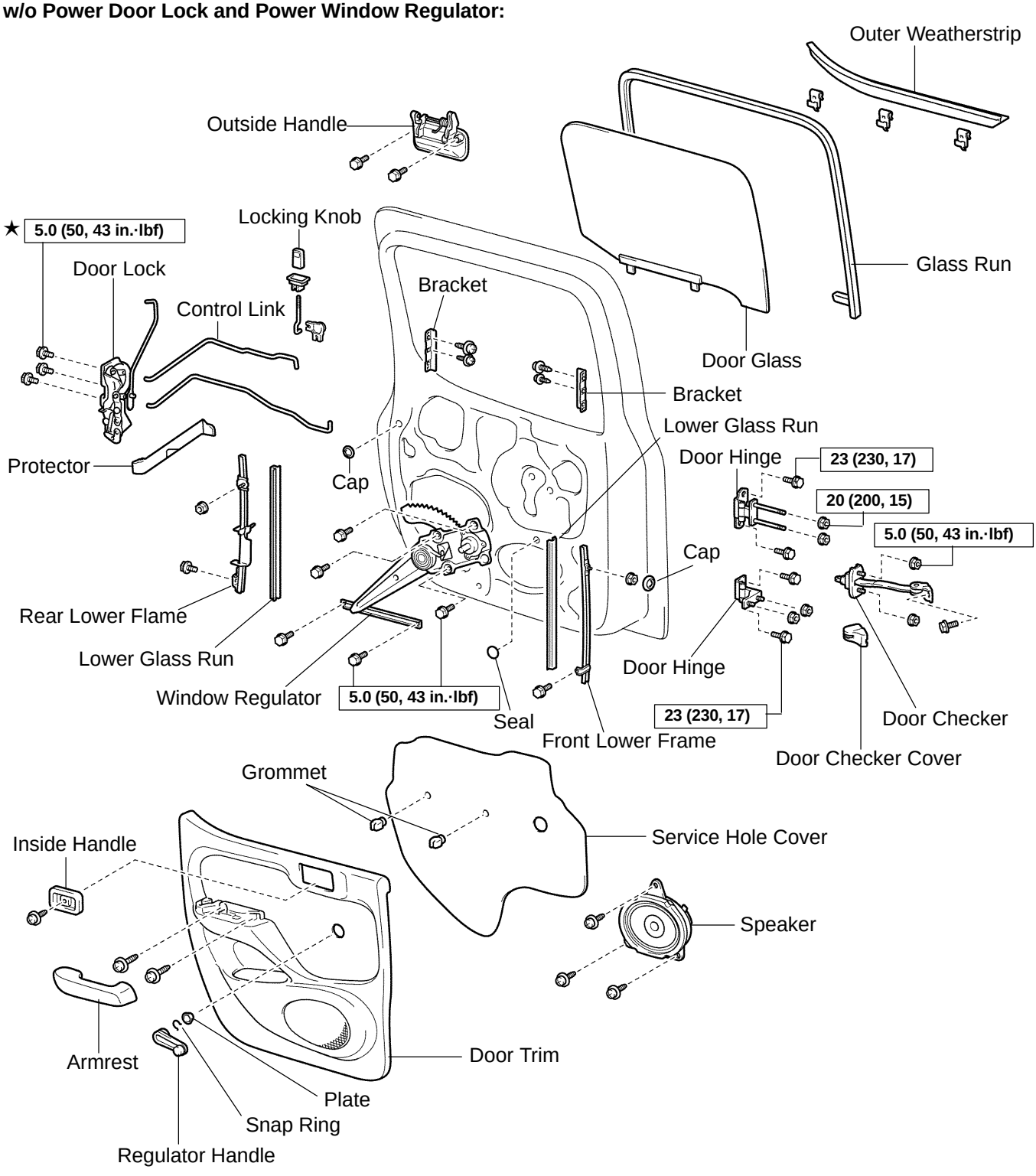

N·m (kgf·cm, ft·lbf) : Specified torque

★ Precoated part

P

H17345

w/ Power Door Lock and Power Window Regulator:

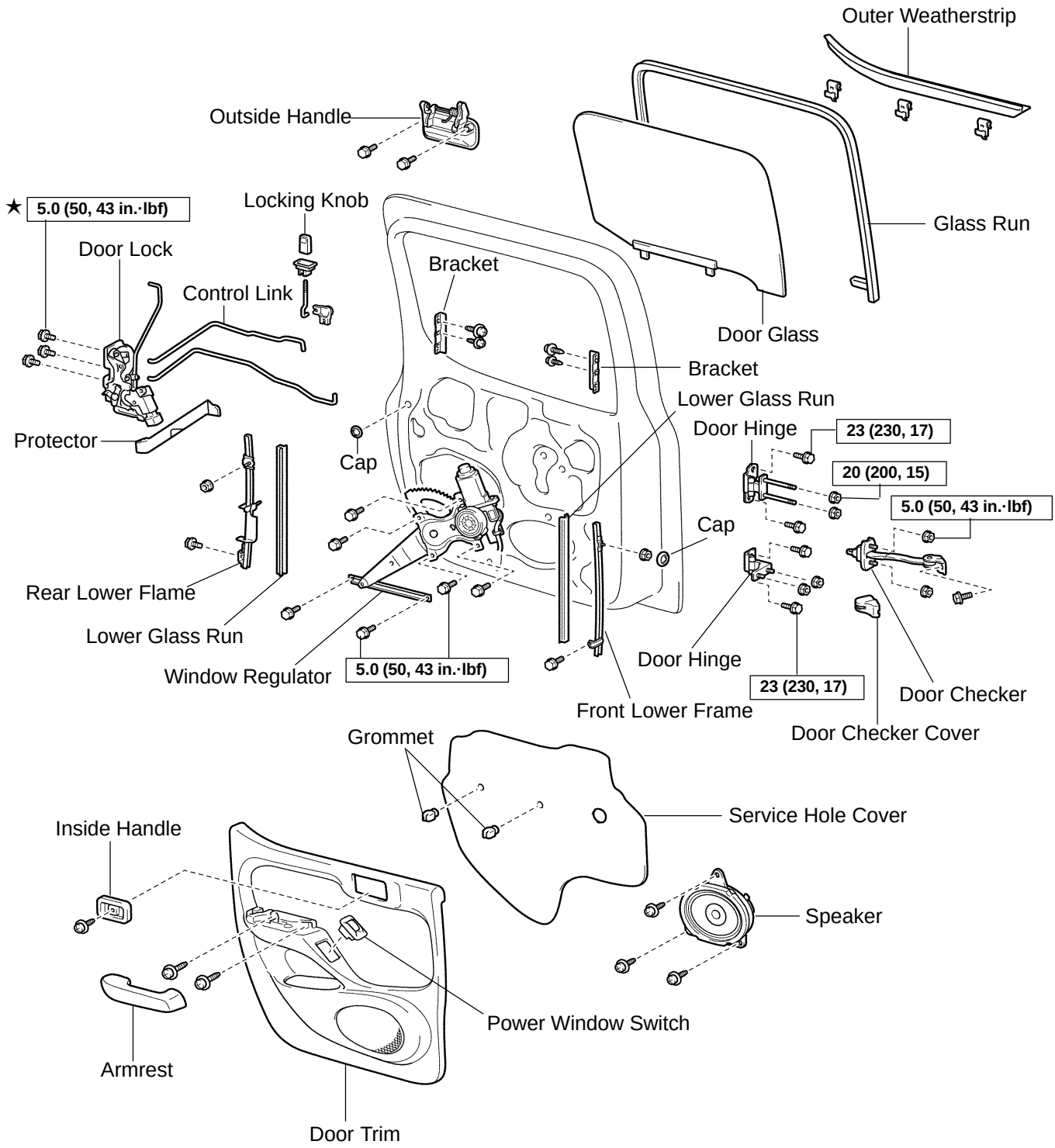

N·m (kgf·cm, ft·lbf) : Specified torque

★ Precoated part

H17346

BO42A–01

DISASSEMBLY

HINT:

Tape the screwdriver tip before using it to pry parts.

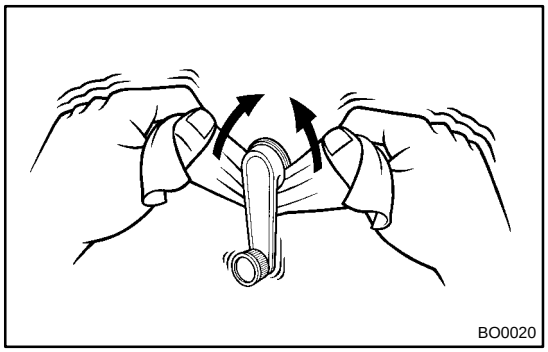

1. w/o Power window:
REMOVE REGULATOR HANDLE

Pull off the snap ring with a cloth and remove the regulator handle and plate.

HINT:

At the time of reassembly, install the plate and regulator handle with the snap ring when the window glass is fully closed.

2. REMOVE DOOR INSIDE HANDLE

(a) Remove the screw, and slide the door inside handle forward.

(b) Disconnect the control link and remove the handle.

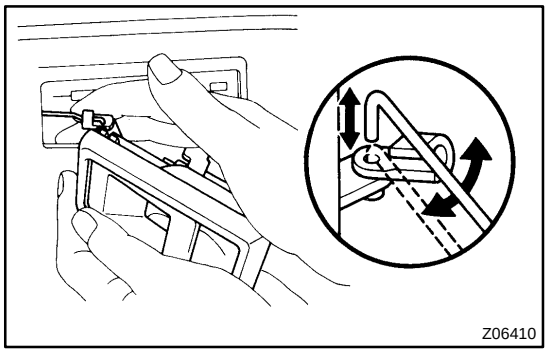

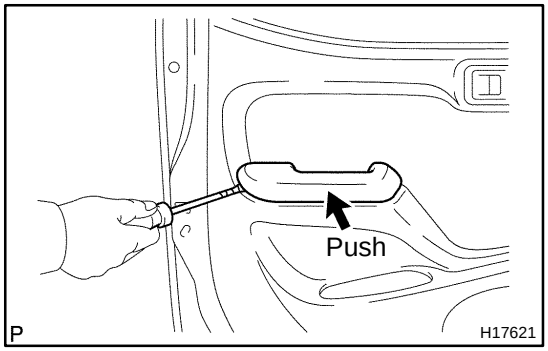

3. REMOVE ARMREST

Using a screwdriver, pry and remove the armrest during pushing the armrest outer vehicle.

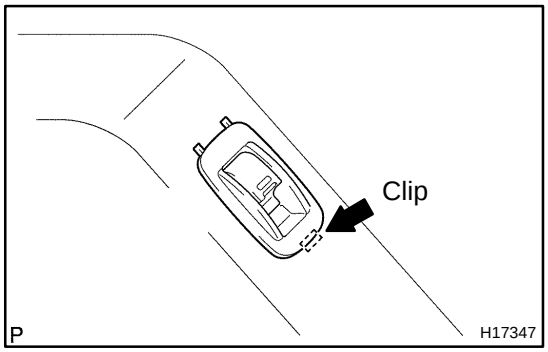

4. w/ Power window:
REMOVE POWER WINDOW SWITCH

Using a screwdriver, remove the power window switch by pulling upward and disconnect the connector.

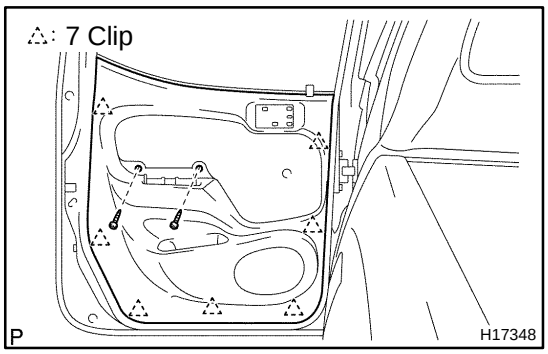

5. REMOVE DOOR TRIM

(a) Remove the 2 screws.

(b) Using a screwdriver, remove the door trim upward.

6. REMOVE SPEAKER

Disconnect the connector and remove the 3 screws and speaker.

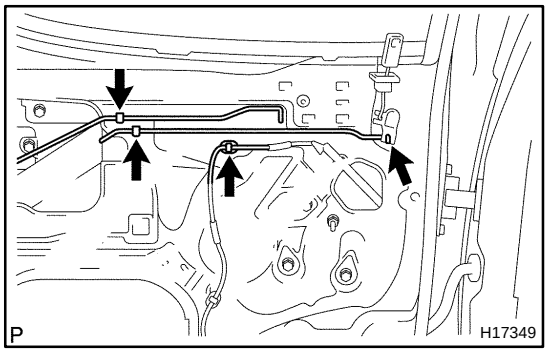

7. REMOVE SERVICE HOLE COVER

(a) Disconnect the 2 control links from the door and door lock knob.

(b) Disconnect the wire harness by removing the clip.

(c) Remove the service hole cover.

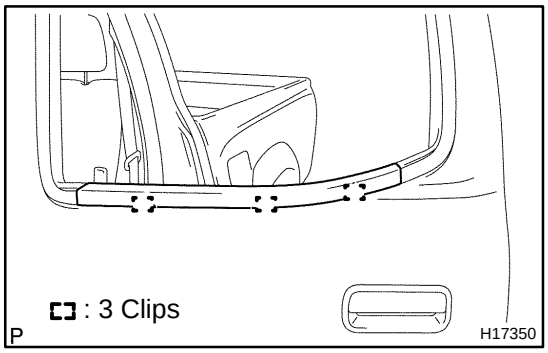

8. REMOVE WINDOW GLASS

(a) Using a screwdriver, remove the outer weatherstrip.

(b) Remove the glass run.

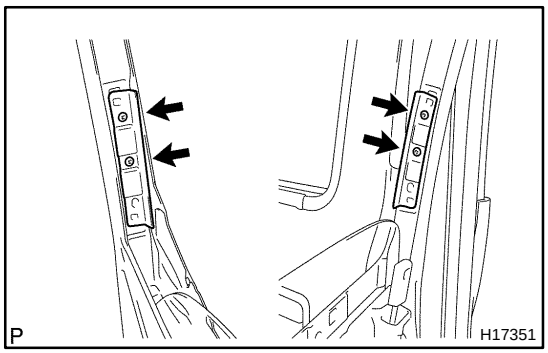

(c) Remove the 4 screws and 2 brackets.

(d) Open the window glass until seeing the 2 bolts of window glass.

(e) Remove the 2 bolts and window glass.

9. REMOVE WINDOW REGULATOR

(a) w/ Power window:
Remove the 4 bolts and window regulator.

(b) w/o Power window:
Remove the 3 bolts and window regulator.

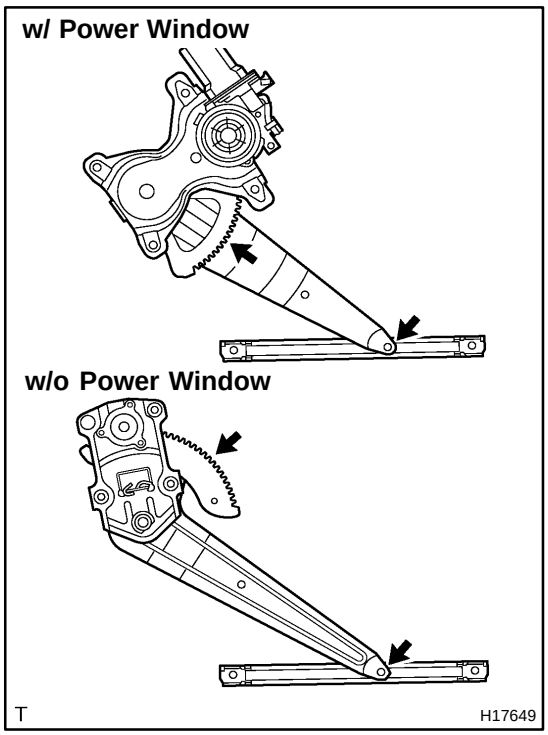

HINT:
At the time of reassembly, apply MP grease to the window regulator rollers as shown in the illustration.

10. REMOVE FRONT LOWER FRAME

(a) Remove the cap near the door hinge.
(b) Remove the bolt, nut and front lower frame.
(c) Remove the lower glass run.

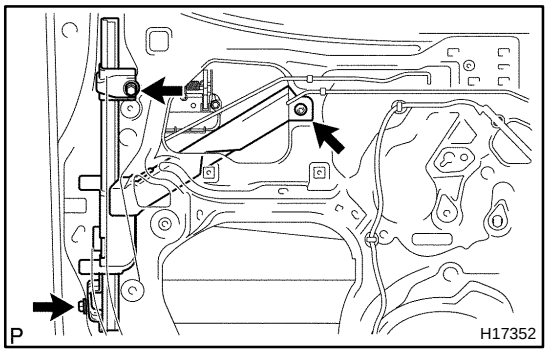

11. REMOVE REAR LOWER FRAME

(a) Remove the protector.
(b) Remove the bolt, nut and rear lower frame.
(c) Remove the lower glass run.

12. REMOVE DOOR LOCK KNOB

Remove the door lock knob link and door lock knob.

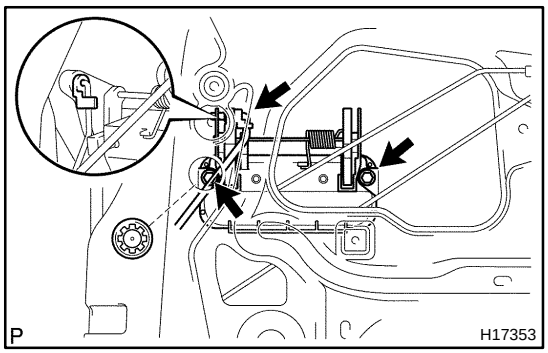

13. REMOVE OUTER DOOR HANDLE

(a) Disconnect the control link of the door lock.
(b) Remove the cap near the door lock.
(c) Remove the 2 bolts and outer door handle.

14. REMOVE DOOR LOCK

(a) w/ Power door lock:
Disconnect the connector.
(b) Remove the 2 contorl links.
(c) Using a torx socket wrench (T30), remove the 3 bolts and door lock.
Torque: 5.0 N·m (50 kgf·cm, 43 in.·lbf)

HINT:
At the time of reassembly, please refer to the following items.

- Apply adhesive to the 3 screws.
Part No. 08833–00070, THREE BOND 1324 or equivalent
- Apply MP grease to the sliding and rotating parts of the door lock.

15. DISCONNECT WIRE HARNESS

BO0BV–02

REASSEMBLY

Reassembly is in the reverse order of disassembly procedure (See page BO–21).

REAR SEAT (Double Cab)

COMPONENTS

BO42J–01

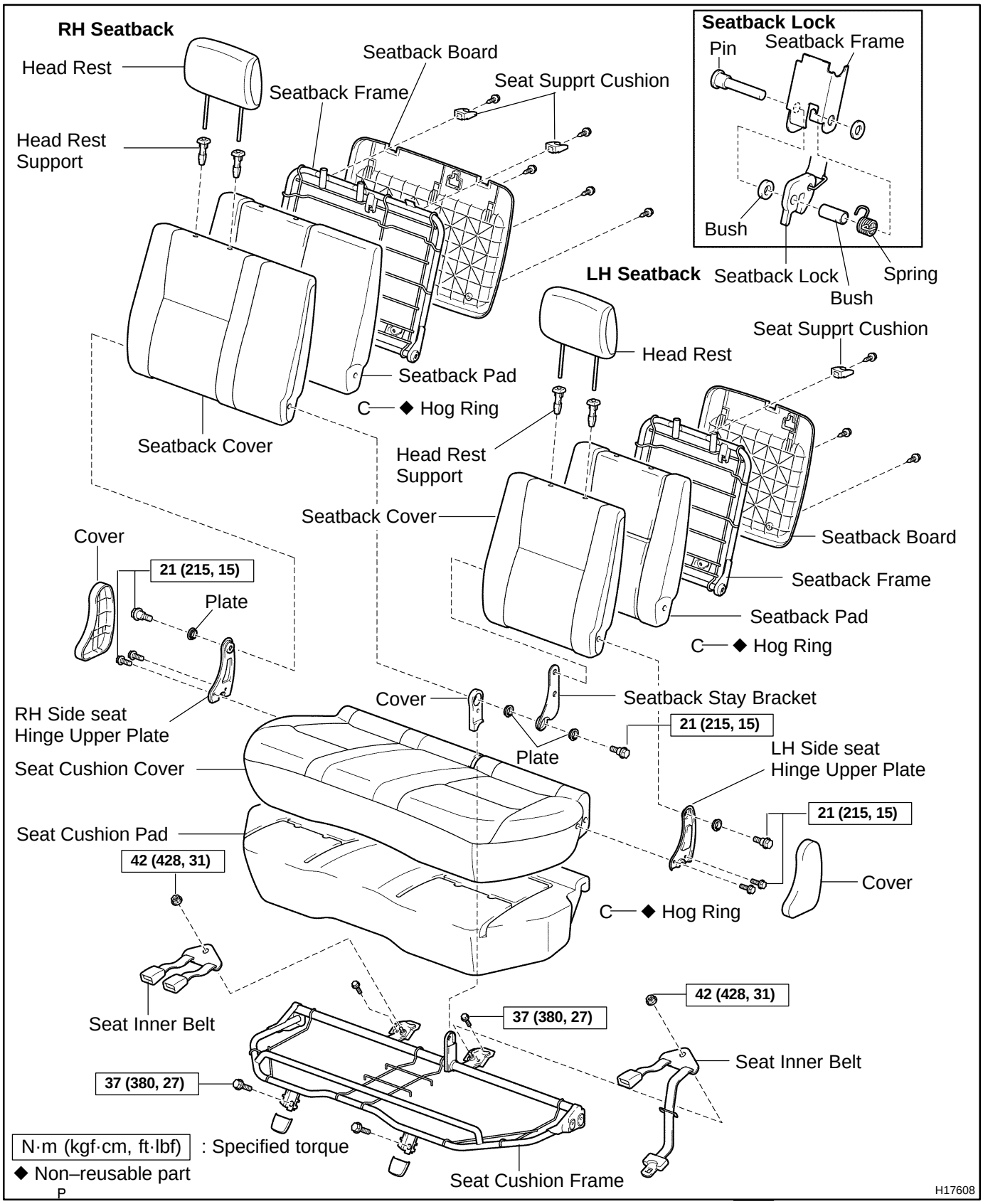

BO42K–01

DISASSEMBLY

1. REMOVE REAR SEAT

Remove the 2 covers, 4 bolts and rear seat.

Torque: 37 N·m (380 kgf·cm, 27 ft·lbf)

2. REMOVE HEADREST

3. REMOVE INNER SEAT BELTS

Remove the 2 bolts and 2 seat inner belts.

Torque: 42 N·m (430 kgf·cm, 31 ft·lbf)

4. SEPARATE SEATBACKS AND SEAT CUSHION

(a) Remove the cover, 3 bolts, plate and RH side seat hinge upper plate.

Torque: 21 N·m (215 kgf·cm, 15 ft·lbf)

(b) Remove the cover, 3 bolts, plate and LH side seat hinge upper plate.

Torque: 21 N·m (215 kgf·cm, 15 ft·lbf)

(c) Remove the bolt and plate, separate the 2 seatbacks and seat cushion.

Torque: 21 N·m (215 kgf·cm, 15 ft·lbf)

5. DISASSEMBLE SEAT CUSHION

(a) Remove the cover and plate from the seat cushion.

(b) Remove the hog rings and seat cushion frame from the seat cushion cover with the pad.

(c) Remove the hog rings and seat cushion cover from the seat cushion pad.

6. DISASSEMBLE RH SEATBACK

(a) Remove the 5 screws, 2 seat support cushions and seatback board.

(b) Remove the hog rings and 2 headrest supports and seatback frame from the seatback cover with the pad.

(c) Remove the hog rings and seatback cover from the seatback pad.

7. DISASSEMBLE LH SEATBACK

(a) Remove the 3 screws, seat support cushion and seatback board.

(b) Remove the hog rings, 2 headrest supports and seatback frame from the seatback cover with the pad.

(c) Remove the 2 bolts and seatback stay bracket.

(d) Remove the hog rings and seatback cover from the seatback pad.

8. DISASSEMBLE SEATBACK LOCK

Remove the snap, rod, 2 bushes, spring and seatback lock from the seatback frame.

BO42L–01

REASSEMBLY

Reassembly is in the reverse order of disassembly procedure (See page BO–101).

REAR SEAT (Extra Cab)

COMPONENTS

BO42R–01

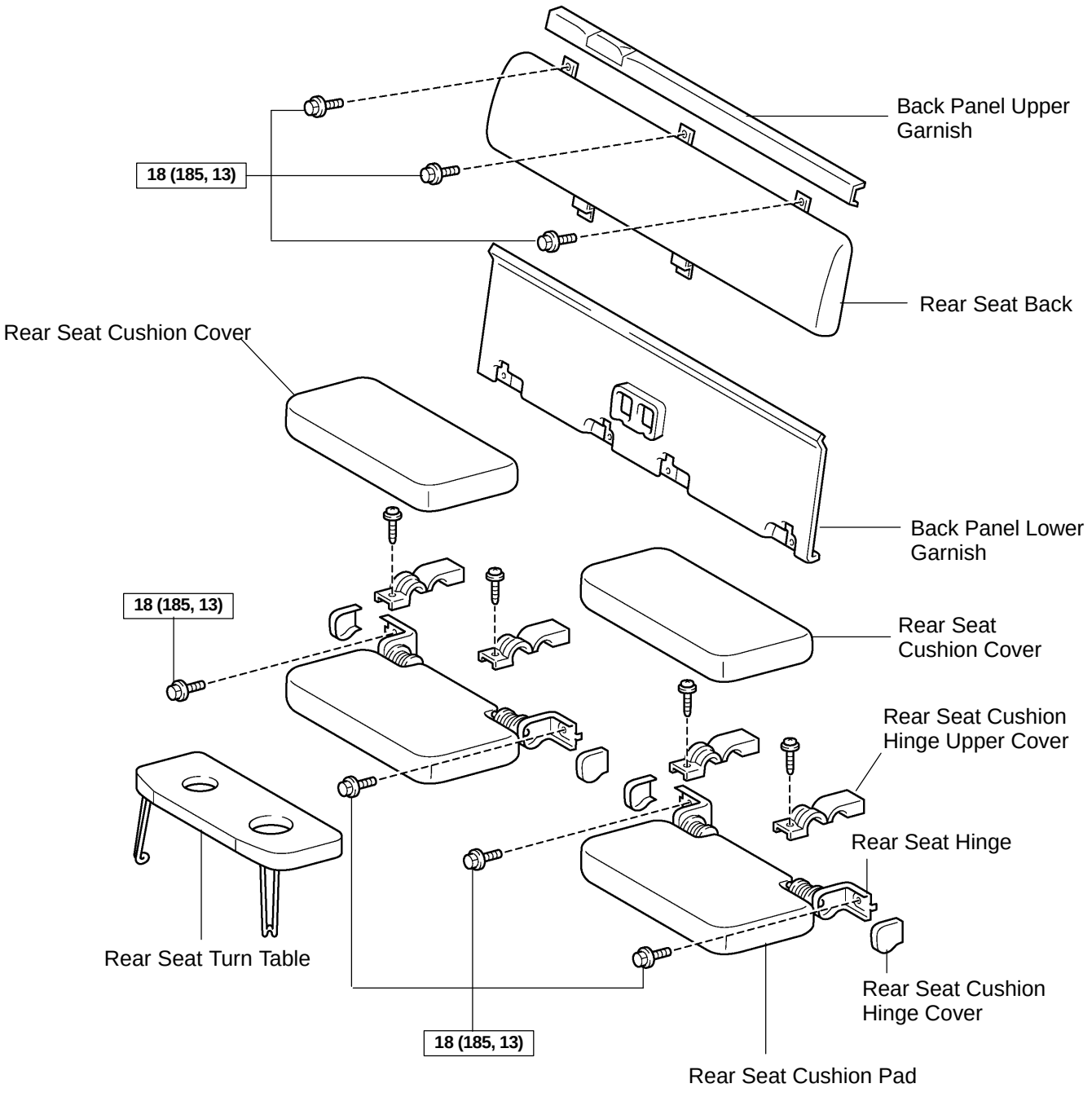

N·m (kgf·cm, ft·lbf) : Specified torque

H17588

BO42T–01

DISASSEMBLY

1. REMOVE REAR SEAT CUSHION HINGE COVERS

Using a screwdriver, remove the rear seat cushion hinge covers.

HINT:

Tape the screwdriver tip before use.

2. REMOVE REAR SEAT CUSHION HINGE UPPER COVERS

Remove the screws and rear seat cushion hinge upper covers.

3. REMOVE REAR SEAT CUSHION COVERS

Remove the rear seat cushion covers from the rear seat cushion pads.

BO42V–01

INSTALLATION

1. INSTALL SEAT TURN TABLE

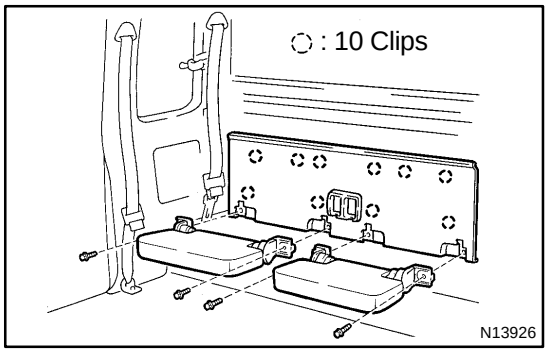

2. INSTALL REAR SEAT CUSHIONS

Install the rear seat cushions with the 4 bolts.

Torque: 18 N·m (185 kgf·cm, 13 ft·lbf)

3. INSTALL BACK PANEL LOWER GARNISH

Install the back panel lower garnish to the body.

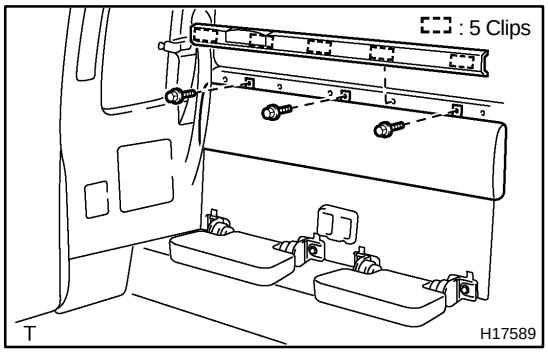

4. INSTALL BACK PANEL UPPER GARNISH AND REAR SEAT BACK

(a) Install the rear seat back with the 3 bolts.

Torque: 18 N·m (185 kgf·cm, 13 ft·lbf)

(b) Install the garnish to the body.

BO42U–01

REASSEMBLY

1. INSTALL REAR SEAT CUSHION COVERS

Install the rear seat cushion covers to the rear seat cushion pads.

2. INSTALL REAR SEAT CUSHION HINGE UPPER COVERS

Install the rear seat cushion hinge upper covers with the screws.

3. INSTALL REAR SEAT CUSHION HINGE COVERS

Install the rear seat cushion hinge covers to the seat.

BO42S–01

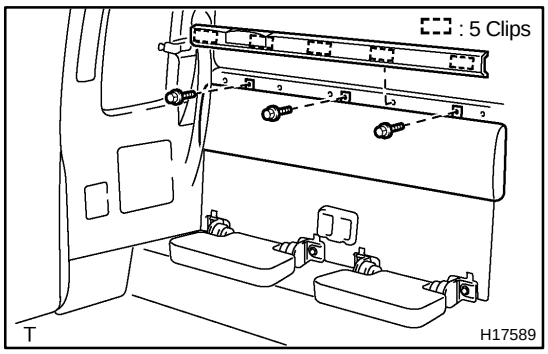

REMOVAL

1. REMOVE BACK PANEL UPPER GARNISH AND REAR SEAT BACK

(a) Using a screwdriver, remove the garnish.

HINT:

Tape the screwdriver tip before use.

(b) Remove the 3 bolts and rear seat back.

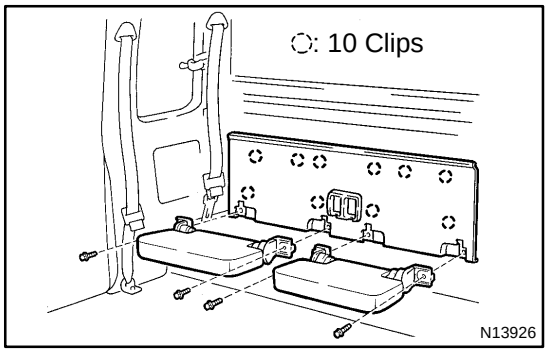

2. REMOVE BACK PANEL LOWER GARNISH

Using a screwdriver, remove the garnish.

HINT:

Tape the screwdriver tip before use.

3. REMOVE REAR SEAT CUSHIONS

Remove the 4 bolts and rear seat cushions.

4. REMOVE SEAT TURN TABLE

REMOVABLE ROOF

COMPONENTS

BO07Q–04

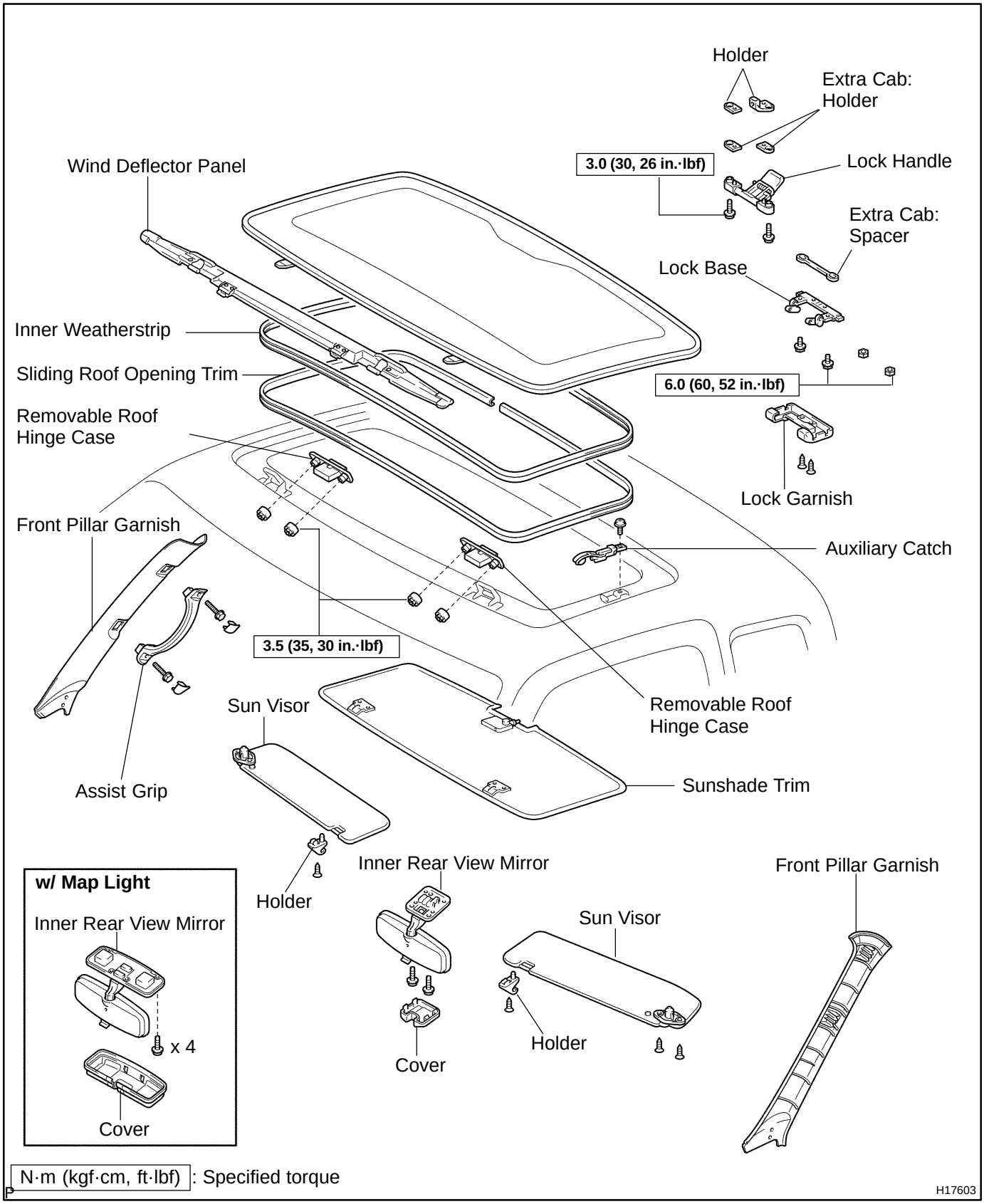

BO07S–02

INSTALLATION

Installation is in the reverse order of removal procedure (See page BO–45).

BO42C–01

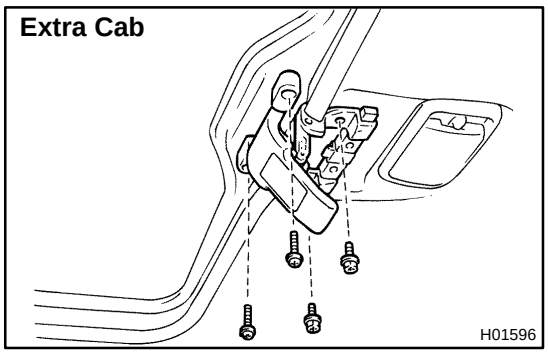

REMOVAL

1. REMOVE SUNSHADE TRIM

2. REMOVE LOCK HANDLE AND LOCK BASE

(a) Remove the 2 screws and lock garnish.

(b) Extra cab:
Remove the lock handle and holders with 2 bolts.

(c) Double cab
Remove the lock handle and holders with 2 nuts.
Torque: 3.0 N·m (30 kgf·cm, 26 in.·lbf)

(d) Remove the lock base and spacer with 2 screws.
Torque: 6.0 N·m (60 kgf·cm, 52 in.·lbf)

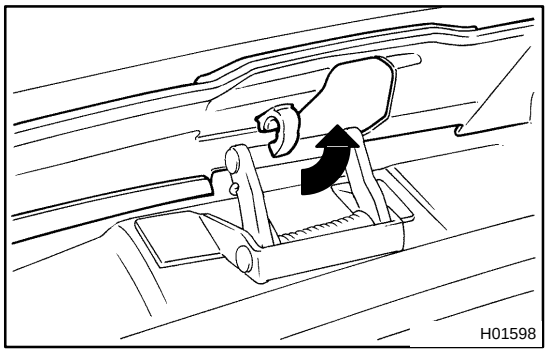

3. REMOVE WIND DEFLECTOR PANEL

(a) Remove the clip as shown in the illustration.

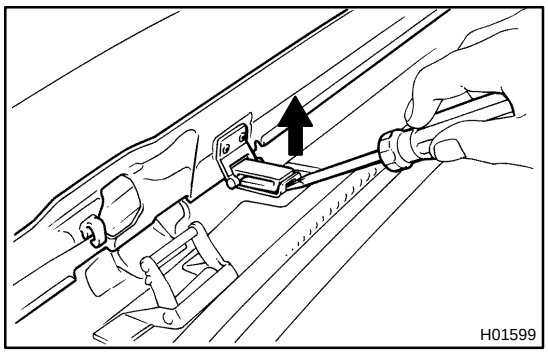

(b) Using a screwdriver, remove the wind deflector panel as shown in the illustration.

(c) Employ the same manner described above to the other side.

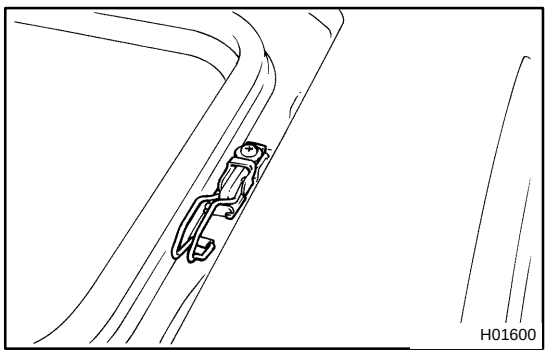

4. REMOVE REMOVABLE ROOF AUXILIARY CATCH

Remove the screw and auxiliary catch.

5. REMOVE ROOF HEAD LINING (See page BO–63, BO–68)

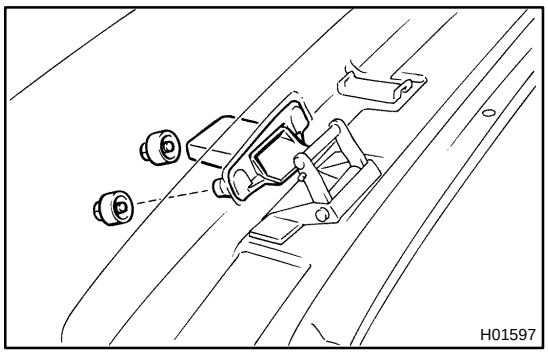

6. REMOVE REMOVABLE ROOF HINGE CASE

(a) Remove the 2 bolts and hinge case.
Torque: 3.5 N·m (35 kgf·cm, 30 in.·lbf)

(b) Employ the same manner described above to the other side.

ROOF HEADLINING (Double Cab)

BO42G–01

COMPONENTS

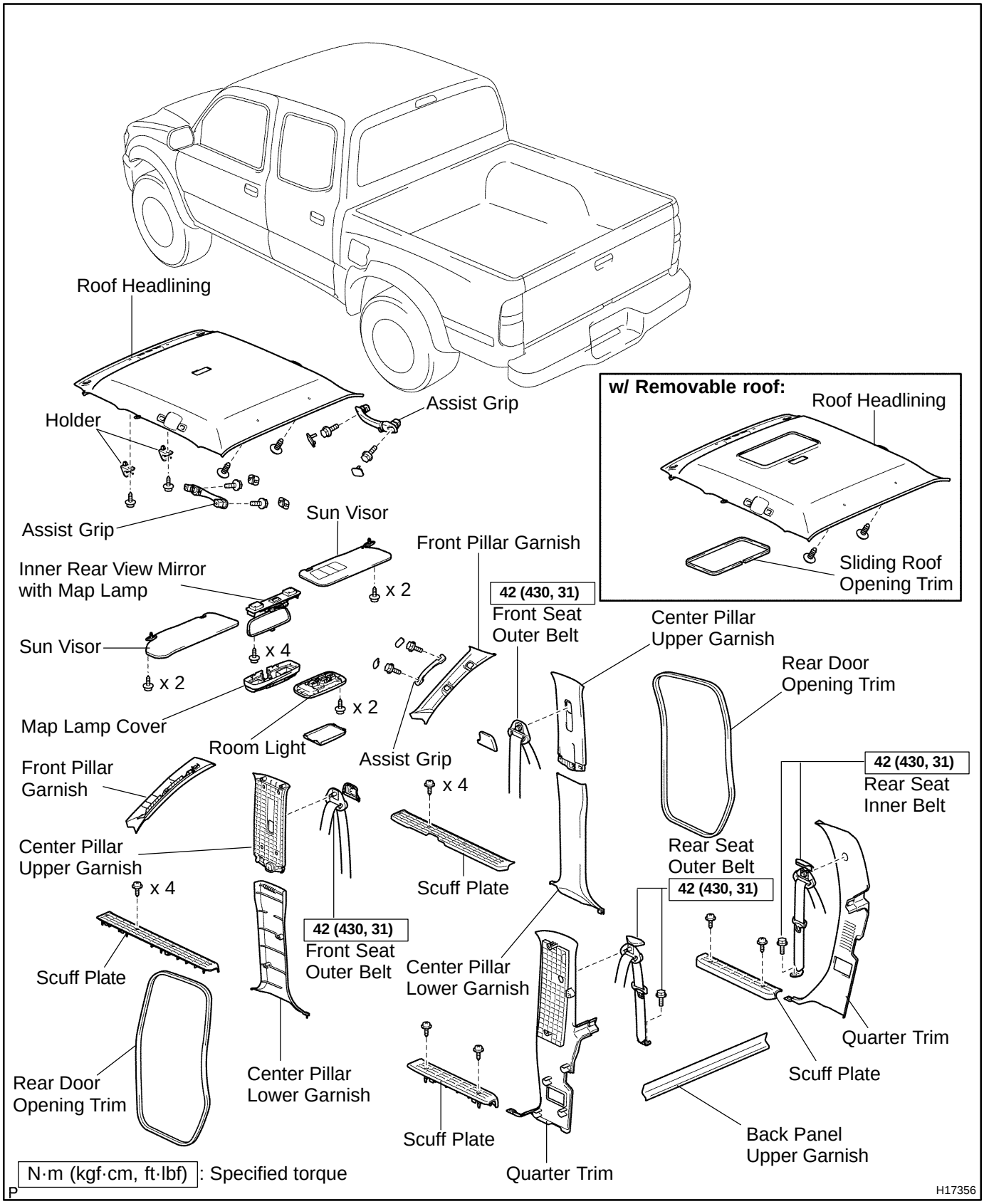

BO42I–01

INSTALLATION

Installation is in the reverse order of removal procedure (See page BO–68).

BO42H–02

REMOVAL

1. w/ Removable roof:
REMOVE SUNSHADE TRIM

2. w/ Removable roof:
REMOVE REMOVABLE ROOF LOCK HANDLE AND LOCK BASE

3. w/ Removable roof:
REMOVE SLIDING ROOF OPENING TRIM

4. REMOVE FRONT SEAT

5. REMOVE REAR SEAT

6. REMOVE CENTER CONSOLE

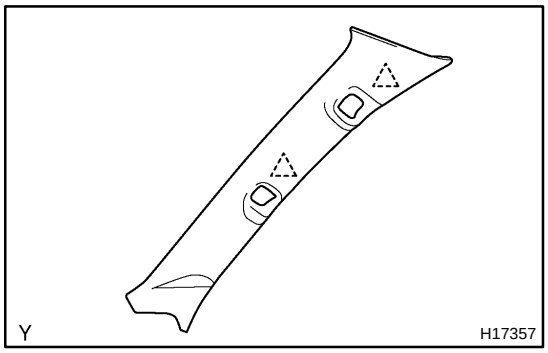

7. REMOVE FRONT PILLAR GARNISHES

(a) Disconnect the weatherstrip around the front pillar garnish.

(b) W/Assist grip:
Remove the 2 plugs and 2 bolts and assist grip.

(c) Remove the front pillar garnish and 2 clips.

8. REMOVE REAR DOOR WEATHER STRIPS

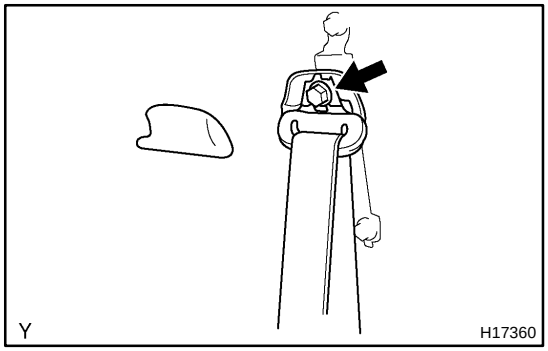

9. REMOVE UPPER CENTER PILLAR GARNISHES

(a) Disconnect the front outer seat belt.
Using a screwdriver, remove the cover and bolts and disconnect the seat belt.

(b) Remove the 4 bolts and front scuff plate.

(c) Remove the 2 bolts and rear scuff plate.

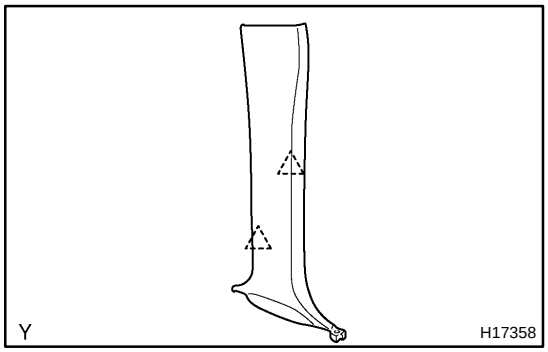

(d) Using a screwdriver, remove the lower center pillar garnish.

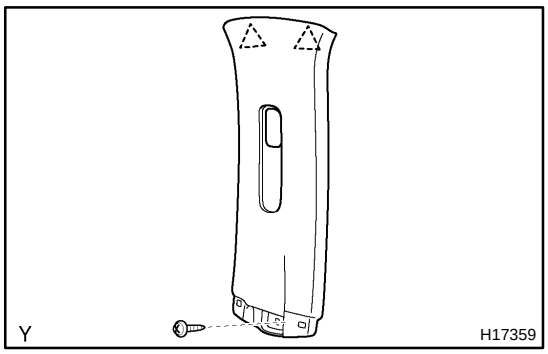

(e) Using a screwdriver, remove the screw, upper center pillar garnish.

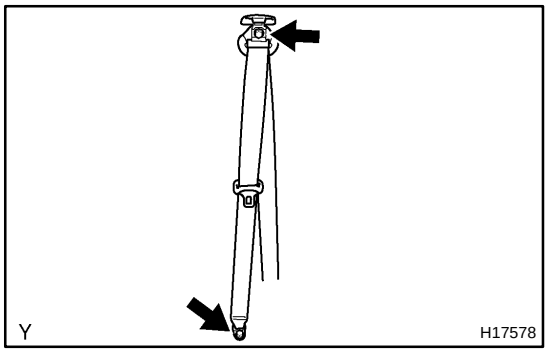

10. REMOVE REAR QUARTER GARNISHES

(a) Disconnect the rear outer seat belt.
  (1) Using a screwdriver, open the cover and remove the 2 bolts.
  (2) Disconnect the seat belt from the garnish.

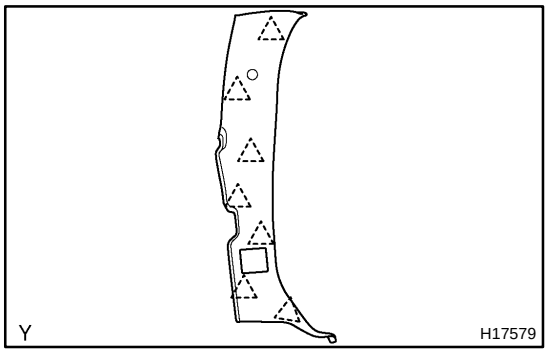

(b) Using a screwdriver, remove the back panel upper garnish.

(c) Using a screwdriver, remove the rear quarter garnish.

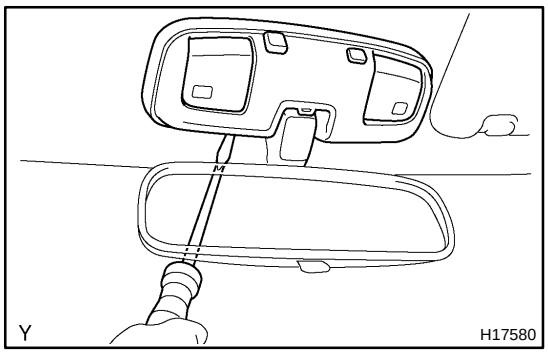

11. REMOVE MAP LAMP AND MIRROR

(a) Using a screwdriver, remove the cover.

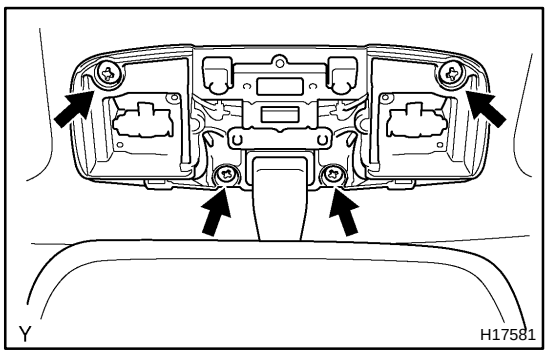

(b) Remove the 4 screws, map lamp and mirror, disconnect the connector.

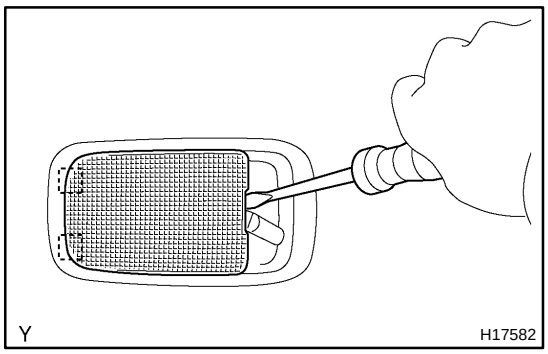

12. REMOVE ROOM LAMP

(a) Using a screwdriver, remove the cover.

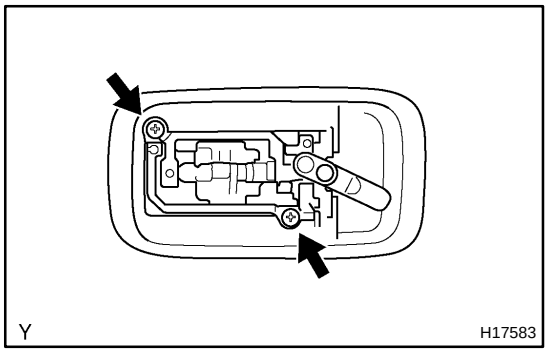

(b) Remove the 2 screws, and room lamp, disconnect the connector.

13. REMOVE REAR ASSIST GRIPS

(a) Using a screwdriver, remove the 2 plugs, 2 bolts and rear assist grips.

(b) Remove the other one.

14. REMOVE SUN VISORS

(a) Remove the 2 screws and sun visor.

(b) Remove the other one.

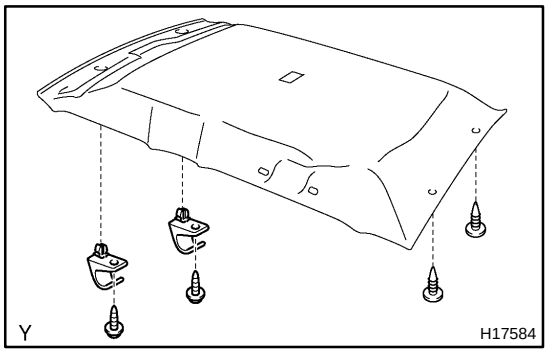

15. REMOVE ROOF HEADLINING

Remove the 2 screws, 2 sun visor holders, 2 clips and roof headlining from the passenger door.

ROOF HEADLINING (Extra Cab)

COMPONENTS

BO084–04

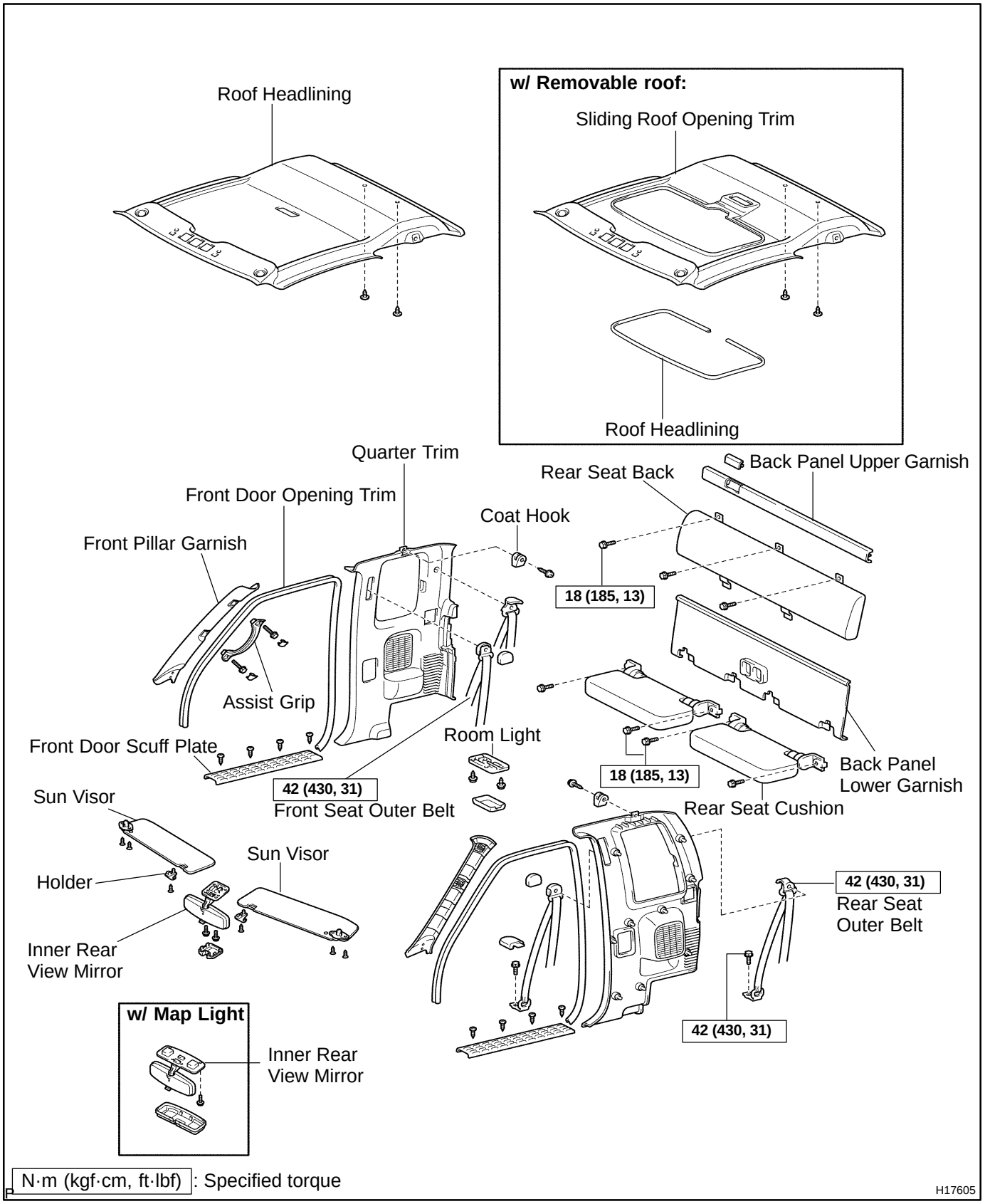

BO086–03

INSTALLATION

Installation is in the reverse order of removal procedure (See page BO–63).

BO42F–01

REMOVAL

HINT:
Tape the screwdriver tip before using to pry parts.

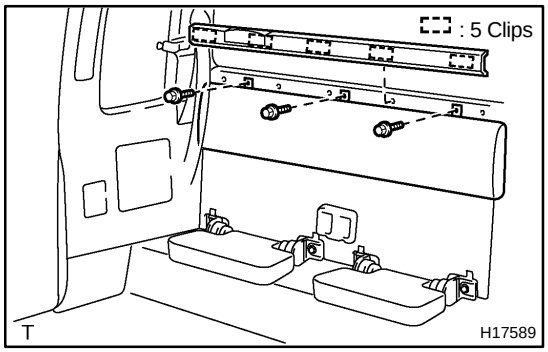

1. REMOVE BACK PANEL UPPER GARNISH AND REAR SEAT BACK

(a) Using a screwdriver, remove the garnish.
(b) Remove the 3 bolts and rear seat back.
Torque: 18 N·m (185 kgf·cm, 13 ft·lbf)

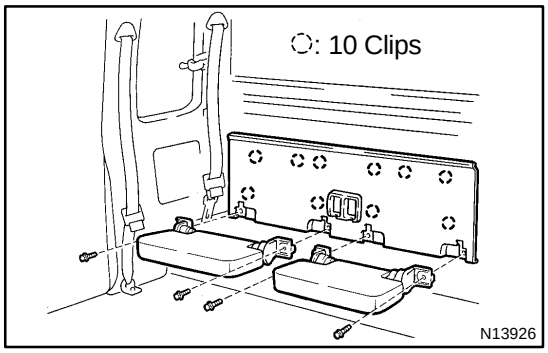

2. REMOVE BACK PANEL LOWER GARNISH

Using a screwdriver, remove the garnish.

3. REMOVE REAR SEAT CUSHIONS

Remove the 4 bolts and rear seat cushions.
Torque: 18 N·m (185 kgf·cm, 13 ft·lbf)

4. REMOVE QUARTER TRIMS

(a) Remove the 4 screws and scuff plate.
(b) Remove the door opening trim around the quarter trim.
(c) Remove the 2 cover and 2 bolts, disconnect the front seat outer belt.
(d) Using a screwdriver, open the seat belt anchor cover.
(e) Remove the 2 bolts and disconnect the rear seat outer belt.
(f) Remove the screw and coat hook.

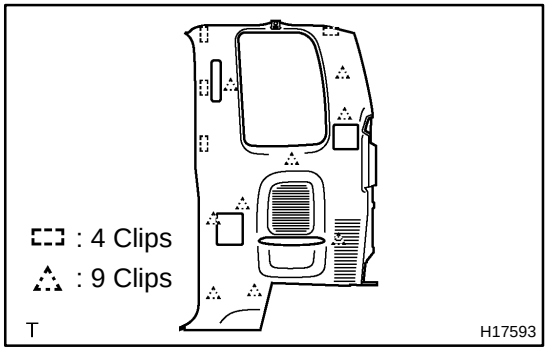

(g) Using a screwdriver, pry and remove the quarter trim.

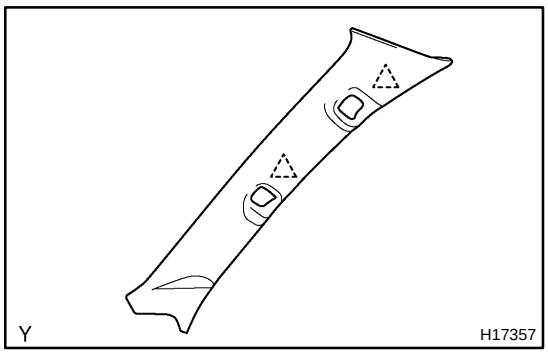

5. REMOVE FRONT PILLAR GARNISHES

(a) RH:
Remove the 2 plugs, 2 bolts and assist grip.

(b) Remove the door opening trim around the front pillar.

(c) Using a screwdriver, remove the front pillar garnishes.

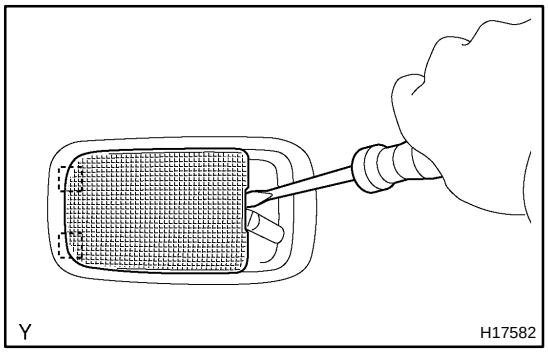

6. REMOVE ROOM LIGHT

(a) Using a screwdriver, remove the room light cover.

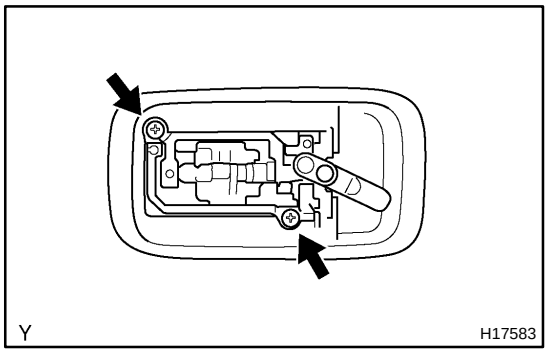

(b) Remove the 2 screws and room light, then disconnect the connecter.

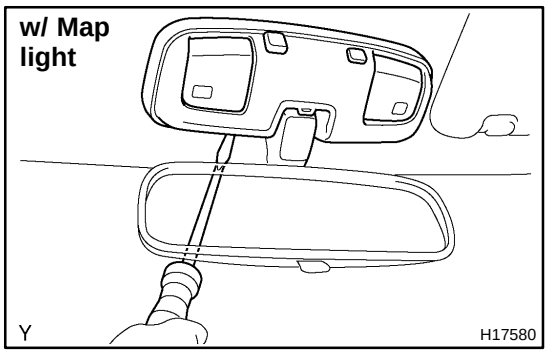

7. REMOVE INNER REAR VIEW MIRROR

(a) Using a screwdriver, remove the cover.

(b) w/o map light:
Remove the 2 screws and mirror.

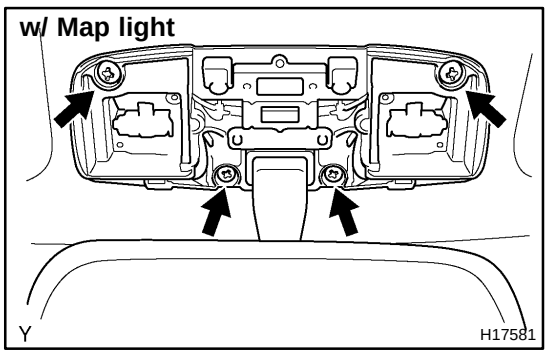

(c) w/ map light:
Remove the 4 screws and mirror with map light, then disconnect the connecter.

8. REMOVE SUN VISORS AND HOLDERS

(a) Remove the 2 screws and sun visor.

(b) Remove the screw and holder.

9. w/ Removable roof:
REMOVE SUNSHADE TRIM

10. w/ Removable roof:
REMOVE REMOVABLE ROOF LOCK HANDLE AND LOCK BASE

11. w/ Removable roof:
REMOVE SLIDING ROOF OPENING TRIM

12. REMOVE ROOF HEADLINING

Remove the 2 clips and roof headlining.

ROOF HEADLINING (Regular Cab)

BO081–04

COMPONENTS

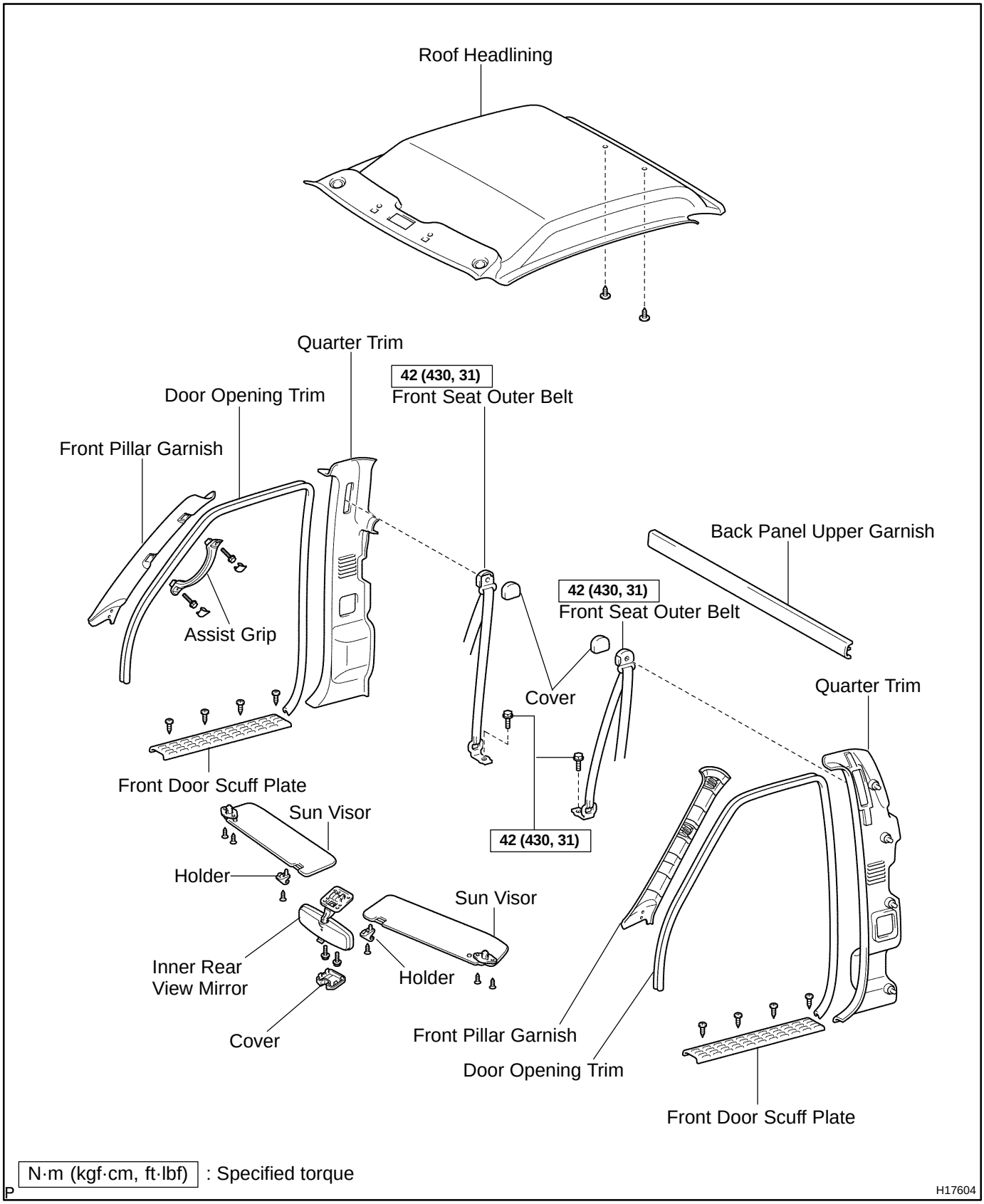

N·m (kgf·cm, ft·lbf) : Specified torque

P

H17604

BO083–02

INSTALLATION

Installation is in the reverse order of removal procedure (See page BO–60).

BO42E–01

REMOVAL

HINT:

Tape the screwdriver tip before using to pry parts

1. REMOVE QUARTER TRIMS

(a) Remove the 4 screws and scuff plate.

(b) Remove the door opening trim around the quarter trim.

(c) Remove the 2 covers and 2 bolts, disconnect the front seat outer belt.

(d) Remove the back panel upper garnish.

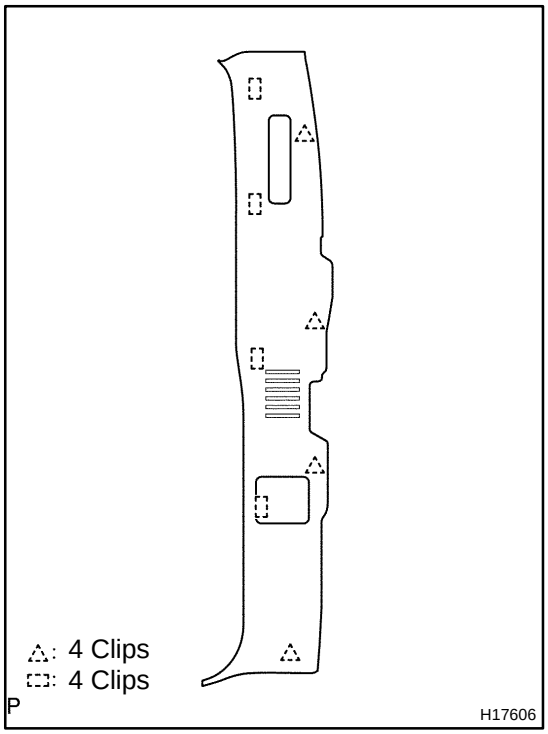

(e) Using a screwdriver, pry and remove the quarter trim.

(f) Remove the other side quarter trim.

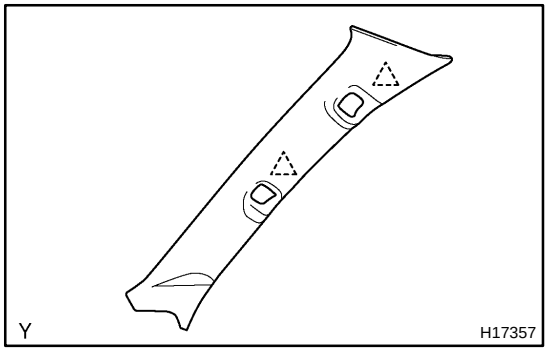

2. REMOVE FRONT PILLAR GARNISHES

(a) RH:
Remove the 2 plugs, 2 bolts and assist grip.

(b) Remove the door opening trim around the front pillar.

(c) Using a screwdriver, remove the front pillar garnishes.

3. REMOVE INNER REAR VIEW MIRROR

(a) Using a screwdriver, remove the cover.

(b) Remove the 2 screws and mirror.

4. REMOVE SUN VISORS AND HOLDERS

(a) Remove the 2 screws and sun visor.

(b) Remove the screw and holder.

5. REMOVE ROOF HEADLINING

Remove the 2 clips and roof headlining.

ROOF RAIL (Double Cab)

BO4FA–01

COMPONENTS

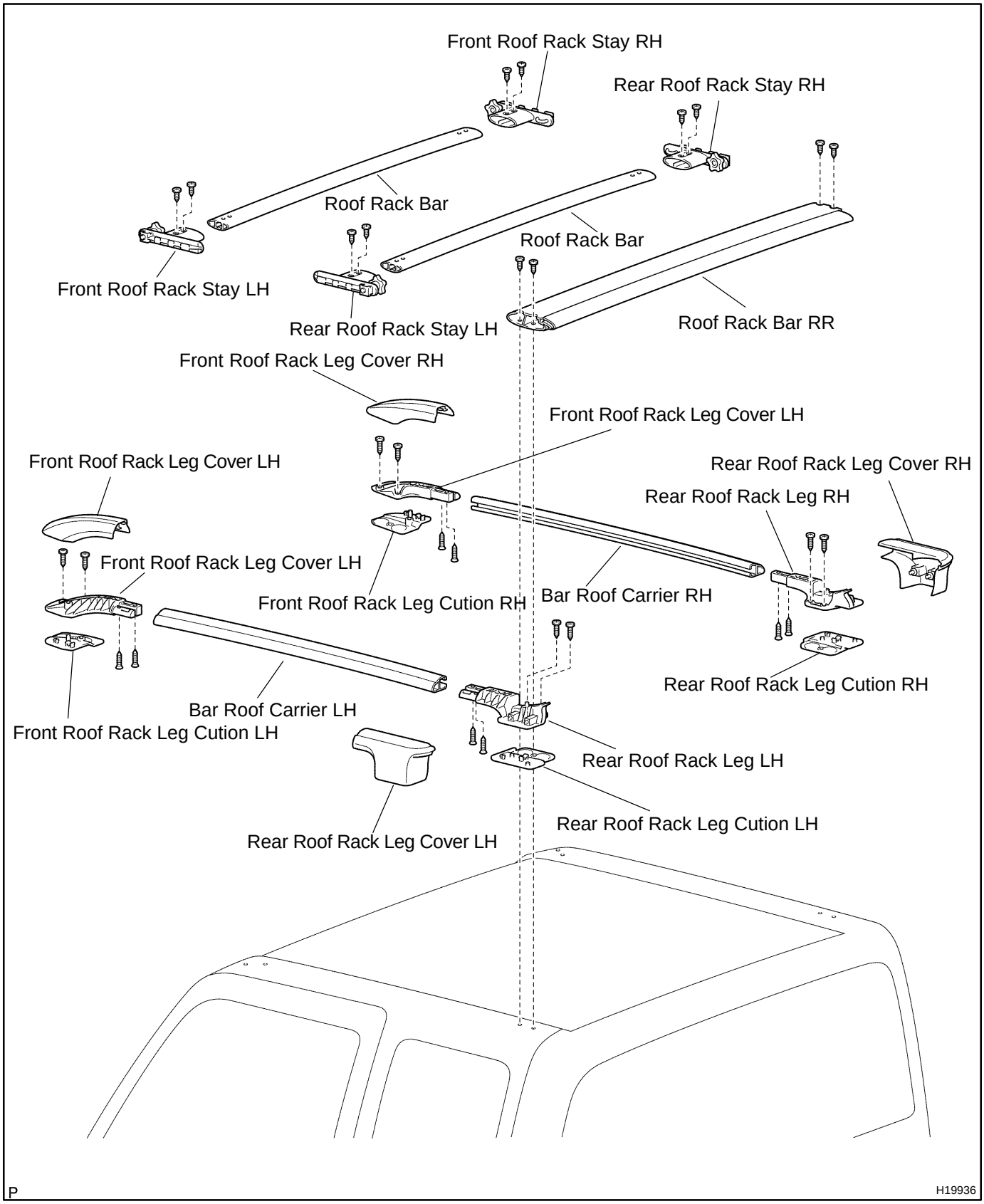

BO42P–01

DISPOSAL

HINT:

When scrapping vehicles equipped with a supplemental restraint system or disposing of a front seat outer belt (with seat belt pretensioner) always first activate the seat belt pretensioner in accordance with the procedure described below. If any abnormality occurs in the seat belt pretensioner operation, contact the SERVICE DEPT. of TOYOTA MOTOR SALES, U.S.A.,INC. When disposing of a front seat outer belt (with seat belt pretensioner) activated in a collision, follow the same procedure given in step 1–(c) in ”DISPOSAL”.

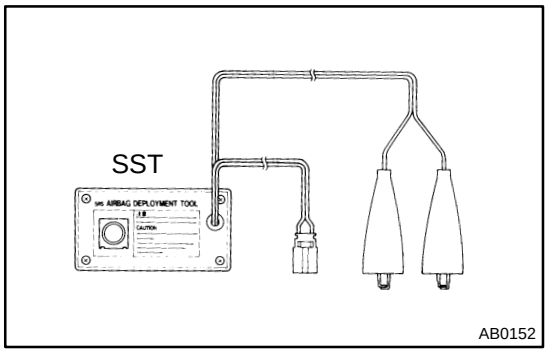

CAUTION:

- **Never dispose of front seat outer belt which has an inactivated pretensioner.**
- **The seat belt pretensioner produces a sizeable exploding sound when it activates, so perform the operation out–of–door and where it will not create a nuisance to nearby residents.**
- **When activating the seat belt pretensioner, always use the specified SST. (SRS Airbag Deployment Tool) Perform the operation in a place away from electrical noise.**

  SST 09082–00700, 09082–00770
- **When activating a front seat outer belt (with seat belt pretensioner), perform the operation at least 10 m (33 ft) away from the front seat outer belt.**
- **Use gloves and safety glasses when handling a front seat outer belt with activated pretensioner.**
- **Always wash your hands with water after completing the operation.**
- **Do not apply water, etc. to a front seat outer belt with activated pretensioner.**

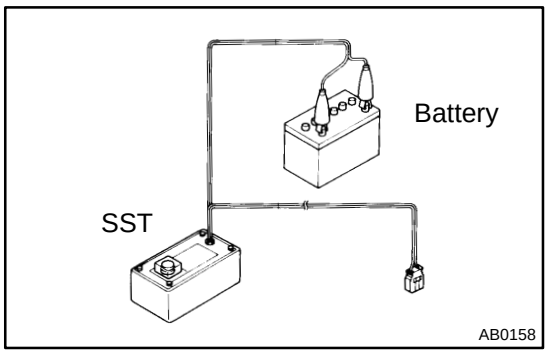

1. SEAT BELT PRETENSIONER ACTIVATION WHEN SCRAPPING VEHICLE

HINT:
Have a battery ready as the power source to activate the seat belt pretensioner.

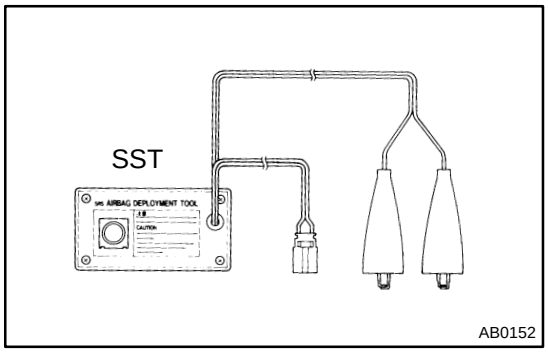

(a) Check functioning of SST.

CAUTION:
When activating the seat belt pretensioner, always use the specified SST: SRS Airbag Deployment Tool.

SST 09082–00700, 09082–00770

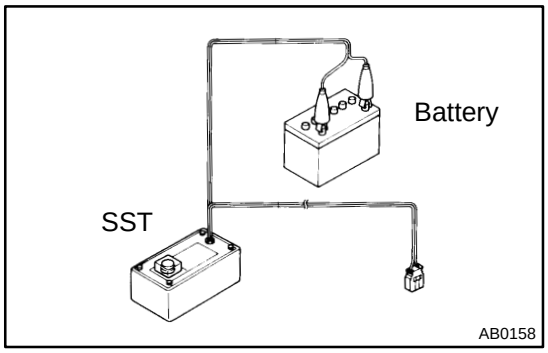

(1) Connect the SST to the battery.
Connect the red clip of the SST to the battery positive (+) terminal and the black clip to the battery negative (–) terminal.

HINT:
Do not connect the yellow connector which will be connected with the seat belt pretensioner.

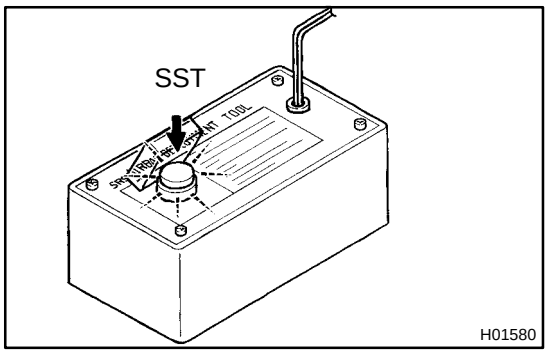

(2) Check functioning of SST.
Press the SST activation switch, and check the LED of the SST activation switch lights up.

CAUTION:
If the LED lights up when the activation switch is not being pressed, SST malfunction is probable, so definitely do not use the SST.

(b) Disconnect the pretensioner connector (See page BO–108).

(c) Install the SST.

(1) Buckle the front seat belt and check that there is no looseness and slack in the front seat inner belt and front seat outer belt.

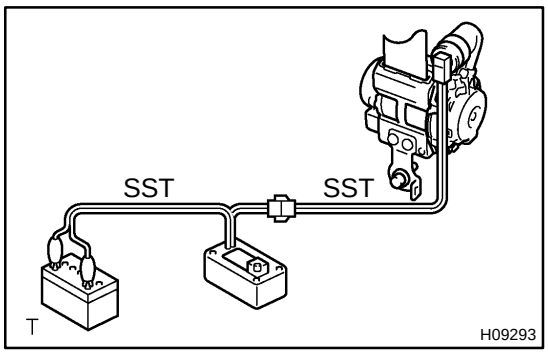

(2) Connect the 2 SST, then connect them to the seat belt pretensioner.

SST 09082–00700, 09082–00770

NOTICE:

To avoid damaging the SST connector and wire harness, do not lock the secondary lock of the twin lock.

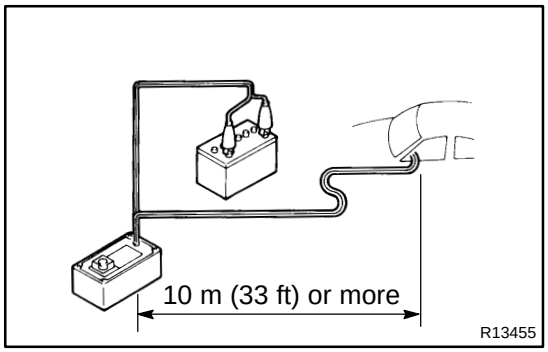

(3) Move the SST to at least 10 m (33 ft) away from the front of the vehicle.

(4) Close all the doors and windows of the vehicle.

NOTICE:

Take care not to damage the SST wire harness.

(5) Connect the SST red clip to the battery positive (+) terminal and the black clip to the negative (–) terminal.

(d) Activate the seat belt pretensioner.

(1) Confirm that no one is inside the vehicle or within 10 m (33 ft) area around of the vehicle.

(2) Press the SST activation switch and activate the seat belt pretensioner.

HINT:

The seat belt pretensioner operates simultaneously as the LED of the SST activation switch lights up.

(e) Dispose of front seat outer belt (with seat belt pretensioner).

CAUTION:

- **The front seat outer belt is very hot when the seat belt pretensioner is activated, so leave it alone for at least 30 minutes after activation.**
- **Use gloves and safety glasses when handling a front seat outer belt with activated seat belt pretensioner.**
- **Always wash your hands with water after completing the operation.**
- **Do not apply water, etc. to a front seat outer belt with activated seat belt pretensioner.**

HINT:

When scrapping a vehicle, activate the seat belt pretensioner and scrap the vehicle with activated front seat outer belt still installed.

2. ACTIVATION WHEN DISPOSING OF FRONT SEAT OUTER BELT ONLY

NOTICE:

- **When disposing of the front seat outer belt (with seat belt pretensioner) only, never use the customer's vehicle to activate the seat belt pretensioner.**
- **Be sure to follow the procedure given on the next page when activating the seat belt pretensioner.**

HINT:
Have a battery ready as the power source when activating the seat belt pretensioner.
(a) Remove the front seat outer belt (See page BO–103).
HINT:
Cut the belt near the seat belt retractor.

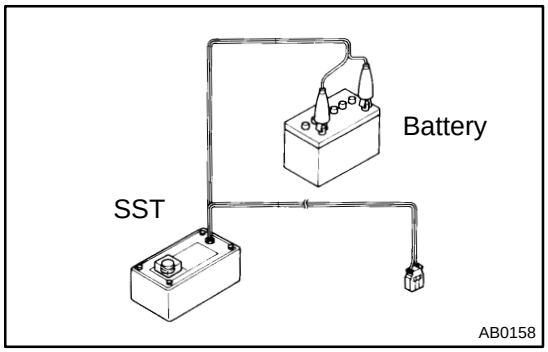

(b) Check functioning of SST.
(See step 1–(a))
SST 09082–00700, 09082–00770

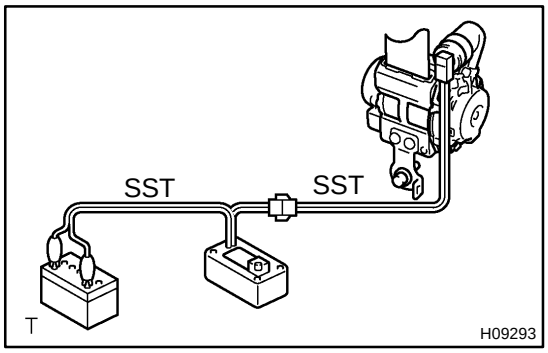

(c) Install the SST.
(1) Connect the 2 SST, then connect them to the seat belt pretensioner.
SST 09082–00700, 09082–00770

NOTICE:
To avoid damaging the SST connector and wire harness, do not lock the secondary lock of the twin lock.

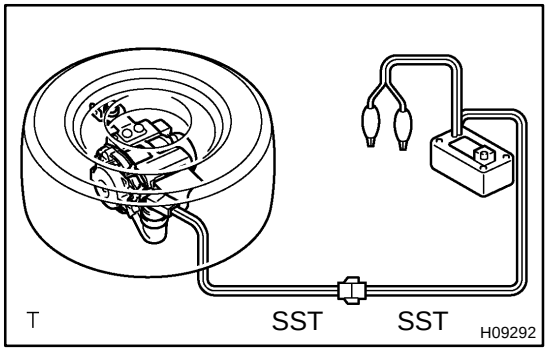

(2) Place the front seat outer belt on the ground and cover it with the disc wheel with tire.

NOTICE:
Place the front seat outer belt as shown in the illustration.

(3) Move the SST as least 10 m (33 ft) away from the disc wheel.

NOTICE:
Take care not to damage the SST wire harness.

(d) Activate the seat belt pretensioner.
(1) Connect the SST red clip to the battery positive (+) terminal and black clip to the battery negative (–) terminal.
(2) Check that no one is within 10 m (33 ft) area around the disc wheel.
(3) Press the SST activation switch and activate the seat belt pretensioner.

HINT:
The seat belt pretensioner operates simultaneously as the LED of the SST activation switch lights up.

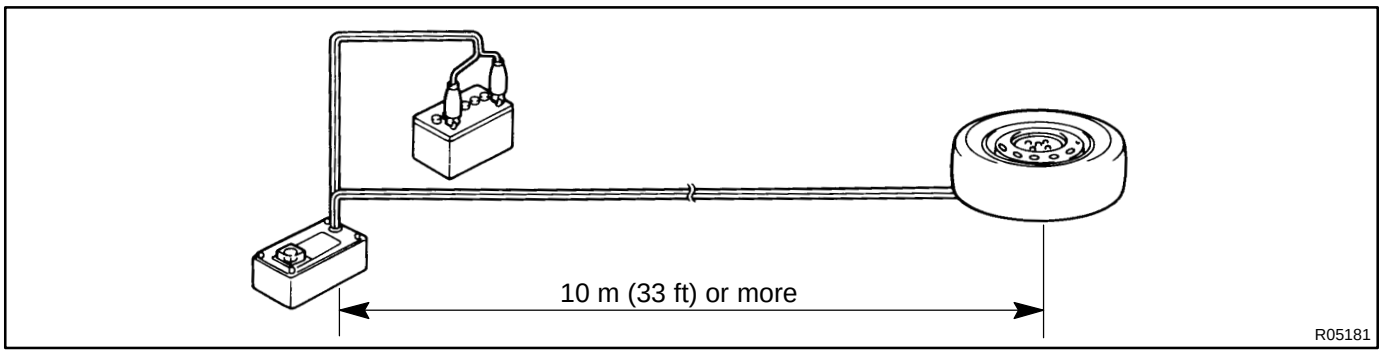

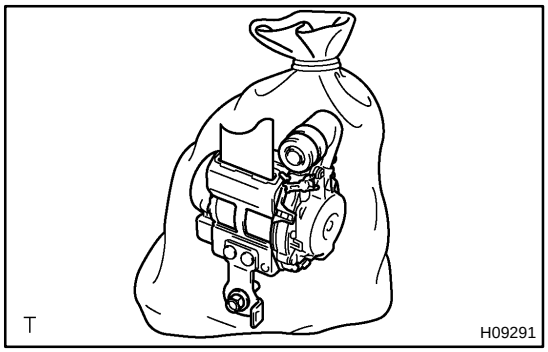

(e) Dispose of front seat outer belt (with seat belt pretensioner).

CAUTION:

- **The front seat outer belt is very hot when the seat belt pretensioner is activated, so leave it alone for at least 30 minutes after activation.**
- **Use gloves and safety glasses when handling a front seat outer belt with activated seat belt pretensioner.**
- **Always wash your hands with water after completing the operation.**
- **Do not apply water, etc. to a front seat outer belt with activated seat belt pretensioner.**

(1) Remove the disc wheel and SST.

(2) Place the front seat outer belt in a vinyl bag, tie the end tightly and dispose of it in the same way as other general parts.

BO42O–01

INSPECTION

CAUTION:

For removal and installation of the seat belt pretensioner, see page BO–108 and BO–115.

Be sure to follow the correct procedure.

1. PRETENSIONER IS NOT ACTIVATED

(a) Perform a diagnostic system check (See page DI–588).

(b) Perform a visual check which includes the following items with the front seat outer belt removed from the vehicle.

- Regular cab, Extra cab:
  Check for cuts and cracks in, or marked discoloration on the quarter trim.
- Double cab:
  Check for cuts and cracks in, or marked discoloration on the center pillar and quarter trim.
- Check for cuts and cracks in wire harness, and for chipping in connectors.
- Regular cab, Extra cab:
  Check for deformation of the quarter panel.
- Double cab:
  Check for deformation of the center pillar.
- Check for cuts miute cracks in wire harness or marked discoloration on the front seat outer belt.

2. PRETENSIONER IS ACTIVATED

(a) Perform a diagnostic system check (See page DI–588).

(b) Perform a visual check which includes the following items with the front seat outer belt removed from the vehicle.

- Regular cab, Extra cab:
  Check for deformation of the quarter panel.
- Double cab:
  Check for deformation of the center pillar.
- Check for damage on the connector and wire harness.

3. REPLACE SEAT BELT WITH PRETENTIONER

In the following cases, replace the seat belt with pretentioner.

- Seat belt pretensioner has been activated.
- Seat belt pretensioner has been found to be faulty in troubleshooting.
- Front seat outer belt has been found to be faulty in test on page BO–106.
- Front seat outer belt has been dropped.

BO42Q–01

INSTALLATION

Installation is in the reverse order of removal procedure (See page BO–108).

SEAT BELT PRETENSIONER

BO42N–01

REMOVAL

CAUTION:

- **When removing the seat belt pretensioner, work must be started 90 seconds after the ignition switch is turned to the ”LOCK” position and the negative (–) terminal cable is disconnected from the battery.**
- **Never disassemble the front seat outer belt.**
- **Never use seat belt pretensioner from another vehicle. When replacing parts, replace new one.**

REMOVE FRONT SEAT OUTER BELT

(a) Regular cab, Extra cab:
Remove the quarter trim (See page BO–60, BO–63).

(b) Double cab:
Remove the center pillar (See page BO–68).

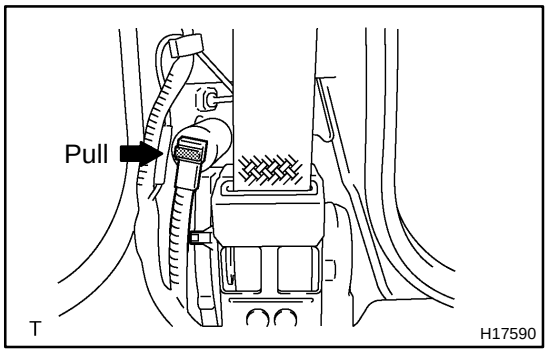

(c) Pull the locking button and disconnect the pretensioner connector.

(d) Remove the 2 bolts and front seat outer belt with the pretensioner.
Torque:
36 N·m (365 kgf·cm, 27 ft·lbf) for upper bolt
42 N·m (430 kgf·cm, 31 ft·lbf) for lower bolt

SEAT BELT

COMPONENTS

BO42M–01

Separate Seat for Regular Cab:

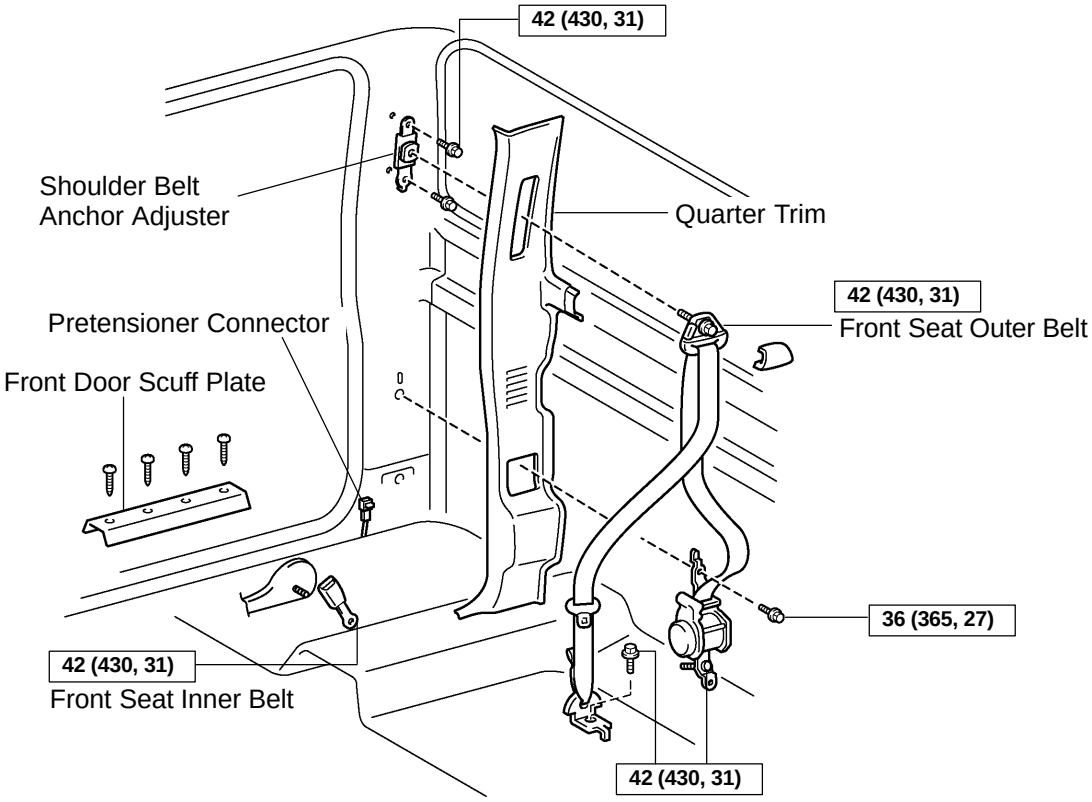

Inner Belt for Bench Seat:

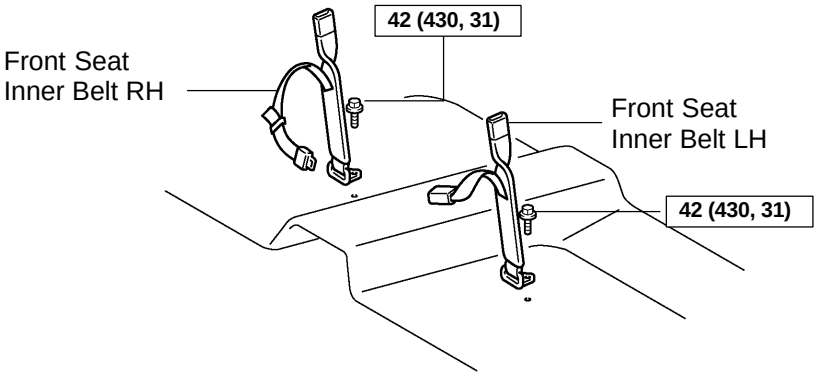

T

N·m (kgf·cm, ft·lbf) : Specified torque

H17585

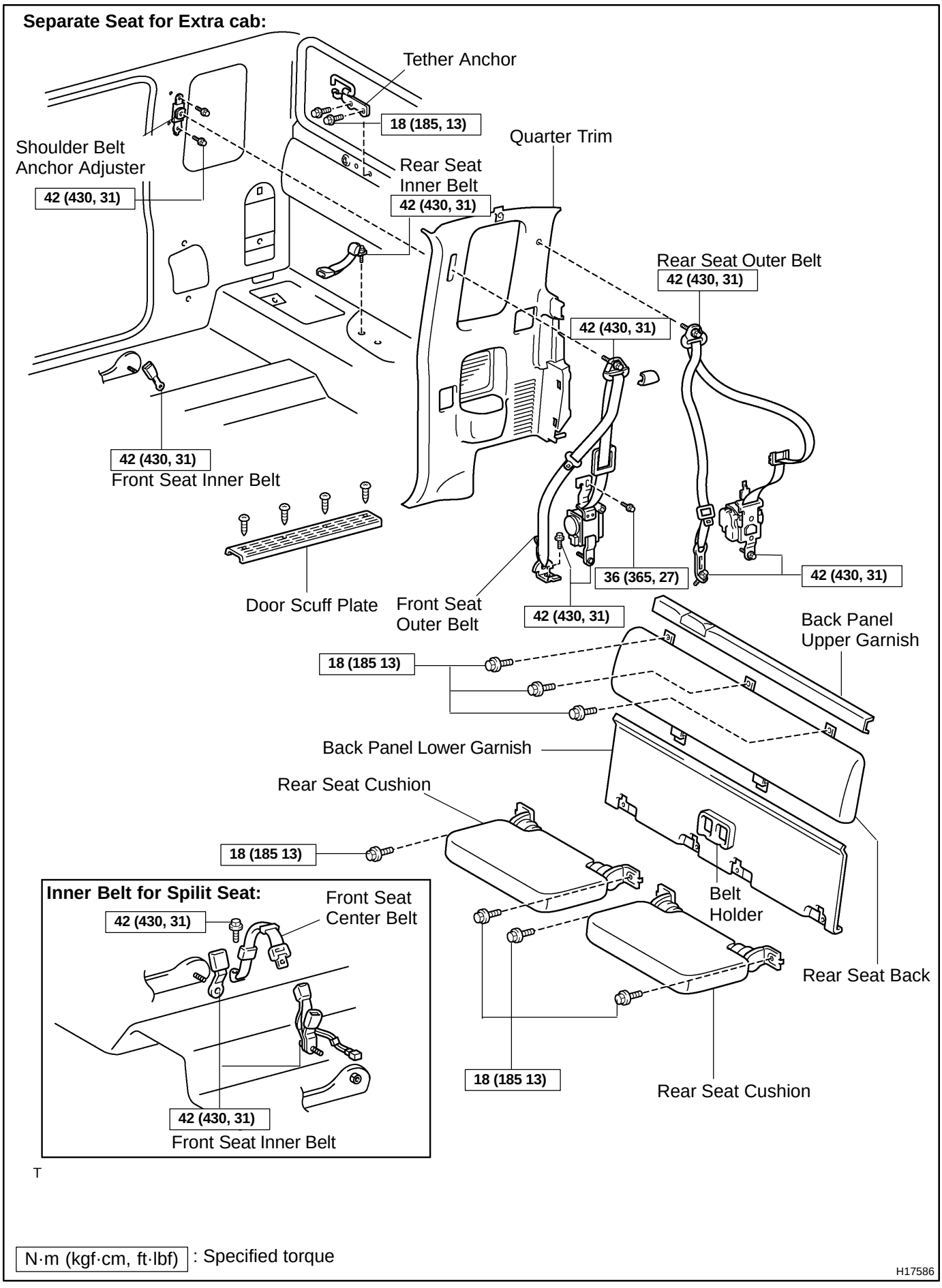
Separate Seat for Extra cab:
Tether Anchor
18 (185, 13)
Quarter Trim
Shoulder Belt Anchor Adjuster
42 (430, 31)
Rear Seat Inner Belt
42 (430, 31)
Rear Seat Outer Belt
42 (430, 31)
42 (430, 31)
42 (430, 31)
Front Seat Inner Belt
Door Scuff Plate
Front Seat Outer Belt
36 (365, 27)
42 (430, 31)
42 (430, 31)
Back Panel Upper Garnish
18 (185 13)
Back Panel Lower Garnish
Rear Seat Cushion
18 (185 13)
Belt Holder
Rear Seat Back
Inner Belt for Spilit Seat:
Front Seat Center Belt
42 (430, 31)
42 (430, 31)
Front Seat Inner Belt
18 (185 13)
Rear Seat Cushion
T
N·m (kgf·cm, ft·lbf) : Specified torque
H17586

Double Cab:

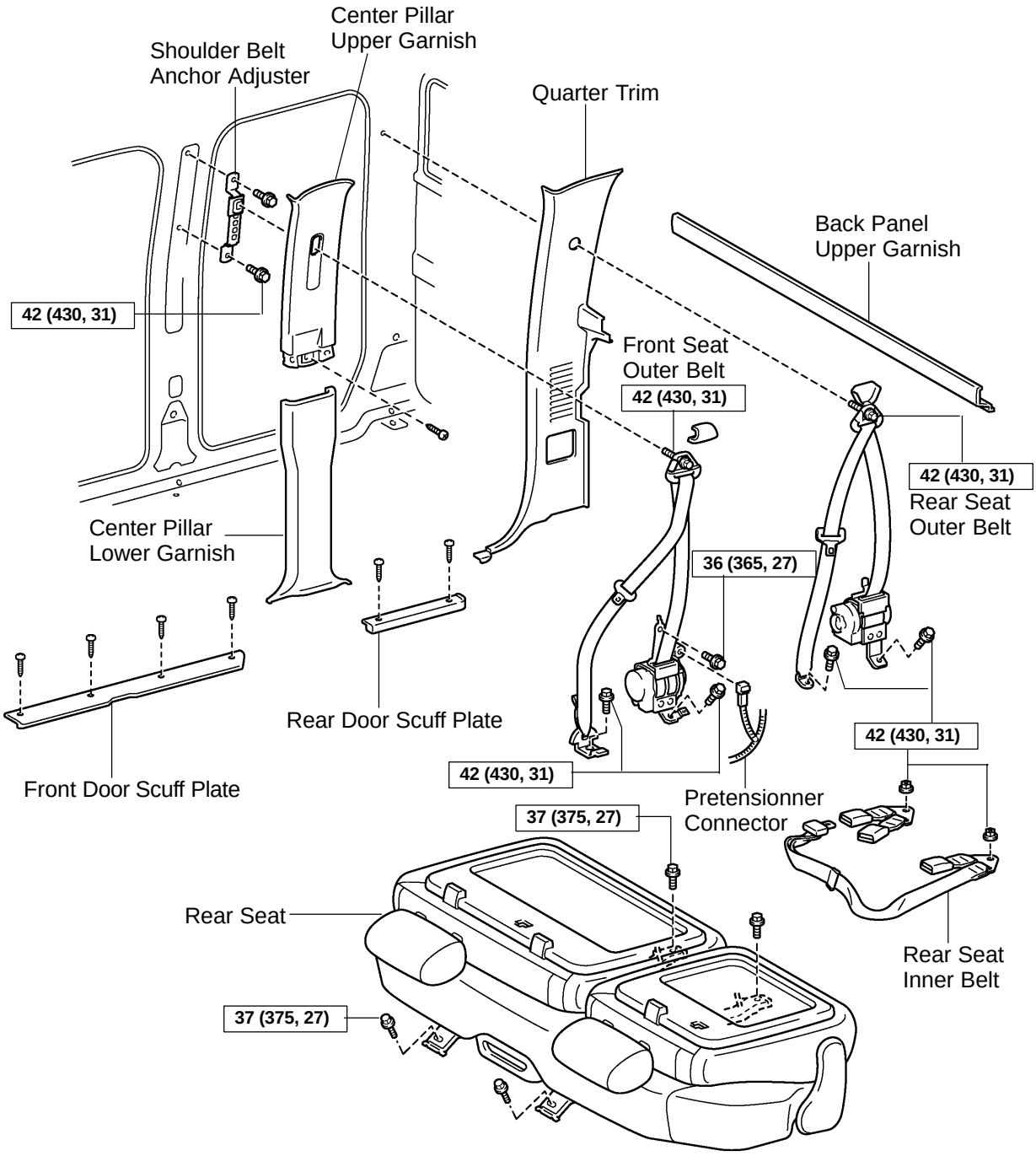

N·m (kgf·cm, ft·lbf) : Specified torque

H17587

BO091–03

INSPECTION

CAUTION:

Replace the seat belt assembly (outer belt, inner belt, bolts, nuts or sill–bar) if it has been used in a severe impact. The entire assembly should be replaced even if damage is not obvious.

1. Except manual type:

RUNNING TEST (IN SAFE AREA)

(a) Fasten the front seat belts.

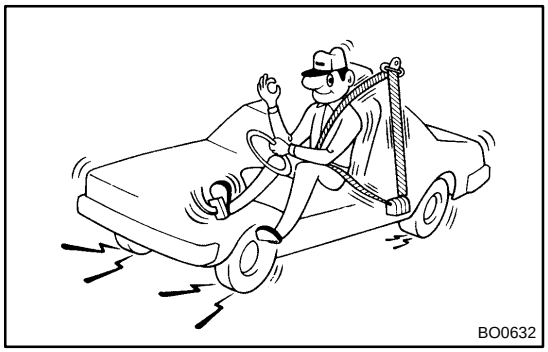

BO0632

(b) Drive the car at 10 mph (16 km/h) and slam on the brakes. Check that the belt locks and cannot be extended at this time.

HINT:

Conduct this test in a safe area. If the belt does not lock, remove the belt mechanism assembly and conduct the following static check. Also, whenever installing a new belt assembly, verify the proper operation before installation.

2. Driver's seat belt (ELR):

STATIC TEST

(a) Make sure that the belt locks when pulled out quickly.

(b) Remove the locking retractor assembly.

(c) Tilt the retractor slowly.

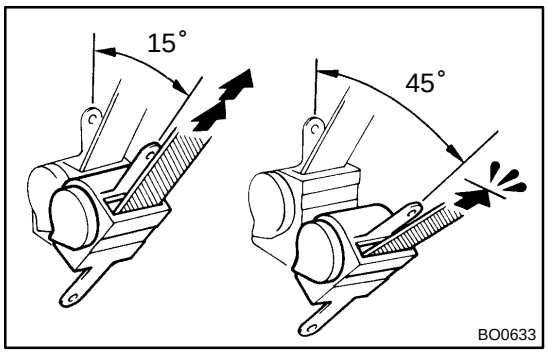

BO0633

(d) Make sure that the belt can be pulled out at a tilt of 15 degrees or less, and cannot be pulled out over 45 degrees of tilt.

If a problem is found, replace the assembly.

3. Except driver's seat belt (ALR/ELR):

STATIC TEST

(a) Make sure that the belt locks when pulled out quickly.

(b) Remove the locking retractor assembly.

(c) Pull out the whole belt and measure the length of the whole belt.

Then retract the belt slightly and pull it out again

(d) Make sure that the belt cannot be extended further.

If a problem is found, replace the assembly.

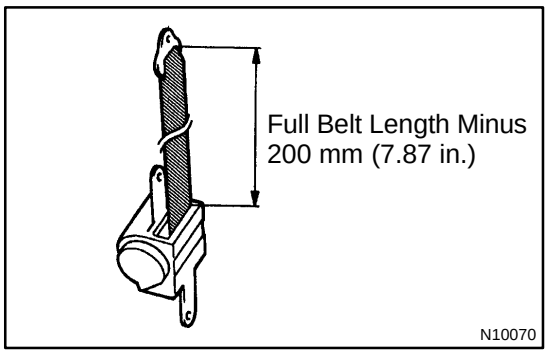

(e) Retract the whole belt, then pull out the belt until 200 mm (7.87 in.)of belt remains retracted.
(f) Tilt the retractor slowly.

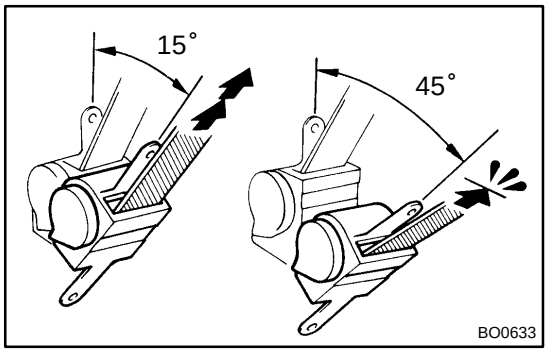

(g) Make sure that the belt can be pulled out at a tilt of 15 degrees or less, and cannot be pulled out at over 45 degrees of tilt.

If a problem is found, replace the assembly.

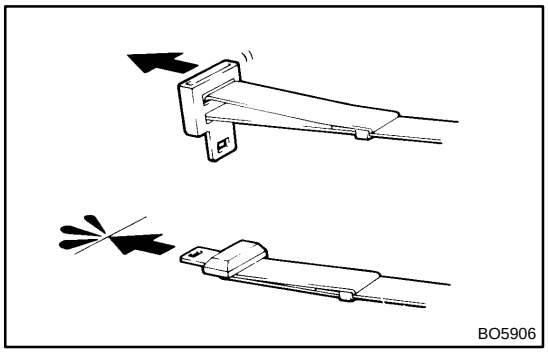

4. Manual type:
TESTING

(a) Adjust the belt to the proper length.
(b) Apply a firm load to the belt.
(c) Make sure that the belt does not extend.

SRS AIRBAG

BO2Z1–01

PRECAUTION

The TOYOTA TACOMA is equipped with an SRS (Supplemental Restraint System) such as the driver airbag and front passenger airbag. Failure to carry out service operation in the correct sequence could cause the SRS to unexpectedly deploy during servicing, possibly leading to a serious accident. Before servicing (including removal or installation of parts, inspection or replacement), be sure to read the precautionary notices in the RS section.

TAIL GATE

COMPONENTS

BO07Y–03

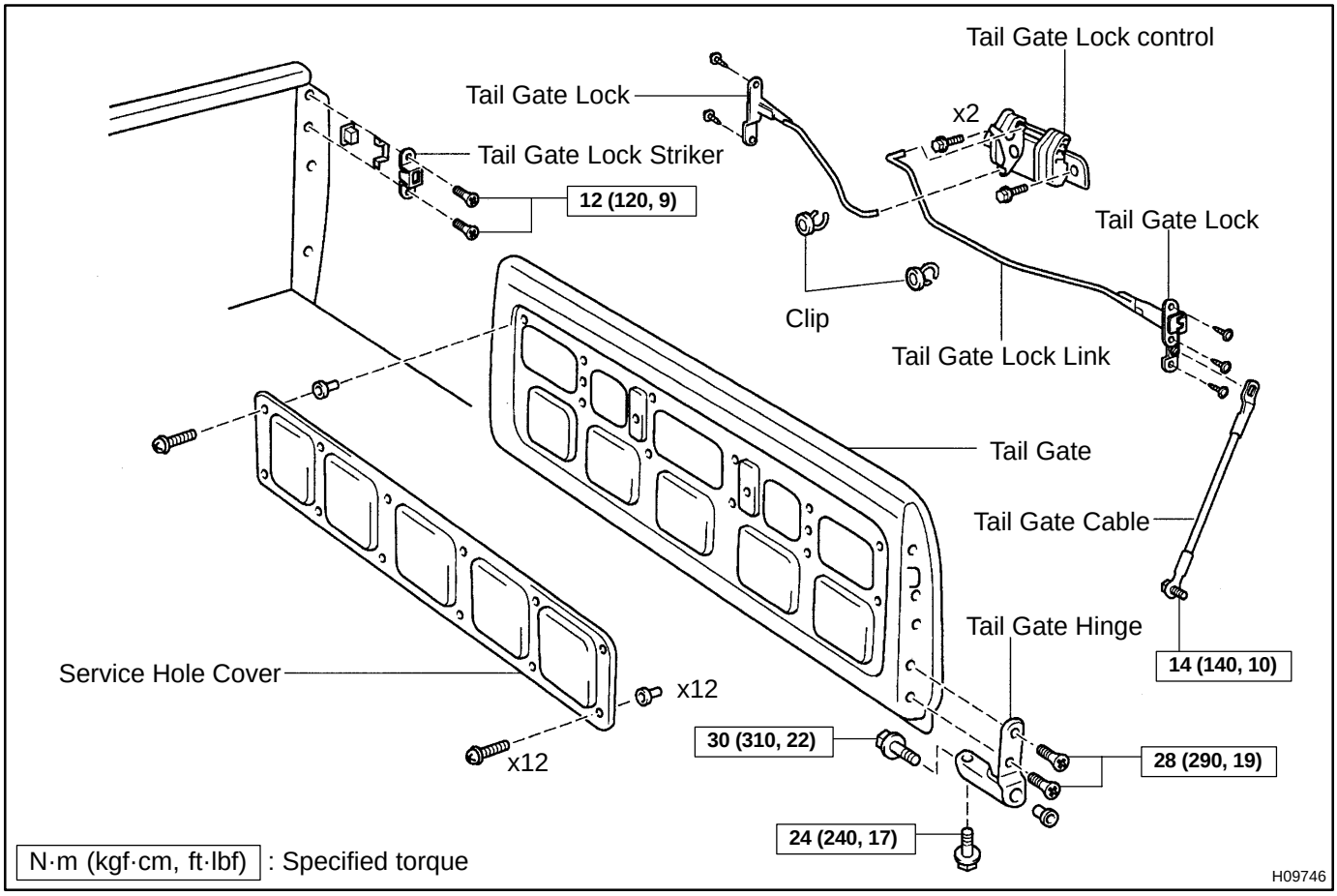

BO080–03

INSTALLATION

Installation is in the reverse order of removal procedure (See page BO–57).

BO07Z–03

REMOVAL

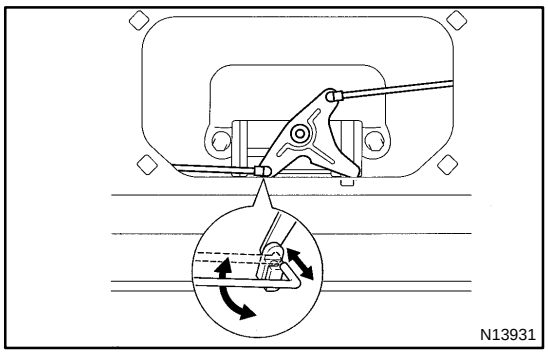

1. REMOVE SERVICE HOLE COVER

Remove the 12 screws and service hole cover.

2. DISCONNECT TALE GATE LOCK LINK FROM TAIL GATE LOCK CONTROL

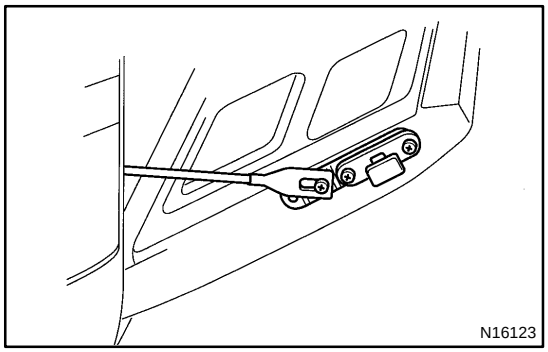

3. REMOVE TAIL GATE CABLE

(a) Disconnect the tail gate cable from the tail gate.

(b) Remove the bolt and tail gate cable from the body.

(c) Employ the same manner described above to the other side.

Torque: 14 N·m (140 kgf·cm, 10 ft·lbf)

4. REMOVE TAIL GATE LOCK FROM TAIL GATE

(a) Remove the 2 screws and tail gate lock.

(b) Employ the same manner described above to the other side.

5. REMOVE TAIL GATE LOCK STRIKERS

Remove the 4 screws and tail gate lock strikers.

Torque: 12 N·m (120 kgf·cm, 9 ft·lbf)

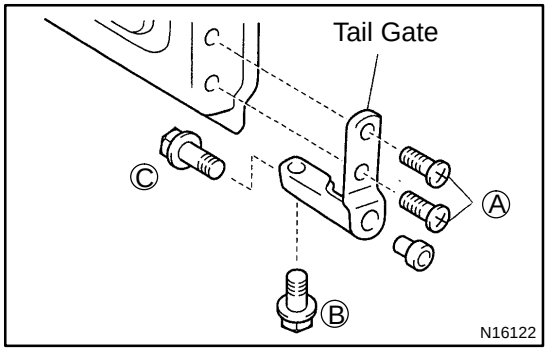

6. REMOVE TAIL GATE

Remove the 4 screws and tail gate.

Torque:

28 N·m (290 kgf·cm, 19 ft·lbf) for A

7. REMOVE TAIL GATE HINGES

Remove the 2 bolts and tail gate hinge.

Torque:

30 N·m (310 kgf·cm, 22 ft·lbf) for B

24 N·m (290 kgf·cm, 19 ft·lbf) for C

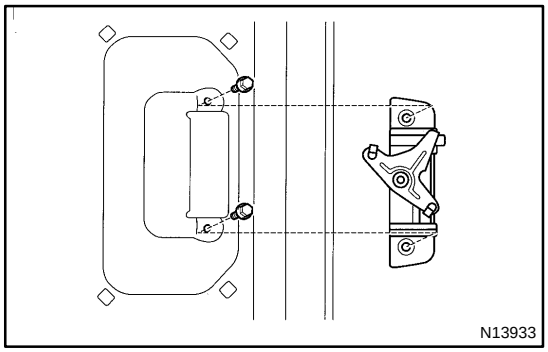

8. REMOVE TAIL GATE LOCK CONTROL

Remove the 2 bolts and tail gate lock control.

WINDSHIELD

COMPONENTS

BO07F–02

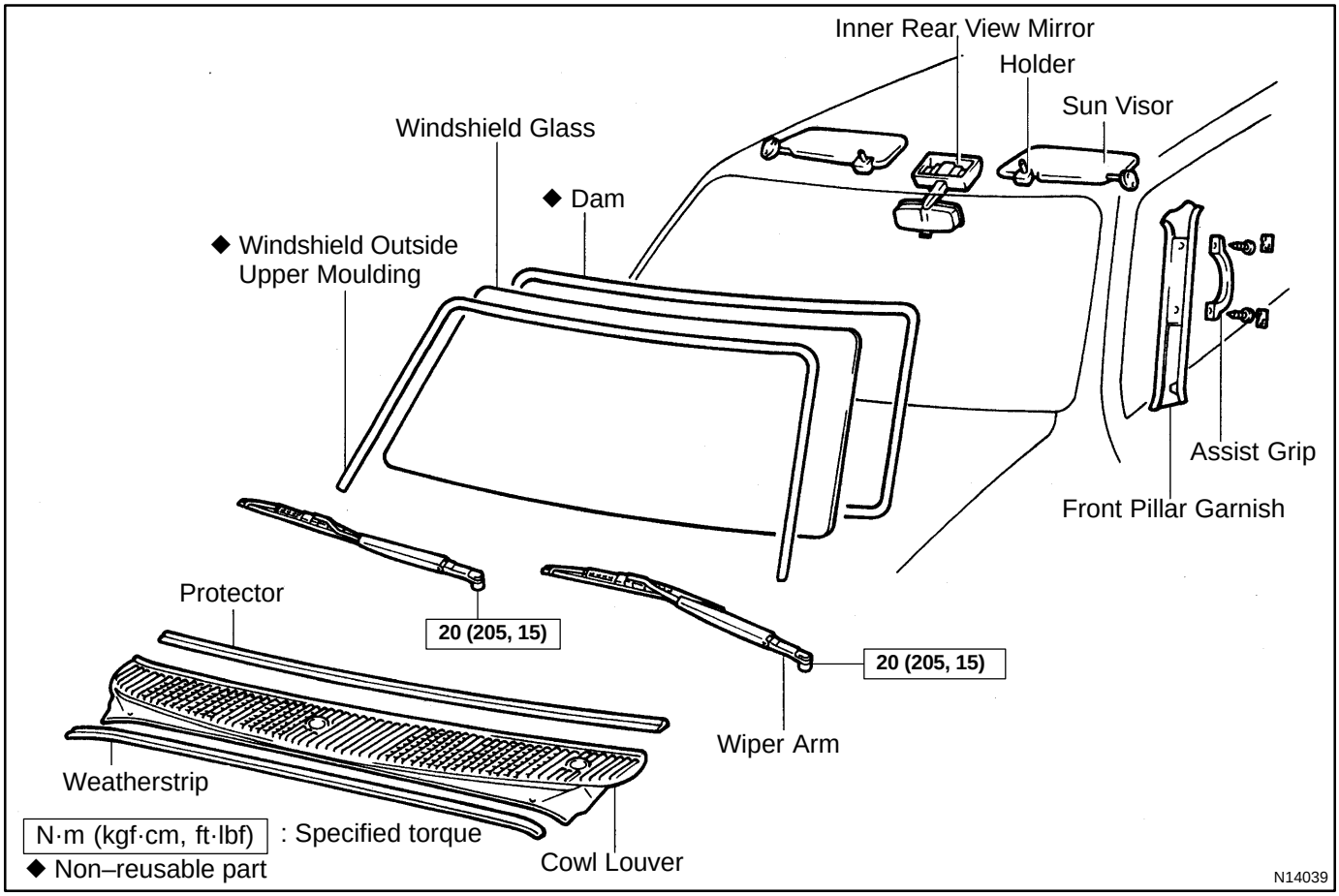

BO07H–02

INSTALLATION

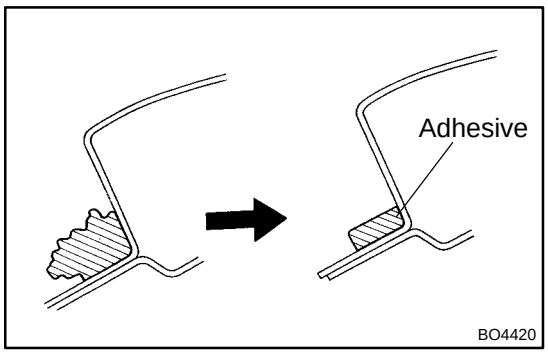

1. CLEAN AND SHAPE CONTACT SURFACE OF BODY

(a) Using a knife, cut away any rough areas on the body.

HINT:

Leave as much of the adhesive on the body as possible.

(b) Clean the cutting surface of the adhesive with a piece of shop rag saturated in a cleaner.

HINT:

Even if all the adhesive has been removed, clean the body.

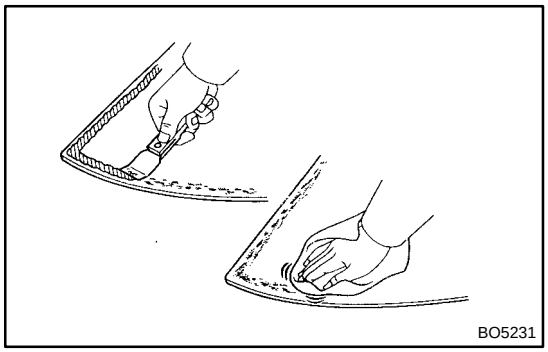

2. CLEAN REMOVED GLASS

(a) Remove the damaged dam.

(b) Using a scraper, remove the adhesive sticking to the glass.

(c) Clean the glass with a cleaner.

NOTICE:

- **Be careful not to damage the glass.**
- **Do not touch the glass after cleaning it.**

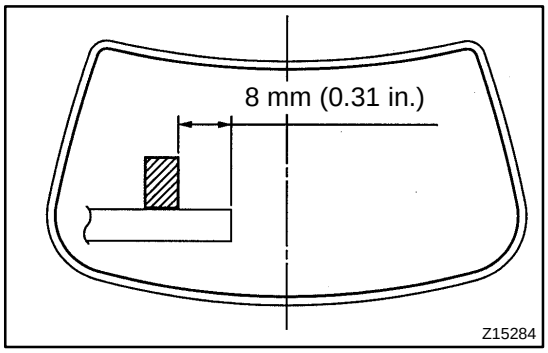

3. INSTALL NEW DAM

Install a new dam with the double – stick tape as shown in the illustration.

NOTICE:

Do not touch the glass face after cleaning it.

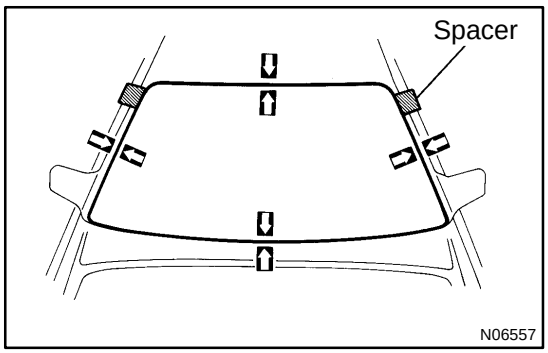

4. POSITION GLASS

(a) Place the glass in the correct position.

(b) Check that all contacting parts of the glass rim are perfectly even and do not make contact with the spacers.

(c) Place reference marks between the glass and body.

(d) Remove the glass.

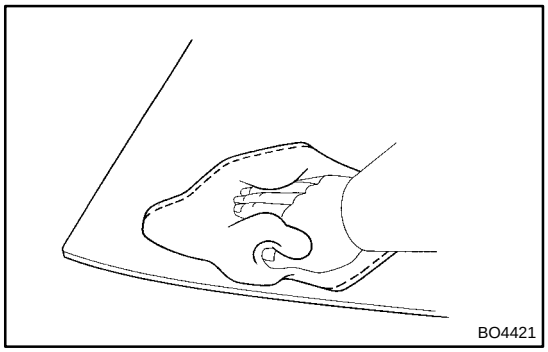

5. CLEAN CONTACT SURFACE OF GLASS

Using a cleaner, clean the contact surface which is black–colored area around the entire glass rim.

NOTICE:

Do not touch the glass face after cleaning it.

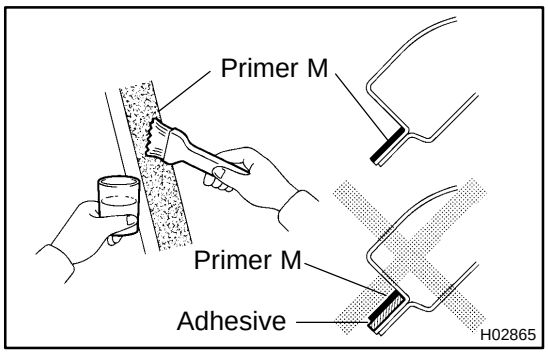

6. COAT CONTACT SURFACE OF BODY WITH PRIMER "M"

Using a brush, coat Primer M to the exposed part of body on the vehicle side.

NOTICE:

- **Let the primer coating dry for 3 minutes or more.**
- **Do not coat Primer M to the adhesive.**
- **Do not keep any of the opened Primer M for later use.**

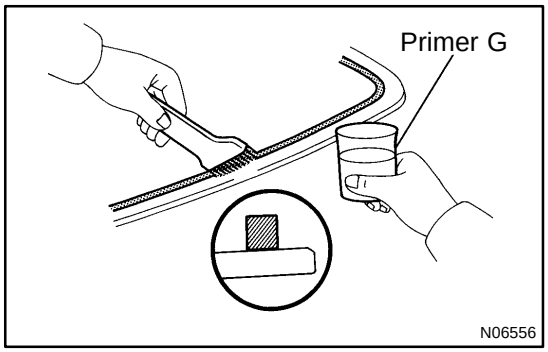

7. COAT CONTACT SURFACE OF GLASS WITH PRIMER "G"

(a) Using a brush or sponge, coat the edge of the glass and the contact surface with Primer G.

(b) When the primer is coated wrongly to the area other than the specified, wipe it off with a clean shop rag before the primer dries.

NOTICE:

- **Let the primer coating dry for 3 minutes or more.**
- **Do not keep any of the opened Primer G for later use.**

8. APPLY ADHESIVE

(a) Cut off the tip of the cartridge nozzle.

Part No.08850–00801 or equivalent

HINT:

After cutting off the tip, use all adhesive within the time described in the table below.

Temperature	Tackfree time
35 ˚C (95 ˚F)	15 minutes
20 ˚C (68 ˚F)	100 minutes
5 ˚C (41 ˚F)	8 hours

(b) Load the cartridge into the sealer gun.

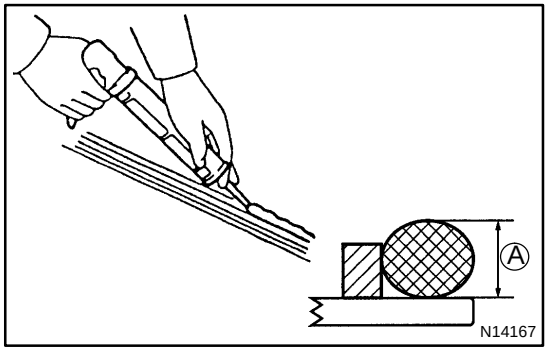

(c) Coat the glass with adhesive, as shown in the illustration.

Adhesive height:

A: 8.0 – 10 mm (0.31 – 0.39 in.)

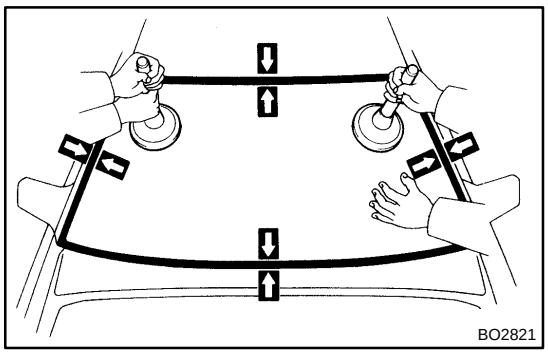
BO2821

9. INSTALL GLASS

(a) Position the glass so that the reference marks are lined up, and press it in gently along the rim.

(b) Using a spatula, apply adhesive on the glass rim.

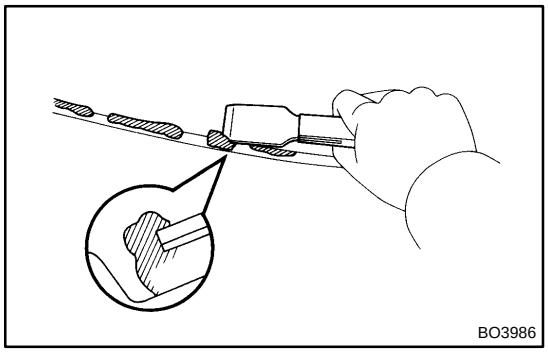
BO3986

(c) Use a scraper to remove any excess or protruding adhesive.

(d) Hold the glass in place securely with a protective tape or equivalent until the adhesive hardened.

NOTICE:

Take care not to drive the vehicle during the time described in the table below.

Temperature	Minimum time prior to driving the vehicle
35 ˚C (95 ˚F)	1.5 hours
20 ˚C (68 ˚F)	5 hours
5 ˚C (41 ˚F)	24 hours

10. INSPECT FOR LEAKS AND REPAIR

(a) Conduct a leak test after the hardening time has elapsed.

(b) Seal any leak with sealant.
Part No. 08833–00030 or equivalent

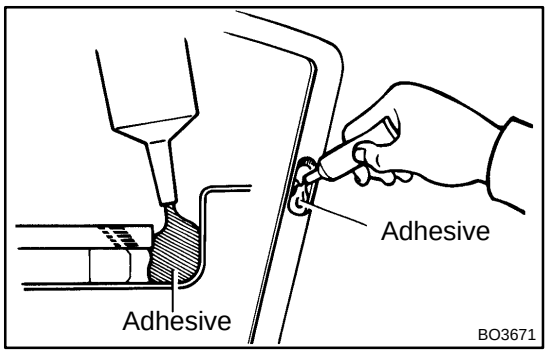

BO3671

11. APPLY ADHESIVE TO MOULDING INSTALLATION AREA

Coat the glass with adhesive at the moulding installation area.
Part No. 08833–00030 or equivalent

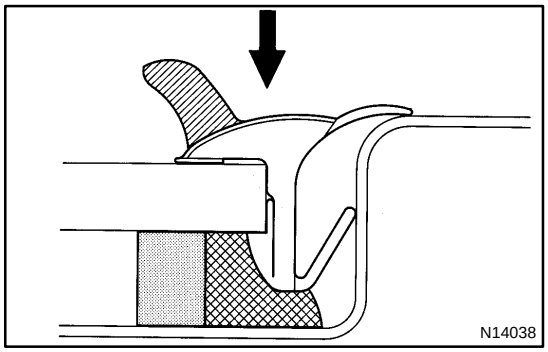
N14038

12. INSTALL NEW WINDSHIELD OUTSIDE UPPER MOULDING

Place new moulding into the body and tap it by hand.

13. INSTALL WIPER ARMS (See page BO–29)
Torque: 20 N·m (205 kgf·cm, 15 ft·lbf)

14. INSTALL COWL LOUVER (See page BO–29)

15. INSTALL FRONT PILLAR GARNISHES

16. INSTALL ASSIST GRIPS

17. INSTALL SUN VISORS AND HOLDERS

18. INSTALL INNER REAR VIEW MIRROR

BO07G–02

REMOVAL

1. REMOVE INNER REAR VIEW MIRROR
2. REMOVE SUN VISORS AND HOLDERS
3. REMOVE ASSIST GRIPS
4. REMOVE QUARTER TRIM (See page BO–45)
5. REMOVE FRONT PILLAR GARNISHES
6. REMOVE COWL LOUVER (See page BO–27)
7. REMOVE WIPER ARMS (See page BO–27)

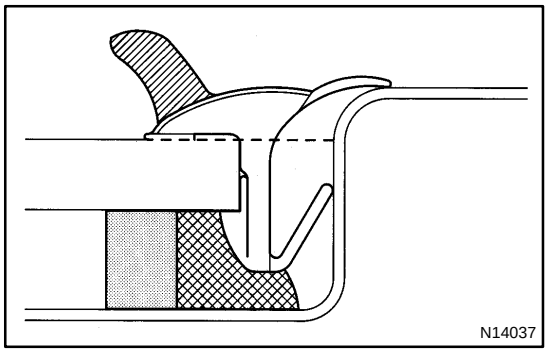

8. REMOVE WINDSHIELD OUTSIDE UPPER MOULDING

(a) Using a knife, cut off the moulding, as shown in the illustration.

NOTICE:

Do not damage the body with the knife.

(b) Remove the remaining moulding.

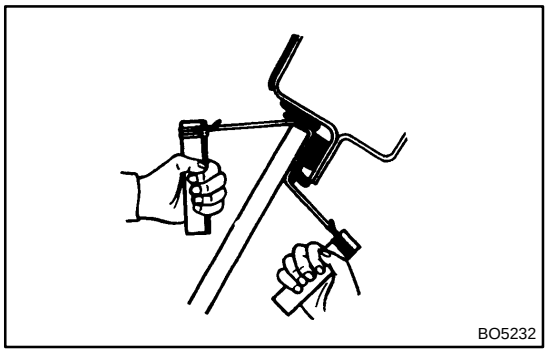

9. REMOVE WINDSHIELD GLASS

(a) Push piano wire through between the body and glass from the interior.

(b) Tie both wire ends to a wooden block or similar object.

HINT:

Apply protective tape to the outer surface to keep the surface from being scratched.

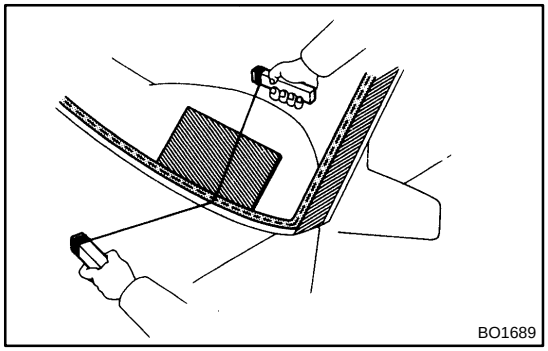

NOTICE:

When separating the glass, take care not to damage the paint and interior and exterior ornaments. To prevent scratching the safety pad when removing the windshield, place a plastic sheet between the piano wire and safety pad.

(c) Cut the adhesive by pulling the piano wire around it.

(d) Remove the glass.

NOTICE:

Leave as much of the adhesive on the body as possible when cutting off the glass.

WHEEL OPENING MOULDING

BO07C–03

COMPONENTS

Large Over Fender

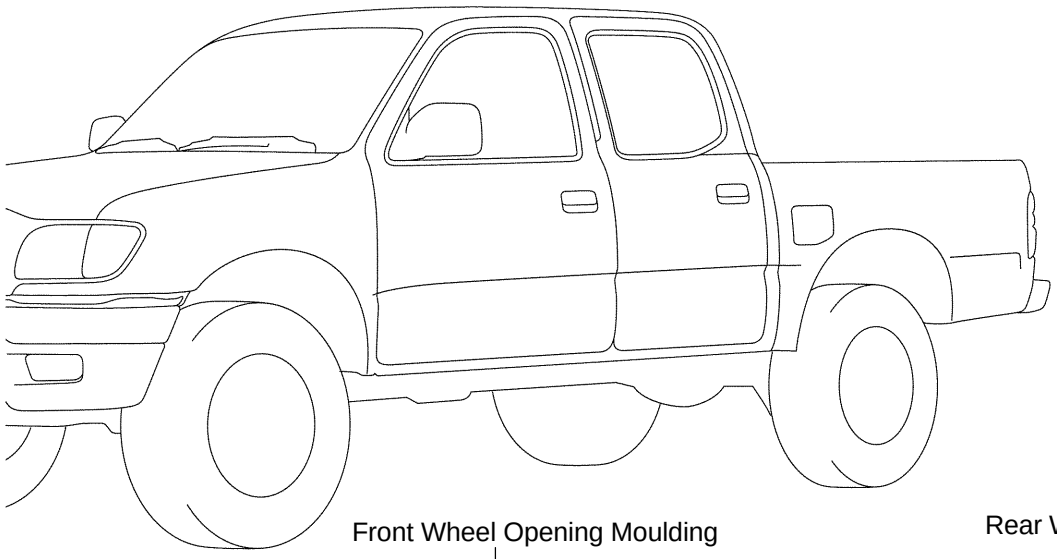

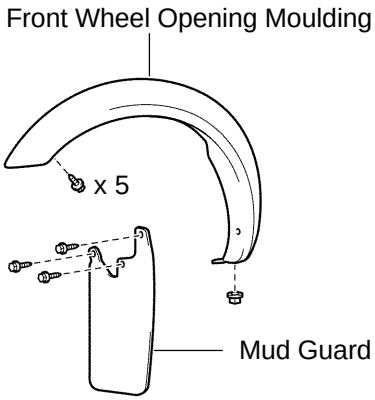

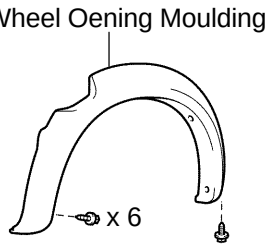

Small Over Fender

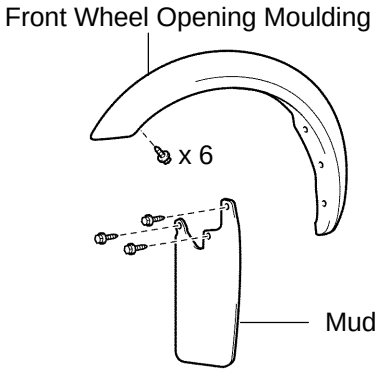

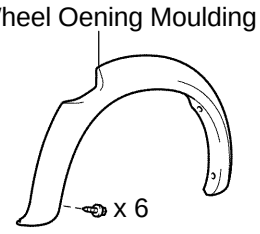

P

H17333

INSTALLATION

Installation is in the reverse order of removal procedure (See page BO–31).

BO07D–03

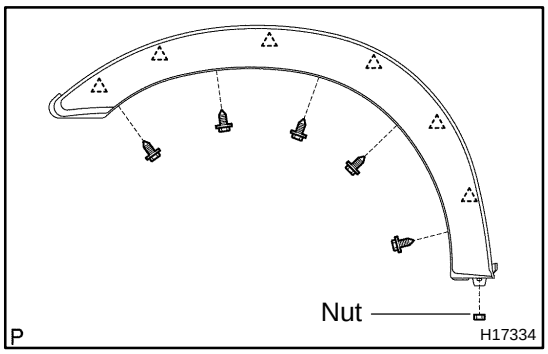

REMOVAL

1. Large Over Fender:

REMOVE FRONT FENDER WHEEL OPENING MOULDING

(a) Remove the 3 bolts and mudguard.

(b) Remove the 5 screws, nut and front fender wheel opening moulding.

2. Small Over Fender:

REMOVE FRONT FENDER WHEEL OPENING MOULDING

(a) Remove the 3 bolts and mudguard.

(b) Remove the 6 screws, nut and front fender wheel opening moulding.

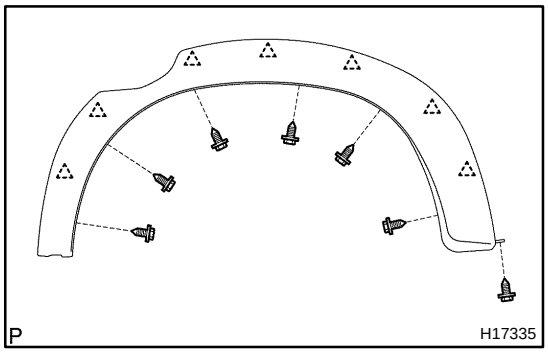

3. Large Over Fender:

REMOVE QUARTER WHEEL OPENING MOULDING

Remove the 7 screws and quarter wheel opening moulding.

4. Small Over Fender:

REMOVE QUARTER WHEEL OPENING MOULDING

Remove the 6 screws and quarter wheel opening moulding.

ABS ACTUATOR

COMPONENTS

BR05P–04

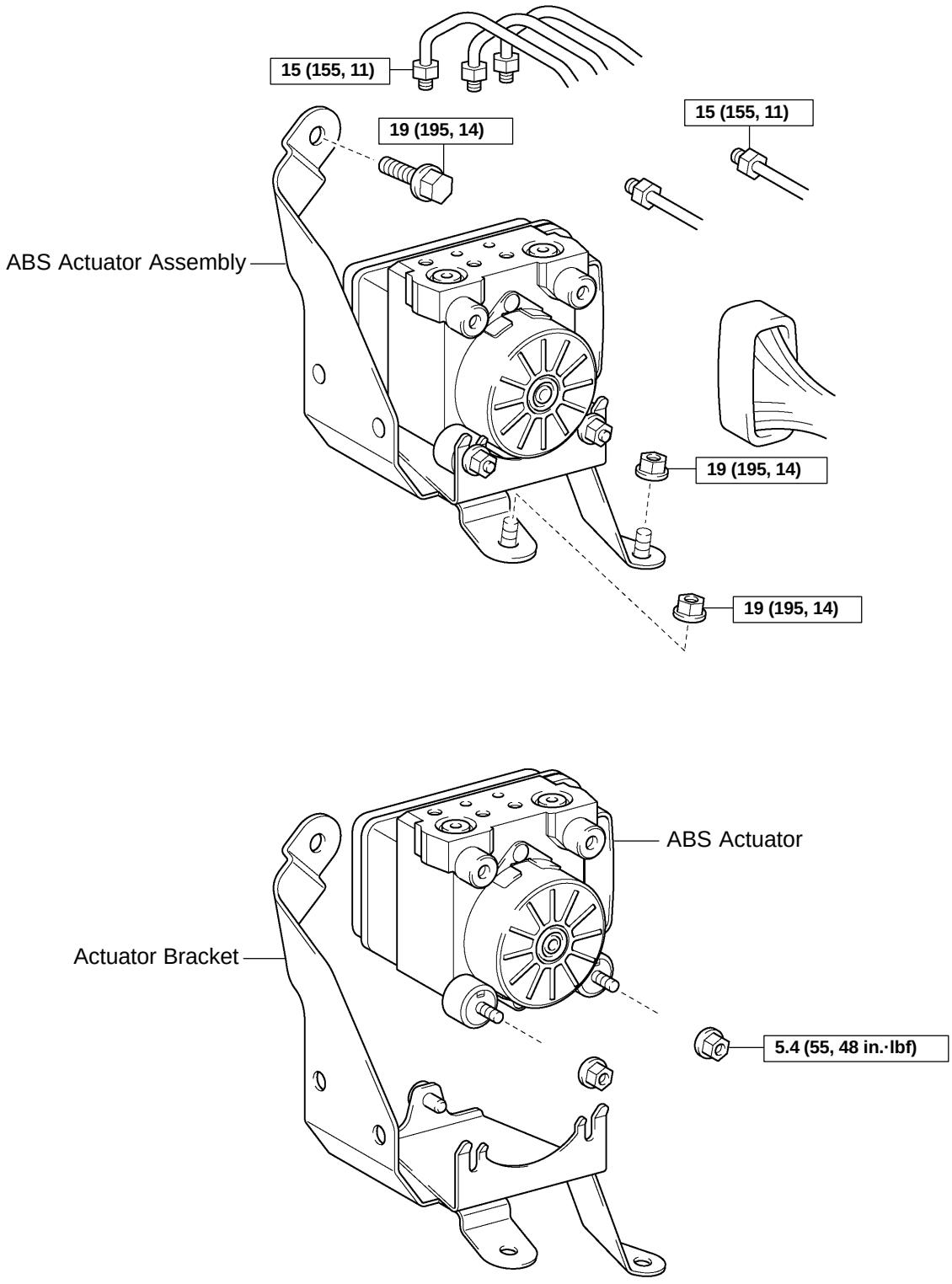

Y N·m (kgf·cm, ft·lbf) : Specified torque

F17459

BR05T–02

INSTALLATION

Installation is in the reverse order of removal (See page BR–56).

HINT:

After installation, fill the brake reservoir with brake fluid, bleed brake system (See page BR–4) and check for leaks.

BR1UY–01

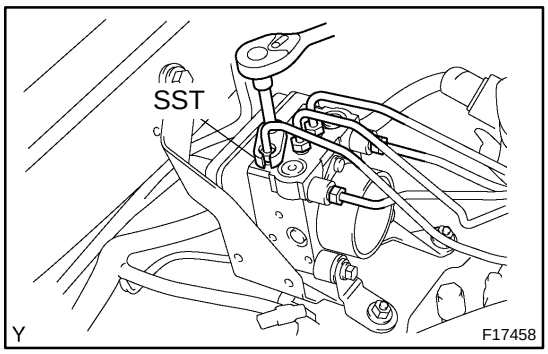

REMOVAL

1. DISCONNECT CONNECTOR

2. DISCONNECT BRAKE LINES

Using SST, disconnect the 5 brake lines from the ABS actuator.

SST 09023–00100

Torque: 15 N·m (155 kgf·cm, 11 ft·lbf)

3. REMOVE ABS ACTUATOR ASSEMBLY

Remove the bolt, 2 nuts and ABS actuator assembly.

Torque: 19 N·m (195 kgf·cm, 14 ft·lbf)

4. REMOVE ABS ACTUATOR

Remove the 2 nuts and the ABS actuator.

Torque: 5.4 N·m (55 kgf·cm, 48 in.·lbf)

BR04R–03

COMPONENTS

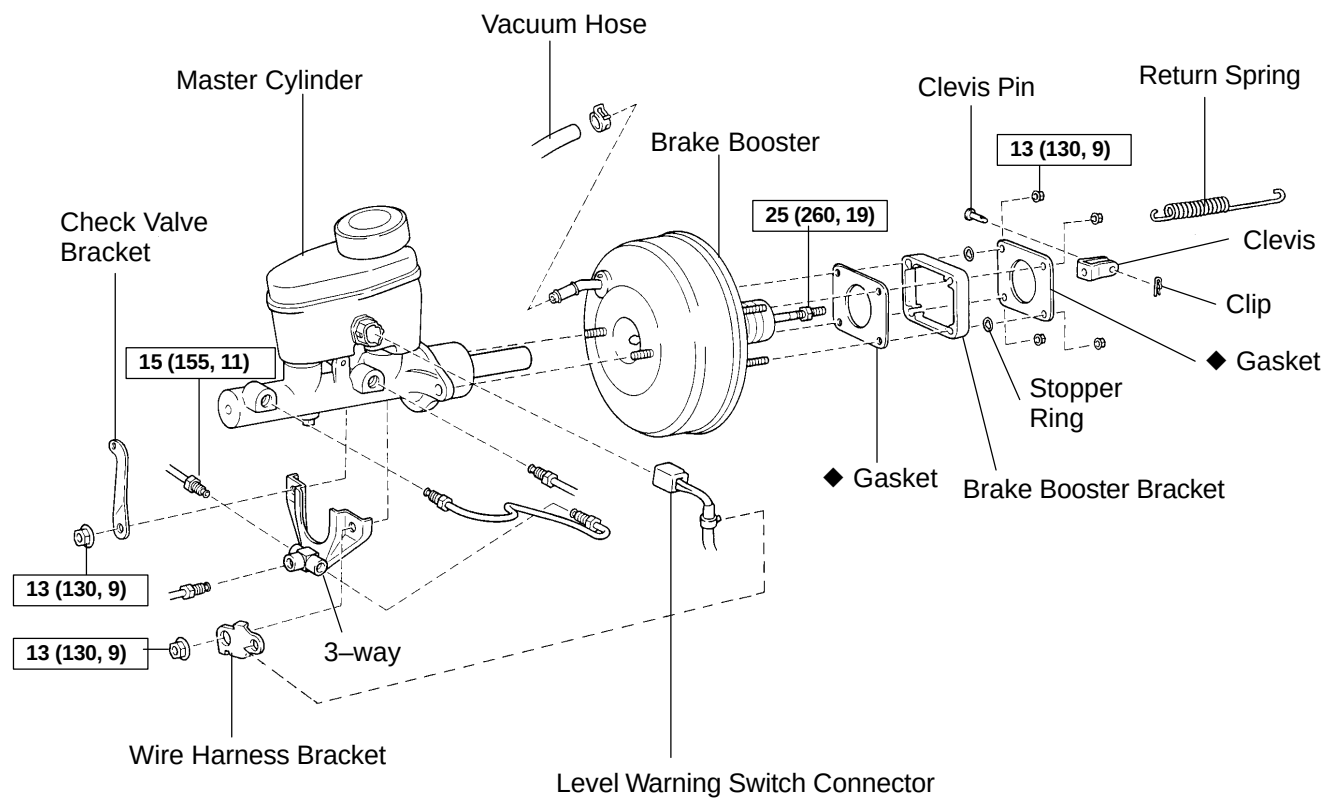

N·m (kgf·cm, ft·lbf) : Specified torque

N ◆ Non–reusable part

F13498

BR1MP–01

INSTALLATION

1. INSTALL BRAKE BOOSTER

(a) Install a new gasket to the brake booster.

(b) Install the brake booster bracket and 2 stopper rings to the brake booster.

(c) Install a new gasket and the booster with the 4 nuts.
Torque: 13 N·m (130 kgf·cm, 9 ft·lbf)

(d) Install the clevis to the operating rod.

(e) Install the clevis pin into the clevis and brake pedal, and install the clip to the clevis pin.

(f) Connect the vacuum hose to the brake booster.

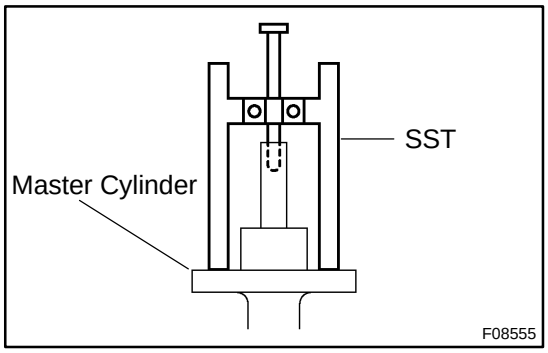

2. ADJUST LENGTH OF BOOSTER PUSH ROD

(a) Set the SST on the master cylinder, and lower the pin until its tip slightly touches the piston.
SST 09737–00011

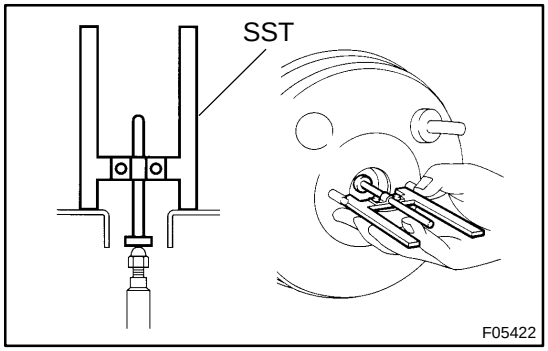

(b) Turn the SST upside down, and set it on the booster.
SST 09737–00011

(c) Measure the clearance between the booster push rod and pin head (SST).
Clearance: 0 mm (0 in.)

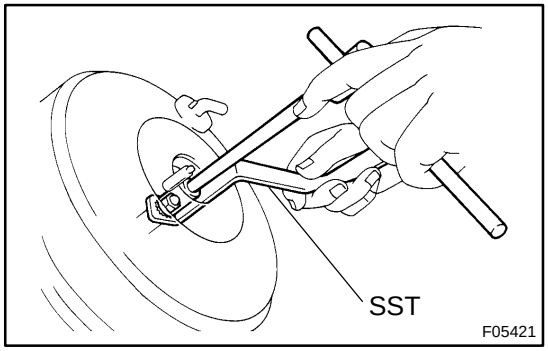

(d) Using SST, adjust the booster push rod length until the push rod lightly touches the pin head.
SST 09737–00020

3. INSTALL MASTER CYLINDER (See page BR–14)

4. FILL BRAKE RESERVOIR WITH BRAKE FLUID AND BLEED BRAKE SYSTEM (See page BR–4)

5. CHECK FOR FLUID LEAKAGE

6. CHECK AND ADJUST BRAKE PEDAL (See page BR–6)

7. DO OPERATIONAL CHECK (See page BR–15)

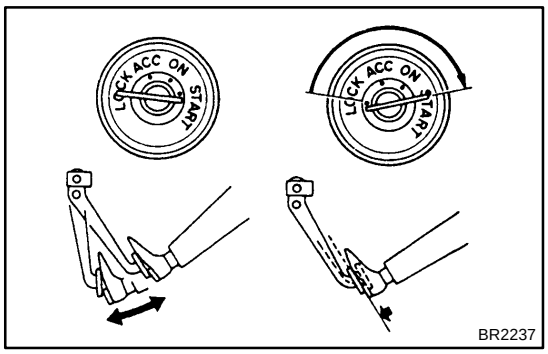

BRAKE BOOSTER ASSEMBLY

BR04Q–01

ON–VEHICLE INSPECTION

1. OPERATING CHECK

(a) Depress the brake pedal several times with the engine off and check that there is no change in the pedal reserve distance.

(b) Depress the brake pedal and start the engine. If the pedal goes down slightly, operation is normal.

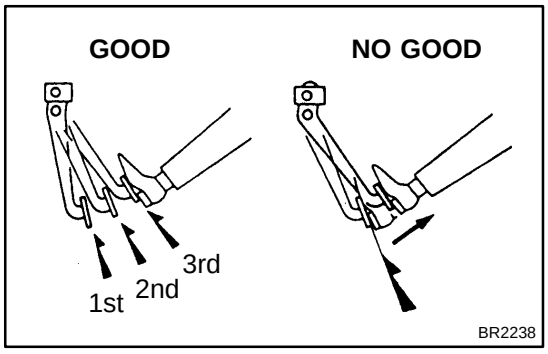

2. AIR TIGHTNESS CHECK

(a) Start the engine and stop it after 1 or 2 minutes. Depress the brake pedal several times slowly.

If the pedal goes down farthest the 1st time, but gradually rises after the 2nd or 3rd time, the booster is air tight.

(b) Depress the brake pedal while the engine is running, and stop the engine with the pedal depressed. If there is no change in the pedal reserve travel after holding the pedal for 30 seconds, the booster is air tight.

BR04S–03

REMOVAL

1. **REMOVE MASTER CYLINDER (See page BR–10)**
2. **DISCONNECT VACUUM HOSE FROM BRAKE BOOSTER**
3. **REMOVE PEDAL RETURN SPRING**
4. **REMOVE CLIP AND CLEVIS PIN**

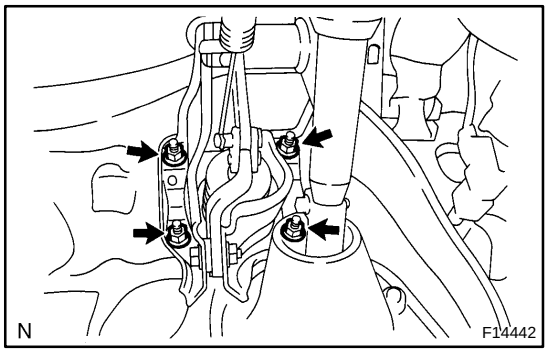

5. **REMOVE BRAKE BOOSTER**

(a) Remove the clevis from the push rod.
(b) Remove the 4 booster installation nuts.
(c) Remove the booster and gasket.
(d) Remove the 2 stopper rings, brake booster bracket and gasket from the brake booster.

BRAKE MASTER CYLINDER

COMPONENTS

BR1MO–01

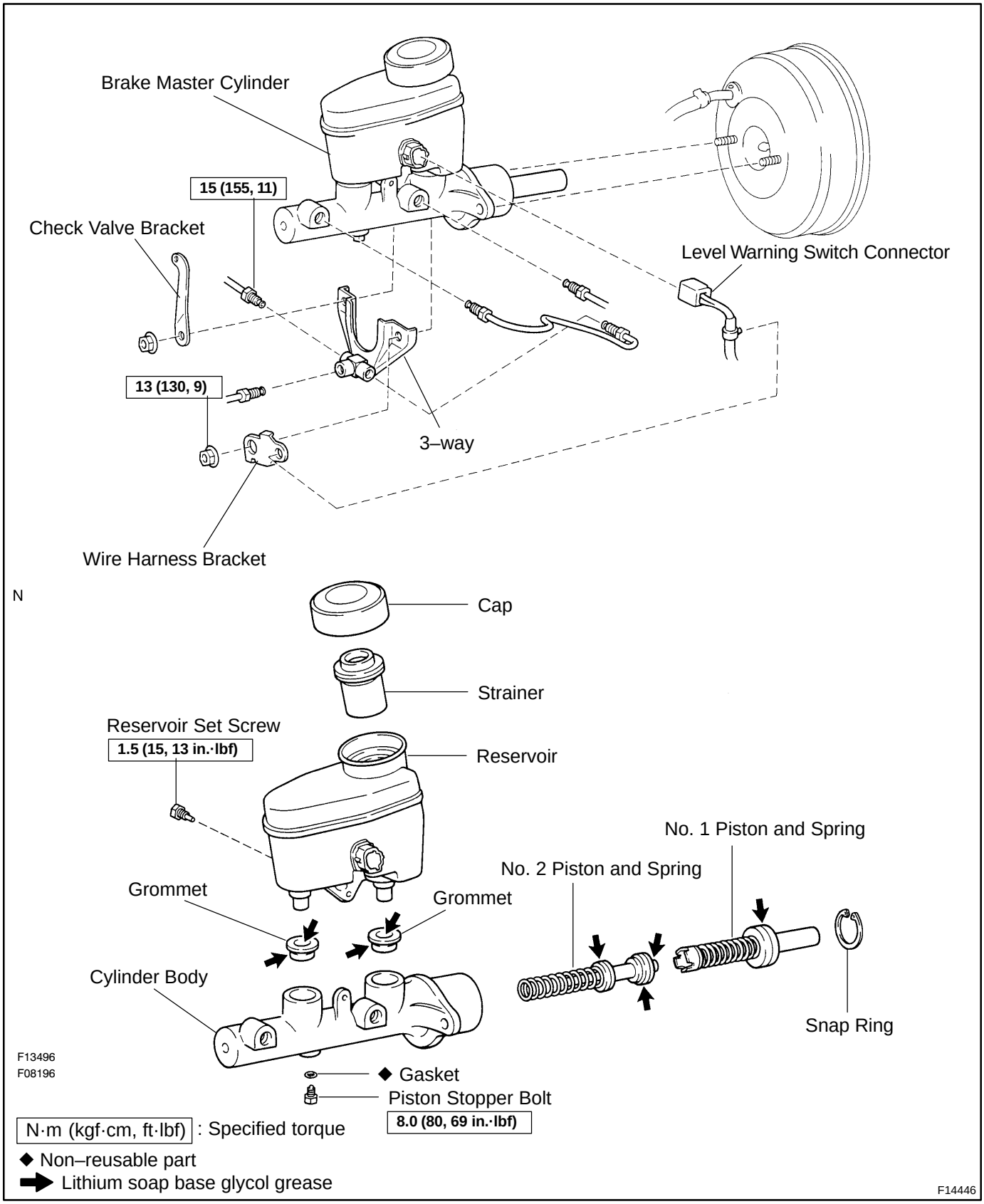

BR04M–03

DISASSEMBLY

1. REMOVE RESERVOIR

(a) Remove the set screw and pull out the reservoir.
Torque: 1.5 N·m (15 kgf·cm, 13 in.·lbf)

(b) Remove the cap and strainer from the reservoir.

2. REMOVE 2 GROMMETS

3. PLACE CYLINDER IN VISE

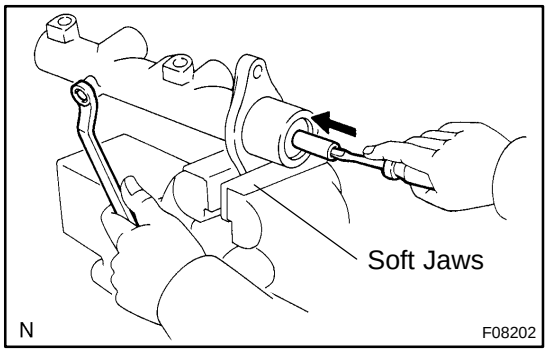

4. REMOVE PISTON STOPPER BOLT

Using a screwdriver, push the pistons in all the way and remove the piston stopper bolt and gasket.

HINT:

Tape the screwdriver tip before use.

Torque: 8.0 N·m (80 kgf·cm, 69 in.·lbf)

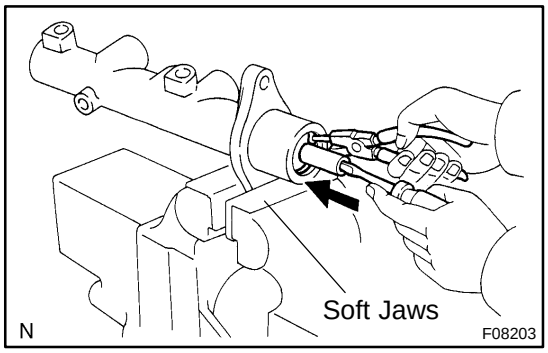

5. REMOVE 2 PISTONS AND SPRINGS

(a) Push in the piston with a screwdriver and remove the snap ring with snap ring pliers.

HINT:

Tape the screwdriver tip before use.

(b) Remove the No. 1 piston and spring by hand, pulling straight out, not at an angle.

NOTICE:

- **If pulled out and installed at an angle, there is a possibly that the cylinder bore could be damaged.**
- **At the time of disassembly, be careful not to damage the rubber lips on the pistons.**

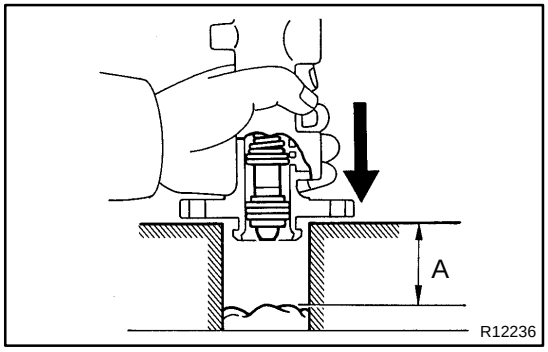

(c) Place a rag and 2 wooden blocks on the work table, and lightly tap the cylinder flange against the block edges until the No. 2 piston and spring drops out of the cylinder.

HINT:

Make sure the distance (A) from the rag to the top of the blocks is at least 100 mm (3.94 in.).

BR04N–01

INSPECTION

HINT:

Clean the disassembled parts with compressed air.

1. INSPECT CYLINDER BORE FOR RUST OR SCORING

2. INSPECT CYLINDER FOR WEAR OR DAMAGE

If necessary, clean or replace the cylinder.

BR04P–03

INSTALLATION

Installation is in the reverse order of removal (See page BR–10).

HINT:

- Before installation, adjust the length of the brake booster push rod (See page BR–10).
- After installation, fill the brake reservoir with brake fluid, bleed brake system (See page BR–4) and check for leaks.
- Check and adjust the brake pedal (See page BR–6).

BR04O–02

REASSEMBLY

Reassembly is in the reverse order of disassembly (See page BR–11).

NOTICE:

Apply lithium soap base glycol grease to the rubber parts indicated by the arrows (See page BR–9).

BR04L–02

REMOVAL

1. DISCONNECT LEVEL WARNING SWITCH CONNECTOR

2. DISCONNECT WIRE HARNESS FROM BRACKET

3. TAKE OUT FLUID WITH SYRINGE

NOTICE:

Do not let brake fluid remain on a painted surface. Wash it off immediately.

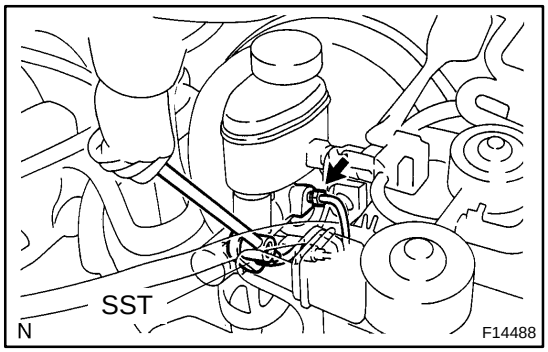

4. DISCONNECT BRAKE LINES

Using SST, disconnect the 3 brake lines and remove the brake line from the master cylinder and 3–way.

SST 09023–00100

Torque: 15 N·m (155 kgf·cm, 11 ft·lbf)

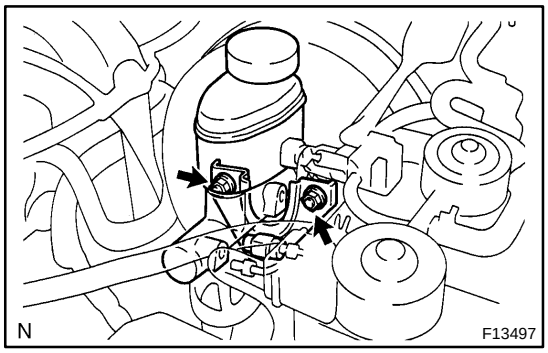

5. REMOVE MASTER CYLINDER

Remove the 2 nuts, wire harness bracket, 3–way, check valve bracket and master cylinder.

Torque: 13 N·m (130 kgf·cm, 9 ft·lbf)

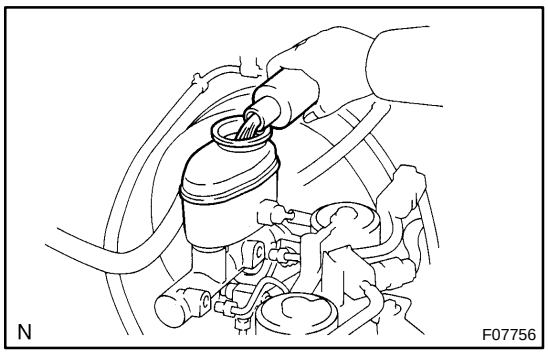

BRAKE FLUID

BR04H–03

BLEEDING

HINT:

If any work is done on the brake system or if air is suspected in the brake lines, bleed the air from the system.

NOTICE:

Do not let brake fluid remain on a painted surface. Wash it off immediately.

1. FILL BRAKE RESERVOIR WITH BRAKE FLUID

Check the fluid level in the reservoir after bleeding each wheel. Add fluid, if necessary.

Fluid: SAE J1703 or FMVSS No. 116 DOT3

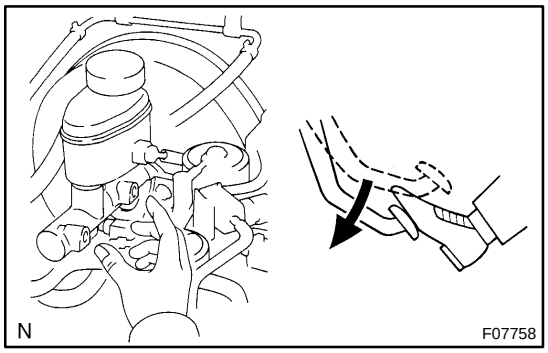

2. BLEED MASTER CYLINDER

HINT:

If the master cylinder was disassembled or if the reservoir becomes empty, bleed the air from the master cylinder.

(a) Disconnect the brake lines from the master cylinder.
SST 09023–00100

(b) Slowly depress the brake pedal and hold it.

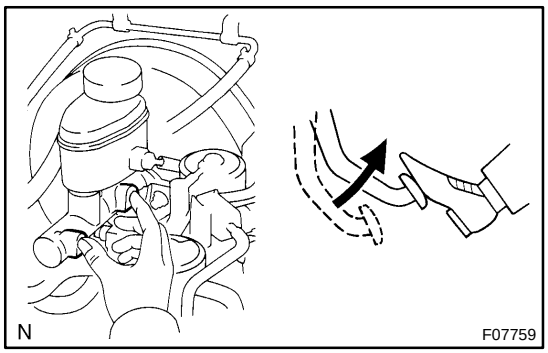

(c) Block off the outlet plug with your finger, and release the brake pedal.

(d) Repeat (b) and (c) 3 or 4 times.

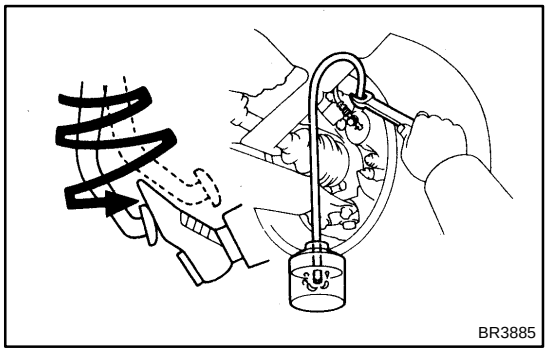

3. BLEED BRAKE LINE

(a) Connect the vinyl tube to the caliper or wheel cylinder bleeder plug.

HINT:

Begin air bleeding from the wheel cylinder with the longest hydraulic.

(b) Depress the brake pedal several times, then loosen the bleeder plug with the pedal held down.

(c) At the point when fluid stops coming out, tighten the bleeder plug, then release the brake pedal.

(d) Repeat (b) and (c) until all the air in the fluid has been bled out.

Torque: (Bleeder plug) 11 N·m (110 kgf·cm, 8 ft·lbf)

(e) Repeat the procedure on the previous page to bleed the air out of brake line for each wheel.

4. CHECK FLUID LEVEL IN RESERVOIR

Check the fluid level and add fluid if necessary.

Fluid: SAE J1703 or FMVSS No. 116 DOT3

BR108–02

COMPONENTS

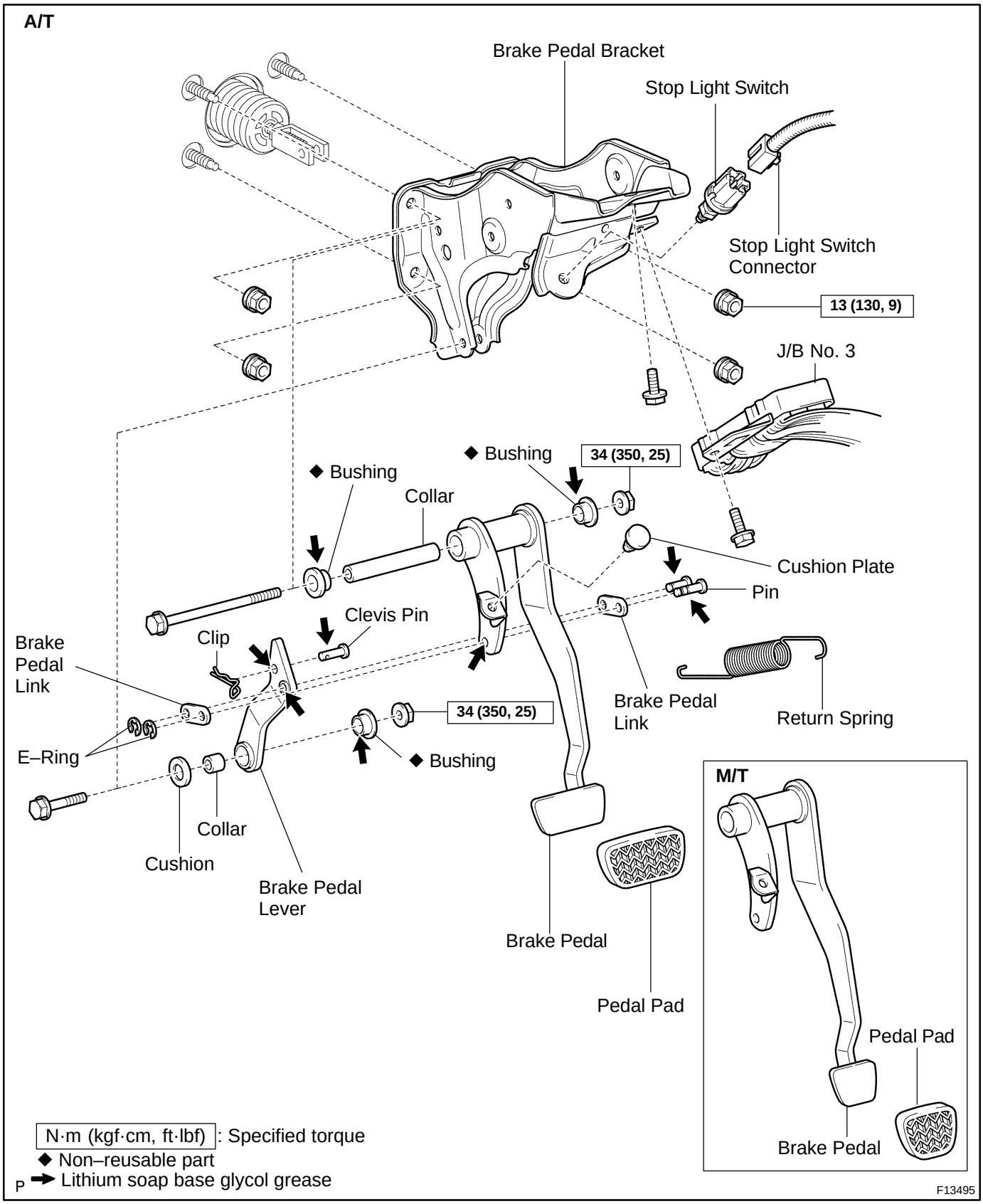

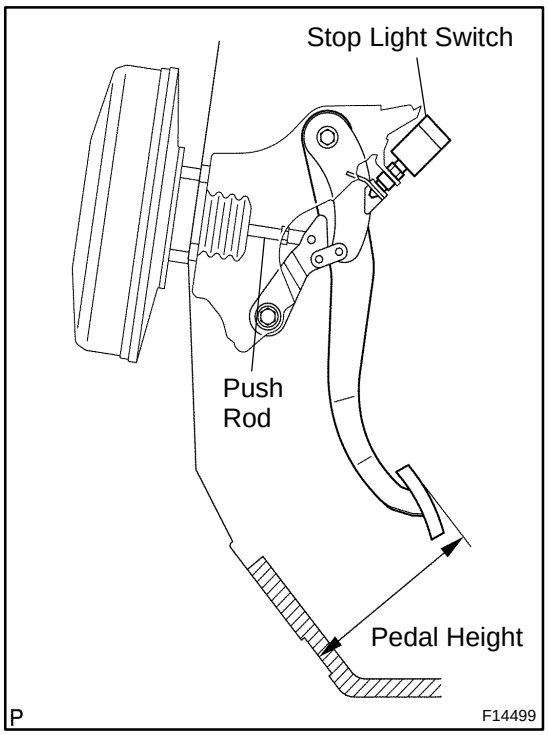

BRAKE PEDAL

BR0YL–02

ON–VEHICLE INSPECTION

1. CHECK PEDAL HEIGHT

Pedal height from dash panel:
154 – 168 mm (6.06 – 6.61 in.)

NOTICE:

Do not adjust the pedal height. Doing so by changing the push rod length of the brake booster will structurally change the pedal ration.

If the pedal height is incorrect, check that there is no damage in brake pedal, brake pedal lever, brake pedal bracket and dash panel.

- Even if there is damage, there is no problem if the reserve distance is within the standard value.
- If necessary, replace the brake pedal, brake pedal lever, brake pedal bracket or brake pedal assembly.

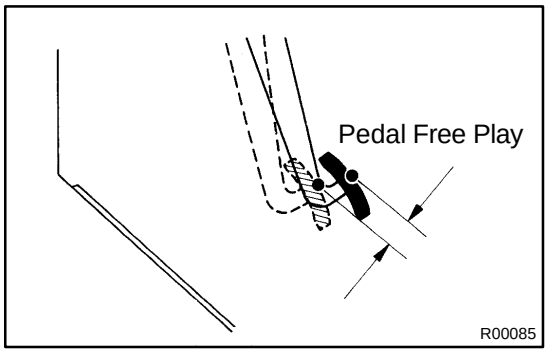

2. CHECK PEDAL FREE PLAY

(a) Stop the engine and depress the brake pedal several times until there is no more vacuum left in the booster.

(b) Push in the pedal by hand until the second point of resistance begins to be felt, then measure the distance as shown in the illustration.

Pedal free play: 1 – 6 mm (0.04 – 0.24 in.)

If incorrect , check the stop light switch clearance. If the clearance is OK, then troubleshoot the brake system.

Stop light switch clearance:
1.0 – 2.4 mm (0.039 – 0.094 in.)

HINT:

The free play to the first point of resistance is due to the play between the clevis and pin. It is 1 – 3 mm (0.04 – 0.12 in.) at the pedal.

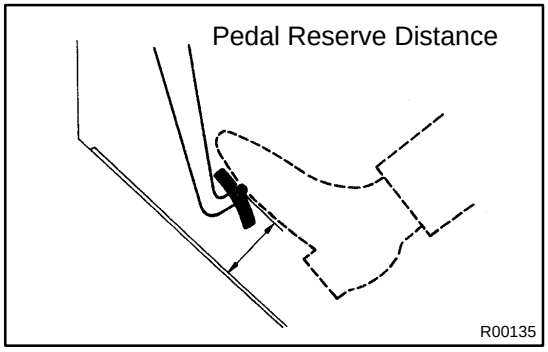

3. CHECK PEDAL RESERVE DISTANCE

Release the parking brake.

Stop the engine and depress the brake pedal several times until there is no more vacuum left in the booster, measure the pedal reserve distance, as shown.

Pedal reserve distance from asphalt sheet at 490 N (50 kgf, 110.2 lbf): More than 105 mm (4.13 in.)

If the reserve distance is incorrect, troubleshoot the brake system.

BRAKE SYSTEM

BR04F–01

PRECAUTION

- **Care must be taken to replace each part properly as it could affect the performance of the brake system and result in a driving hazard. Replace the parts with parts of the same part number or equivalent.**
- **It is very important to keep parts and the area clean when repairing the brake system.**
- **If the vehicle is equipped with a mobile communication system, refer to the precaution in the IN section.**

FRONT BRAKE CALIPER (2WD)

BR04Y–02

COMPONENTS

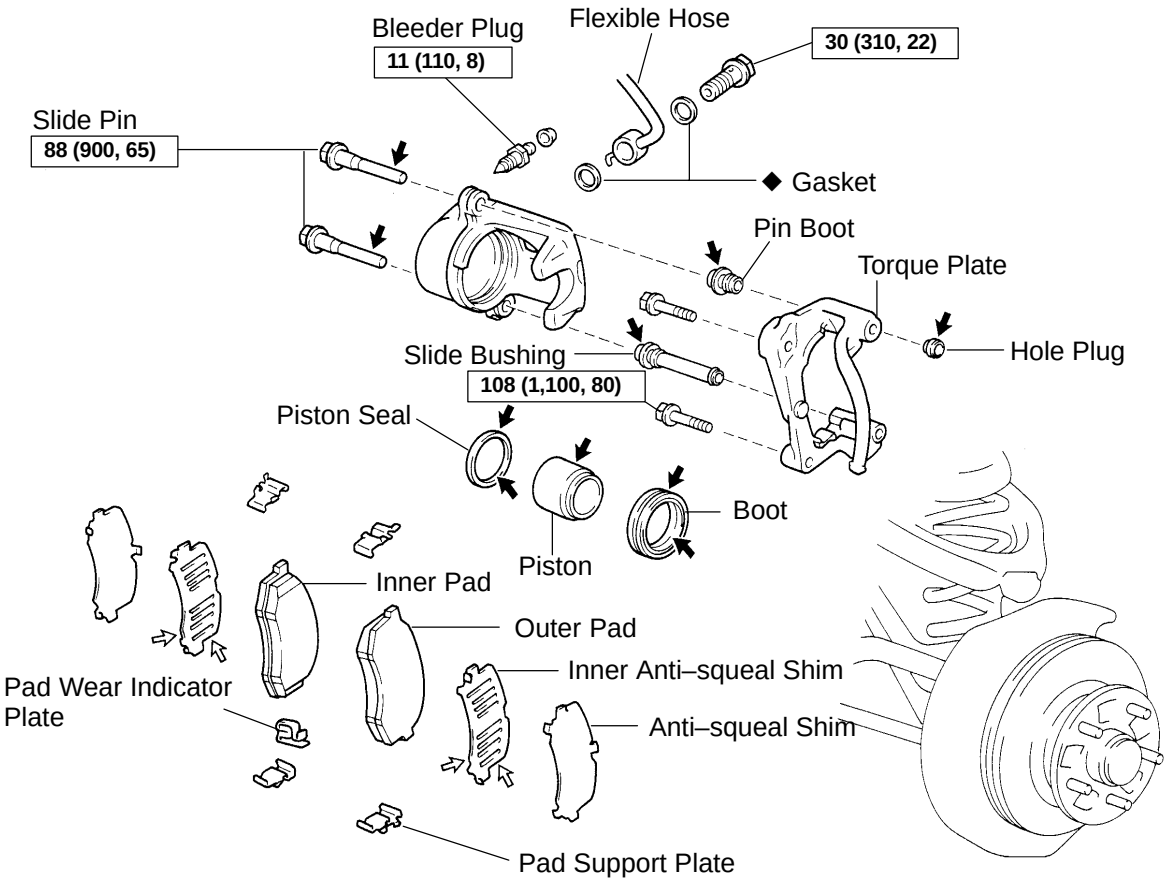

N·m (kgf·cm, ft·lbf) : Specified torque
◆ Non–reusable part
⇨ Disc brake grease
➡ Lithium soap base glycol grease

F00807

BR050–03

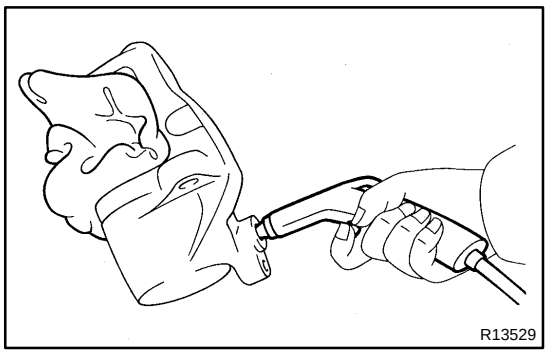

DISASSEMBLY

1. REMOVE PISTON AND CYLINDER BOOT

(a) Put a piece of cloth or an equivalent between the piston and caliper.

(b) Use compressed air to remove the piston and cylinder boot from the caliper.

CAUTION:

Do not place your fingers in front of the piston when using compressed air.

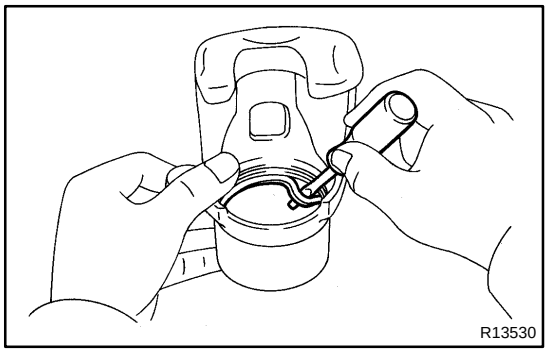

2. REMOVE PISTON SEAL FROM BRAKE CALIPER

Using a screwdriver, remove the piston seal.

3. REMOVE SLIDING BUSHING AND BOOT

Remove the sliding bushing and pin boot from the torque plate.

HINT:

At the time of installation, ensure that the sliding bushing and boot are secured firmly to the caliper grooves.

BR051–03

INSPECTION

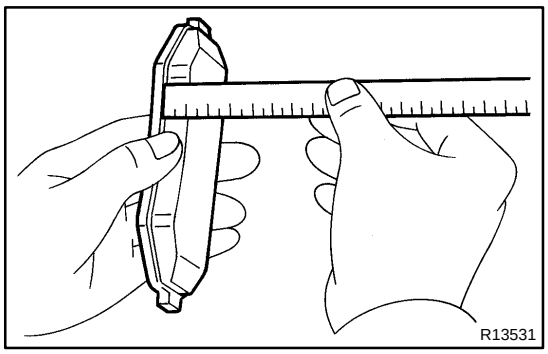

1. MEASURE PAD LINING THICKNESS

Using a ruler, measure the pad lining thickness.

Standard thickness: 12.0 mm (0.472 in.)

Minimum thickness: 1.0 mm (0.039 in.)

Replace the pad if the thickness is less than the minimum or if it shows signs of uneven wear.

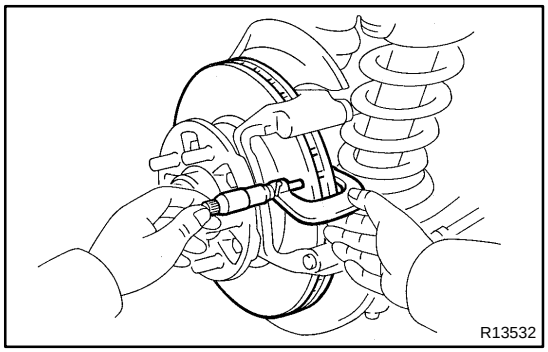

2. MEASURE DISC THICKNESS

Using a micrometer, measure the disc thickness.

Standard thickness: 22.0 mm (0.866 in.)

Minimum thickness: 20.0 mm (0.787 in.)

If the disc is scored or worn, or if its thickness is less than the minimum, repair or replace the disc.

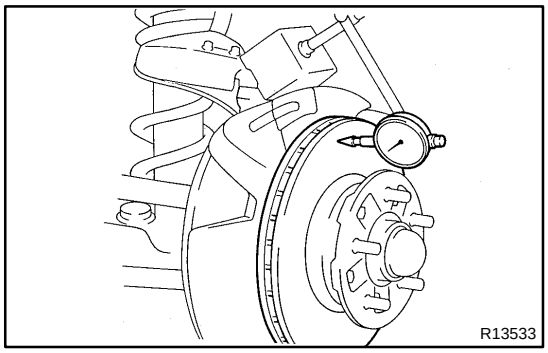

3. MEASURE DISC RUNOUT

Using a dial indicator, measure the disc runout at a position 10 mm (0.39 in.) from the outside edge.

Maximum disc runout: 0.07 mm (0.0028 in.)

If the runout is greater than the maximum, replace the disc or grind it on a ”On–Car” brake lathe.

HINT:

Before measuring the runout, confirm that the front hub bearing play is within the specification.

4. IF NECESSARY, REPLACE DISC

(a) Remove the torque plate from the knuckle.

(b) Remove the axle hub (See page SA–15).

(c) Remove the disc from the axle hub.

(d) Install a new disc and torque the bolts.

Torque: 64 N·m (650 kgf·cm, 47 ft·lbf)

(e) Install the axle hub and adjust the front bearing preload (See page SA–19).

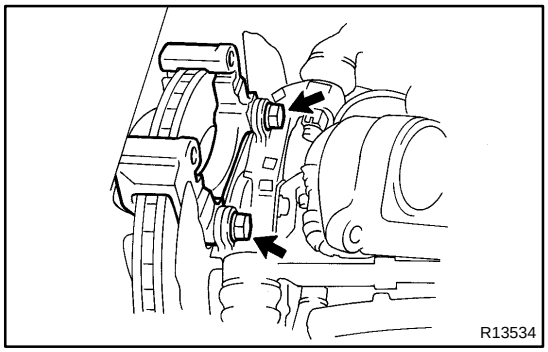

(f) Install the torque plate onto the knuckle.

Torque: 108 N·m (1,100 kgf·cm, 80 ft·lbf)

BR053–02

INSTALLATION

Installation is in the reverse order of removal (See page BR–29).

HINT:

After installation, fill the brake reservoir with brake fluid, bleed brake system (See page BR–4) and check for leaks.

BR052–01

REASSEMBLY

Reassembly is in the reverse order of disassembly (See page BR–26).

NOTICE:

Apply lithium soap base glycol grease to the parts indicated by the arrows (See page BR–24).

BR04Z–02

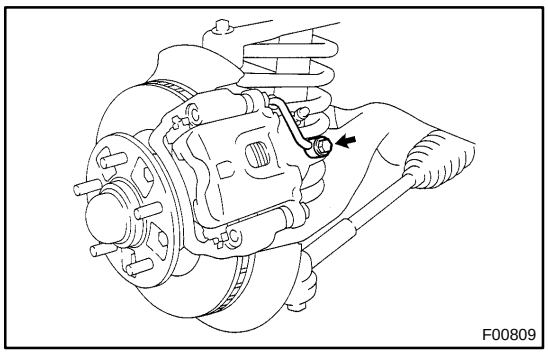
F00809

REMOVAL

1. DISCONNECT FLEXIBLE HOSE

(a) Remove the union bolt and disconnect the flexible hose.

Torque: 30 N·m (310 kgf·cm, 22 ft·lbf)

NOTICE:

At the time of installation, for correct brake hose routing, ensure that the hose hangs down before installing hose to caliper.

(b) Use a container to catch the brake fluid.

2. REMOVE CALIPER FROM TORQUE PLATE

Remove the 2 slide pins and caliper.

Torque: 88 N·m (900 kgf·cm, 65 ft·lbf)

3. REMOVE 2 BRAKE PADS WITH 4 ANTI–SQUEAL SHIMS AND PAD WEAR INDICATOR

4. REMOVE 4 PAD SUPPORT PLATES

FRONT BRAKE CALIPER (4WD and PRE RUNNER)

BR054–05

COMPONENTS

HINT:

Pre runner is the described below.

RZN191L–TRPDKAB, RZN196L–CRPDKAB, RZN196L–PRPDKAB, VZN195L–CRPDKAB, VZN195L–PRPDKAB

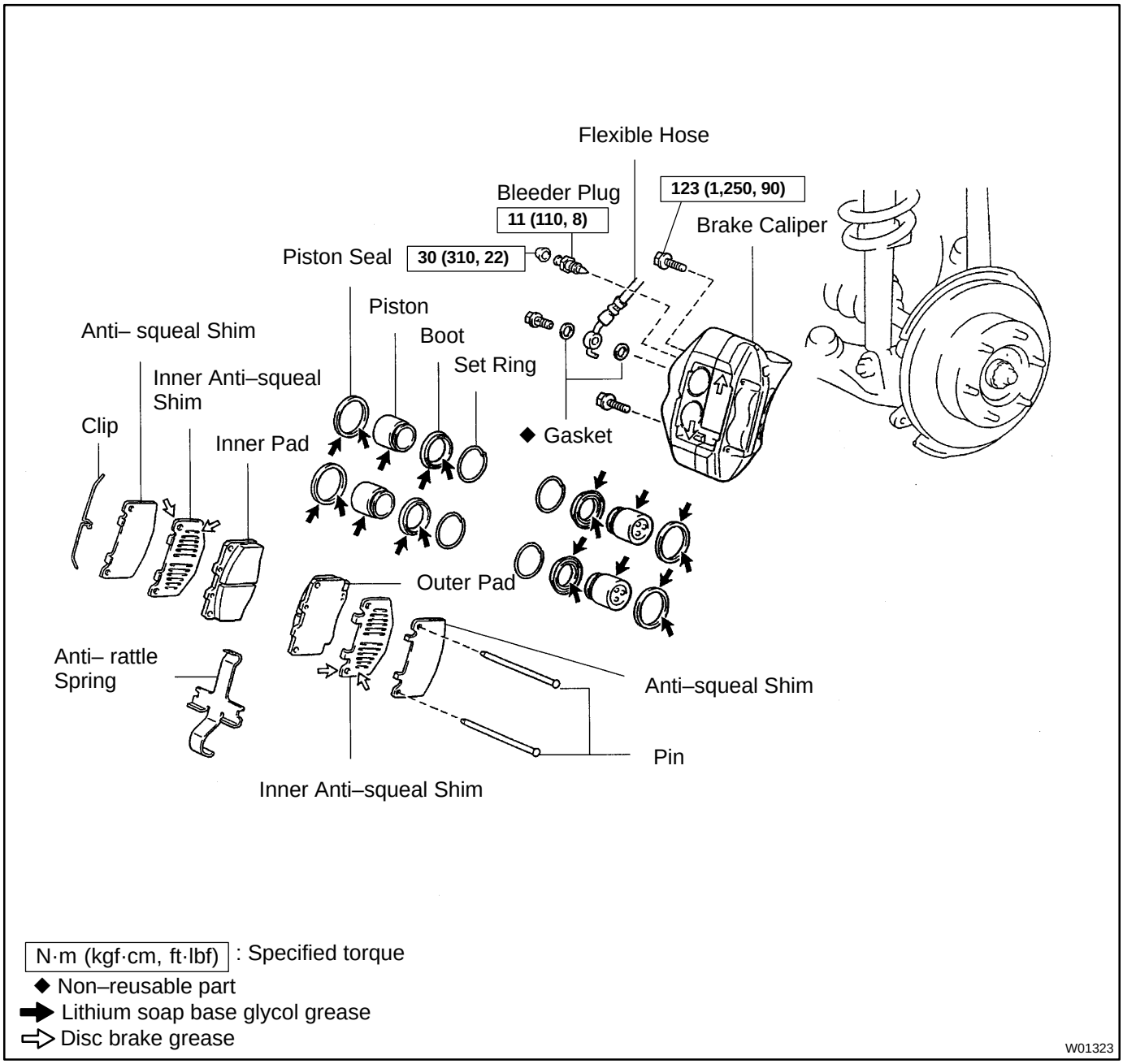

BR056–02

DISASSEMBLY

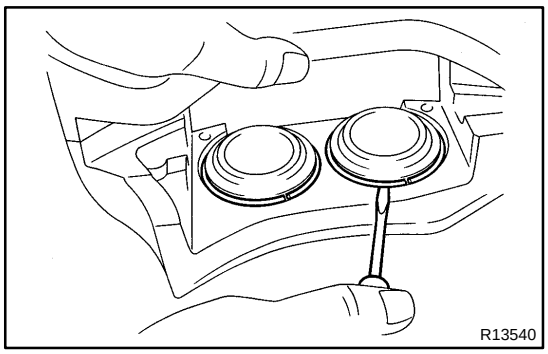

1. REMOVE CYLINDER BOOT SET RINGS AND BOOTS

Using a screwdriver, remove the 4 cylinder boot set rings and boots.

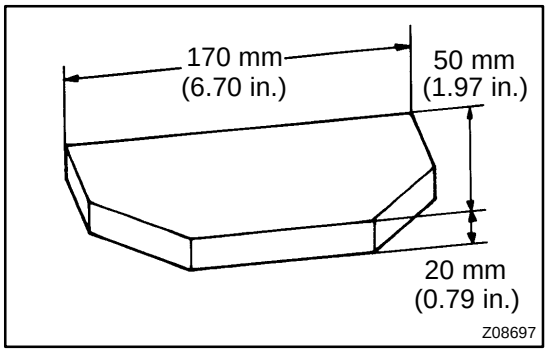

2. REMOVE PISTONS FROM CYLINDER

(a) Prepare the wooden plate to hold the pistons.

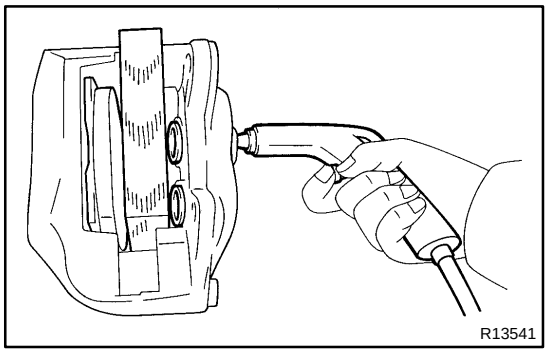

(b) Place the plate between the pistons and insert a pad at one side.

(c) Use compressed air to remove the pistons alternately from the cylinder.

CAUTION:

Do not place your fingers in front of the pistons when using compressed air.

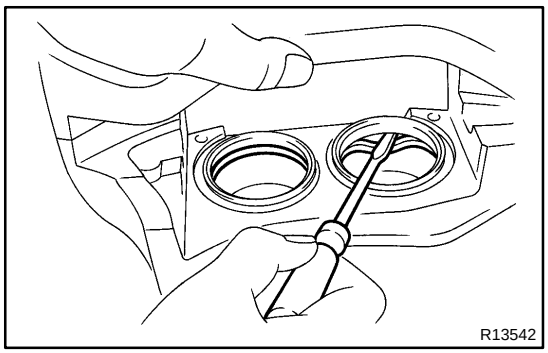

3. REMOVE PISTON SEALS

Using a screwdriver, remove the 4 seals from the cylinder.

BR057–02

INSPECTION

1. MEASURE PAD LINING THICKNESS (See step 1. on page BR–27)
Standard thickness: 11.5 mm (0.453 in.)
Minimum thickness: 1.0 mm (0.039 in.)

2. MEASURE DISC THICKNESS (See step 2. on page BR–27)
Standard thickness: 22.0 mm (0.866 in.)
Minimum thickness: 20.0 mm (0.787 in.)

3. MEASURE DISC RUNOUT

(a) Tighten the disc with the 3 hub nuts.

(b) Using a dial indicator, measure the disc runout at a position 10 mm (0.39 in.) from the outside edge.
Maximum disc runout: 0.07 mm (0.0028 in.)

If the runout is greater than the maximum, replace the disc or grind it on a ”On–Car” brake lathe.

HINT:

Before measuring the runout, confirm that the front bearing play is within the specification.

4. IF NECESSARY, ADJUST DISC RUNOUT

(a) Remove the hub nuts and disc. Reinstall the disc rotating 1/6 of a turn from its original position on the hub. Install and torque the hub nuts. Remeasure the disc runout. Make a note of the runout and the disc’s position on the hub.

(b) Repeat (a) until the disc has been installed on the 4 remaining hub position.

If the minimum runout recorded in (a) and (b) is less than the maximum disc runout, install the disc in that position.

If the minimum runout recorded in (a) and (b) is greater than the maximum disc runout, replace the disc and repeat step 3.

BR059–02

INSTALLATION

Installation is in the reverse order of removal (See page BR–31).

HINT:

After installation, fill the brake reservoir with brake fluid, bleed brake system (See page BR–4) and check for leaks.

BR058–03

REASSEMBLY

Reassembly is in the reverse order of disassembly (See page BR–32).

NOTICE:

Apply lithium soap base glycol grease to the parts indicated by the arrows (See page BR–30).

BR055–02

REMOVAL

1. REMOVE FRONT WHEEL

Torque: 103 N·m (1,050 kgf·cm, 76 ft·lbf)

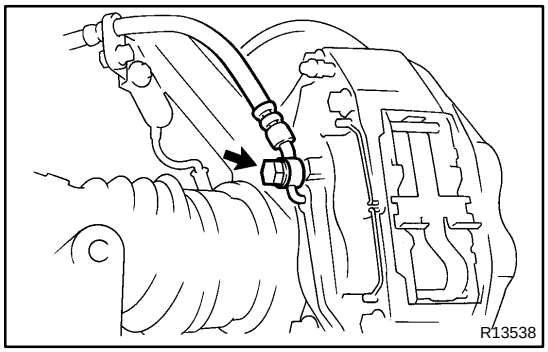

2. DISCONNECT FLEXIBLE HOSE

Remove the union bolt and 2 gaskets from the caliper, then disconnect the flexible hose from the caliper.

Torque: 30 N·m (310 kgf·cm, 22 ft·lbf)

HINT:

At the time of installation, install the flexible hose lock securely in the lock hole in the caliper.

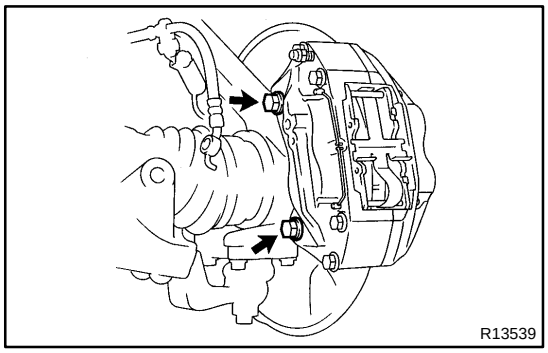

3. REMOVE CALIPER

Remove the 2 mounting bolts and caliper.

Torque: 123 N·m (1,250 kgf·cm, 90 ft·lbf)

4. REMOVE CLIP, 2 PINS AND ANTI–RATTLE SPRING

5. REMOVE 2 PADS WITH 4 ANTI–SQUEAL SHIMS

FRONT BRAKE PAD (2WD)

BR04U–03

COMPONENTS

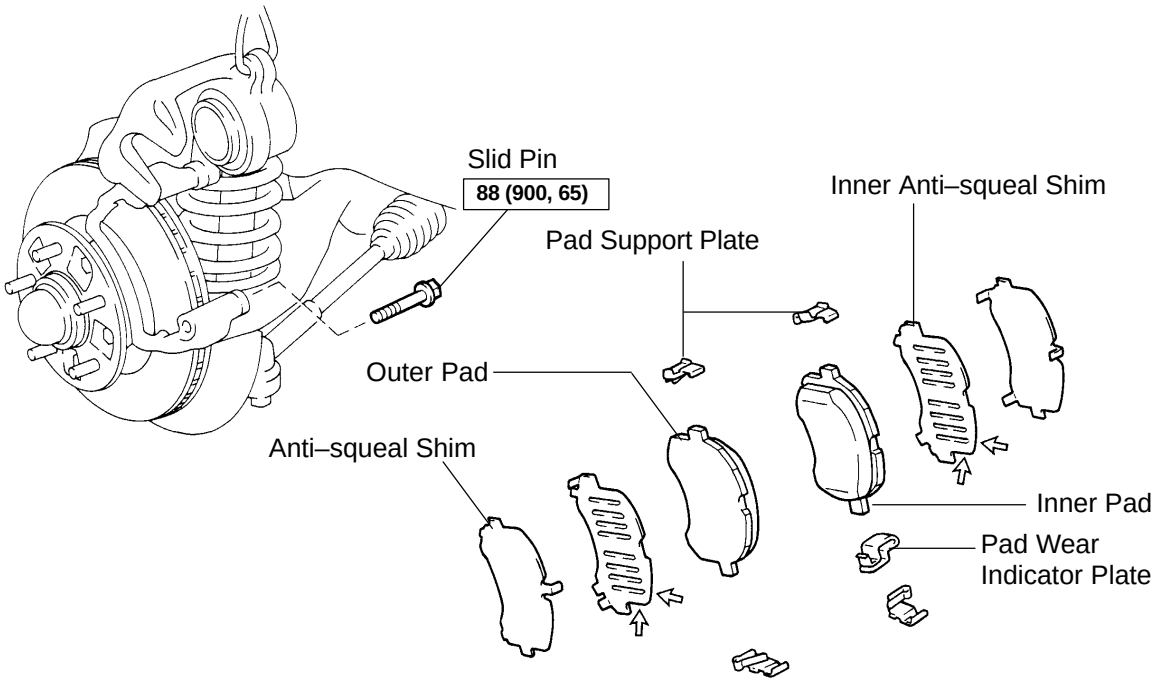

N·m (kgf·cm, ft·lbf) : Specified torque

⇨ Disc brake grease

F00806

BR04V–03

REPLACEMENT

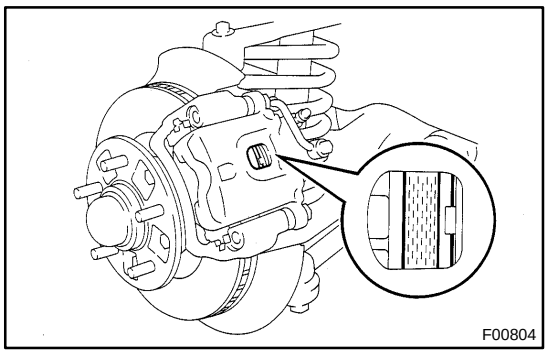

1. REMOVE FRONT WHEEL

2. INSPECT PAD LINING THICKNESS

Check the pad thickness through the caliper inspection hole and replace pads if not within specification.

Minimum thickness: 1.0 mm (0.039 in.)

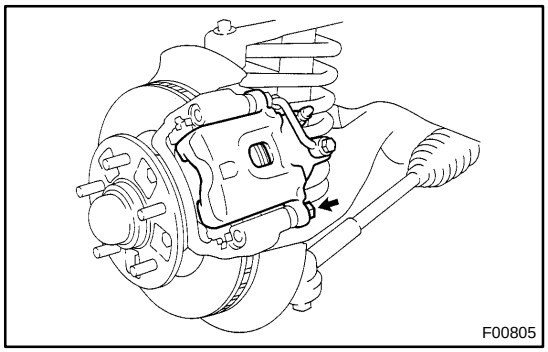

3. LIFT UP CALIPER

(a) Remove the bottom side slide pin.

(b) Lift up the caliper and suspend it securely.

HINT:

Do not disconnect the flexible hose from the caliper.

4. REMOVE 2 BRAKE PADS WITH 4 ANTI–SQUEAL SHIMS

5. REMOVE PAD WEAR INDICATOR PLATE

6. REMOVE 4 PAD SUPPORT PLATES

NOTICE:

The pad support plates can be used again provided that they have sufficient rebound, no deformation, cracks or wear, and have had all rust, dirt and foreign particles cleaned off.

7. CHECK DISC THICKNESS AND RUNOUT (See page BR–27)

8. INSTALL 4 PAD SUPPORT PLATES

9. INSTALL NEW PADS

NOTICE:

When replacing worn pads, the anti–squeal shims and wear indicator plates must be replaced together with the pads.

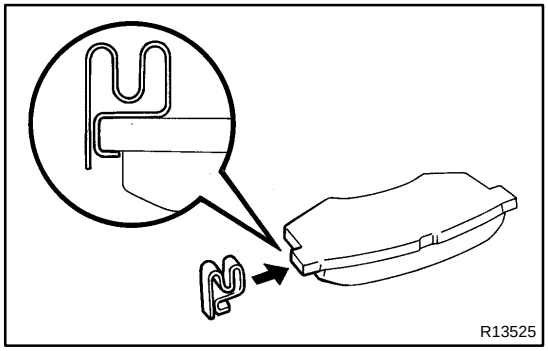

(a) Install a pad wear indicator plate to the inner pad.

(b) Install the 2 anti–squeal shims to each pad.

HINT:

Apply disc brake grease to both sides of inner anti–squeal shims (See page BR–19).

(c) Install the inner pad so that the wear indicator plate is facing downward, then install the outer pad.

NOTICE:

Do not allow oil or grease to get on the rubbing face.

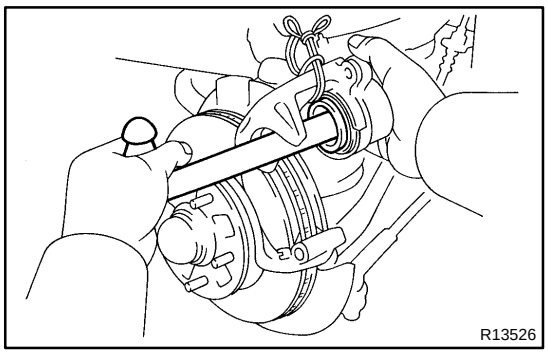

10. INSTALL CALIPER

(a) Draw out a small amount of brake fluid from the reservoir.

(b) Press in piston with a hammer handle or equivalent.

HINT:

If the piston is difficult to push in, loosen the bleeder plug and push in the piston while letting some brake fluid escape.

(c) Insert the brake caliper carefully so the boot is not wedged.

(d) Install and torque the slide pin.
Torque: 88 N·m (900 kgf·cm, 65 ft·lbf)

11. INSTALL FRONT WHEEL
Torque: 103 N·m (1,050 kgf·cm, 76 ft·lbf)

12. DEPRESS BRAKE PEDAL SEVERAL TIMES

13. CHECK THAT FLUID LEVEL IS AT MAX LINE

FRONT BRAKE PAD (4WD and PRE RUNNER)

BR04W–05

COMPONENTS

HINT:

Pre runner is the described below.

RZN191L–TRPDKAB, RZN196L–CRPDKAB, RZN196L–PRPDKAB, VZN195L–CRPDKAB, VZN195L–PRPDKAB

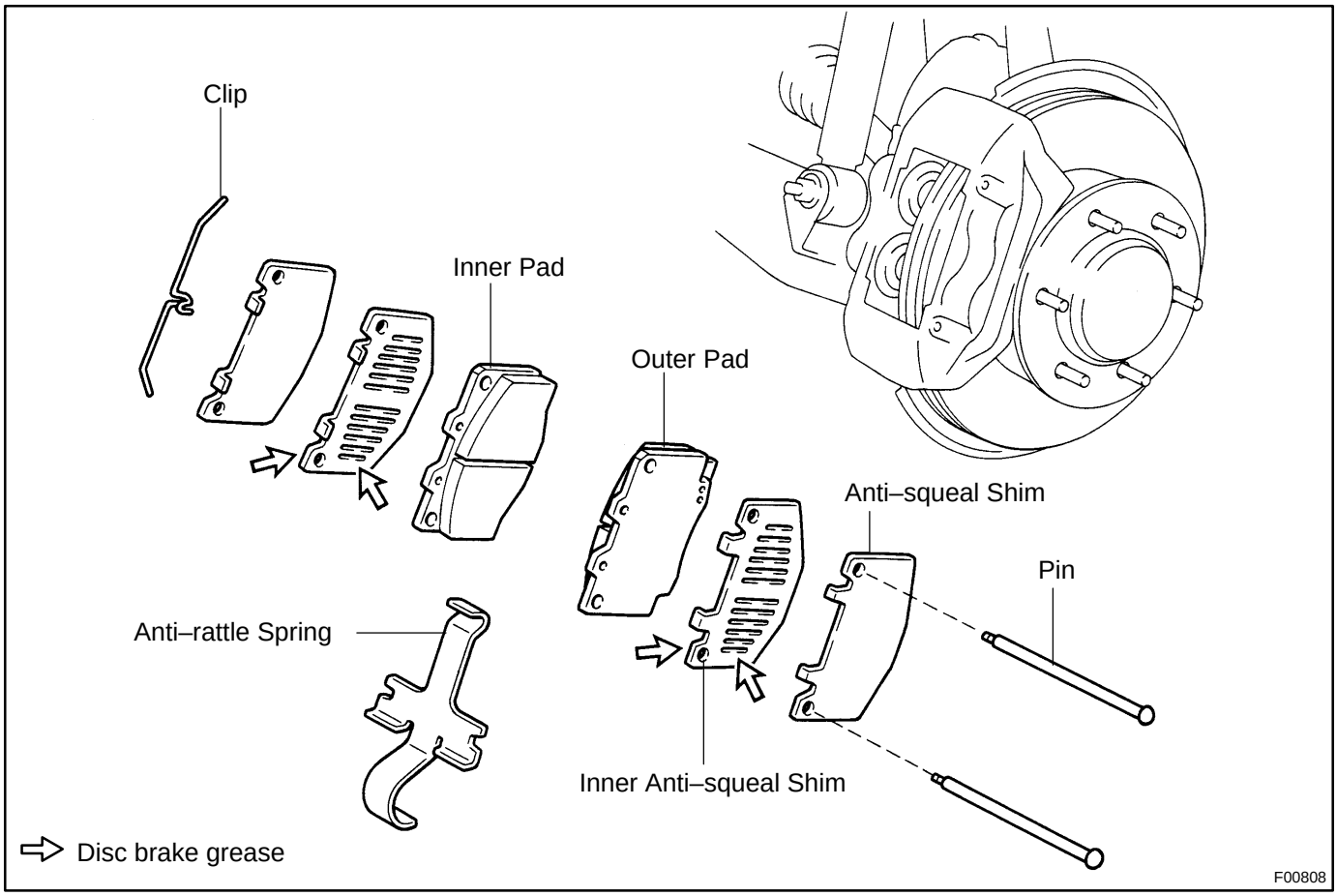

BR04X–04

REPLACEMENT

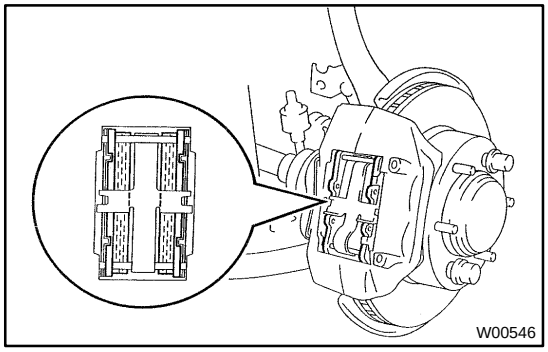

1. REMOVE FRONT WHEEL

2. INSPECT PAD LINING THICKNESS

Check the pad thickness and replace pads if not within specification.

Minimum thickness: 1.0 mm (0.039 in.)

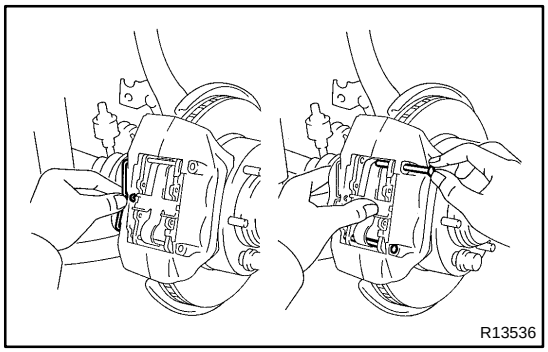

3. REMOVE CLIP, 2 PINS AND ANTI–RATTLE SPRING

4. REMOVE 2 PADS AND 4 ANTI–SQUEAL SHIMS

NOTICE:

The anti–rattle spring and clip can be used again provided that they have sufficient rebound, no deformation, cracks or wear, and have had all rust, dirt and foreign particles cleaned off.

5. CHECK DISC THICKNESS AND RUNOUT (See page BR–33)

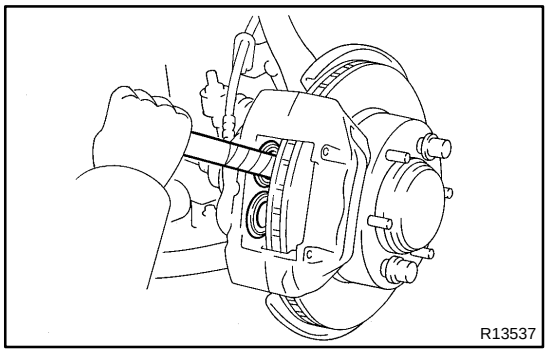

6. INSTALL NEW PADS

NOTICE:

When replacing worn pads, the anti–squeal shims must be replaced together with the pads.

(a) Draw out a small amount of brake fluid from the reservoir.

(b) Press in the pistons with a monkey wrench handle or equivalent.

HINT:

- Tape the monkey wrench handle before use.
- Always change the pad on one wheel at a time as there is a possibility of the opposite piston flying out.
- If the piston is difficult to push in, loosen the bleeder plug and push in the piston while letting some brake fluid escape.

(c) Install the anti–squeal shims to new pads.

HINT:

Apply disc brake grease to both sides of inner anti–squeal shims (See page BR–30).

(d) Install the 2 pads.

NOTICE:

Do not allow oil or grease to get on the rubbing face.

7. INSTALL ANTI–RATTLE SPRING AND 2 PINS

8. INSTALL CLIP

9. INSTALL FRONT WHEEL

Torque: 103 N·m (1,050 kgf·cm, 76 ft·lbf)

10. DEPRESS BRAKE PEDAL SEVERAL TIMES

11. CHECK THAT FLUID LEVEL IS AT MAX LINE

FRONT SPEED SENSOR

BR05U–04

COMPONENTS

HINT:

Pre runner is the described below.

RZN191L–TRPDKAB, RZN196L–CRPDKAB, RZN196L–PRPDKAB, VZN195L–CRPDKAB, VZN195L–PRPDKAB

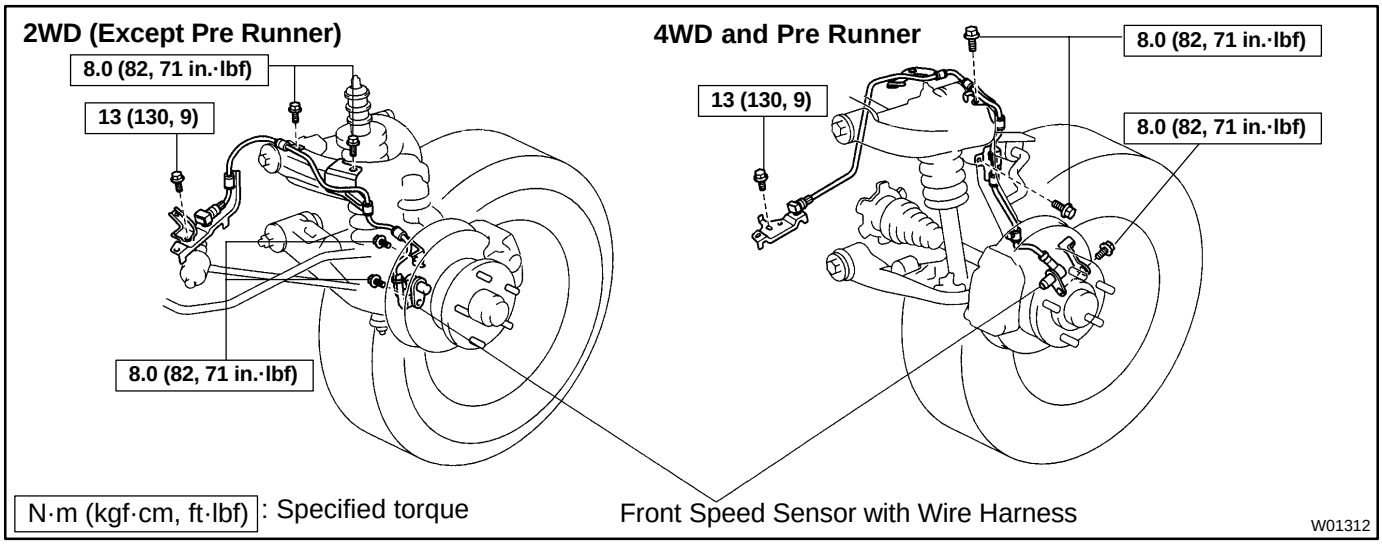

BR05W–02

INSTALLATION

Installation is in the reverse order of removal (See page BR–59).

NOTICE:

After installation, check the speed sensor signal (See page DI–534).

BR05V–03

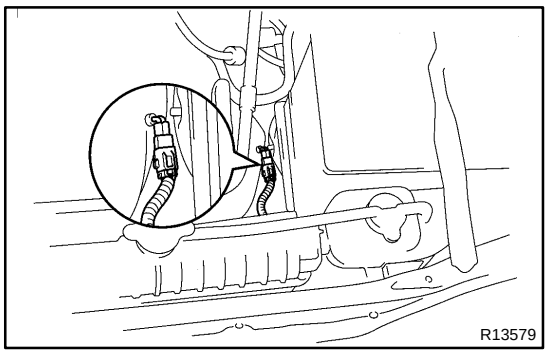

REMOVAL

REMOVE SPEED SENSOR

(a) Disconnect the speed sensor connector.

(b) Remove the 2 (4WD and pre runner) or 4 (2WD (except pre runner)) clamp bolts holding the sensor harness from the steering knuckle, upper arm and side rail.

Torque:
Upper arm, steering knuckle:
8.0 N·m (82 kgf·cm, 71 in.·lbf)
Side rail: 13 N·m (130 kgf·cm, 9 ft·lbf)

4WD and Pre Runner 2WD
(Except Pre Runner)

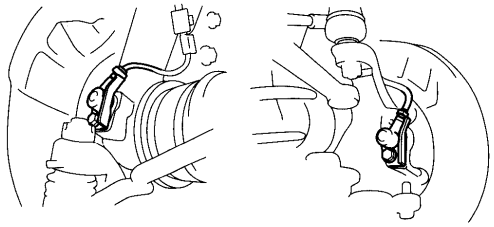

(c) Remove the speed sensor installation bolt from the steering knuckle.

Torque: 8.0 N·m (82 kgf·cm, 71 in.·lbf)

NOTICE:

At the time of installation, please refer to the following items.

- **There are no foreign objects on the sensor or the part of the knuckle to which the sensor is to be installed.**
- **The sensor is installed flat against the knuckle when you tighten the bolt.**
- **When installing the resin clips, use new ones.**

BR05J–05

COMPONENTS

4WD and Pre Runner

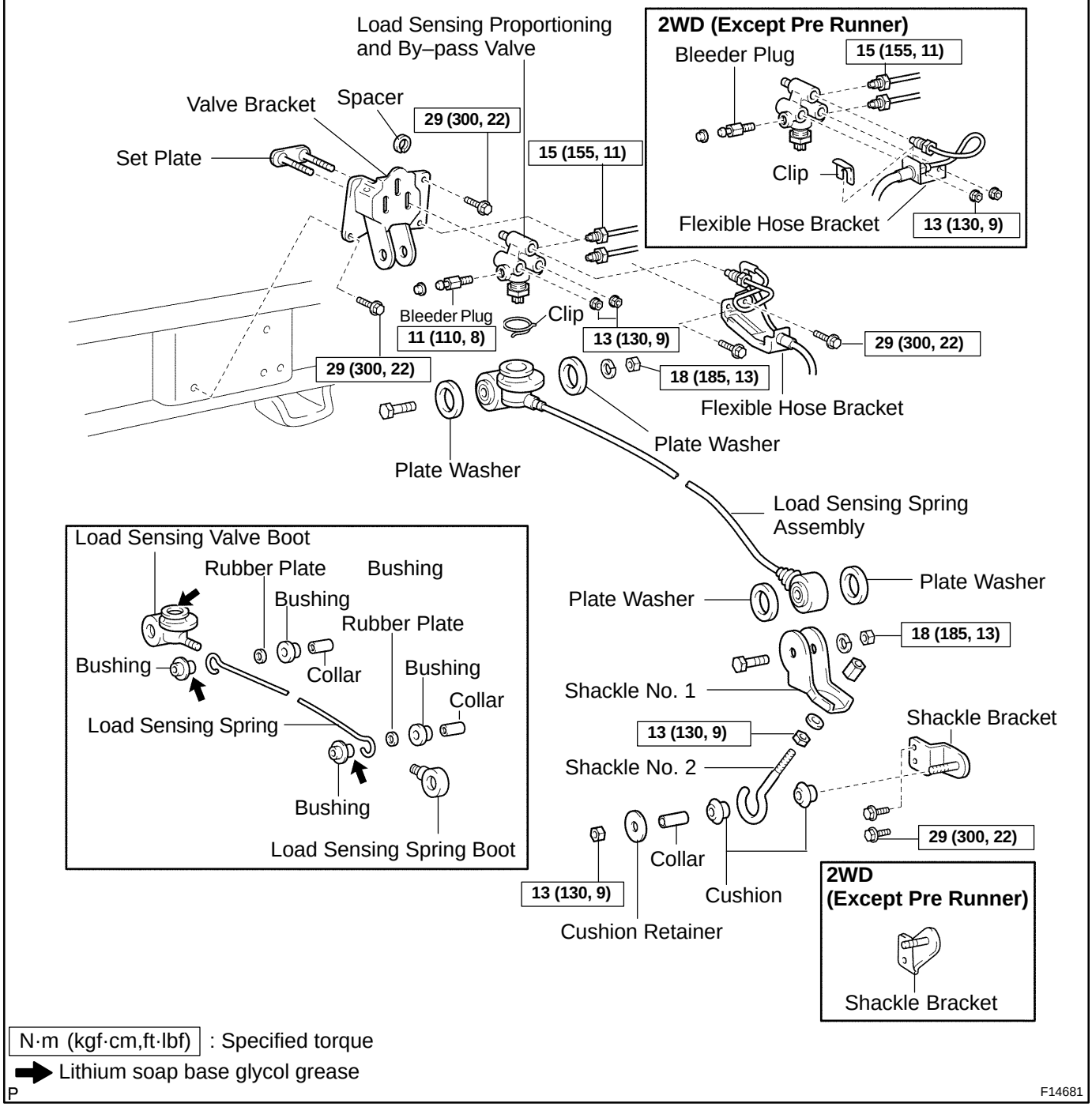

BR05L–04

DISASSEMBLY

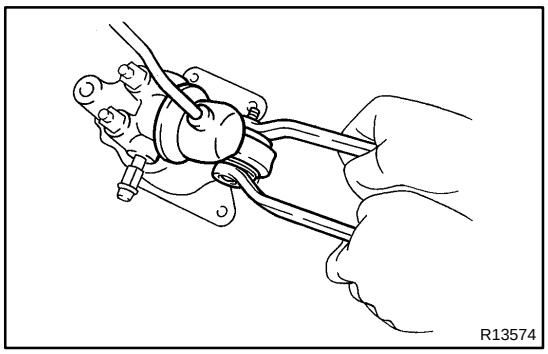

1. REMOVE VALVE BRACKET

(a) Remove the nut, bolt and 2 plate washers.

(b) 2WD (except pre runner):
Remove the 2 nuts and flexible hose bracket, and remove the valve bracket and set plate from the valve body.

(c) 4WD and Pre runner:
Remove the 2 nuts, and remove the valve bracket and set plate from the valve body.

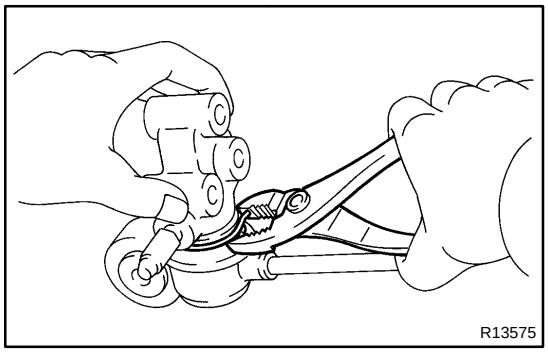

2. DISCONNECT SPRING FROM VALVE

Using pliers, remove the clip, and remove the spring from the valve.

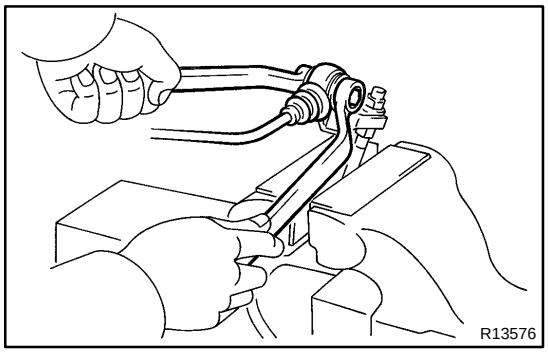

3. REMOVE SHACKLES NO.1 AND NO.2

(a) Remove the nut and bolt, and remove the load sensing spring and 2 plate washers.

(b) Loosen the 2 nuts and washer, and remove the shackle No. 1 from the shackle No. 2.

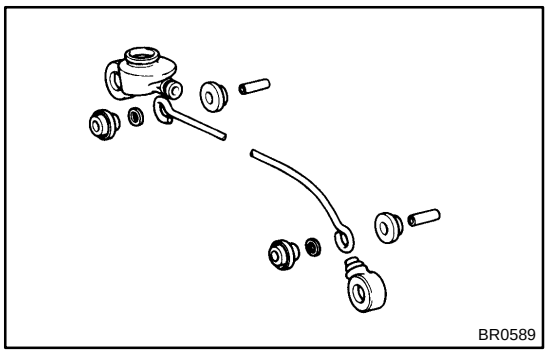

4. DISASSEMBLE LOAD SENSING SPRING

(a) Remove the 4 bushings, 2 collars and 2 rubber plates.

(b) Remove the load sensing valve boot and load sensing spring boot.

BR05M–03

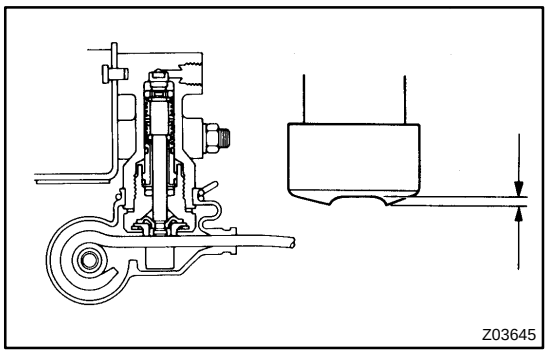

INSPECTION

INSPECT VALVE PISTON PIN AND LOAD SENSING CONTACT SURFACE FOR WEAR

Wear limit: 0.7 mm (0.028 in.)

BR05O–04

INSTALLATION

1. INSTALL LSP & BV ASSEMBLY TO FRAME

(a) 2WD (except pre runner):
Install the 3 valve bracket mounting bolts and spacer with the LSP & BV assembly.

(b) 4WD and pre runner:
Install the 3 valve bracket mounting bolts, spacer and flexible hose bracket mounting bolt with the LSP & BV assembly and flexible hose bracket.
Torque: 29 N·m (300 kgf·cm, 22 ft·lbf)

2. CONNECT BRAKE LINE

Using SST, connect the brake lines.
Torque: 15 N·m (155 kgf·cm, 11 ft·lbf)
SST 09023–00100

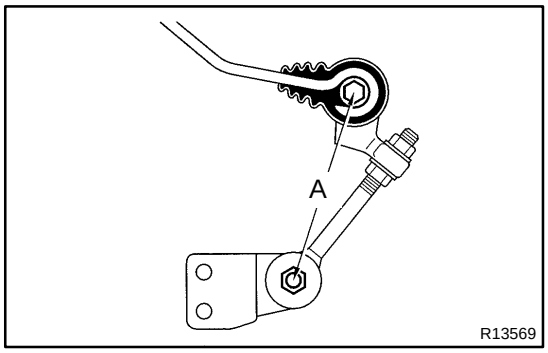

3. CONNECT SHACKLE NO. 2 TO SHACKLE BRACKET

(a) Install teh shackle No. 2 to the shackle No. 1 with the 2 nuts.

(b) Set dimension A.
Initial set:

2WD (except pre runner)	78 mm (3.07 in.)
4WD and pre runner	120 mm (4.72 in.)

(c) Tighten the lock nut.
Torque: 13 N·m (130 kgf·cm, 9 ft·lbf)

(d) Install the shackle No. 2 with the 2 cushions and collar to the shackle bracket.

(e) Install the nut to fix the cushion retainer.
Torque: 13 N·m (130 kgf·cm, 9 ft·lbf)

4. SET REAR AXLE LOAD (See page BR–46)

5. SET VALVE BODY

(a) When pulling down the load sensing spring, confirm that the valve piston moves down smoothly.

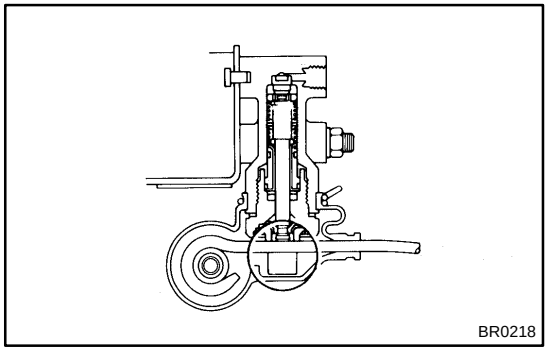

(b) Position the valve body so that the valve piston lightly contacts the load sensing spring.

(c) Tighten the valve body mounting nuts.
Torque: 13 N·m (130 kgf·cm, 9 ft·lbf)

6. BLEED BRAKE LINE (See page BR–4)

7. CHECK AND ADJUST LSP & BV FLUID PRESSURE (See page BR–46)

LOAD SENSING PROPORTIONING AND BY–PASS VALVE (LSP & BV)

BR05I–05

ON–VEHICLE INSPECTION

HINT:

Pre runner is the described below.

RZN191L–TRPDKAB, RZN196L–CRPDKAB, RZN196L–PRPDKAB, VZN195L–CRPDKAB, VZN195L–PRPDKAB

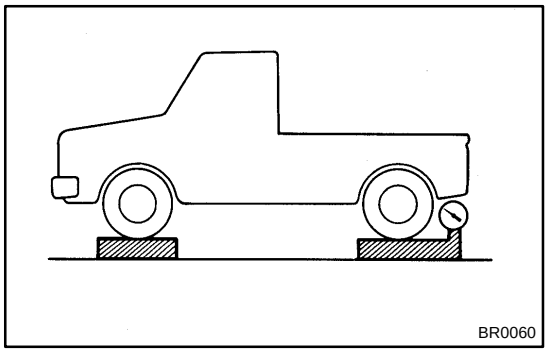

BR0060

1. SET REAR AXLE LOAD

Rear axle load (includes vehicle weight):

2WD (except pre runner)	700 kg (1,543 lb)
4WD and pre runner	850 kg (1,874 lb)

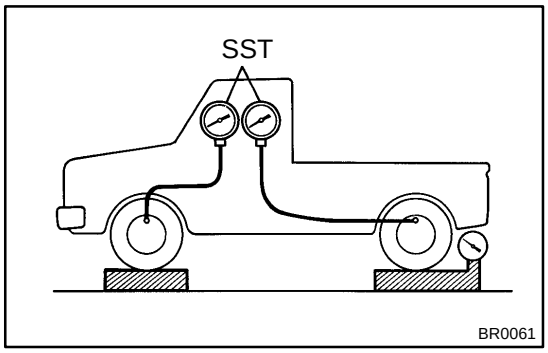

BR0061

2. INSTALL LSP & BV GAUGE (SST) AND BLEED AIR

SST 09709–29018

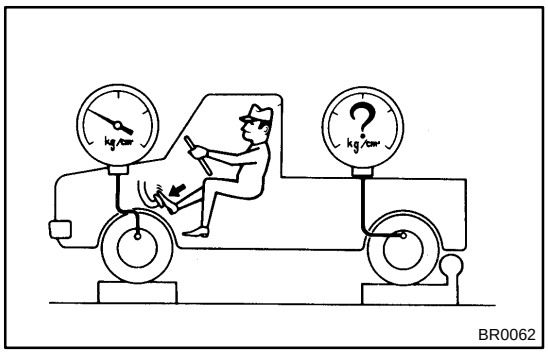

BR0062

3. RAISE FRONT BRAKE PRESSURE TO 7,845 kPa (80 kgf/cm^2, 1,138 psi) AND CHECK REAR BRAKE PRESSURE

Rear brake pressure:

2WD (except pre runner)	4,913 ± 490 kPa (50.1 ± 5 kgf/cm^2, 713 ± 71 psi)
4WD and pre runner	4,383 ± 490 kPa (44.7 ± 5 kgf/cm^2, 636 ± 71 psi)

HINT:

The brake pedal should not be depressed twice and/or returned while setting to the specified pressure. Read the value of rear brake pressure 2 seconds after adjusting the specified fluid pressure. If the brake pressure is incorrect, adjust the fluid pressure.

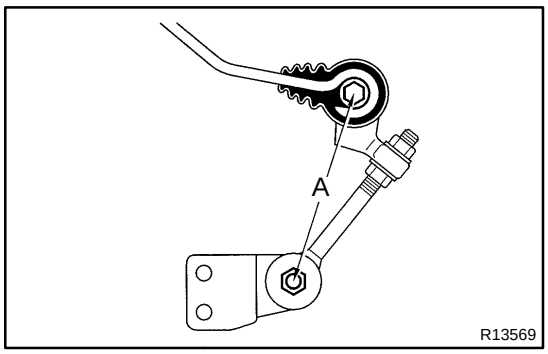

4. IF NECESSARY, ADJUST FLUID PRESSURE

(a) Adjust the length of the No. 2 shackle.
Low pressure – Lengthen A
High pressure – Shorten A

Initial set:

2WD (except pre runner)	78 mm (3.07 in.)
4WD and pre runner	120 mm (4.72 in.)

Adjustment range:

2WD (except pre runner)	70 – 86 mm (2.76 – 3.39 in.)
4WD and pre runner	112 – 128 mm (4.41 – 5.04 in.)

HINT:
One turn of the nut changes the fluid pressure as shown in the following table.

Rear brake pressure:

2WD (except pre runner)	55 kPa (0.56 kgf/cm^2, 8.0 psi)
4WD and pre runner	52 kPa (0.53 kgf/cm^2, 7.5 psi)

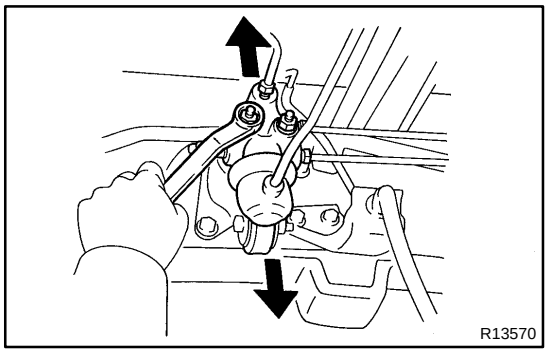

(b) If the pressure cannot be adjusted by the No. 2 shackle, raise or lower the valve body.
Low pressure – Lower body
High pressure – Raise body

(c) Torque the nuts.
Torque: 13 N·m (130 kgf·cm, 9 ft·lbf)

(d) Adjust the length of the No. 1 shackle again.

If it cannot be adjusted, inspect the valve housing.

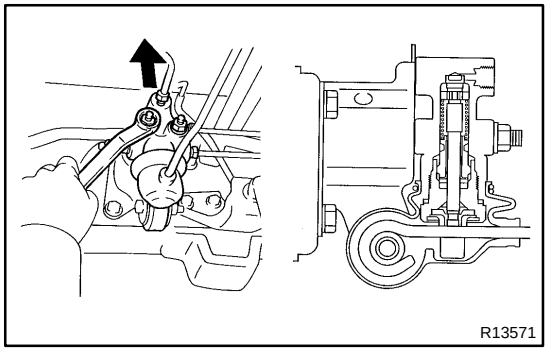

5. IF NECESSARY, CHECK VALVE BODY

(a) Assemble the valve body in the uppermost position.

HINT:
When the brakes are applied, the position will move down about 0.8 mm (0.03 in.). Even at this time, the piston should not make contact with or move the load sensing spring.

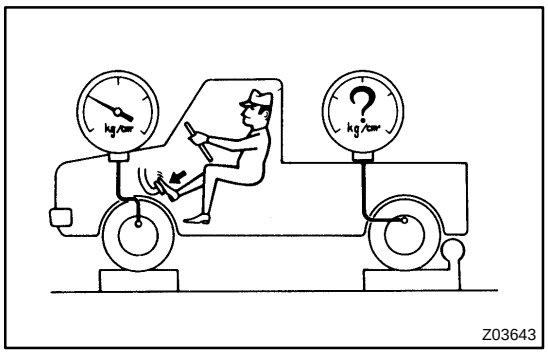

(b) In this position, check the rear brake pressure.

2WD (except pre runner):

Front brake pressure kPa (kgf/cm^2, psi)	Rear brake pressure kPa (kgf/cm^2, psi)
1,960 (20, 285)	1,960 (20, 285)
3,920 (40, 570)	2,450 ± 196 (25 ± 2.0, 356 ± 28.5)
6,860 (70, 997.5)	3,190 ± 343 (32.5 ± 3.5, 463 ± 50)

4WD and pre runner:

Front brake pressure kPa (kgf/cm^2, psi)	Rear brake pressure kPa (kgf/cm^2, psi)
1,470 (15, 213.5)	1,470 (15, 213.5)
3,920 (40, 570)	1,960 ± 196 (20 ± 2.0, 285 ± 28.5)
6,860 (70, 997.5)	2,550 ± 343 (26 ± 3.5, 370.5± 50)

If the measured value is not within the standard, replace the valve body.

BR05N–04

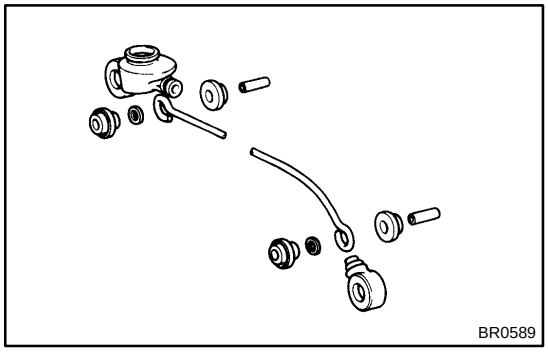
BR0589

REASSEMBLY

1. ASSEMBLE LOAD SENSING SPRING

(a) Install the load sensing valve boot and load sensing spring boot.

(b) Install the 2 rubber plates, 2 collars and 4 bushings.

HINT:

- Apply lithium soap–base glycol grease to all rubbing areas.

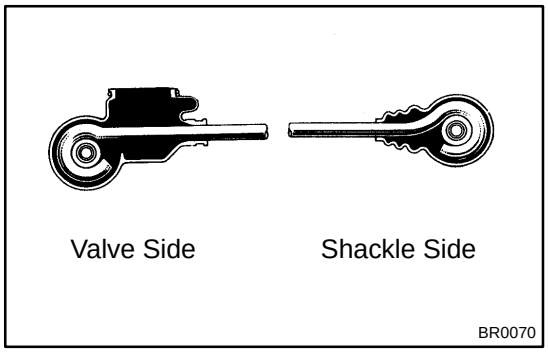

BR0070

- Do not mistake the valve side for the shackle side of the load sensing spring.

2. INSTALL SHACKLE NO. 1 AND NO. 2

(a) Install the lock nut washer and shackle No. 1 to the shackle No. 2.

(b) Torque the nut.

Torque: 13 N·m (130 kgf·cm, 9 ft·lbf)

3. INSTALL LOAD SENSING SPRING TO SHACKLE NO. 1

(a) Install the load sensing spring and 2 plate washers to the shackle No. 1.

(b) Install the bolt and nut.

Torque: 18 N·m (185 kgf·cm, 13 ft·lbf)

4. INSTALL LOAD SENSING SPRING TO VALVE BODY

Install the load sensing spring to the load sensing valve with the clip.

5. INSTALL VALVE BRACKET

(a) 2WD (except pre runner):
Install the set plate to the valve assembly through the valve bracket and temporarily tighten the 2 valve body mounting nuts with flexible hose bracket.

(b) 4WD and pre runner:
Install the set plate to the valve assembly through the valve bracket and temporarily tighten the 2 valve body mounting nuts.

(c) Install the bolt and nut with the 2 plate washers.

Torque: 13 N·m (130 kgf·cm, 9 ft·lbf)

BR05K–04

REMOVAL

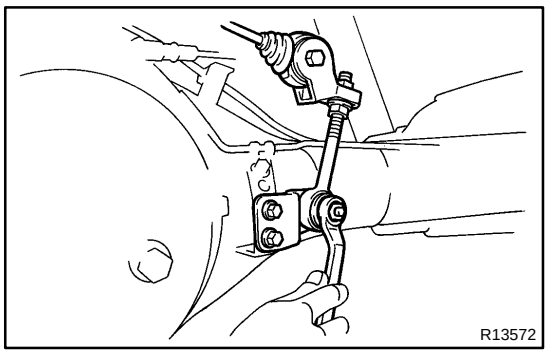

1. DISCONNECT SHACKLE NO. 2 FROM BRACKET

(a) Remove the nut and disconnect the shackle No. 2.

(b) Remove the cushion retainer, 2 cushions and collar.

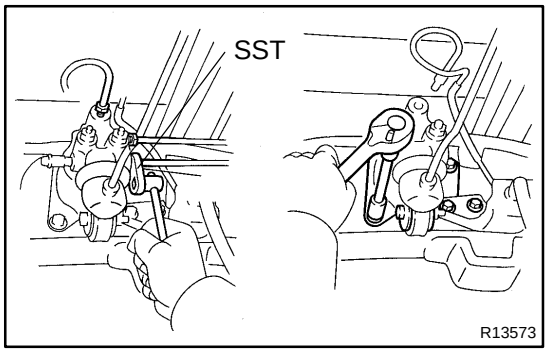

2. REMOVE LSP & BV ASSEMBLY

(a) Using SST, disconnect the brake lines from the valve body.
SST 09023–00100

(b) 2WD (except pre runner):
Remove the clip from the flexible hose bracket.

(c) 2WD (except pre runner):
Remove the 3 valve bracket mounting bolts and spacer, and remove the LSP & BV assembly.

(d) 4WD and pre runner:
Remove the 3 valve bracket mounting bolts, spacer and flexible hose bracket mounting bolt, and remove the LSP & BV assembly and flexible hose bracket.

PARKING BRAKE LEVER

BR04J–03

ON–VEHICLE INSPECTION

HINT:

Pre runner is the described below.

RZN191L–TRPDKAB, RZN196L–CRPDKAB, RZN196L–PRPDKAB, VZN195L–CRPDKAB, VZN195L–PRPDKAB

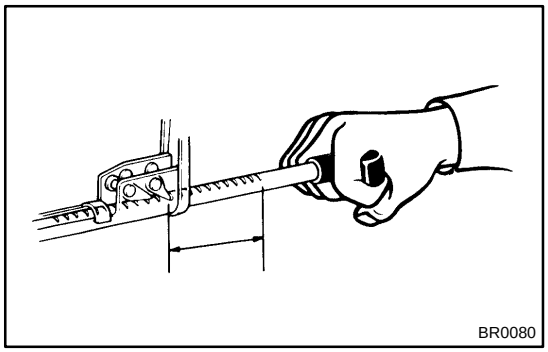

1. CHECK PARKING BRAKE LEVER TRAVEL

Pull the parking brake lever all the way up, and count the number of clicks.

Parking brake lever travel at 196 N (20 kgf, 44.1 lbf): 12 – 18 clicks

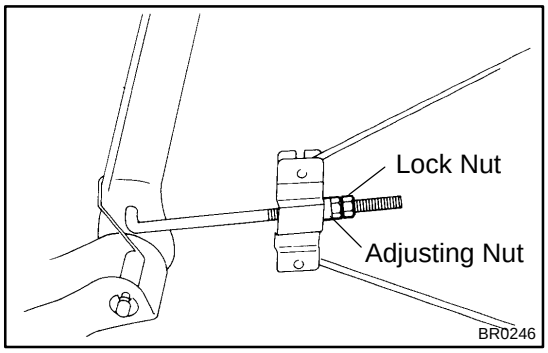

2. 2WD (except pre runner): IF NECESSARY, ADJUST PARKING BRAKE

HINT:

Before adjusting the parking brake, make sure that the rear brake shoe clearance has been adjusted.

(a) Loosen the lock nut.

(b) Tighten the adjusting nut until the travel is correct. Then tighten the lock nut.

(c) After adjusting the parking brake, confirm that the rear brakes are not dragging.

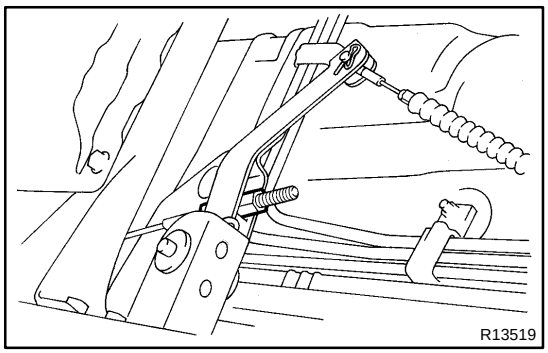

3. 4WD and pre runner: IF NECESSARY, ADJUST PARKING BRAKE

HINT:

Before adjusting the parking brake, make sure that the rear brake shoe clearance has been adjusted.

(a) Tighten 1 of the adjusting nuts of the intermediate lever while loosening the other one until the travel is correct. Tighten the 2 adjusting nuts.

(b) After adjusting the parking brake, confirm that the bell-crank stopper screw comes into contact with the backing plate.

REAR DRUM BRAKE (2WD)

COMPONENTS

BR05A–02

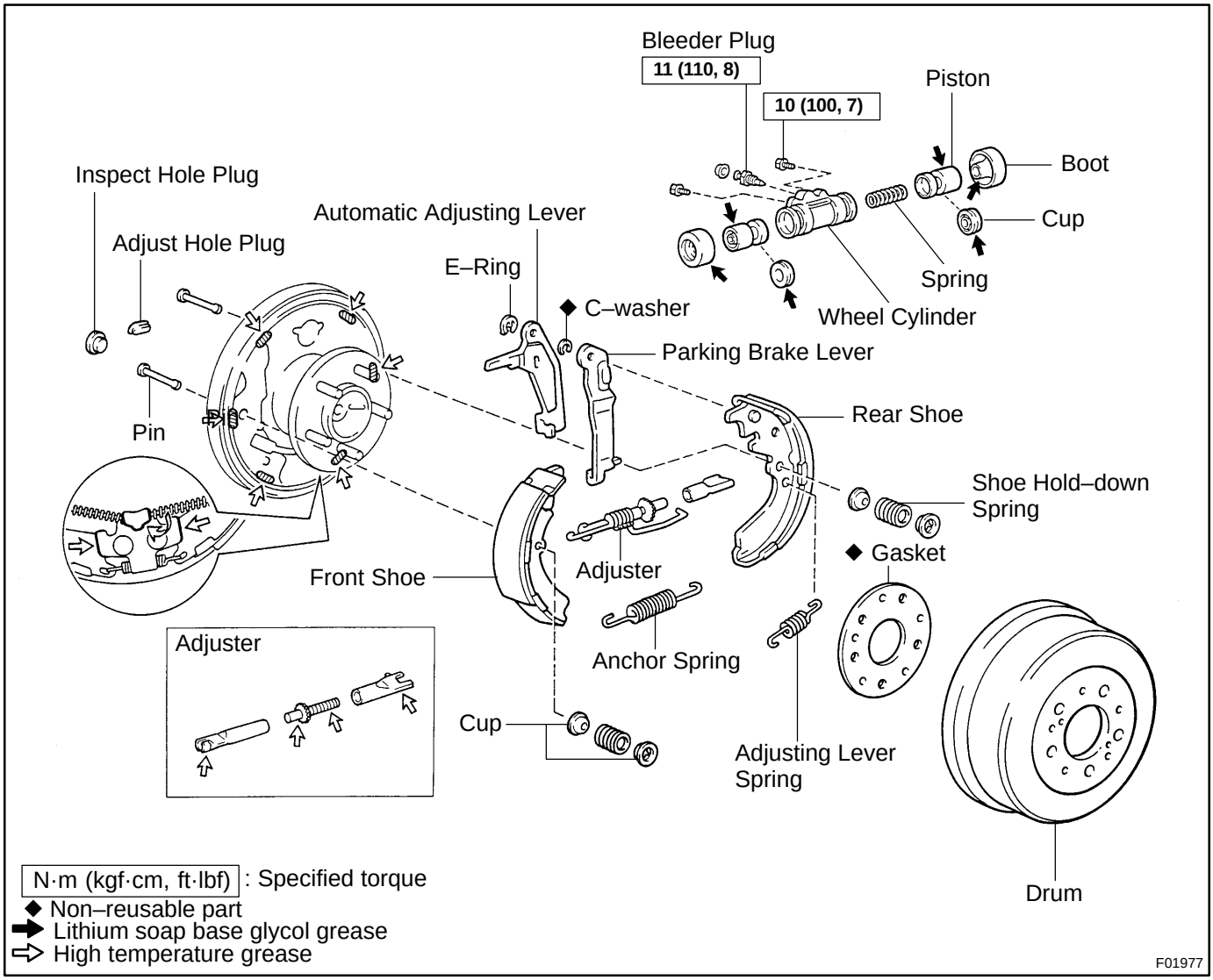

BR05C–03

INSPECTION

1. INSPECT DISASSEMBLED PARTS

Inspect the disassembled parts for wear, rust or damage.

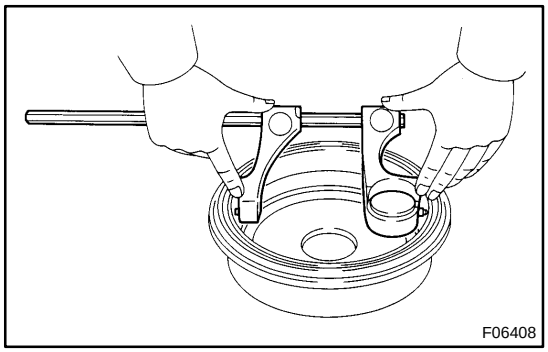

2. MEASURE BRAKE DRUM INSIDE DIAMETER

Using a brake drum gauge or equivalent, measure the inside diameter of the drum.

Standard inside diameter: 254.0 mm (10.000 in.)
Maximum inside diameter: 256.0 mm (10.079 in.)

If the drum is scored or worn, the brake drum may be lathed to the maximum inside diameter.

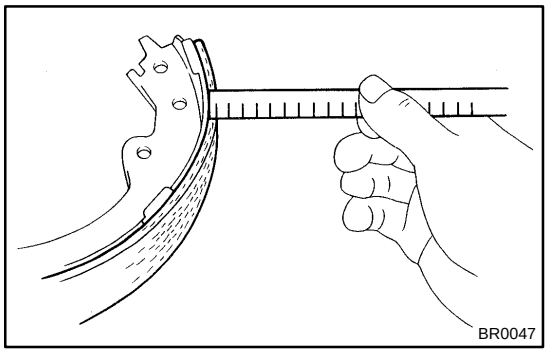

3. MEASURE BRAKE SHOE LINING THICKNESS

Using a ruler, measure the shoe lining thickness.

Standard thickness: 5.6 mm (0.220 in.)
Minimum thickness: 1.0 mm (0.039 in.)

If the shoe lining is less than minimum, or shows signs of uneven wear, replace the brake shoes.

HINT:

If any of the brake shoes have to be replaced, replace all of the rear brake shoes in order to maintain even braking.

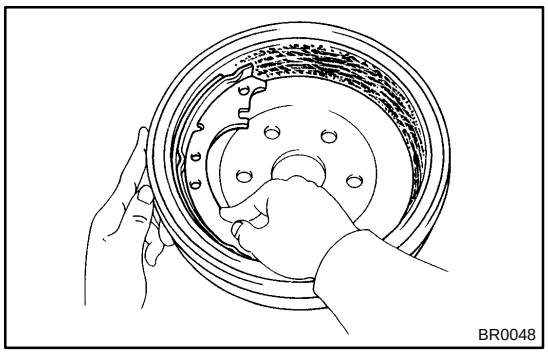

4. INSPECT BRAKE LINING AND DRUM FOR PROPER CONTACT

If the contact between the brake lining and drum is improper, repair the lining with a brake shoe grinder, or replace the brake shoe assembly.

BR05D–03

INSTALLATION

Installation is in the reverse order of removal (See page BR–37).

NOTICE:

Apply lithium soap base glycol grease and high temperature grease to the parts indicated by the arrows (See page BR–36).

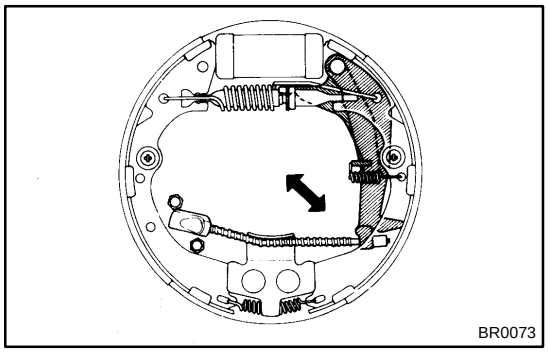

1. CHECK OPERATION OF AUTOMATIC ADJUSTER MECHANISM

(a) Move the parking brake lever of the rear shoe back and forth, as shown. Check that the adjusting bolt turns.

If it does not turn, check for incorrect installation of the rear brakes.

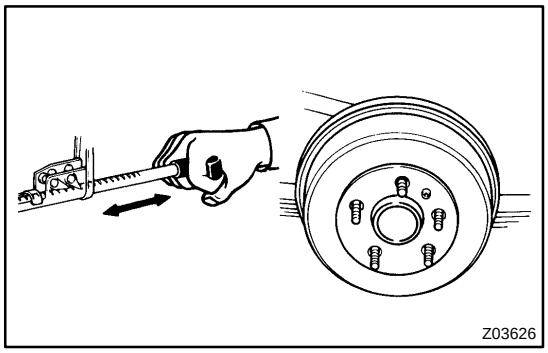

(b) Adjust the adjuster length to the shortest possible amount.

(c) Install the drum.

(d) Pull the parking brake lever all the way up until a clicking sound can no longer be heard.

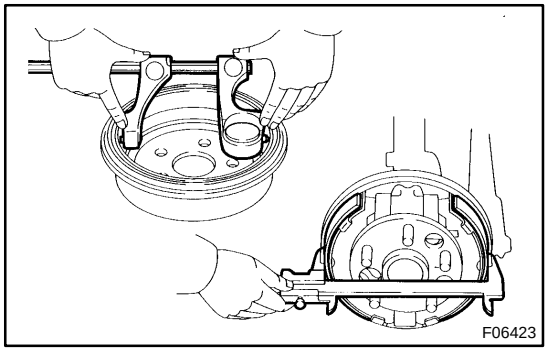

2. CHECK CLEARANCE BETWEEN BRAKE SHOES AND DRUM

(a) Remove the drum.

(b) Measure the brake drum inside diameter and diameter of the brake shoes. Check that the difference between the diameters is the correct shoe clearance.

Shoe clearance: 0.6 mm (0.024 in.)

If it is incorrect, check the parking brake system.

3. FILL BRAKE RESERVOIR WITH BRAKE FLUID

4. BLEED BRAKE SYSTEM (See page BR–4)

5. CHECK FOR LEAKS

BR05B–02

REMOVAL

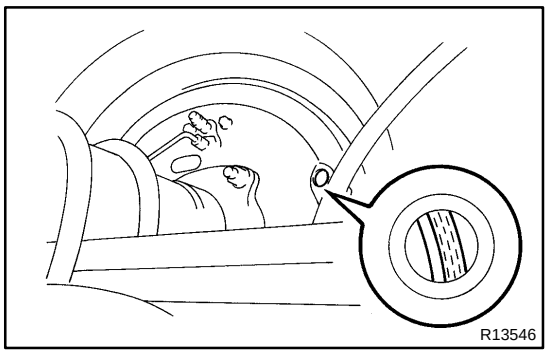

1. INSPECT SHOE LINING THICKNESS

Remove the inspection hole plug, and check the shoe lining thickness through the hole.

If it is less than minimum, replace the shoes.

Minimum thickness: 1.0 mm (0.039 in.)

2. REMOVE REAR WHEEL

Torque: 103 N·m (1,050 kgf·cm, 76 ft·lbf)

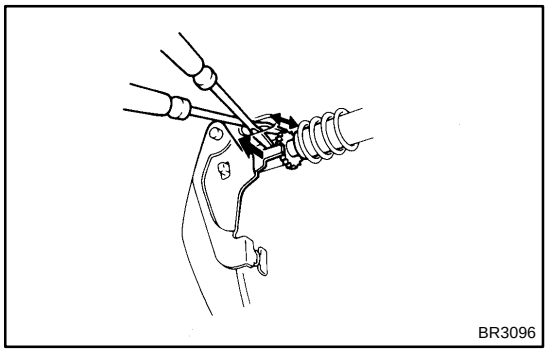

3. REMOVE BRAKE DRUM

(a) Release the parking brake lever and remove the brake drum.

HINT:

If the brake drum cannot be removed easily, do the following steps.

(b) Remove the adjusting hole plug in the backing plate.

(c) Insert a screwdriver through the hole in the backing plate, and hold the automatic adjusting lever away from the adjusting bolt.

(d) Using another screwdriver, reduce the brake shoe adjustment by turning the adjusting bolt.

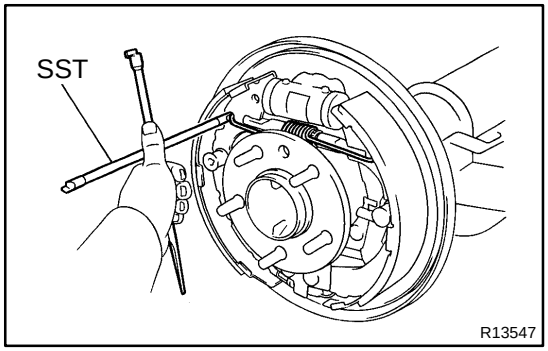

4. REMOVE FRONT SHOE

(a) Using SST, disconnect the return spring.
SST 09703–30010

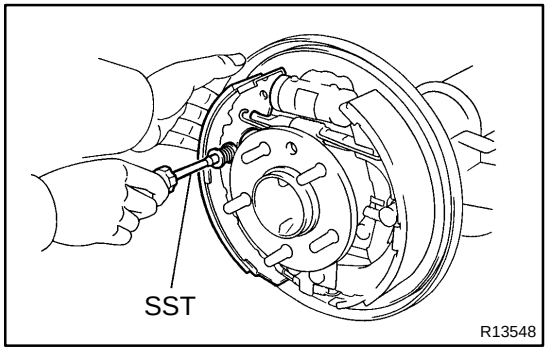

(b) Using SST, remove the shoe hold–down spring, 2 cups and pin.
SST 09718–00010

(c) Disconnect the anchor spring from the front shoe and remove the front shoe.

(d) Remove the anchor spring from the rear shoe.

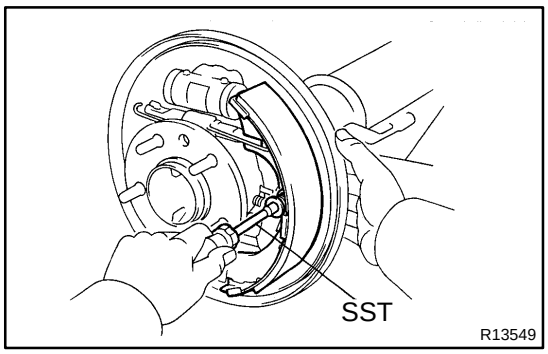

5. REMOVE ADJUSTER AND REAR SHOE

(a) Using SST, remove the shoe hold–down spring, 2 cups and pin.
SST 09718–00010
(b) Remove the adjusting lever spring.
(c) Remove the adjuster together with the return spring.
(d) Using pliers, disconnect the parking brake cable from the lever and remove the rear shoe.

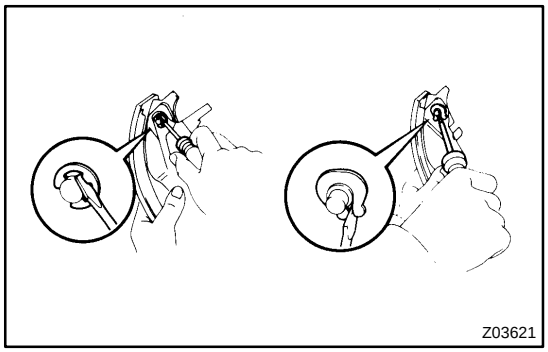

6. REMOVE AUTOMATIC ADJUSTING LEVER AND PARKING BRAKE LEVER

(a) Remove the E–ring.
(b) Remove the automatic adjusting lever.
(c) Remove the C–washer.
(d) Remove the parking brake lever.

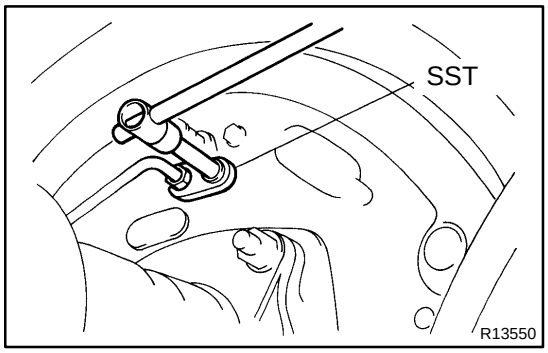

7. DISCONNECT BRAKE LINE FROM WHEEL CYLINDER

Using SST, disconnect the brake line. Use a container to catch the brake fluid.
SST 09023–00100
Torque: 15 N·m (155 kgf·cm, 11 ft·lbf)

8. REMOVE WHEEL CYLINDER

Remove the 2 bolts and wheel cylinder.
Torque: 10 N·m (100 kgf·cm, 7 ft·lbf)

9. DISASSEMBLE WHEEL CYLINDER

(a) Remove the 2 boots, 2 pistons and spring.
(b) Remove the 2 piston cups from each piston.

REAR DRUM BRAKE (4WD and PRE RUNNER)

BR05E–05

COMPONENTS

HINT:

Pre runner is the described below.

RZN191L–TRPDKAB, RZN196L–CRPDKAB, RZN196L–PRPDKAB, VZN195L–CRPDKAB, VZN195L–PRPDKAB

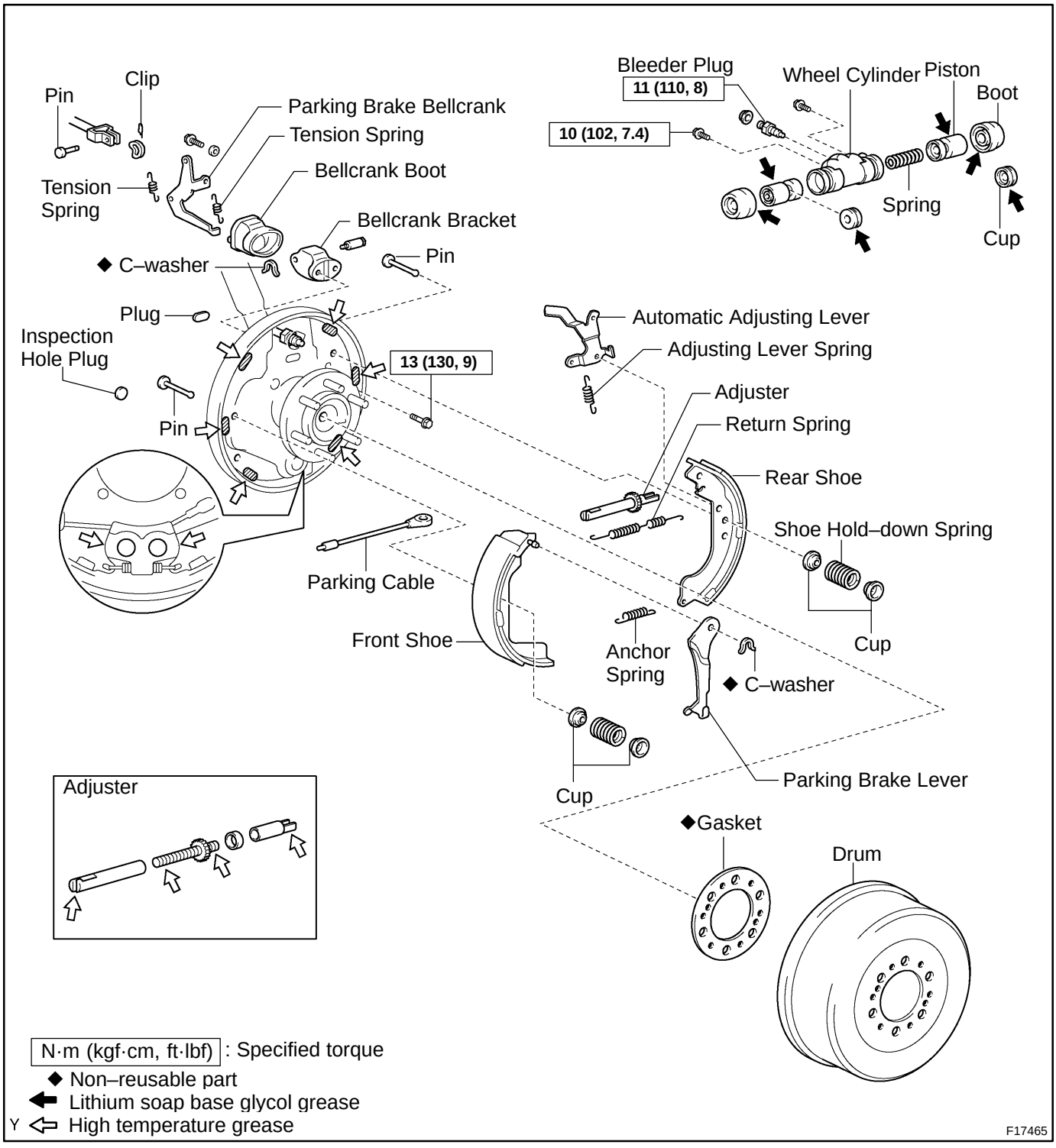

BR1UW–01

INSPECTION

1. INSPECT DISASSEMBLED PARTS

Inspect the disassembled parts for wear, rust or damage.

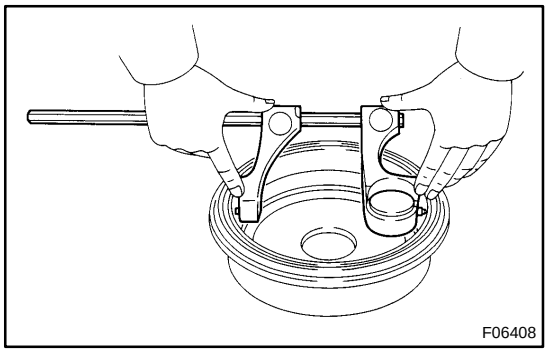

2. MEASURE BRAKE DRUM INSIDE DIAMETER

Using a brake drum gauge or equivalent, measure the inside diameter of the drum.

Standard inside diameter: 295.0 mm (11.614 in.)

Maximum inside diameter: 297.0 mm (11.693 in.)

If the drum is scored or worn, the brake drum may be lathed to the maximum inside diameter.

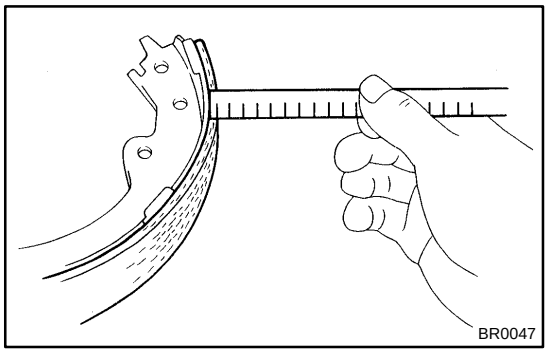

3. MEASURE BRAKE SHOE LINING THICKNESS

Using a ruler, measure the shoe lining thickness.

Standard thickness: 6.0 mm (0.236 in.)

Minimum thickness: 1.0 mm (0.039 in.)

If the shoe lining is less than the minimum, or shows signs of uneven wear, replace the brake shoes.

HINT:

If any of the brake shoes have to be replaced, replace all of the rear brake shoes in order to maintain even braking.

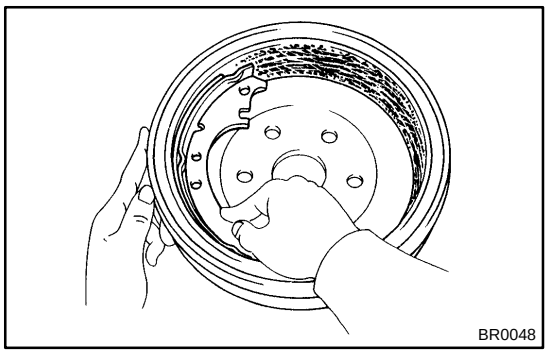

4. INSPECT BRAKE LINING AND DRUM FOR PROPER CONTACT

If the contact between the brake lining and drum is improper, repair the lining with a brake shoe grinder, or replace the brake shoe assembly.

BR1UX–01

INSTALLATION

Installation is in the reverse order of removal (See page BR–42).

NOTICE:

Apply lithium soap base glycol grease and high temperature grease to the parts indicated by the arrows (See page BR–41).

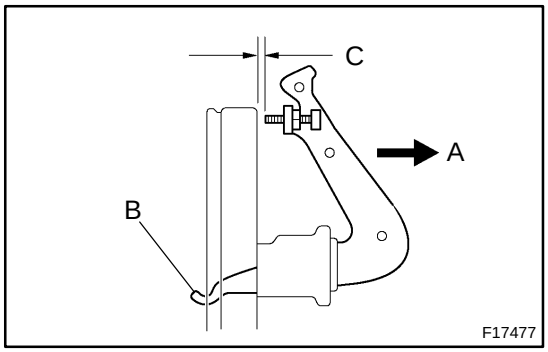

1. ADJUST BELLCRANK

(a) Lightly pull the bellcrank in direction ”A” until there is no slack at part ”B”.

(b) In this condition, turn the adjusting bolt so that dimension ”C” will be 0.4 – 0.8 mm (0.016 – 0.031 in.).

(c) Lock the adjusting bolt with the lock nut.

(d) Connect the parking brake cable to the parking brake bellcrank and install the clip.

(e) Install the 2 tension springs.

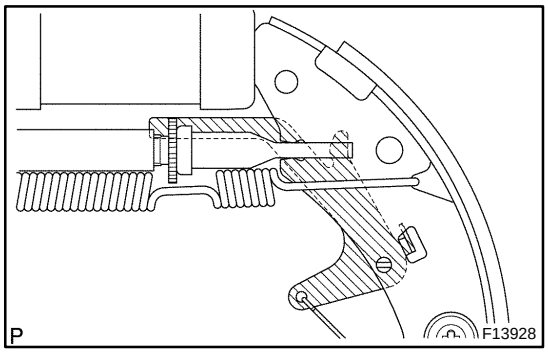

2. CHECK AUTOMATIC ADJUSTING LEVER

Check that the automatic adjusting lever is properly installed.

If it is not incorrect, check for incorrect installation of the rear brakes.

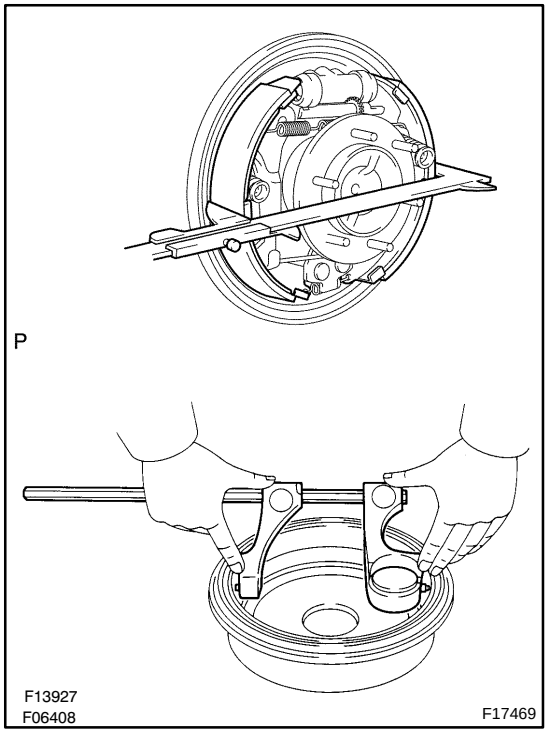

3. CHECK CLEARANCE BETWEEN BRAKE SHOES AND DRUM

(a) Remove the drum.

(b) Measure the brake drum inside diameter and diameter of the brake shoes. Check that the difference between the diameters is the correct shoe clearance.

Shoe clearance: 0.5 mm (0.020 in.)

If it is incorrect, check the parking brake system.

4. FILL BRAKE RESERVOIR WITH BRAKE FLUID

5. BLEED BRAKE SYSTEM (See page BR–4)

6. CHECK FOR LEAKS

BR05F–03

REMOVAL

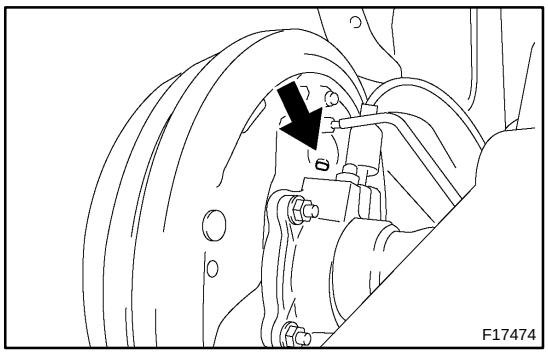

1. INSPECT SHOE LINING THICKNESS

Remove the inspection hole plug, and check the shoe lining thickness through the hole.

If less than the minimum, replace the shoes.

Minimum thickness: 1.0 mm (0.039 in.)

2. REMOVE REAR WHEEL

Torque: 110 N·m (1,150 kgf·cm, 83 ft·lbf)

3. RELEASE PARKING BRAKE LEVER

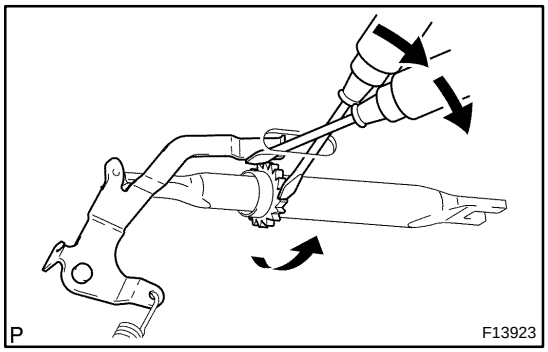

4. REMOVE BRAKE DRUM

HINT:

If the brake drum cannot be removed easily, do the following steps.

(a) Remove the adjusting hole plug in the backing plate.

(b) Insert a screwdriver through the hole in the backing plate, and hold the automatic adjusting lever away from the adjusting bolt.

(c) Using the other screwdriver, reduce the brake shoe adjustment by turning the adjusting bolt.

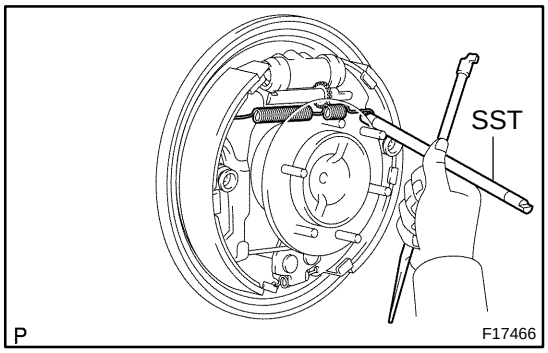

5. REMOVE REAR SHOE

(a) Using SST, disconnect the return spring from the shoe.
SST 09703–30010

(b) Remove the return spring from the front shoe.

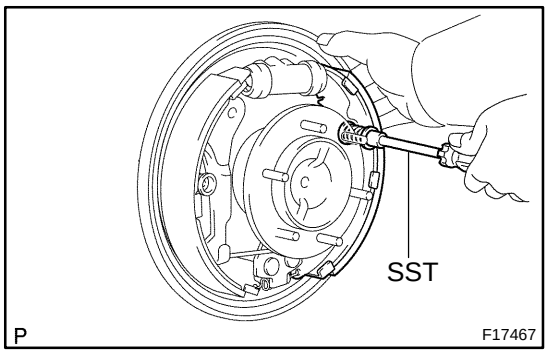

(c) Using SST, remove the shoe hold–down spring, cups and pin.
SST 09718–00010

(d) Remove the adjuster.

(e) Using needle–nose pliers, remove the adjusting lever spring.

(f) Remove the automatic adjusting lever.

(g) Disconnect the anchor spring from the rear shoe and remove the rear shoe.

(h) Remove the anchor spring from the front shoe.

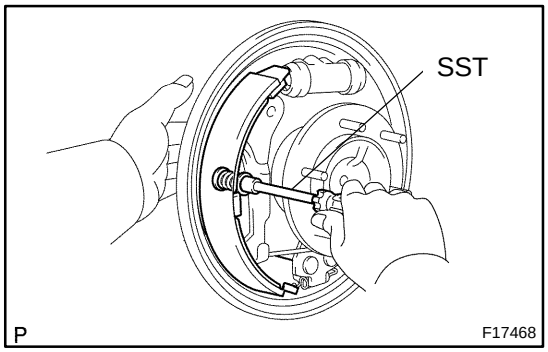

6. REMOVE FRONT SHOE

(a) Using SST, remove the shoe hold–down spring, cups and pin.
SST 09718–00010

(b) Disconnect the parking brake cable from the front shoe.

(c) Remove the front shoe and parking brake cable.

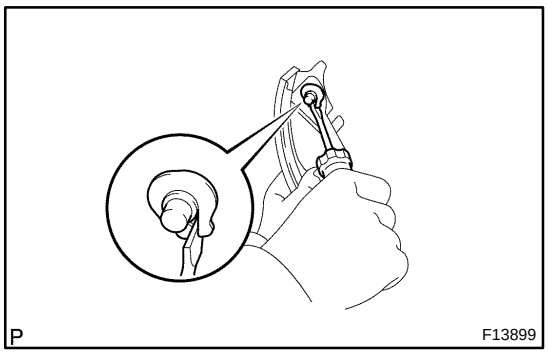

7. REMOVE PARKING BRAKE LEVER

(a) Using a screwdriver, remove the C–washer.

(b) Remove the parking brake lever.

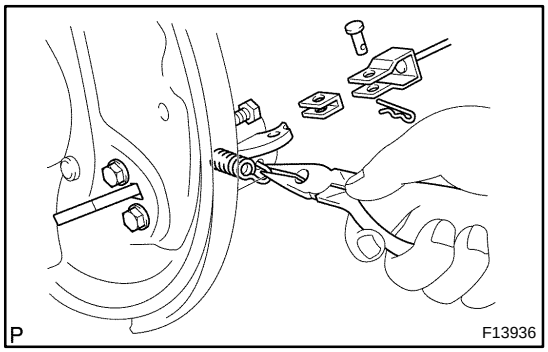

8. REMOVE AND DISASSEMBLE PARKING BRAKE BELLCRANK

(a) Remove the clip and disconnect the parking brake cable.

(b) Remove the 2 tension springs.

(c) Remove the 2 bolts and bellcrank.
Torque: 13 N·m (130 kgf·cm, 9 ft·lbf)

(d) Remove the bellcrank boot from the bellcrank bracket.

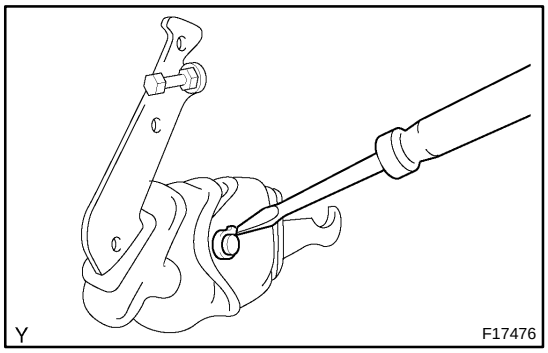

(e) Using a screwdriver, remove the C–washer and pin.

(f) Remove the parking brake bellcrank from the bellcrank bracket.

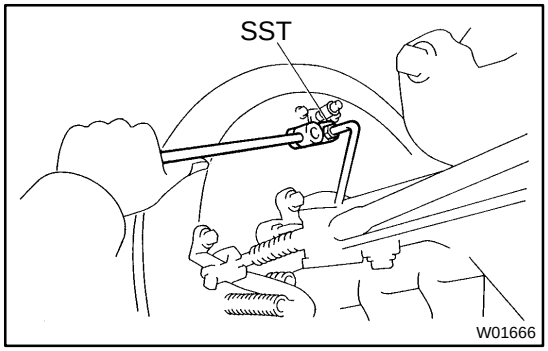

9. REMOVE WHEEL CYLINDER

(a) Using SST, disconnect the brake line. Use a container to catch the brake fluid.
Torque: 15 N·m (155 kgf·cm, 11 ft·lbf)
SST 09023–00100

(b) Remove the 2 bolts and the wheel cylinder.
Torque: 10 N·m (102 kgf·cm, 7.4 ft·lbf)

10. DISASSEMBLE WHEEL CYLINDER

(a) Remove the 2 boots from the wheel cylinder.

(b) Remove the 2 pistons and spring.

(c) Remove the 2 cups from the each piston.

REAR SPEED SENSOR

BR05X–04

COMPONENTS

HINT:

Pre runner is the described below.

RZN191L–TRPDKAB, RZN196L–CRPDKAB, RZN196L–PRPDKAB, VZN195L–CRPDKAB, VZN195L–PRPDKAB

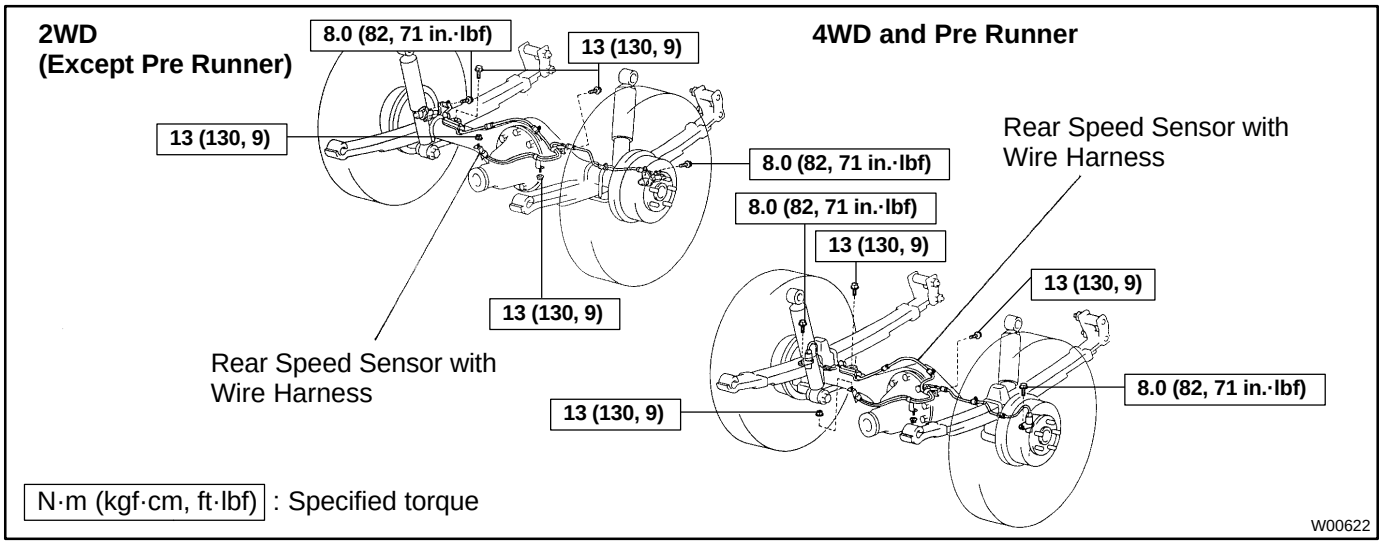

BR05Z–02

INSTALLATION

Installation is in the reverse order of removal (See page BR–62).

NOTICE:

After installation, check the speed sensor signal (See page DI–534).

BR05Y–03

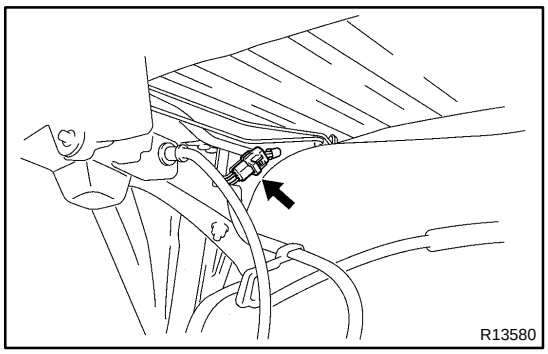

REMOVAL

REMOVE SPEED SENSOR

(a) Disconnect the speed sensor connector, and pull out the sensor wire harness with grommet.

(b) Remove the 5 resin clips, 2 clamp set bolts and 2 nuts holding the sensor wire harness from the side rail, fuel tank and axle housing.
Torque: 13 N·m (130 kgf·cm, 9 ft·lbf)

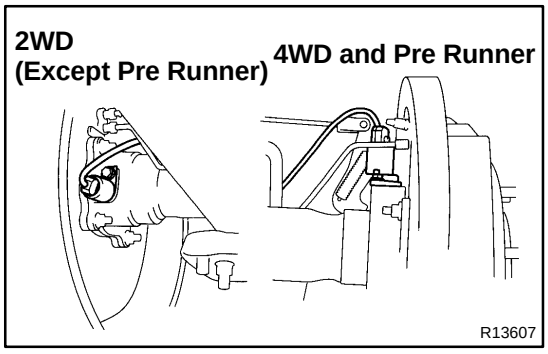

(c) Remove the 2 mounting bolts and speed sensor.
Torque: 8.0 N·m (82 kgf·cm, 71 in.·lbf)

NOTICE:

At the time of installation, please refer to the following items.

- **There are no objects on the sensor or the part of the axle end to which the sensor is to be installed.**
- **The sensor is installed flat against the axle end when you tighten the bolt.**
- **When installing the resin clips, use new ones.**

TROUBLESHOOTING

BR04G–02

PROBLEM SYMPTOMS TABLE

Use the table below to help you find the cause of the problem. The numbers indicate the priority of the likely cause of the problem. Check each part in order. If necessary, replace these parts.

Symptom	Suspect Area	See page
Low pedal or spongy pedal	4. Fluid leaks for brake system	DI–585
	5. Air in brake system	BR–4
	6. Piston seals (Worn or damaged)	BR–24 BR–30
	7. Rear brake shoe clearance (Out of adjustment)	BR–40 BR–45
	8. Master cylinder (Faulty)	BR–9
	9. Booster push rod (Out of adjustment)	BR–18
Brake drag	1. Brake pedal freeplay (Minimum)	BR–6
	2. Parking brake lever travel (Out of adjustment)	BR–8
	3. Parking brake wire (Sticking)	–
	4. Rear brake shoe clearance (Out of adjustment)	BR–40 BR–45
	5. Pad or lining (Cracked or distorted)	BR–19 BR–22 BR–37 BR–41
	6. Piston (Stuck)	BR–24 BR–30 BR–36 BR–41
	7. Piston (Frozen)	BR–24 BR–30 BR–36 BR–41
	8. Anchor or return spring (Faulty)	BR–36 BR–41
	9. Booster push rod (Out of adjustment)	BR–18
	10. Booster system (Vacuum leaks)	BR–15
	11. Master cylinder (Faulty)	BR–9
Brake pull	1. Piston (Stuck)	BR–24 BR–30 BR–36 BR–41
	2. Pad or lining (Oily)	BR–19 BR–22 BR–37 BR–41
	3. Piston (Frozen)	BR–24 BR–30 BR–36 BR–41
	4. Disc (Scored)	BR–27 BR–33
	5. Pad or lining (Cracked or distorted)	BR–19 BR–22 BR–37 BR–41

Hard pedal but brake inefficient	1. Fluid leaks for brake system	DI–585
	2. Air in brake system	BR–4
	3. Pad or lining (Worn)	BR–19 BR–22 BR–36 BR–41
	4. Pad or lining (Cracked or distorted)	BR–19 BR–22 BR–36 BR–41
	5. Rear brake shoe clearance (Out of adjustment)	BR–40 BR–45
	6. Pad or lining (Oily)	BR–19 BR–22 BR–36 BR–41
	7. Pad or lining (Glazed)	BR–19 BR–22 BR–36 BR–41
	8. Disc (Scored)	BR–27 BR–33
	9. Booster push rod (Out of adjustment)	BR–18
	10.Booster system (Vacuum leaks)	BR–15
Noise from brakes	1. Pad or lining (Cracked or distorted)	BR–19 BR–22 BR–36 BR–41
	2. Installation bolt (Loose)	BR–24 BR–30
	3. Disc (Scored)	BR–27 BR–33
	4. Pad support plate (Loose)	BR–19
	5. Sliding pin (Worn)	BR–24
	6. Pad or lining (Dirty)	BR–19 BR–22 BR–36 BR–41
	7. Pad or lining (Glazed)	BR–19 BR–22 BR–36 BR–41
	8. Anchor or return spring (Faulty)	BR–36 BR–41
	9. Anti–squeal shim (Damaged)	BR–19 BR–22
	10.Shoe hold–down spring (Damaged)	BR–36 BR–41

CH0L1–01

ON–VEHICLE INSPECTION

CAUTION:

- **Check that the battery cables are connected to the correct terminals.**
- **Disconnect the battery cables when the battery is given a quick charge.**
- **Do not perform tests with a high voltage insulation resistance tester.**
- **Never disconnect the battery while the engine is running.**

1. CHECK BATTERY ELECTROLYTE LEVEL

Check the electrolyte quantity of each cell.

Maintenance–Free Battery:

If under the lower level, replace the battery (or add distilled water if possible) and check the charging system.

Except Maintenance–Free Battery:

If under the lower level, add distilled water.

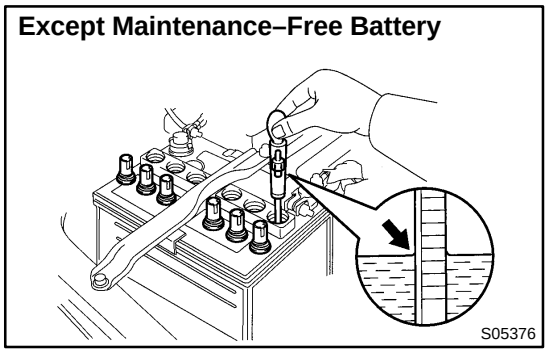

2. Except Maintenance–Free Battery: CHECK BATTERY SPECIFIC GRAVITY

Check the specific gravity of each cell.

Standard specific gravity: 1.25 – 1.29 at 20˚C (68˚F)

If the specific gravity is less than specification, charge the battery.

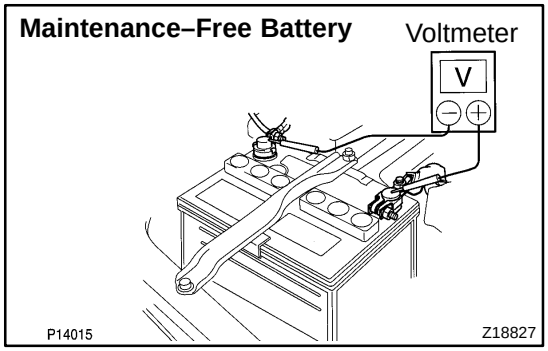

3. Maintenance–Free Battery: CHECK BATTERY VOLTAGE

(a) After having driven the vehicle and in the case that 20 minutes have not passed after having stopped the engine, turn the ignition switch ON and turn on the electrical system (headlight, blower motor, rear defogger etc.) for 60 seconds to remove the surface charge.

(b) Turn the ignition switch OFF and turn off the electrical systems.

(c) Measure the battery voltage between the negative (–) and positive (+) terminals of the battery.

Standard voltage: 12.5 – 12.9 V at 20˚C (68˚F)

If the voltage is less than specification, charge the battery.

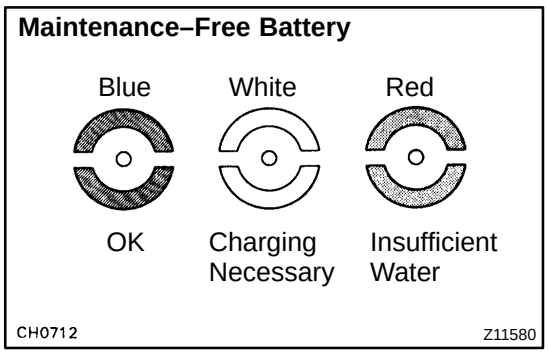

HINT:
Check the indicator as shown in the illustration.

4. CHECK BATTERY TERMINALS, FUSIBLE LINK AND FUSES

(a) Check that the battery terminals are not loose or corroded.

If the terminals are corroded, clean the terminals.

(b) Check the H–fuse, M–fuses and fuses for continuity.

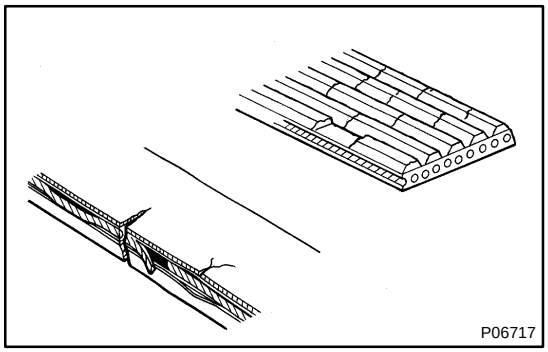

5. INSPECT DRIVE BELT

(a) Visually check the belt for excessive wear, frayed cords etc.

If any defect has been found, replace the drive belt.

HINT:
Cracks on the rib side of a belt are considered acceptable. If the belt has chunks missing from the ribs, it should be replaced.

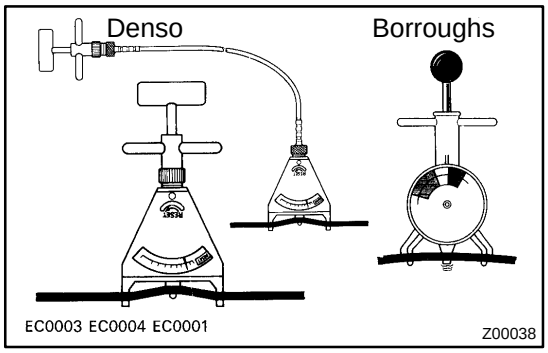

(b) Using a belt tension gauge, measure the belt tension.
Belt tension gauge:
DENSO BTG–20 (95506–00020)
Borroughs No. BT–33–73F
Drive belt tension:

New belt	116 – 169 lbf
Used belt	66 – 88 lbf

If the belt tension is not as specified, adjust it.

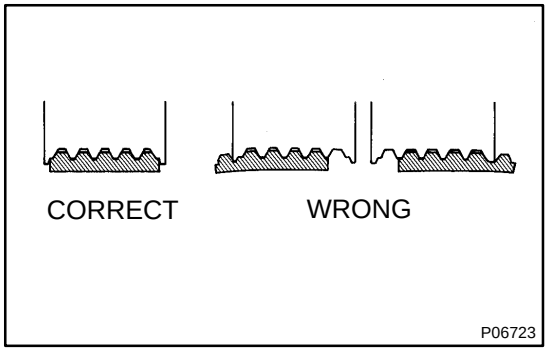

HINT:

- After installing a belt, check that it fits properly in the ribbed grooves.
- ”New belt” refers to a belt which has been used less than 5 minutes on a running engine.
- ”Used belt” refers to a belt which has been used on a running engine for 5 minutes or more.
- Check with your hand to confirm that the belt has not slipped out of the groove on the bottom of the pulley.
- After installing a new belt, run the engine for about 5 minutes and recheck the belt tension.

6. VISUALLY CHECK GENERATOR WIRING AND LISTEN FOR ABNORMAL NOISES

(a) Check that the wiring is in good condition.

(b) Check that there is no abnormal noise from the generator while the engine is running.

7. CHECK CHARGE WARNING LIGHT CIRCUIT

(a) Warm up the engine and then turn it off.

(b) Turn off all accessories.

(c) Turn the ignition switch ”ON”. Check that the charge warning light is lit.
(d) Start the engine. Check that the light goes off.

If the light does not go off as specified, troubleshoot the charge light circuit.

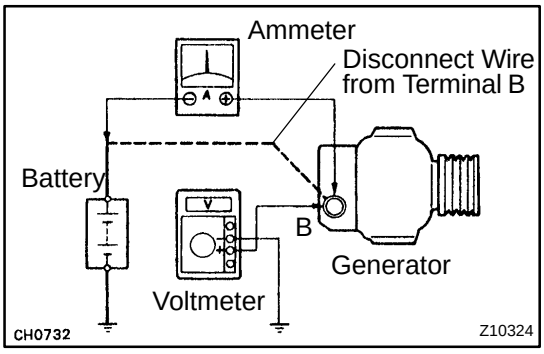

8. INSPECT CHARGING CIRCUIT WITHOUT LOAD

HINT:

If a battery/generator tester is available, connect the tester to the charging circuit as per the manufacturer’s instructions.

(a) If a tester is not available, connect a voltmeter and ammeter to the charging circuit as follows:
  (1) Disconnect the wire from terminal B of the generator and connect it to the negative (–) lead of the ammeter.
  (2) Connect the positive (+) lead of the ammeter to terminal B of the generator.
  (3) Connect the positive (+) lead of the voltmeter to terminal B of the generator.
  (4) Ground the negative (–) lead of the voltmeter.
(b) Check the charging circuit as follows:
  With the engine running from idle to 2,000 rpm, check the reading on the ammeter and voltmeter.
  Standard amperage: 10 A or less
  Standard voltage: 13.8 – 14.7 V at 25˚C (77˚F)

If the voltmeter reading is more than the standard voltage, replace the voltage regulator.

9. INSPECT CHARGING CIRCUIT WITH LOAD

(a) With the engine running at 2,000 rpm, turn on the high beam headlights and place the heater blower switch at ”HI”.
(b) Check the reading on the ammeter.
  Standard amperage: 30 A or more

If the ammeter reading is less than the standard amperage, repair the generator.

HINT:

If the battery is fully charged, the indication will sometimes be less than the standard amperage.

GENERATOR

COMPONENTS

CH00O–02

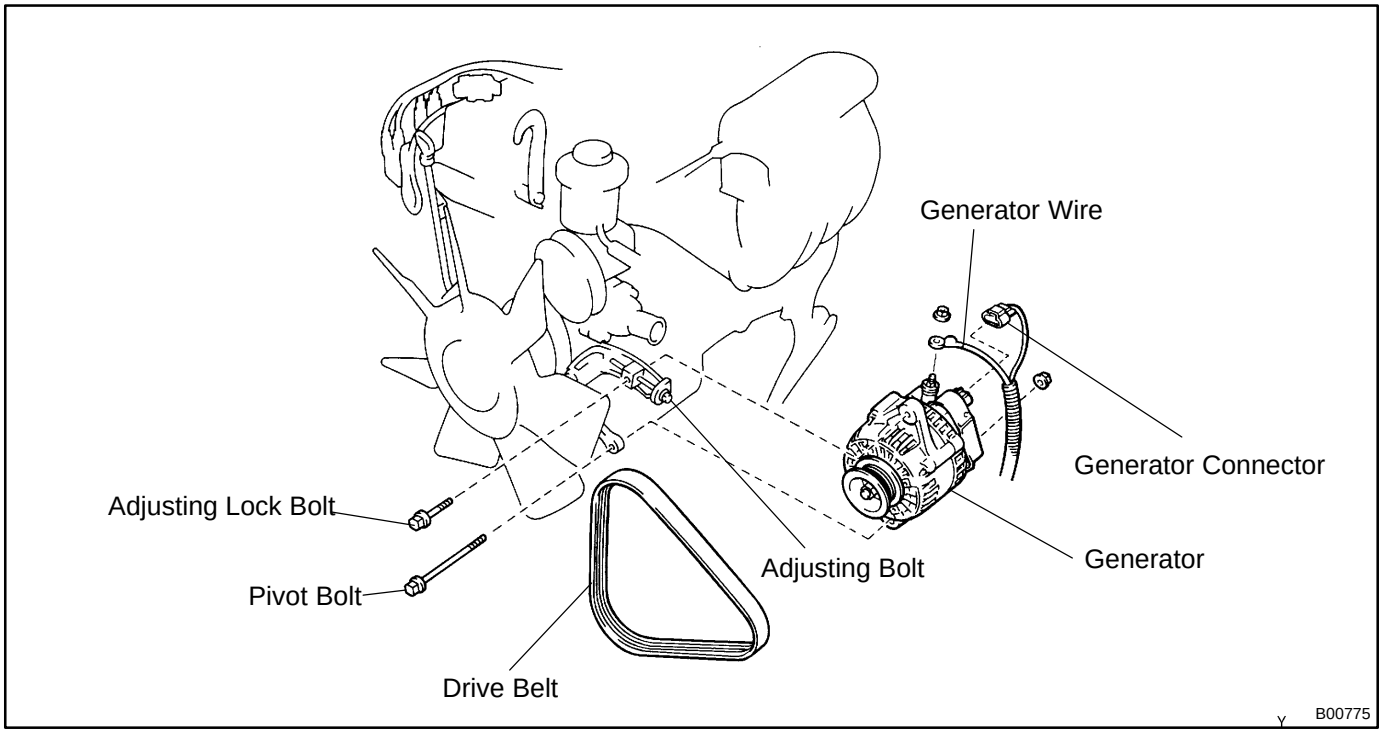

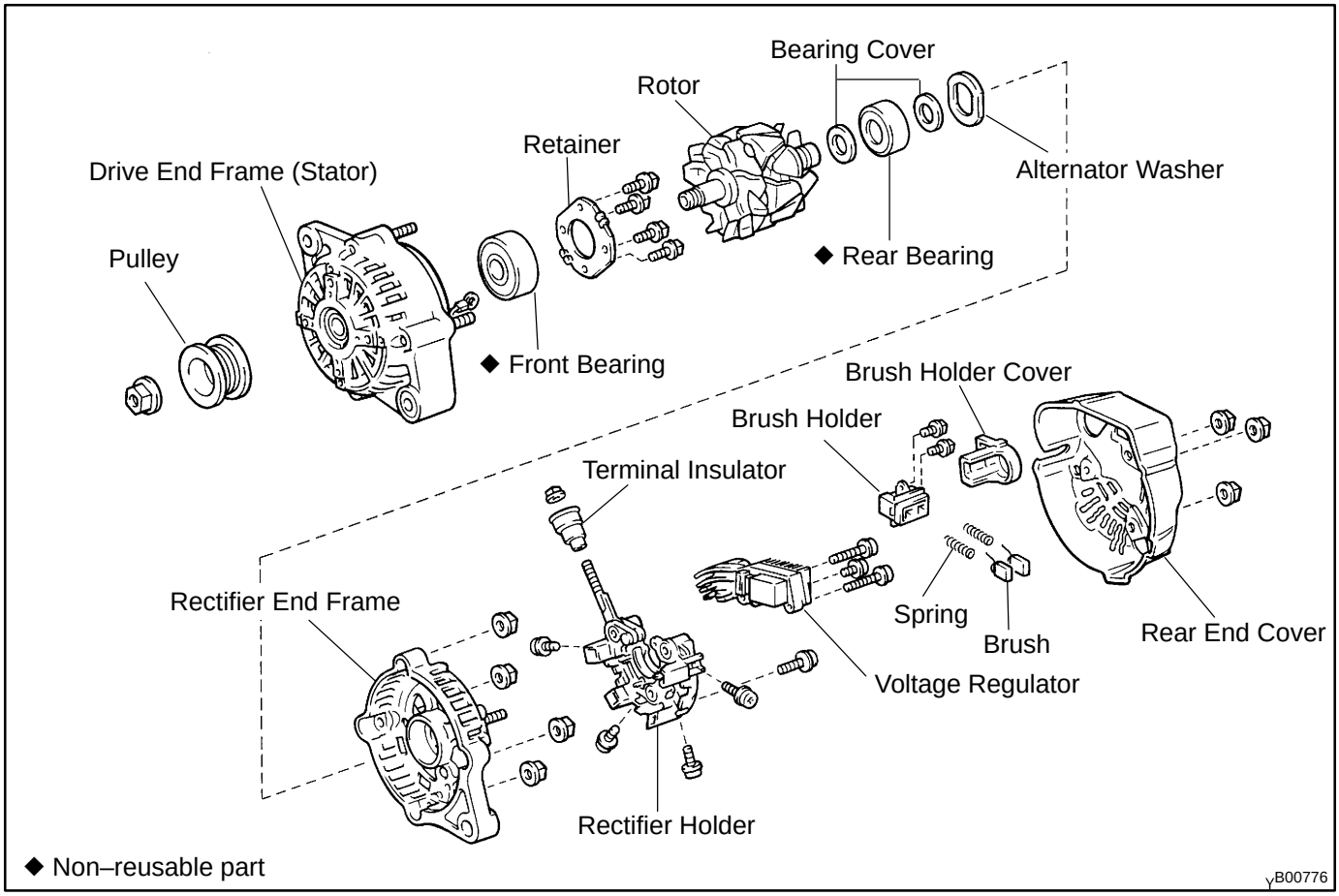

CH00Q–03

DISASSEMBLY

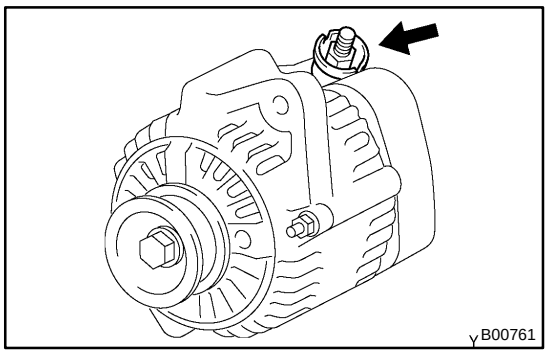

1. REMOVE REAR END COVER

(a) Remove the nut and terminal insulator.

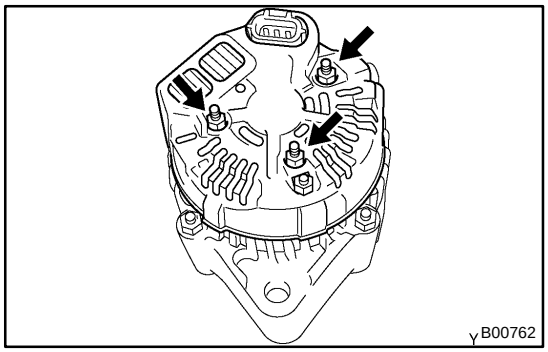

(b) Remove the 3 nuts, and end cover.

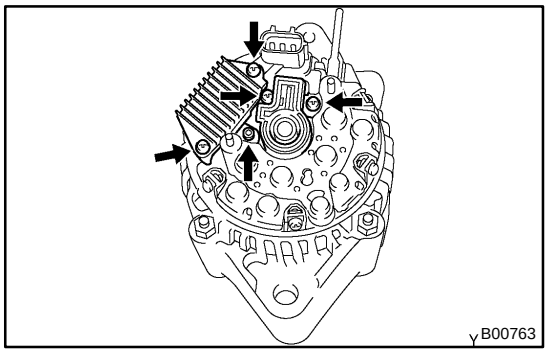

2. REMOVE BRUSH HOLDER AND VOLTAGE REGULATOR

Remove the 5 screws, bush holder and voltage regulator.

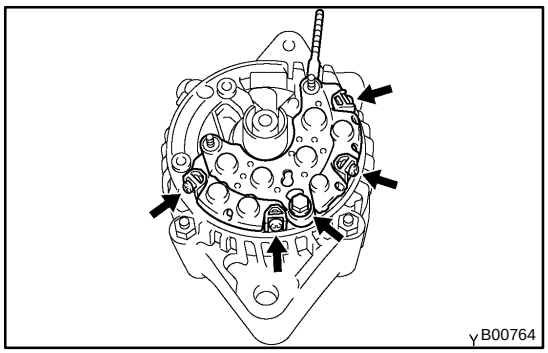

3. REMOVE RECTIFIER HOLDER

Remove the bolt, 4 screws and rectifier holder.

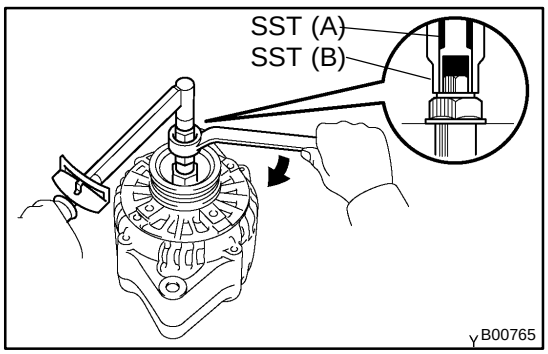

4. REMOVE PULLEY

(a) Hold SST (A) with a torque wrench, and tighten SST (B) clockwise to the specified torque.

SST 09820–63010

Torque: 39 N·m (400 kgf·cm, 29 ft·lbf)

(b) Check that SST (A) is secured to the rotor shaft.

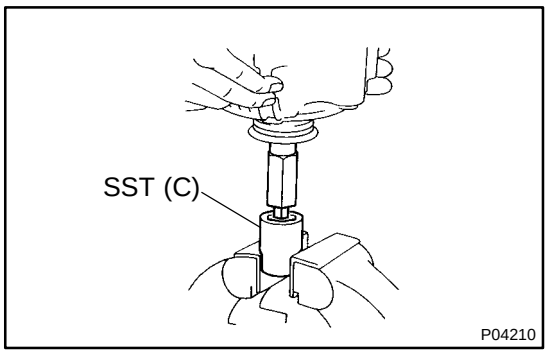

(c) Mount SST (C) in a vise.
(d) Install the generator to SST (C).

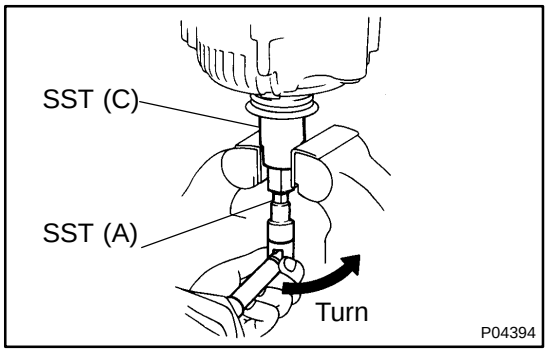

(e) To loosen the pulley nut, turn SST (A) in the direction shown in the illustration.

NOTICE:

To prevent damage to the rotor shaft, do not loosen the pulley nut more than one–half of a turn.

(f) Remove the generator from SST (C).

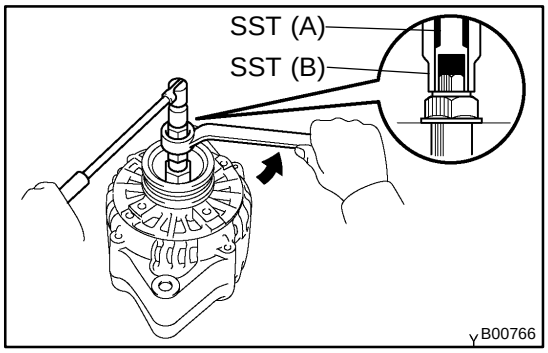

(g) Turn SST (B) and remove SST (A and B).
(h) Remove the pulley nut and pulley.

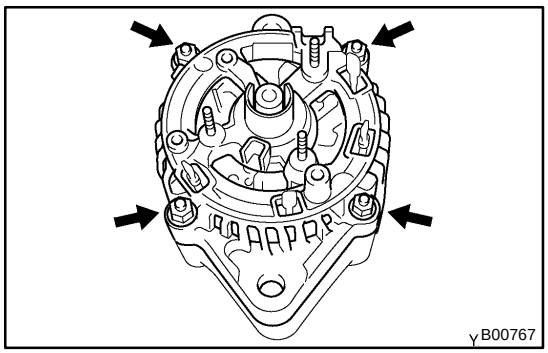

5. REMOVE RECTIFIER END FRAME

(a) Remove the 4 nuts.

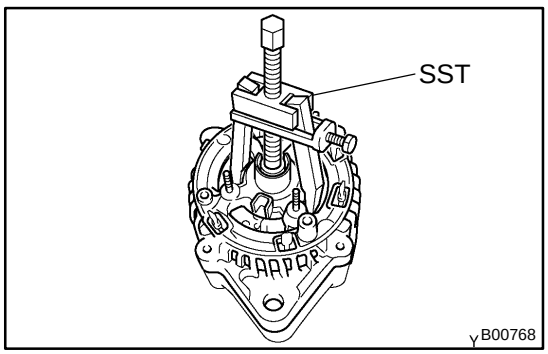

(b) Using SST, remove the rectifier end frame.
SST 09286–46011

6. REMOVE ROTOR FROM DRIVE END FRAME

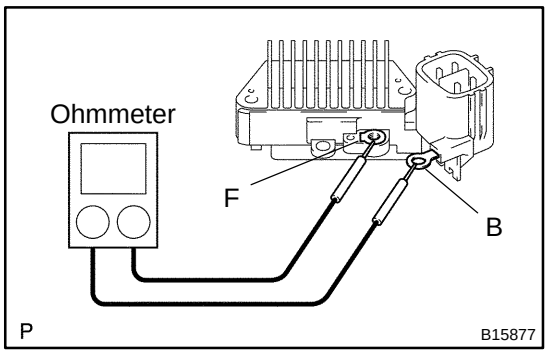

INSPECTION

1. INSPECT VOLTEGE REGULATOR

(a) Using an ohmmeter, check the continuity between terminals F and B.

Standard:

When the positive and negative poles between terminals F and B are exchanged, there is continuity in one way but no continuity in another way.

If the continuity is not as specified, replace the regulator.

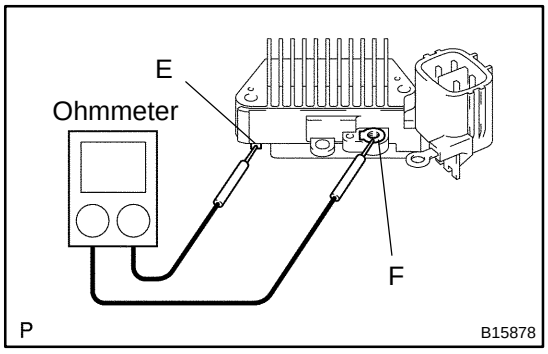

CH0L2–01

(b) Using an ohmmeter, check the continuity between terminals F and E.

Standard:

When the positive and negative poles between terminals F and E are exchanged, there is continuity in one way but no continuity in another way.

If the continuity is not as specified, replace the regulator.

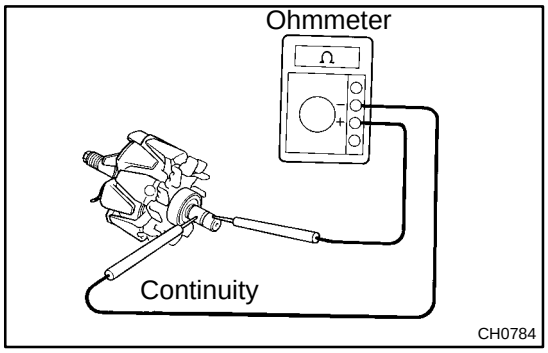

2. INSPECT ROTOR

(a) Check the rotor for open circuit.

Using an ohmmeter, check that there is continuity between the slip rings.

Standard resistance: 2.1 – 2.5 Ω at 20˚C (68˚F)

If there is no continuity, replace the rotor.

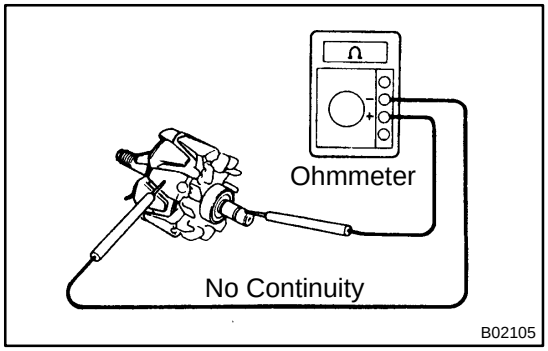

(b) Check the rotor for ground.

Using an ohmmeter, check that there is no continuity between the slip ring and rotor.

If there is continuity, replace the rotor.

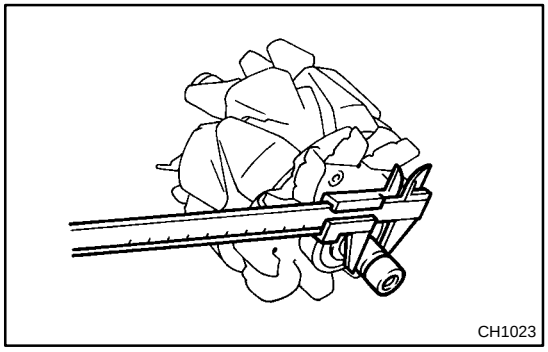

(c) Check that the slip rings are not rough or scored.

If rough or scored, replace the rotor.

(d) Using vernier calipers, measure the slip ring diameter.

Standard diameter: 14.2 – 14.4 mm (0.559 – 0.567 in.)

Minimum diameter: 12.8 mm (0.504 in.)

If the diameter is less than minimum, replace the rotor.

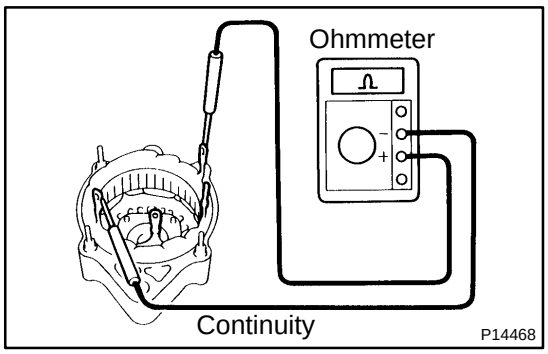

3. INSPECT STATOR (DRIVE END FRAME)

(a) Check the stator for open circuit.
Using an ohmmeter, check that there is continuity between the coil leads.

If there is no continuity, replace the drive end frame assembly.

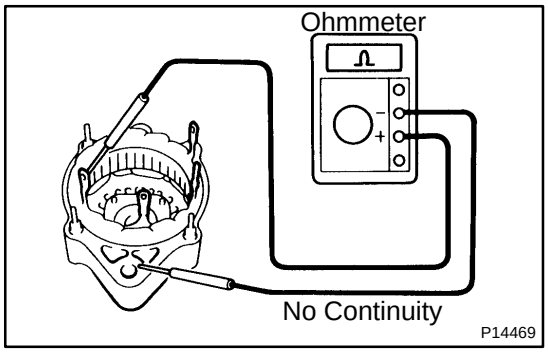

(b) Check the stator for ground.
Using an ohmmeter, check that there is no continuity between the coil lead and drive end frame.

If there is continuity, replace the drive end frame assembly.

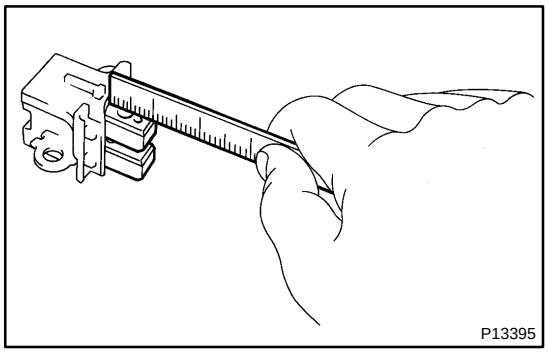

4. INSPECT BRUSHES

Using a scale, measure the exposed brush length.

Standard exposed length:
9.5 – 11.5 mm (0.374 – 0.453 in.)
Minimum exposed length: 1.5 mm (0.059 in.)

If the exposed length is less than minimum, replace the brushes (See page CH–11).

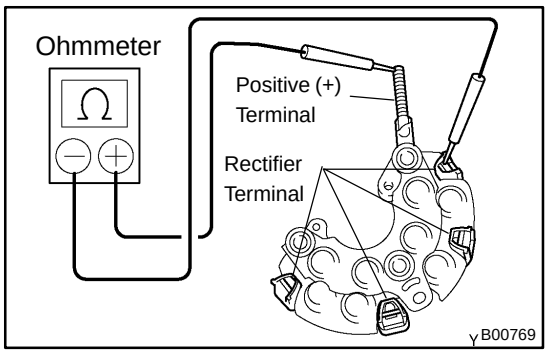

5. INSPECT RECTIFIERS (RECTIFIRE HOLDER)

(a) Check the positive (+) rectifire.
(1) Using an ohmmeter, connect one tester probe to the positive (+) terminal and the other to each rectifier terminal.
(2) Reverse the polarity of the tester probes and repeat step (a).
(3) Check that one shows continuity and the other shows no continuity.

If continuity is not as specified, replace the rectifier holder.

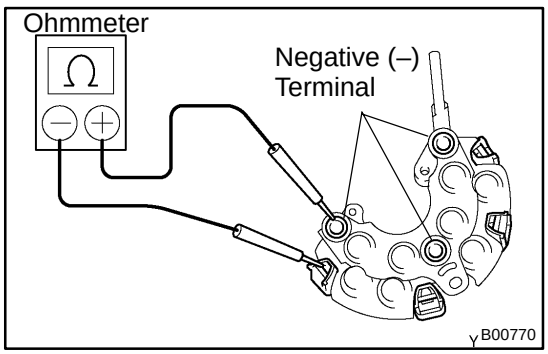

(b) Check the negative (–) rectifire.
(1) Using an ohmmeter, connect one tester probe to each negative (–) terminal and the other to each rectifier terminal.
(2) Reverse the polarity of the tester probes and repeat step (a).
(3) Check that one shows continuity and the other shows no continuity.

If continuity is not as specified, replace the rectifier holder.

6. INSPECT BEARING

Check the bearing is not rough or worn.

If necessary, replace the bearing (See page CH–11).

CH0CQ–02

INSTALLATION

Installation is in the reverse order of removal (See page CH–5).

CH0CP–02

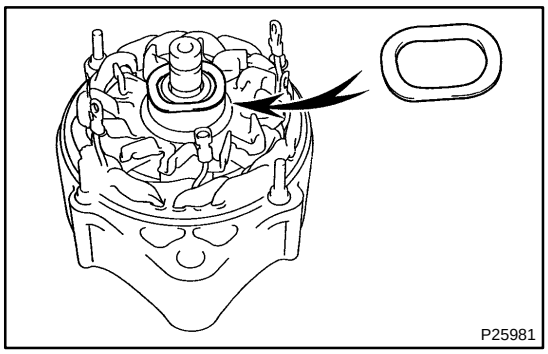

REASSEMBLY

1. PLACE DRIVE END FRAME ON PULLEY

2. INSTALL ROTOR TO DRIVE END FRAME

3. INSTALL RECTIFIER END FRAME

(a) Place the generator washer on the rotor.

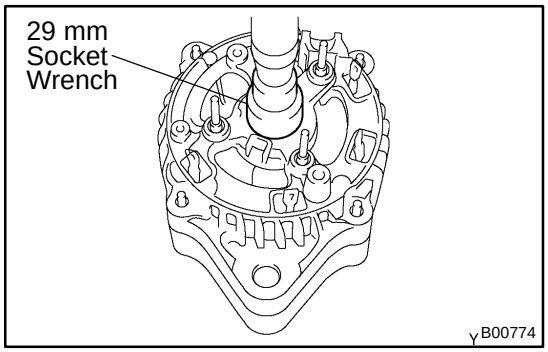

(b) Using a 29 mm socket wrench and press, slowly press in the rectifier end frame.

(c) Install the 4 nuts.
Torque: 4.5 N·m (46 kgf·cm, 40 in.·lbf)

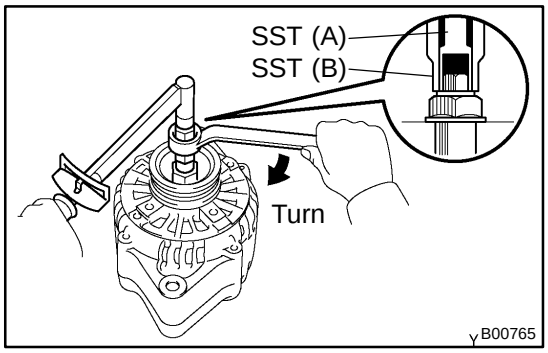

4. INSTALL PULLEY

(a) Install the pulley to the rotor shaft by tightening the pulley nut by hand.

(b) Hold SST (A) with a torque wrench, and tighten SST (B) clockwise to the specified torque.
SST 09820–63010
Torque: 39 N·m (400 kgf·cm, 29 ft·lbf)

(c) Check that SST (A) is secured to the pulley shaft.

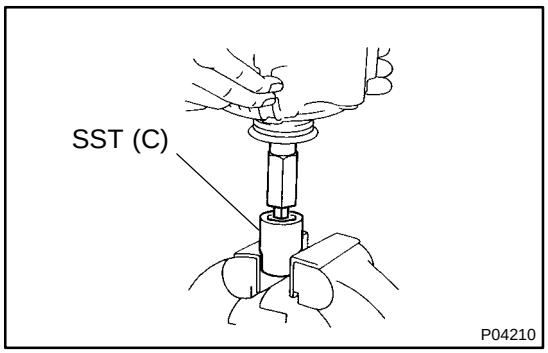

(d) Mount SST (C) in a vise.

(e) Install the generator to SST (C).

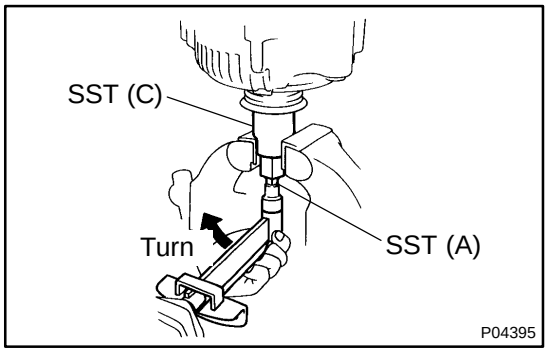

(f) To torque the pulley nut, turn SST (A) in the direction shown in the illustration.
Torque: 110 N·m (1,125 kgf·cm, 81 ft·lbf)

(g) Remove the generator from SST (C).

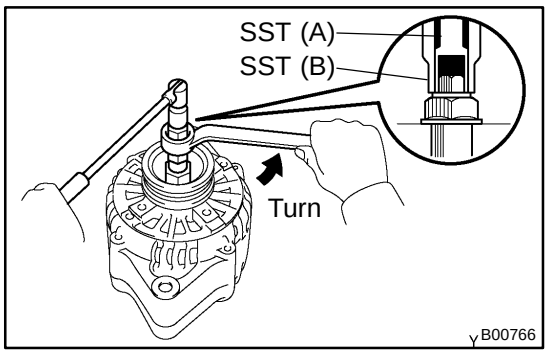

(h) Turn SST (B), and remove SST (A and B).

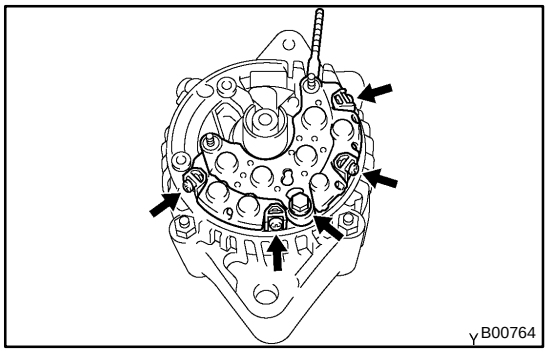

5. INSTALL RECTIFIER HOLDER

Install the rectifier holder with the bolt and 4 screws.

Torque:
1.96 N·m (20 kgf·cm, 17.4 in.·lbf) for screw
3.9 N·m (40 kgf·cm, 34.7 in.·lbf) for bolt

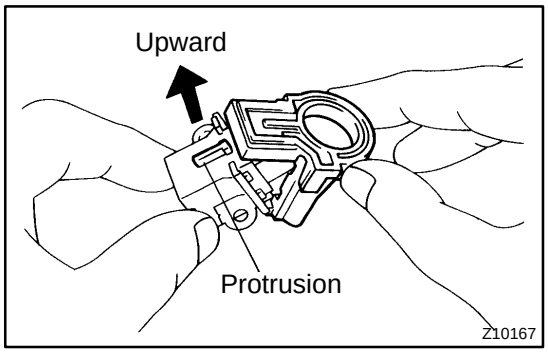

6. INSTALL VOLTAGE REGULATOR AND BRUSH HOLDER

(a) Install the brush holder cover to the brush holder.

NOTICE:

Be careful of the holder installation direction.

(b) Place the voltage regulator together with the brush holder horizontally on the rectifier end frame.

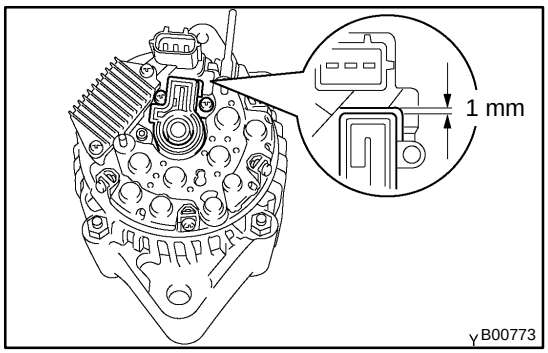

(c) Install the 5 screws until there is a clearance of approx. 1 mm (0.04 in.) between the brush holder and connector.
Torque: 1.96 N·m (20 kgf·cm, 17.4 in.·lbf)

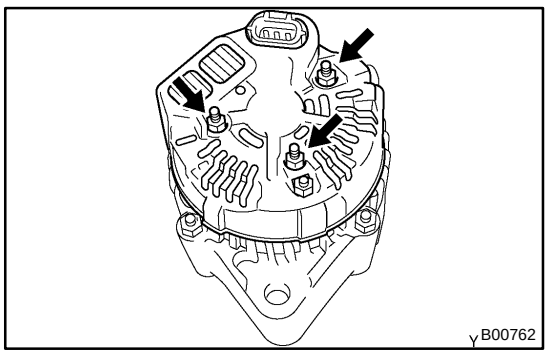

7. INSTALL REAR END COVER

(a) Install the end cover with the 3 nuts.
Torque: 4.5 N·m (46 kgf·cm, 40 in.·lbf)

(b) Install the terminal insulator with the nut.
Torque: 4.1 N·m (42 kgf·cm, 36 in.·lbf)

8. CHECK THAT ROTOR ROTATES SMOOTHLY

CH0CM–01

REMOVAL

1. DISCONNECT GENERATOR CONNECTOR AND WIRE

(a) Disconnect the generator connector.

(b) Remove the nut, and disconnect the generator wire.
Torque: 9.8 N·m (100 kgf·cm, 7.2 ft·lbf)

(c) Disconnect the wire harness with the clip.

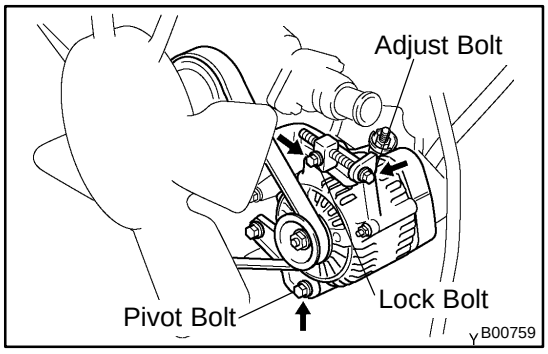

2. REMOVE GENERATOR DRIVE BELT

(a) Loosen the adjusting lock bolt and pivot bolt.

(b) Loosen the adjusting bolt, and remove the drive belt.

3. REMOVE GENERATOR

(a) Remove the pivot bolt and adjusting lock bolt.
Torque:
59 N·m (600 kgf·cm, 43 ft·lbf) for pivot bolt
29 N·m (300 kgf·cm, 21 ft·lbf) for adjusting lock bolt

(b) Remove the generator.

CH0CO–04

REPLACEMENT

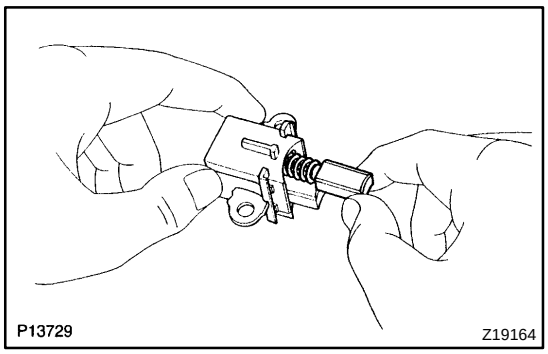

1. REPLACE BRUSHES

(a) Unsolder and remove the brush and spring.

(b) Run the wire of a new brush through the spring and the hole in the brush holder, and insert the spring and brush into the brush holder.

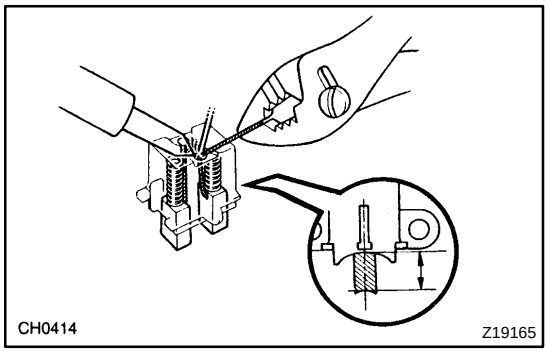

(c) Solder the brush wire to the brush holder at the specified exposed length.
Exposed length: 9.5 – 11.5 mm (0.374 – 0.453 in.)

(d) Check that the brush moves smoothly in the brush holder.

(e) Cut off the excess wire.

(f) Apply insulation paint to the soldered area.

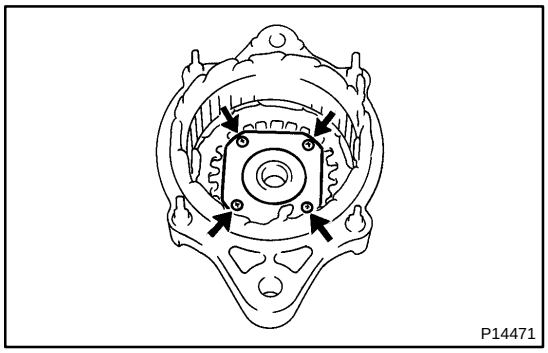

2. REPLACE FRONT BEARING

(a) Remove the 4 screws, bearing retainer and bearing.

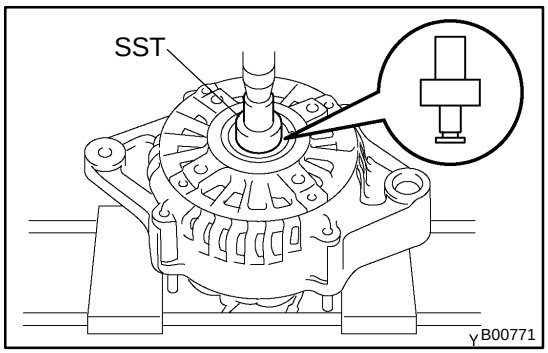

(b) Using SST and a press, press out the bearing.
SST 09950–60010 (09951–00260, 09952–06010)

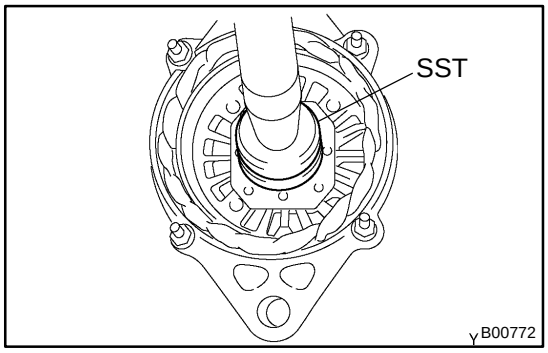

(c) Using SST and a press, press in a new bearing.
SST 09950–60010 (09951–00500)

(d) Install the bearing retainer with the 4 screws.
Torque: 2.6 N·m (26.5 kgf·cm, 23 in.·lbf)

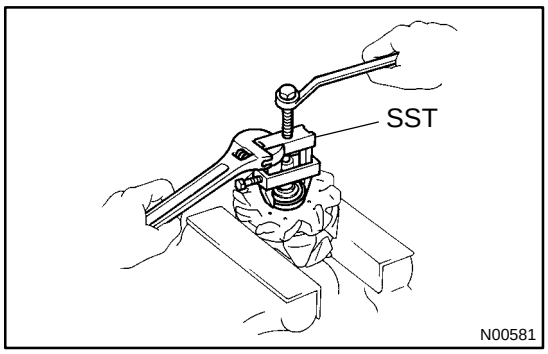

3. REPLACE REAR BEARING

(a) Using SST, remove the bearing cover (outside) and bearing.
SST 09820–00021

NOTICE:
Be careful not to damage the fan.

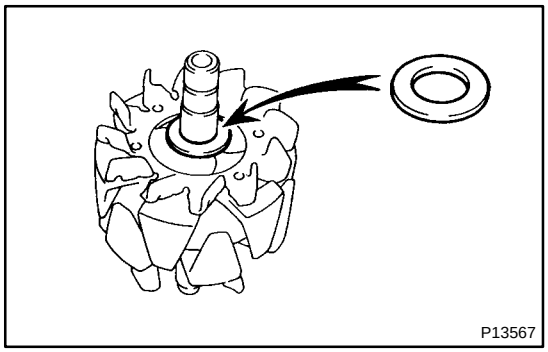

(b) Remove the bearing cover (inside).

(c) Place the bearing cover (inside) on the rotor.

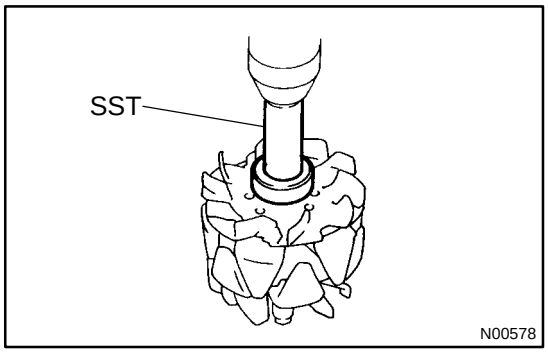

(d) Using SST and a press, press in a new bearing.
SST 09820–00030

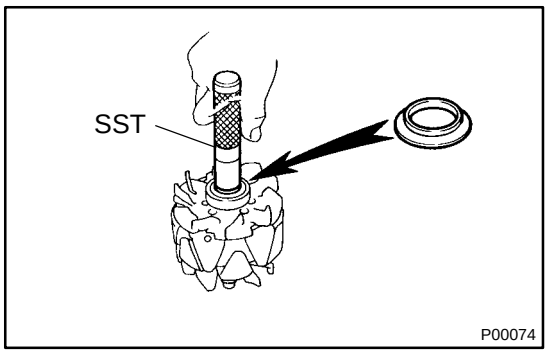

(e) Using SST, push in the bearing cover (outside).
SST 09285–76010

CHARGING SYSTEM

CH0L3–01

ON–VEHICLE INSPECTION

CAUTION:

- **Check that the battery cables are connected to the correct terminals.**
- **Disconnect the battery cables when the battery is given a quick charge.**
- **Do not perform tests with a high voltage insulation resistance tester.**
- **Never disconnect the battery while the engine is running.**

1. CHECK BATTERY ELECTROLYTE LEVEL

Check the electrolyte quantity of each cell.

Maintenance–Free Battery:

If under the lower level, replace the battery (or add distilled water if possible) and check the charging system.

Except Maintenance–Free Battery:

If under the lower level, add distilled water.

Except Maintenance–Free Battery

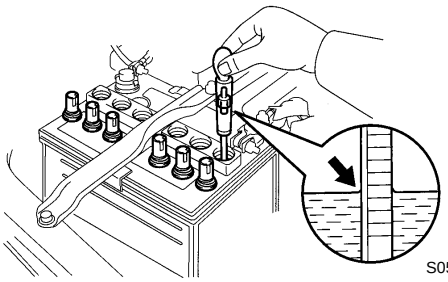

S05376

2. Except Maintenance–Battery: CHECK BATTERY SPECIFIC GRAVITY

Check the specific gravity of each cell.

Standard specific gravity: 1.25 – 1.29 at 20˚C (68˚F)

If the specific gravity is less than specification, charge the battery.

Maintenance–Free Battery

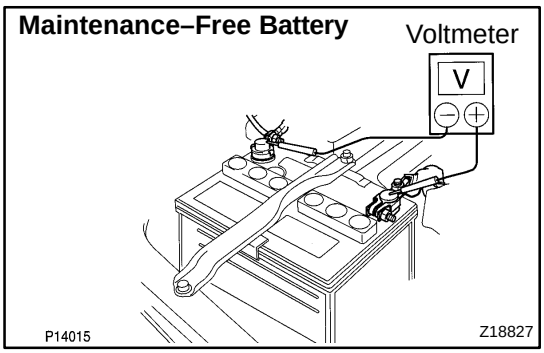

P14015 Z18827

3. Maintenance–Free Battery: CHECK BATTERY VOLTAGE

(a) After having driven the vehicle and in the case that 20 minutes have not passed after having stopped the engine, turn the ignition switch ON and turn on the electrical system (headlight, blower motor, rear defogger etc.) for 60 seconds to remove the surface charge.

(b) Turn the ignition switch OFF and turn off the electrical systems.

(c) Measure the battery voltage between the negative (–) and positive (+) terminals of the battery.

Standard voltage: 12.5 – 12.9 V at 20˚C (68˚F)

If the voltage is less than specification, charge the battery.

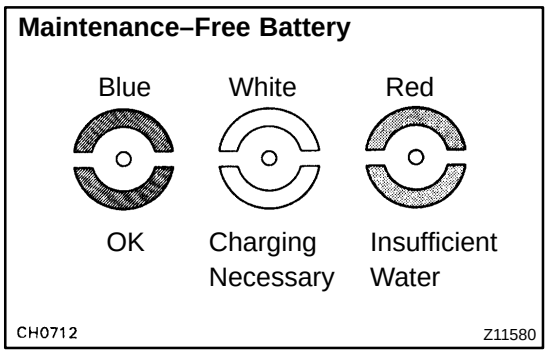

HINT:
Check the indicator as shown in the illustration.

4. CHECK BATTERY TERMINALS, FUSIBLE LINK AND FUSES

(a) Check that the battery terminals are not loose or corroded.

If the terminals are corroded, clean the terminals.

(b) Check the H–fuses, M–fuse and fuses for continuity.

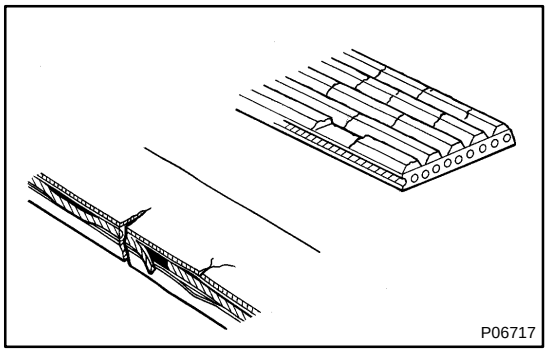

5. INSPECT DRIVE BELT

(a) Visually check the belt for excessive wear, frayed cords etc.

HINT:
Cracks on the ribbed side of the belt are considered acceptable. If the belt has chunks missing from the ribs, it should be replaced.

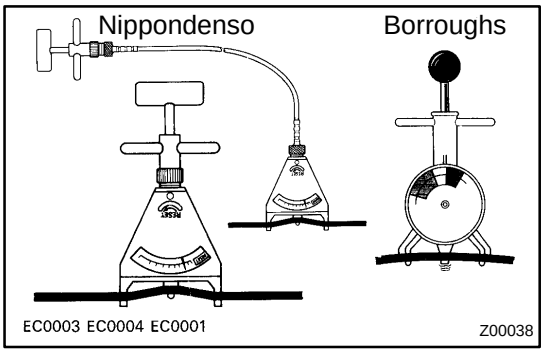

(b) Using a belt tension gauge, check the drive belt tension.
Belt tension gauge:
DENSO BTG–20 (95506–00020)
Borroughs No. BT–33–73F
Drive belt tension:

New belt	160 ± 20 lbf
Used belt	100 ± 20 lbf

If necessary, adjust the drive belt tension.

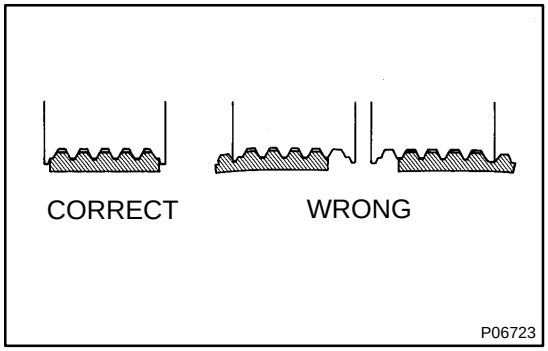

HINT:

- After installing the drive belt, check that it fits properly in the ribbed grooves. Check with your hand to confirm that the belt has not slipped out of the groove on the bottom of the crank pulley.
- ”New belt” refers to a belt which has been used less than 5 minutes on a running engine.
- ”Used belt” refers to a belt which has been used on a running engine for 5 minutes or more.
- After installing a new belt, run the engine for approx. 5 minutes and then recheck the tension.

6. VISUALLY CHECK GENERATOR WIRING AND LISTEN FOR ABNORMAL NOISES

(a) Check that the wiring is in good condition.

(b) Check that there is no abnormal noise from the generator while the engine is running.

7. CHECK CHARGE WARNING LIGHT CIRCUIT

(a) Warm up the engine and then turn it off.

(b) Turn off all accessories.

(c) Turn the ignition switch ”ON”. Check that the charge warning light is lit.
(d) Start the engine. Check that the light goes off.

If the light does not go off as specified, troubleshoot the charge light circuit.

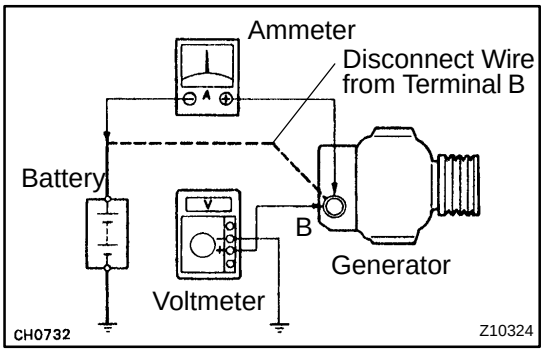

8. CHECK CHARGING CIRCUIT WITHOUT LOAD

HINT:

If a battery/generator tester is available, connect the tester to the charging circuit according to the manufactuer’s instructions.

(a) If a tester is not available, connect a voltmeter and ammeter to the charging circuit as follows:
  (1) Disconnect the wire from terminal B of the generator and connect the wire to the negative (–) terminal of the ammeter.
  (2) Connect the test lead from the positive (+) terminal of the ammeter to terminal B of the generator.
  (3) Connect the positive (+) lead of the voltmeter to terminal B of the generator.
  (4) Ground the negative (–) lead of the voltmeter.
(b) Check the charging circuit as follows:
  With the engine running from idling to 2,000 rpm, check the reading on the ammeter and voltmeter.
  Standard amperage: 10 A or less
  Standard voltage: 13.2 – 14.7 V

If the voltage reading is greater than the standard voltage, replace the voltage regulator.

9. INSPECT CHARGING CIRCUIT WITH LOAD

(a) With the engine running at 2,000 rpm, turn on the high beam headlights and place the heater fan control switch to HI.
(b) Check the reading on the ammeter.
  Standard amperage: 30 A or more

If the ammeter reading is less than 30 A, repair the generator.

HINT:

If the battery is fully charged, the indication will sometimes be less than 30 A.

GENERATOR

COMPONENTS

CH00X–03

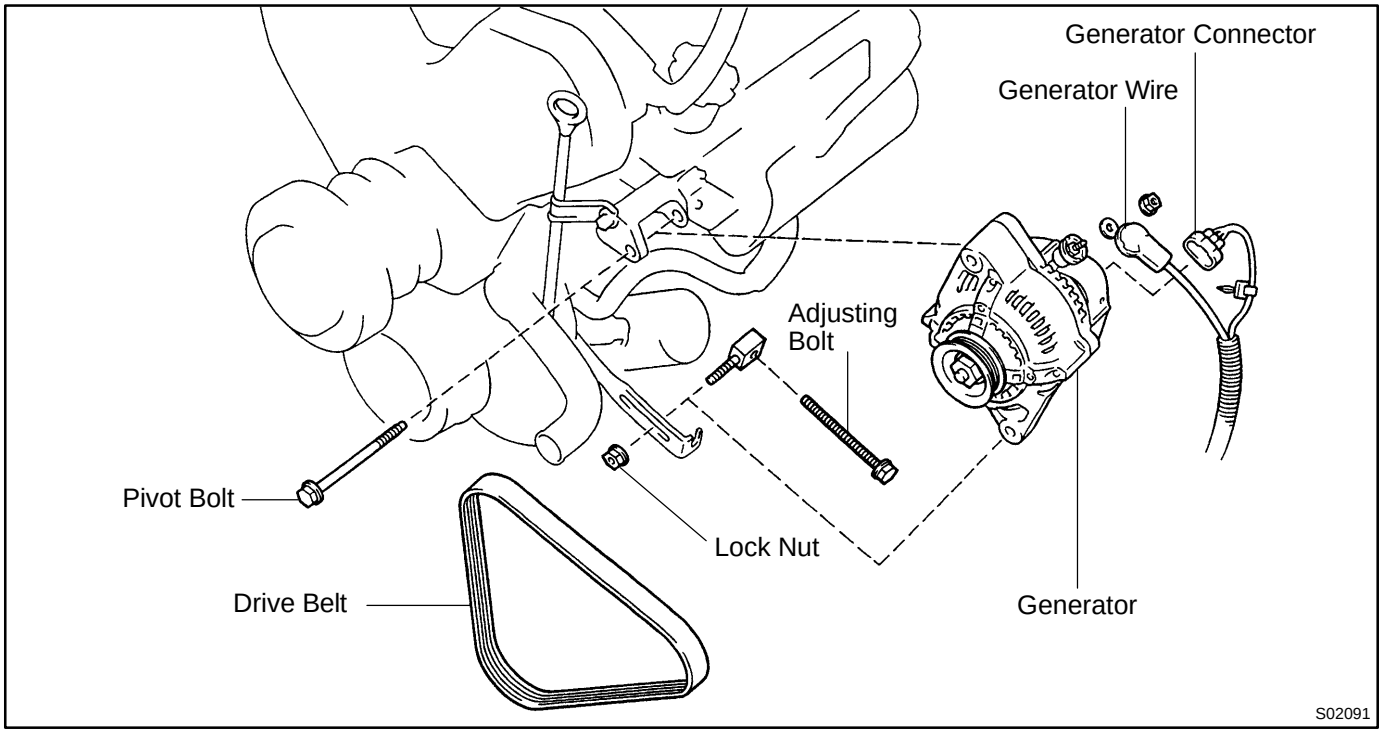

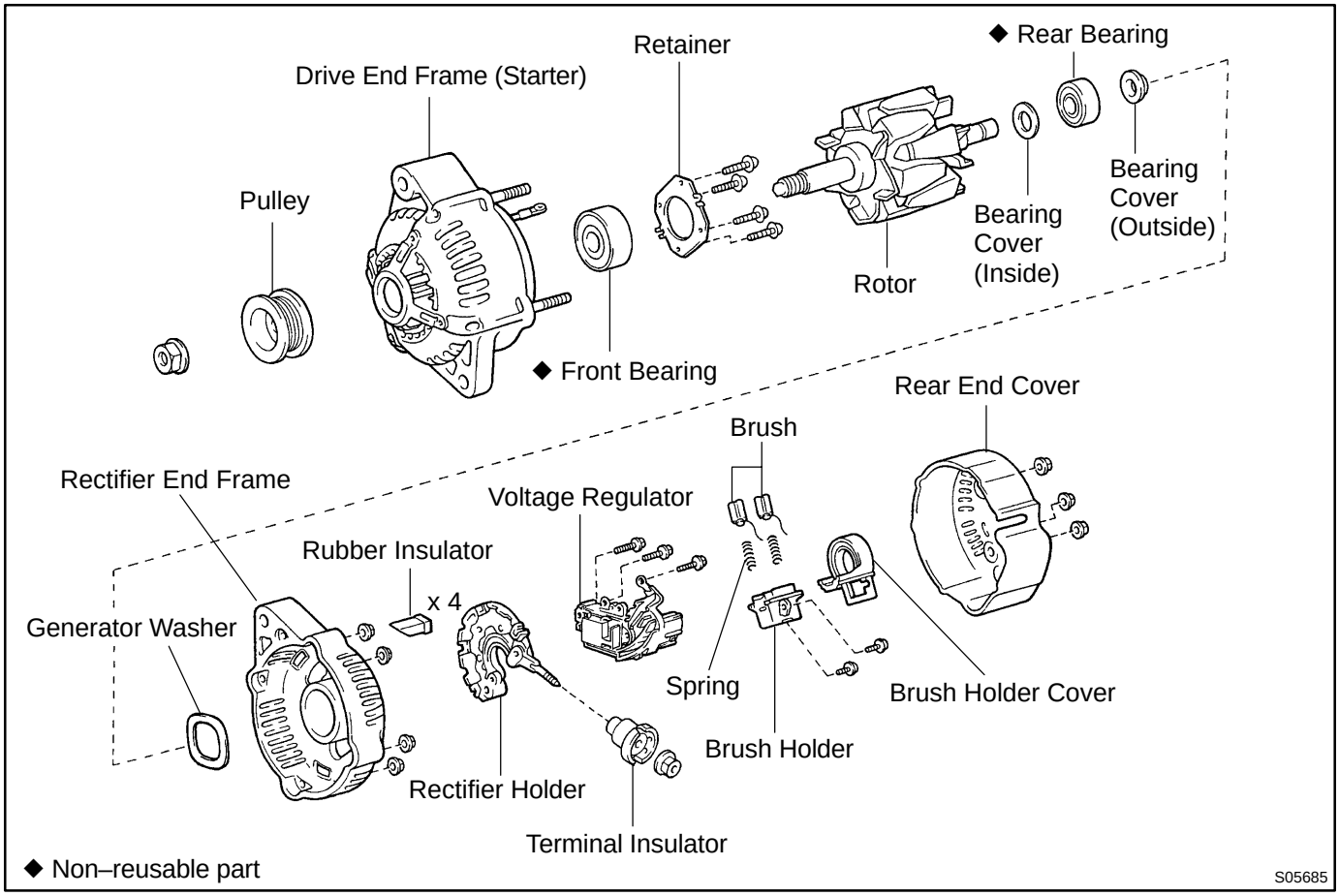

CH0CG–02

DISASSEMBLY

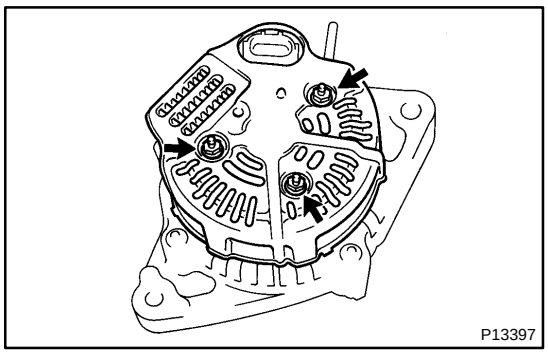

1. REMOVE REAR END COVER

(a) Remove the nut and terminal insulator.

(b) Remove the 3 nuts and end cover.

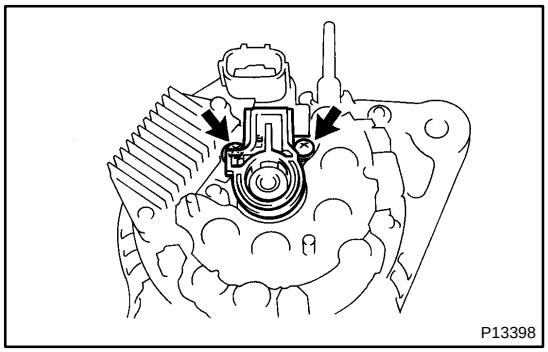

2. REMOVE BRUSH HOLDER

(a) Remove the 2 screws, brush holder and cover.

(b) Remove the brush holder cover from the brush holder.

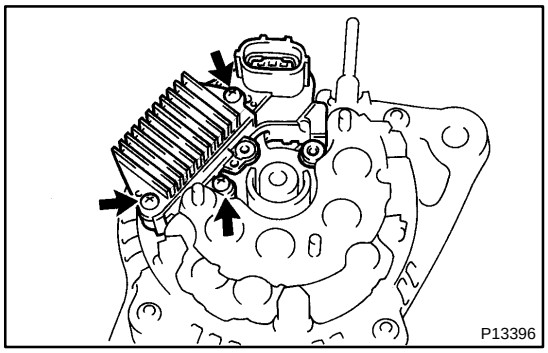

3. REMOVE VOLTAGE REGULATOR

Remove the 3 screws and voltage regulator.

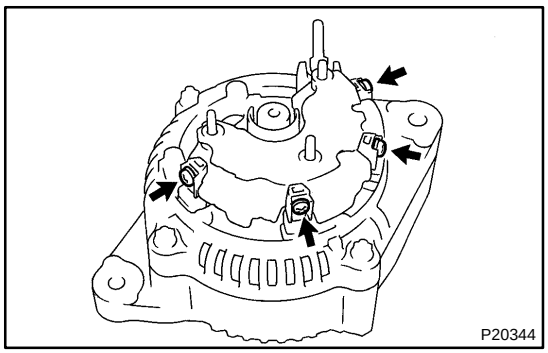

4. REMOVE RECTIFIER HOLDER

(a) Remove the 4 screws and rectifier holder.

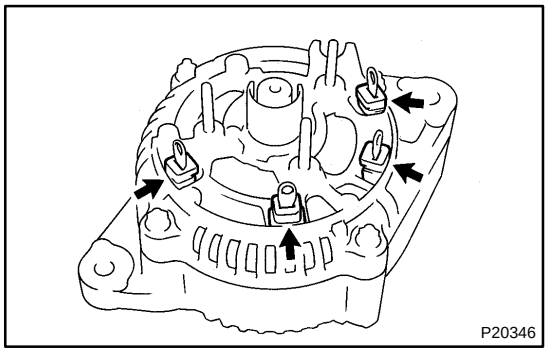

(b) Remove the 4 rubber insulators.

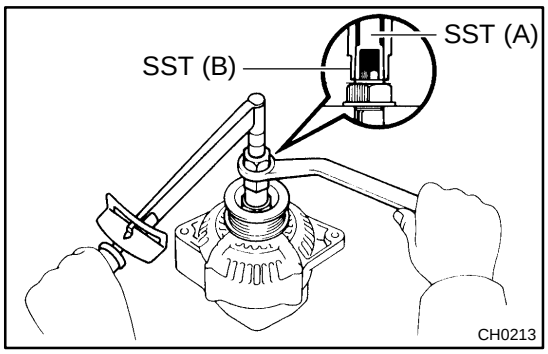

5. REMOVE PULLEY

(a) Hold SST (A) with a torque wrench, and tighten SST (B) clockwise to the specified torque.
SST 09820–63011
Torque:39 N·m (400 kgf·cm, 29 ft·lbf)

(b) Check that SST (A) is secured to the rotor shaft.

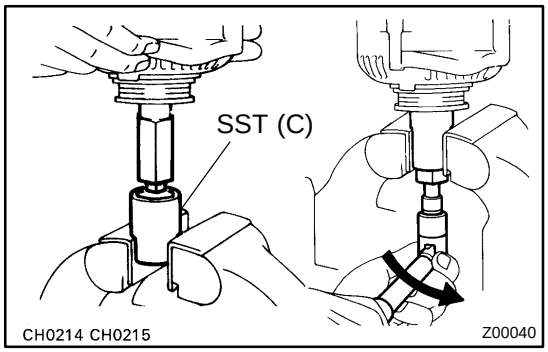

(c) As shown in the illustration, mount SST (C) in a vise, and install the generator with SST (A) and (B) to SST (C).

(d) To loosen the pulley nut, turn SST (A) in the direction shown in the illustration.

NOTICE:

To prevent damage to the rotor shaft, do not loosen the pulley nut more than one–half of a turn.

(e) Remove the generator with SST (A) and (B) from SST (C).

(f) Turn SST (B) and remove SST (A) and (B).

(g) Remove the pulley nut and pulley.

6. REMOVE RECTIFIER END FRAME

(a) Remove the 4 nuts.

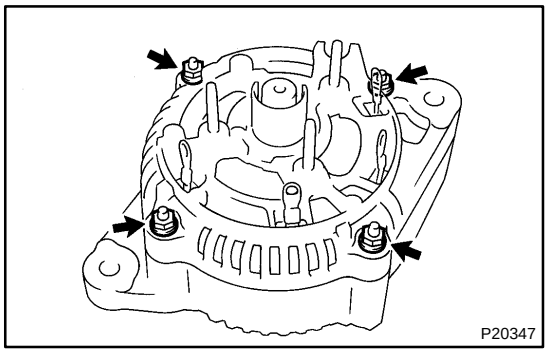

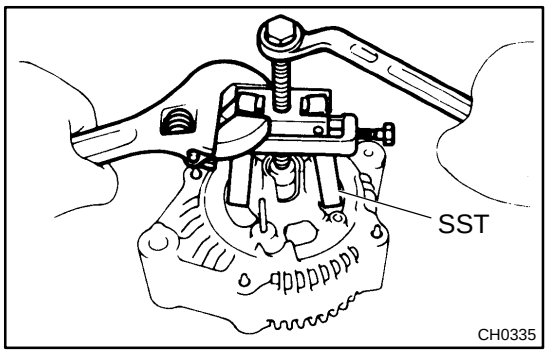

(b) Using SST, remove the rectifier end frame.
SST 09286–46011

(c) Using snap ring pliers, remove the generator washer from the rectifier end frame.

7. REMOVE ROTOR FROM DRIVE END FRAME

CH0L4–01

INSPECTION

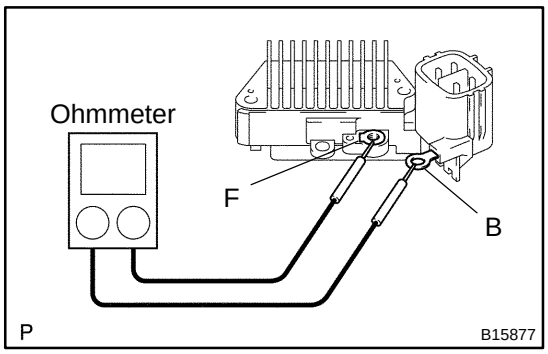

1. INSPECT VOLTEGE REGULATOR

(a) Using an ohmmeter, check the continuity between terminals F and B.

Standard:

When the positive and negative poles between terminals F and B are exchanged, there is continuity in one way but no continuity in another way.

If the continuity is not as specified, replace the regulator.

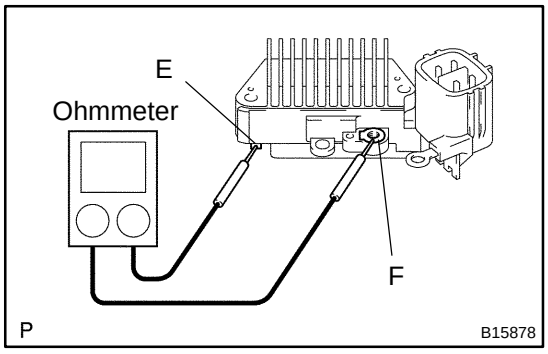

(b) Using an ohmmeter, check the continuity between terminals F and E.

Standard:

When the positive and negative poles between terminals F and E are exchanged, there is continuity in one way but no continuity in another way.

If the continuity is not as specified, replace the regulator.

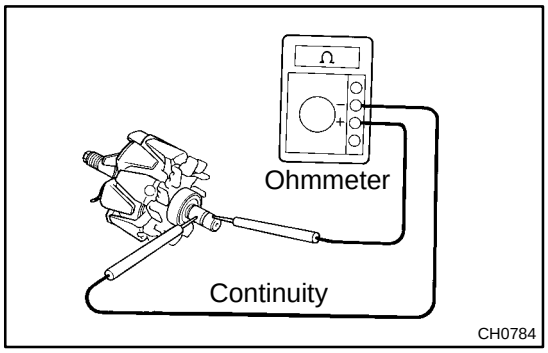

2. INSPECT ROTOR

(a) Check the rotor for open circuit.

Using an ohmmeter, check that there is continuity between the slip rings.

Standard resistance: 2.1 – 2.5 Ω at 20˚C (68˚F)

If there is no continuity, replace the rotor.

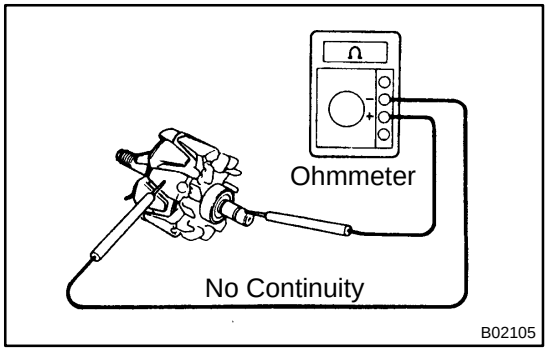

(b) Check the rotor for ground.

Using an ohmmeter, check that there is no continuity between the slip ring and rotor.

If there is continuity, replace the rotor.

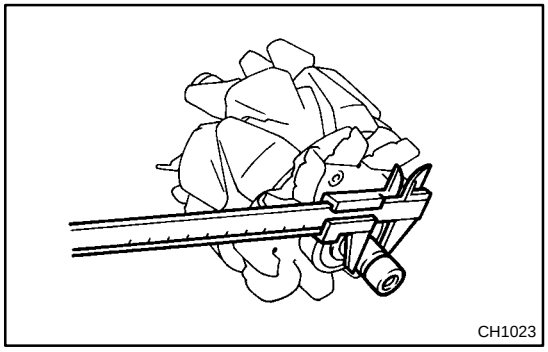

(c) Check that the slip rings are not rough or scored.

If rough or scored, replace the rotor.

(d) Using vernier calipers, measure the slip ring diameter.

Standard diameter: 14.2 – 14.4 mm (0.559 – 0.567 in.)

Minimum diameter: 12.8 mm (0.504 in.)

If the diameter is less than minimum, replace the rotor.

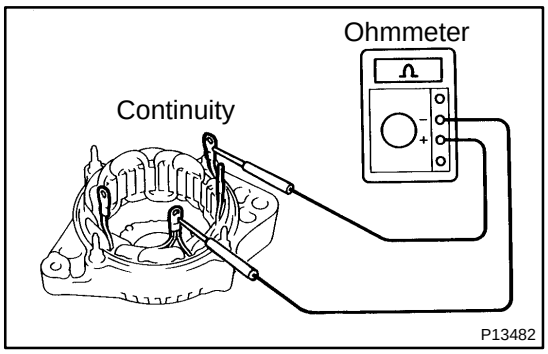

3. INSPECT STATOR (DRIVE END FRAME)

(a) Check the stator for open circuit.
Using an ohmmeter, check that there is continuity between the coil leads.

If there is no continuity, replace the drive end frame assembly.

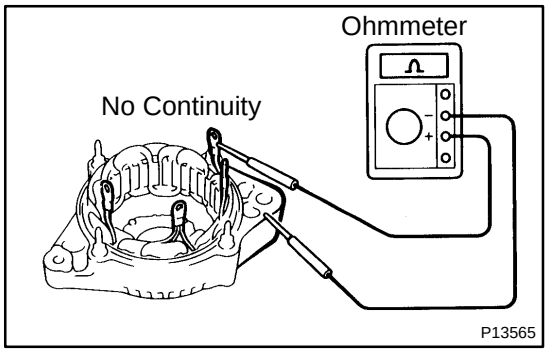

(b) Check the stator for ground.
Using an ohmmeter, check that there is no continuity between the coil lead and drive end frame.

If there is continuity, replace the drive end frame assembly.

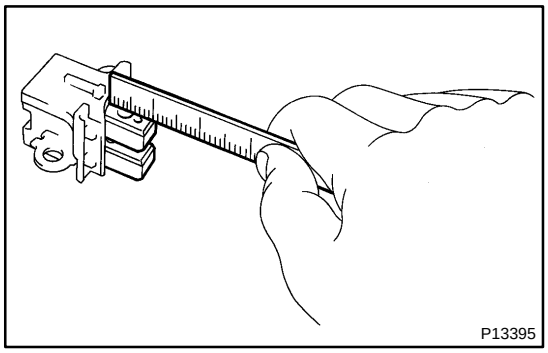

4. INSPECT BRUSHES

Using a scale, measure the exposed brush length.

Standard exposed length:
9.5 – 11.5 mm (0.374 – 0.453 in.)
Minimum exposed length: 1.5 mm (0.059 in.)

If the exposed length is less than minimum, replace the brushes (See page CH–11).

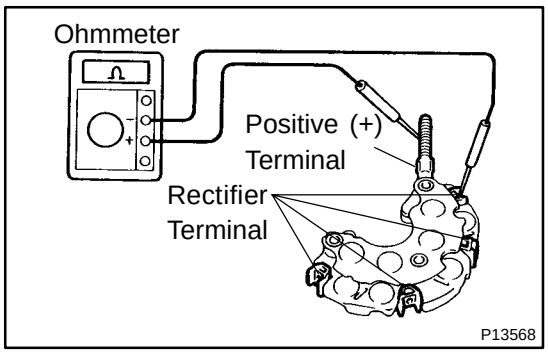

5. INSPECT RECTIFIERS (RECTIFIRE HOLDER)

(a) Check the positive (+) rectifire.
(1) Using an ohmmeter, connect one tester probe to the positive (+) terminal and the other to each rectifier terminal.
(2) Reverse the polarity of the tester probes and repeat step (a).
(3) Check that one shows continuity and the other shows no continuity.

If continuity is not as specified, replace the rectifier holder.

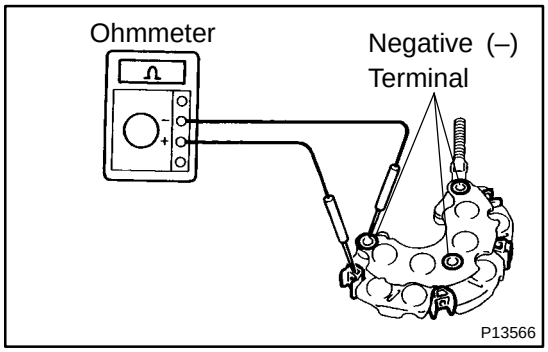

(b) Check the negative (–) rectifire.
(1) Using an ohmmeter, connect one tester probe to each negative (–) terminal and the other to each rectifier terminal.
(2) Reverse the polarity of the tester probes and repeat step (a).
(3) Check that one shows continuity and the other shows no continuity.

If continuity is not as specified, replace the rectifier holder.

6. INSPECT BEARING

Check the bearing is not rough or worn.

If necessary, replace the bearing (See page CH–11).

CH0CK–02

INSTALLATION

Installation is in the reverse order of removal (See page CH–5).

CH0CJ–02

REASSEMBLY

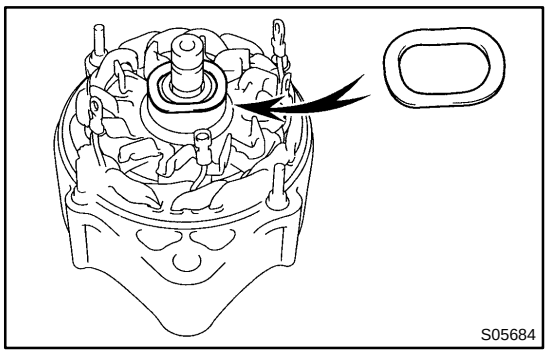

1. INSTALL ROTOR TO DRIVE END FRAME

(a) Place the rectifier end frame on the pulley.

(b) Install the rotor to the rectifier end frame.

2. INSTALL RECTIFIER END FRAME

(a) Place the generator washer on the rotor.

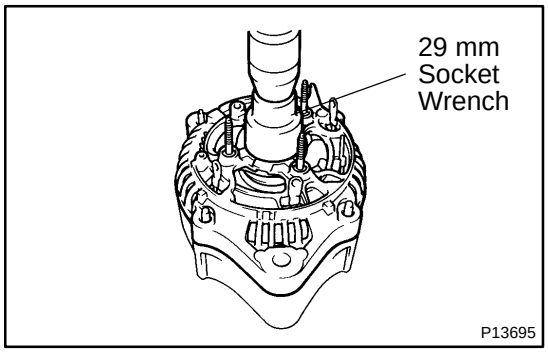

(b) Using a 29 mm socket wrench and press, slowly press in the rectifier end frame.

(c) Install the 4 nuts.

Torque: 4.5 N·m (45 kgf·cm, 39 in.·lbf)

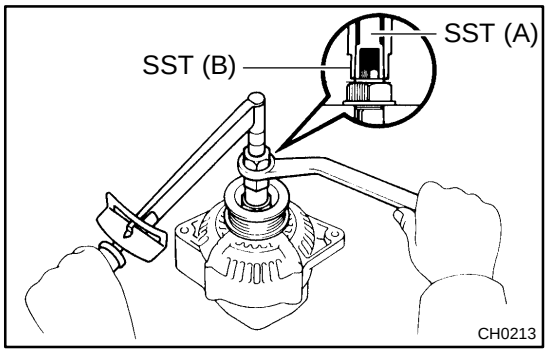

3. INSTALL PULLEY

(a) Install the pulley to the rotor shaft by tightening the pulley nut by hand.

(b) Hold SST (A) with a torque wrench, and tighten SST (B) clockwise to the specified torque.

SST 09820–63011

Torque: 39 N·m (400 kgf·cm, 29 ft·lbf)

(c) Check that SST (A) is secured to the pulley shaft.

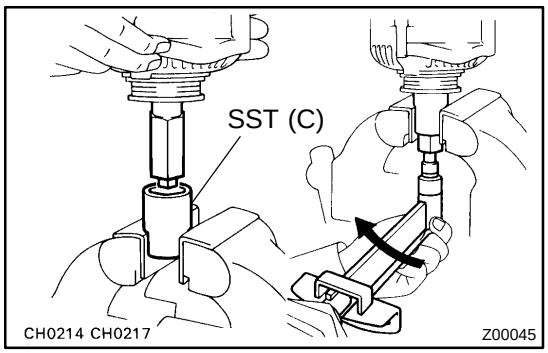

(d) As shown in the illustration, mount SST (C) in a vise, and install the generator with SST (A) and (B) to SST (C).

(e) To torque the pulley nut, turn SST (A) in the direction shown in the illustration.

Torque: 110 N·m (1,125 kgf·cm, 81 ft·lbf)

(f) Remove the generator with SST (A) and (B) from SST (C).

(g) Turn SST (B) and remove SST (A) and (B).

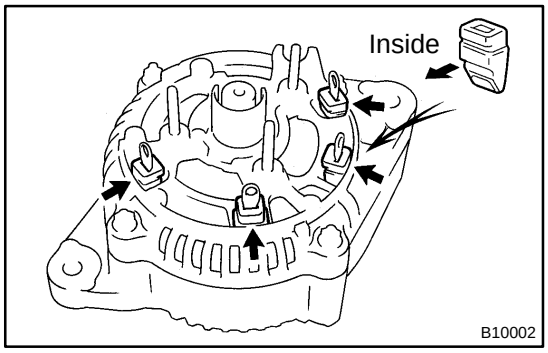

4. INSTALL RECTIFIER HOLDER

(a) Install the 4 rubber insulators on the lead wires.

NOTICE:

Be careful of the rubber insulators installation direction.

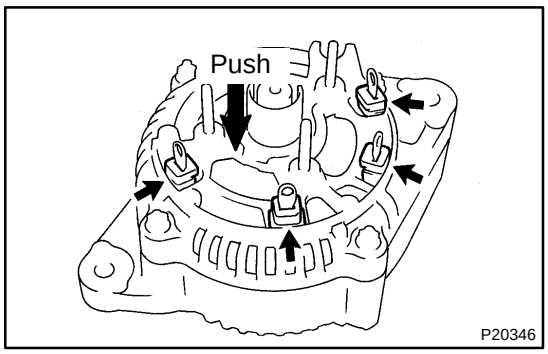

(b) Install the rectifier holder while pushing it with the 4 screws.
Torque: 2.0 N·m (20 kgf·cm, 18 in.·lbf)

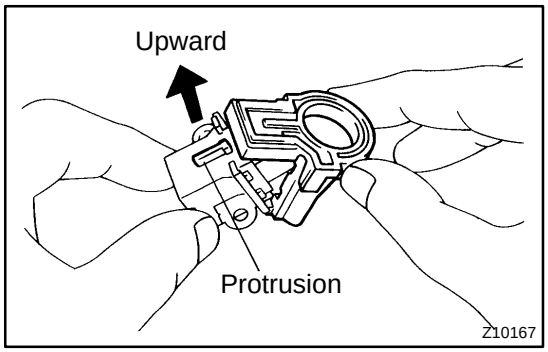

5. INSTALL BRUSH HOLDER AND VOLTAGE REGULATOR

(a) Install the brush holder cover to the brush holder.

NOTICE:

Be careful of the holder installation direction.

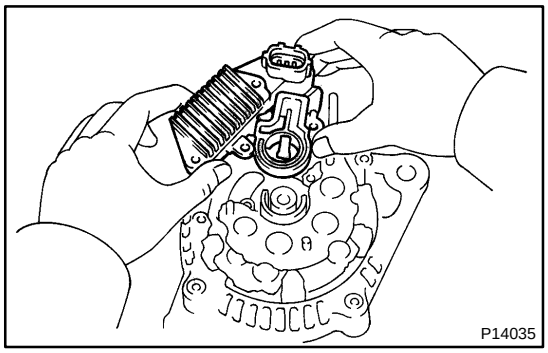

(b) Install the voltage regulator and brush holder to the rear end frame horizontally as shown in the illustration.

HINT:

Check that the brush holder's cover doesn't slip to one side during installation.

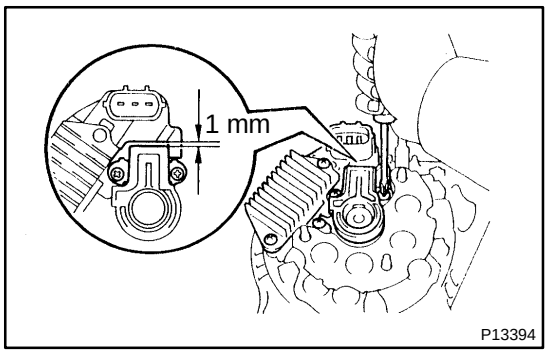

(c) Tighten the 5 screws until there is a clearance of at least 1 mm (0.04 in.) between the brush holder cover and connector.

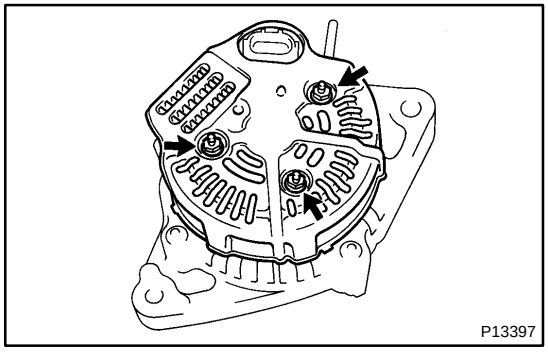

6. INSTALL REAR END COVER

(a) Install the end cover with the 3 nuts.
Torque: 4.5 N·m (45 kgf·cm, 39 in.·lbf)

(b) Install the terminal insulator with the nut.
Torque: 4.1 N·m (42 kgf·cm, 36 in.·lbf)

7. CHECK THAT ROTOR ROTATES SMOOTHLY

CH0CF–01

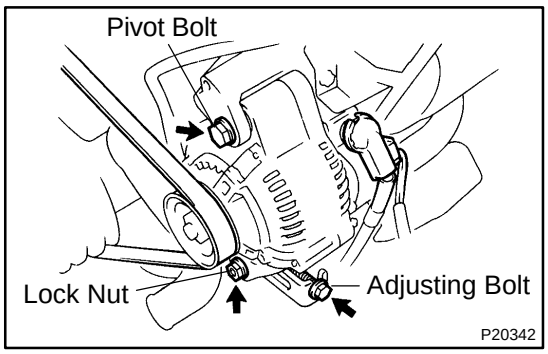

REMOVAL

1. REMOVE GENERATOR DRIVE BELT

(a) Loosen the adjusting lock nut and pivot bolt.

(b) Loosen the adjusting bolt, and remove the drive belt.

2. REMOVE GENERATOR

(a) Disconnect the generator connector.

(b) Remove the nut, and disconnect the generator wire.

(c) Remove the pivot bolt and adjusting lock nut.

(d) Remove the generator.

Torque:
51 N·m (520kgf·cm, 38 ft·lbf) for pivot bolt
18.5 N·m (189kgf·cm, 25 ft·lbf) for adjusting lock nut

CH0CI–03

REPLACEMENT

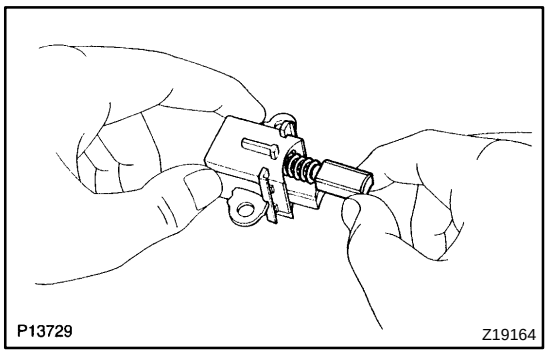

1. REPLACE BRUSHES

(a) Unsolder and remove the brush and spring.

(b) Run the wire of a new brush through the spring and the hole in the brush holder, and insert the spring and brush into the brush holder.

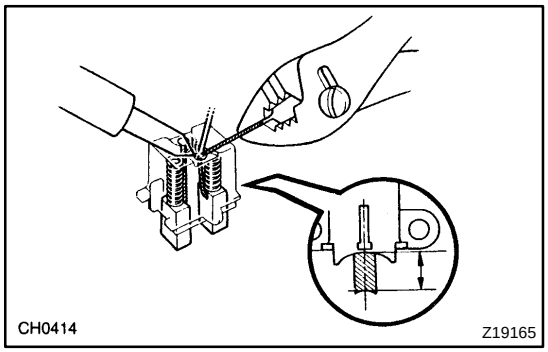

(c) Solder the brush wire to the brush holder at the specified exposed length.
Exposed length: 9.5 – 11.5 mm (0.374 – 0.453 in.)

(d) Check that the brush moves smoothly in the brush holder.

(e) Cut off the excess wire.

(f) Apply insulation paint to the soldered area.

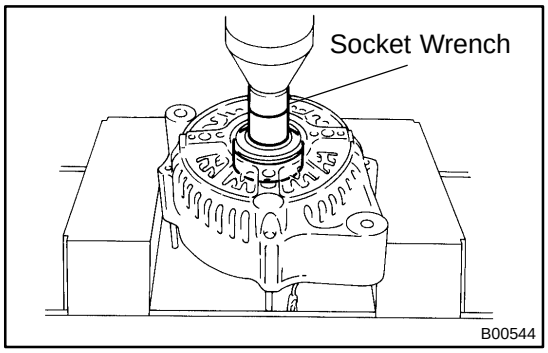

2. REPLACE FRONT BEARING

(a) Remove the 4 screws, bearing retainer and bearing.

(b) Using a socket wrench and press, press out the bearing.

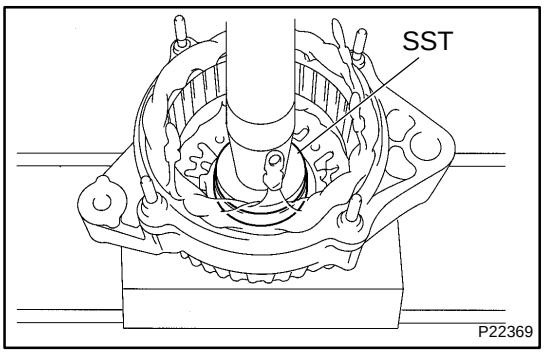

(c) Using SST and a press, press in a new bearing.
SST 09950–60010 (09951–00500)

(d) Install the bearing retainer with the 4 screws.
Torque: 2.6 N·m (27 kgf·cm, 23 in.·lbf)

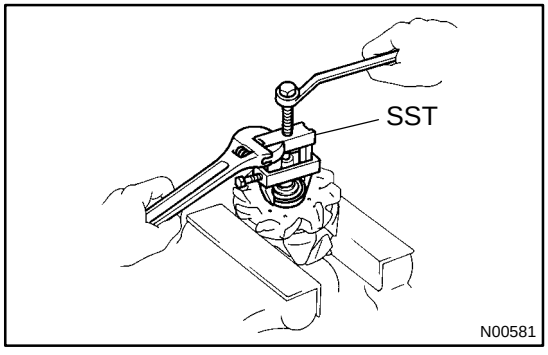

3. REPLACE REAR BEARING

(a) Using SST, remove the bearing cover (outside) and bearing.
SST 09820–00021

NOTICE:
Be careful not to damage the fan.

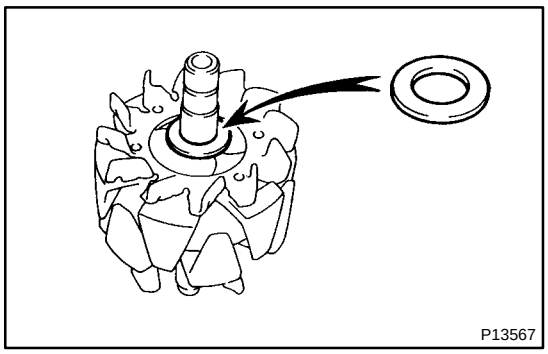

(b) Remove the bearing cover (inside).
(c) Place the bearing cover (inside) on the rotor.

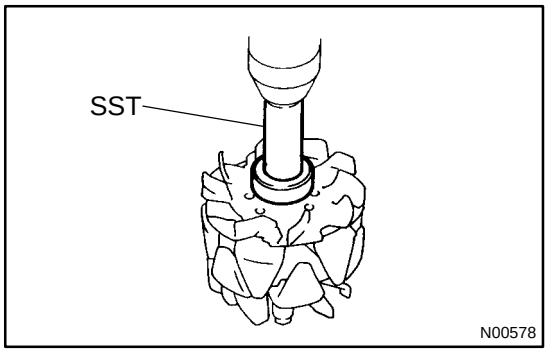

(d) Using SST and a press, press in a new bearing.
SST 09820–00031

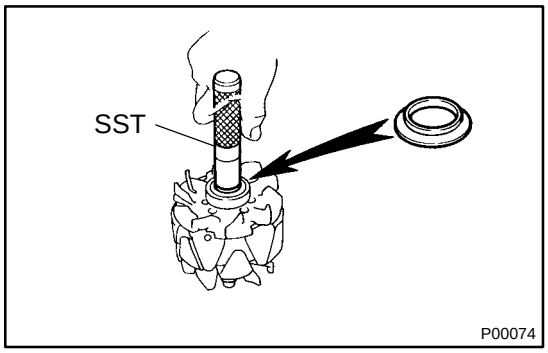

(e) Using SST, push in the bearing cover (outside).
SST 09285–76010

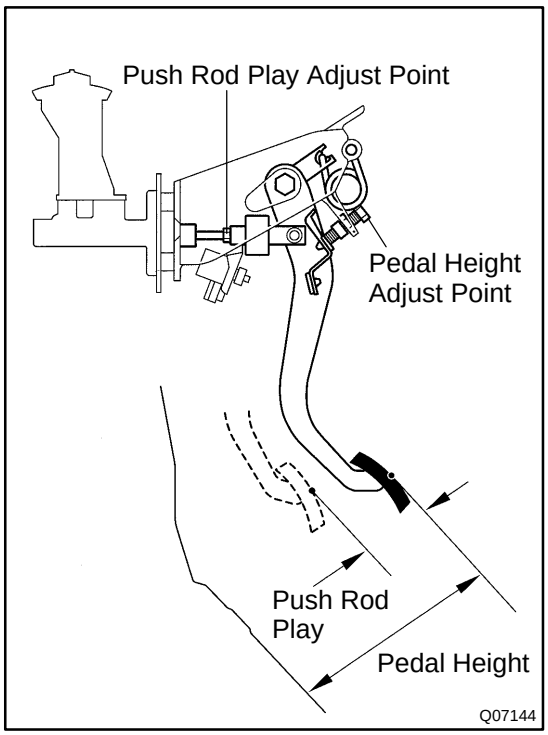

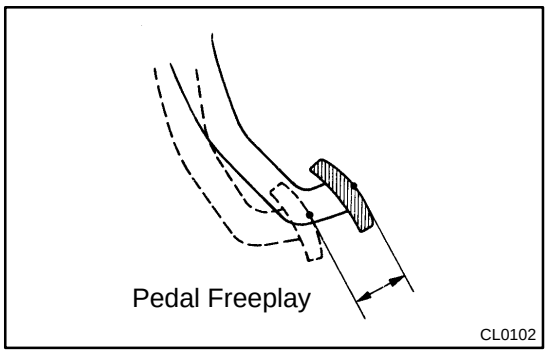

CLUTCH PEDAL

CL01P–01

INSPECTION

1. CHECK THAT PEDAL HEIGHT IS CORRECT

Pedal height from floor panel:
170.0–180.0 mm (6.692–7.086 in.)
Pedal height from asphalt sheet:
167.0–177.0 mm (6.574–6.968 in.)

2. IF NECESSARY, ADJUST PEDAL HEIGHT

Loosen the lock nut and turn the stopper bolt until the height is correct. Tighten the lock nut.

3. CHECK THAT PEDAL FREE PLAY AND PUSH ROD PLAY ARE CORRECT

(a) Depress the pedal until the clutch resistance begins to be felt.

Pedal free play: 5.0 – 15.0 mm (0.197 – 0.591 in.)

(b) Gently depress the pedal until the resistance begins to increase a little.

Push rod play at pedal top:
1.0–5.0 mm (0.039–0.197 in.)

4. IF NECESSARY, ADJUST PEDAL FREEPLAY AND PUSH ROD PLAY

(a) Loosen the lock nut and turn the push rod until the freeplay and push rod play are correct.
(b) Tighten the lock nut.
(c) After adjusting the pedal freeplay, check the pedal height.
(d) Connect the air duct and install the lower finish panel.

5. CHECK CLUTCH RELEASE POINT

(a) Pull the parking brake lever and install wheel stopper.
(b) Start the engine and idle the engine.
(c) Without depressing the clutch pedal, slowly shift the shift lever into reverse position until the gears contact.

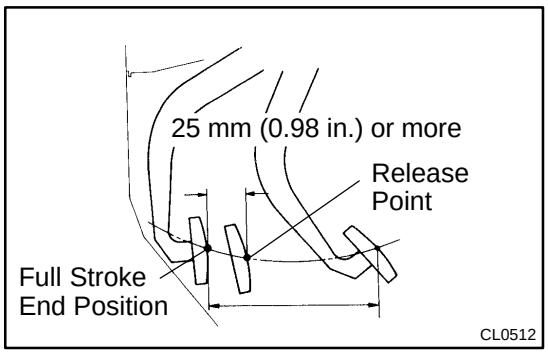

(d) Gradually depress the clutch pedal and measure the stroke distance from the point that the gear noise stops (release point) up to the full stroke end position.
Standard distance: 25 mm (0.98 in.) or more (From pedal stroke end position to release point)

If the distance is not as specified, perform the following operation.

- Check pedal height.
- Check push rod play and pedal freeplay.
- Bleed the clutch line.
- Check the clutch cover and disc.

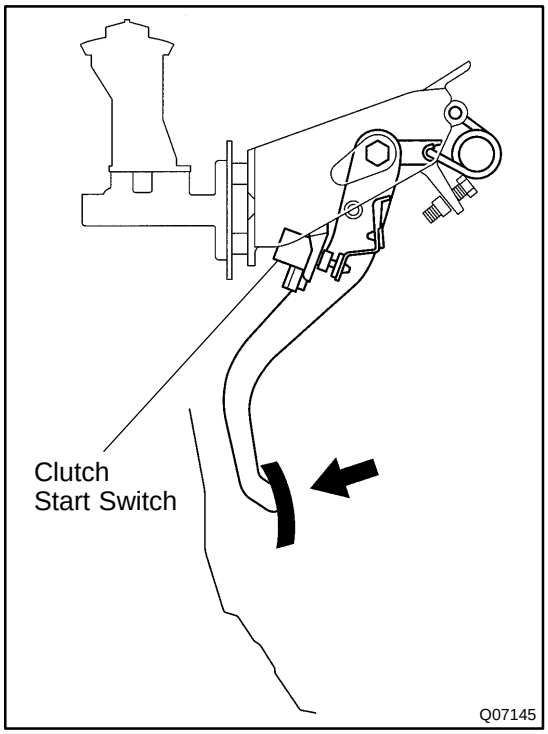

6. CHECK CLUTCH START SYSTEM

(a) Check that the engine does not start when the clutch pedal is released.
(b) Check that the engine starts when the clutch pedal is fully depressed.

If necessary, replace the clutch start switch.

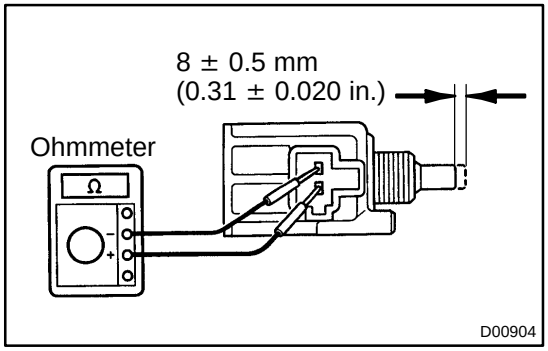

7. CHECK CONTINUITY OF CLUTCH START SWITCH

Check the continuity between terminals when the switch is ON and OFF.

Switch position	Condition
ON (pushed)	Continuity
OFF (free)	No Continuity

If continuity is not as specified, replace the switch.

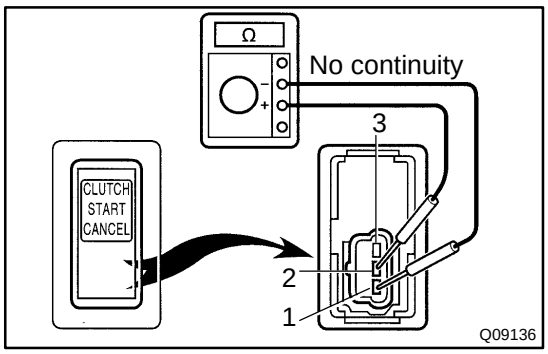

8. CHECK CONTINUITY OF CLUTCH START CANCEL SWITCH

(a) Check that there is no continuity when connecting the positive (+) lead from the ohmmeter to terminal 2 and the negative (–) lead to terminal 1.

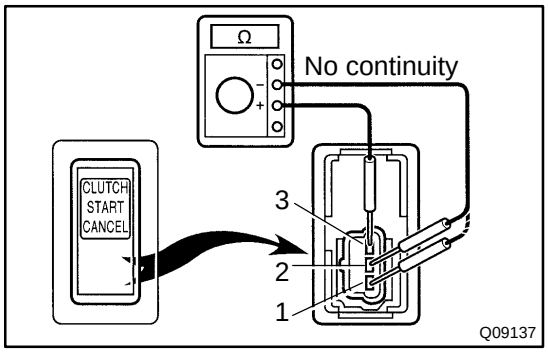

(b) Check that there is no continuity when connecting the positive (+) lead from the ohmmeter to terminal 3 and the negative (–) lead to terminal 1.

(c) Check the there is no continuity between terminals 2 and 3.

If the continuity is not as specified, replace the clutch start cancel switch.

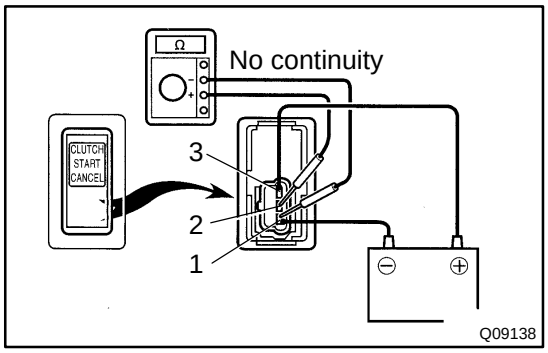

9. CHECK OPERATION OF CLUTCH START CANCEL SWITCH

(a) Connect positive (+) lead from the battery to terminal 3 and connect negative (–) lead to terminal 1.

(b) Check that there is no continuity when connecting the positive (+) lead from the ohmmeter to terminal 2 and the negative (–) lead to terminal 1.

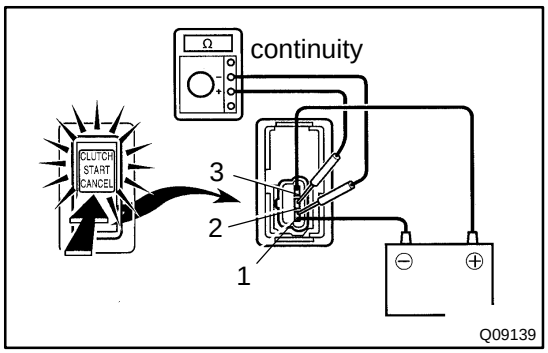

(c) When pushing the switch and check that the indicator light comes on and there is continuity between terminal 1 and 2.

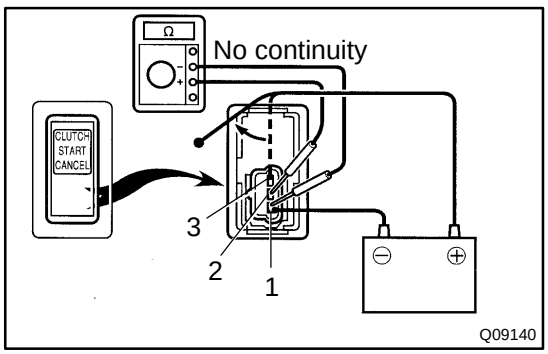

(d) Check that there is no continuity between terminals 1 and 2 when disconnecting the battery lead.

If continuity is not as specified, replace the clutch start cancel switch.

CLUTCH UNIT

CL020–01

COMPONENTS

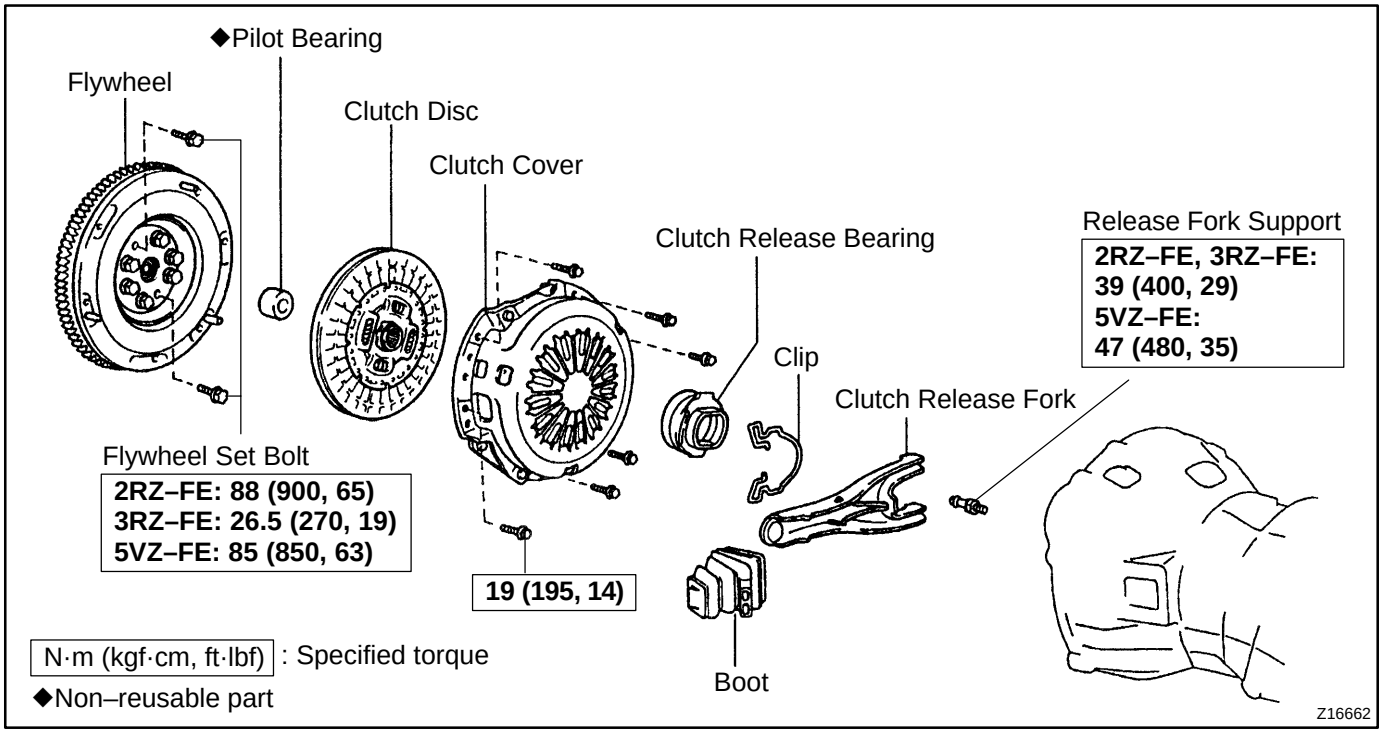

CL022–01

INSPECTION

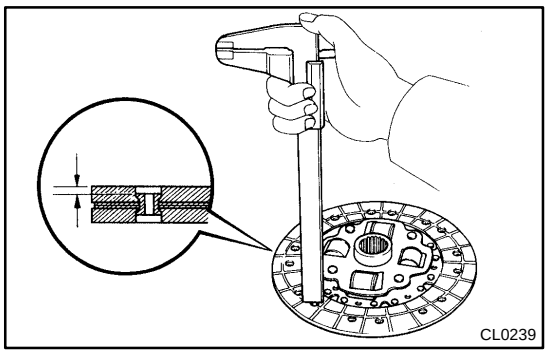

1. INSPECT CLUTCH DISC FOR WEAR OR DAMAGE

Using calipers, measure the rivet head depth.

Minimum rivet depth: 0.3 mm (0.012 in.)

If necessary, replace the clutch disc.

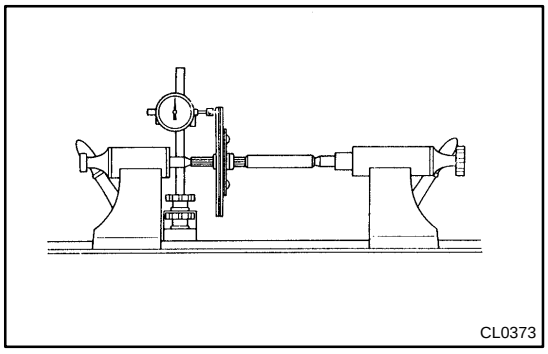

2. INSPECT CLUTCH DISC RUNOUT

Using a dial indicator, check the disc runout.

Maximum runout: 0.8 mm (0.031 in.)

If necessary, replace the clutch disc.

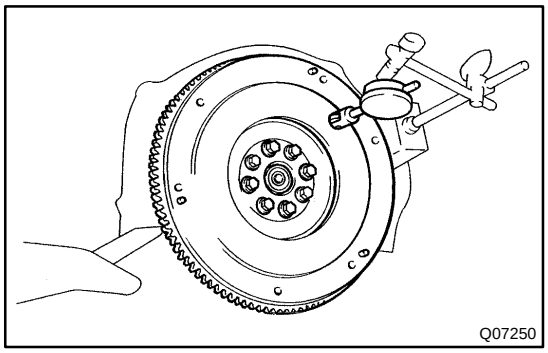

3. INSPECT FLYWHEEL RUNOUT

Using a dial indicator, check the flywheel runout.

Maximum runout: 0.1 mm (0.004 in.)

If necessary, replace the flywheel.

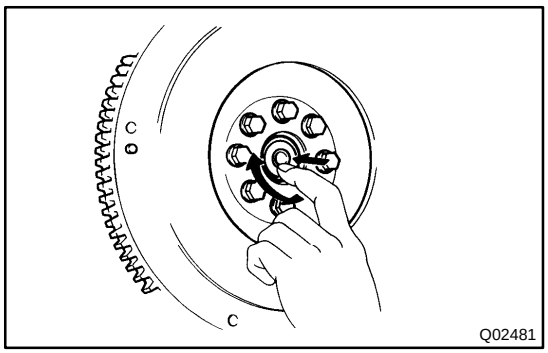

4. INSPECT PILOT BEARING

Turn the bearing by hand while applying force in the rotation direction.

If the bearing sticks or has much resistance, replace the pilot bearing.

HINT:

The bearing is permanently lubricated and requires no clearing or lubrication.

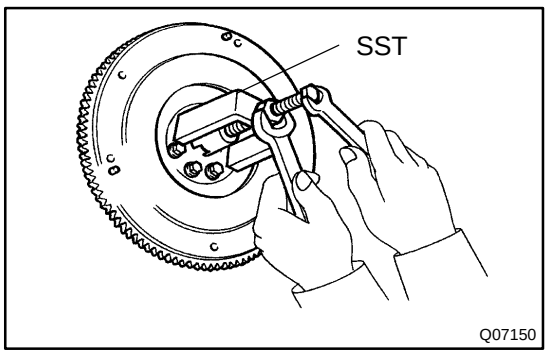

5. IF NECESSARY, REPLACE PILOT BEARING

(a) Remove the 2 bolts at diametrically opposite points.

(b) Using SST, remove the pilot bearing.

SST 09303–35011

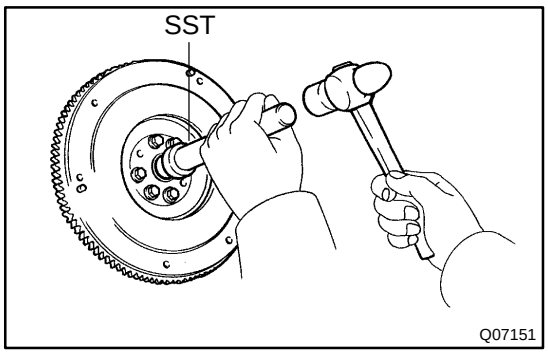

(c) Using SST and a hammer, install the pilot bearing.
SST 09304–30012

HINT:
After assembling the pilot bearing to the hub, make sure that it rotates smoothly.

(d) Install 2 new bolts.
Torque:
2RZ–FE Engine: 88 N·m (900 kgf·cm, 65 ft·lbf)
3RZ–FE Engine: 26.5 N·m (270 kgf·cm, 19 ft·lbf)
5VZ–FE Engine: 85 N·m (850 kgf·cm, 63 ft·lbf)

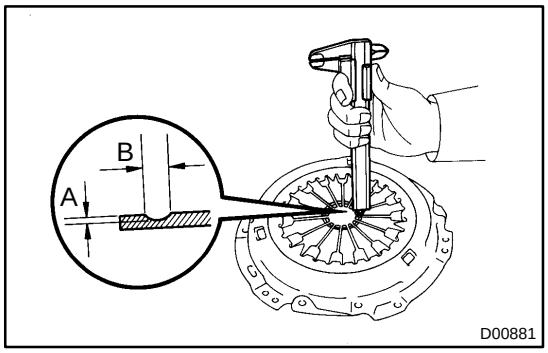

6. INSPECT DIAPHRAGM SPRING FOR WEAR

Using calipers, measure the diaphragm spring for depth and width of wear.

Maximum depth A: 0.6 mm (0.024 in.)
Maximum width B: 5.0 mm (0.197 in.)

If necessary, replace the clutch cover.

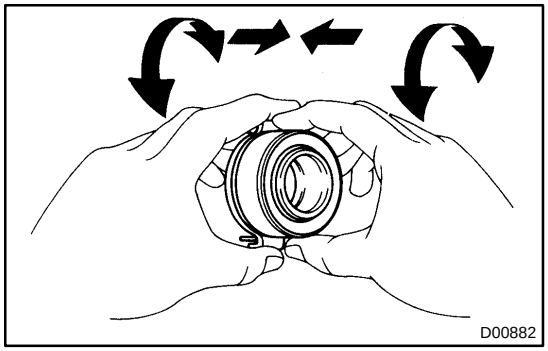

7. INSPECT RELEASE BEARING

Turn the bearing by hand while applying force in the axial direction.

HINT:
The bearing is permanently lubricated and requires no cleaning or lubrication.

If necessary, replace the release bearing.

CL023–01

INSTALLATION

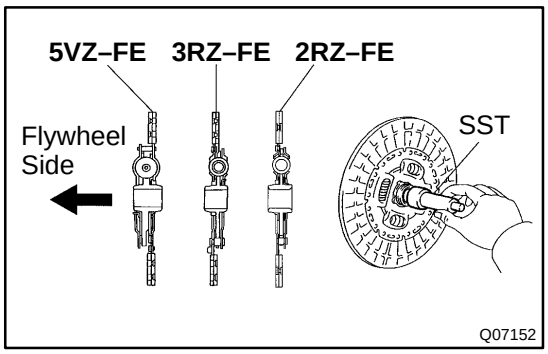

1. INSTALL CLUTCH DISC AND CLUTCH COVER ON FLYWHEEL

(a) Insert the SST in the clutch disc, and then set them.
SST 09301–00110

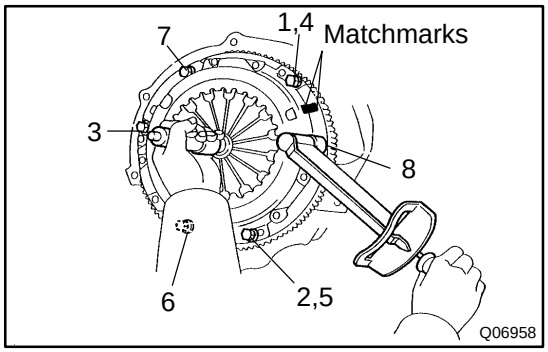

(b) Align the matchmarks on the clutch cover and flywheel.
(c) Torque the 6 bolts on the clutch cover in the order shown.
Torque:19 N·m (195 kgf·cm, 14 ft·lbf)

HINT:
Temporarily tighten the No.1 and No.2 bolts.

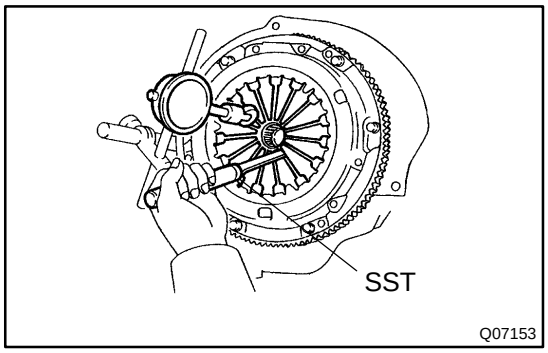

2. CHECK DIAPHRAGM SPRING TIP ALIGNMENT

Using a dial indicator with roller instrument, check the diaphragm spring tip alignment.
Maximum non–alignment: 0.5 mm (0.020 in.)

If alignment is not as specified, using SST, adjust the diaphragm spring tip alignment.
SST 09333–00013

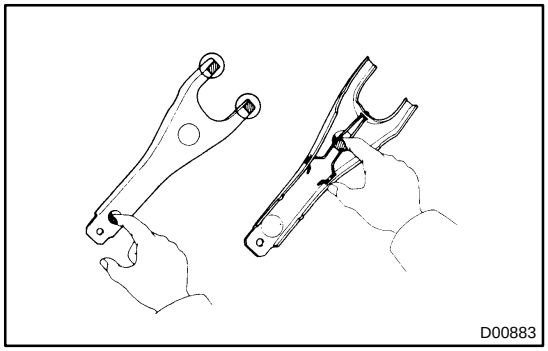

3. APPLY MOLYBDENUM DISULPHIDE LITHIUM BASE GREASE (NLGI NO.2)

(a) Apply release hub grease to these parts:
- Release fork and hub contact point
- Release fork and push rod contact point
- Release fork pivot point

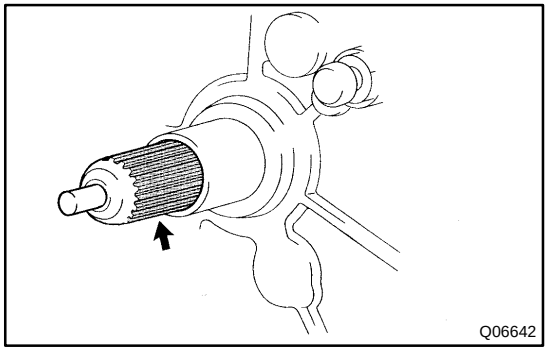

(b) Apply clutch spline grease.
- Clutch disc spline

HINT:
Recommended grease part number 08887–01706 (100 g).

4. INSTALL BOOT, RELEASE BEARING AND FORK TO TRANSMISSION

Install the boot and bearing to the release fork, and then install them to the transmission.

5. INSTALL TRANSMISSION TO ENGINE

- W59 M/T(2WD): See page MT–3
- W59 M/T(4WD): See page MT–8
- R150 M/T: See page MT–3
- R150F M/T: See page MT–7

CL021–01

REMOVAL

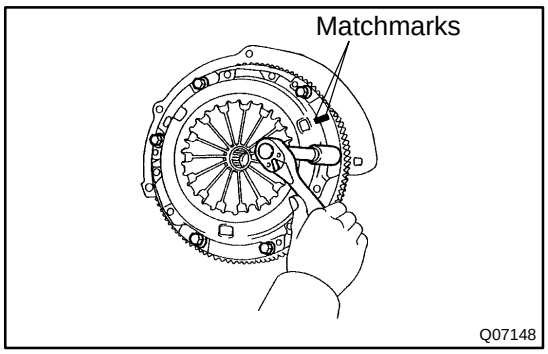

1. REMOVE TRANSMISSION FROM ENGINE

- W59 M/T(2WD): See page MT–3
- W59 M/T(4WD): See page MT–8
- R150 M/T: See page MT–3
- R150F M/T: See page MT–7

2. REMOVE CLUTCH COVER AND DISC

(a) Place matchmarks on the flywheel and clutch cover.

(b) Loosen each set bolt one turn at a time until spring tension is released.

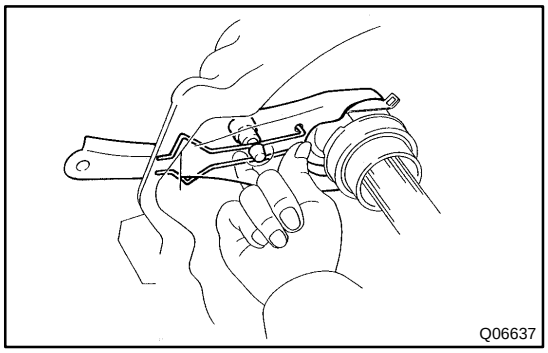

(c) Remove the set bolts, and pull off the clutch cover with the clutch disc.

NOTICE:

Do not drop the clutch disc.

3. REMOVE BOOT, RELEASE BEARING AND FORK FROM TRANSMISSION

Remove the boot and release bearing together with the fork and then separate them.

CLUTCH MASTER CYLINDER

COMPONENTS

CL01Q–01

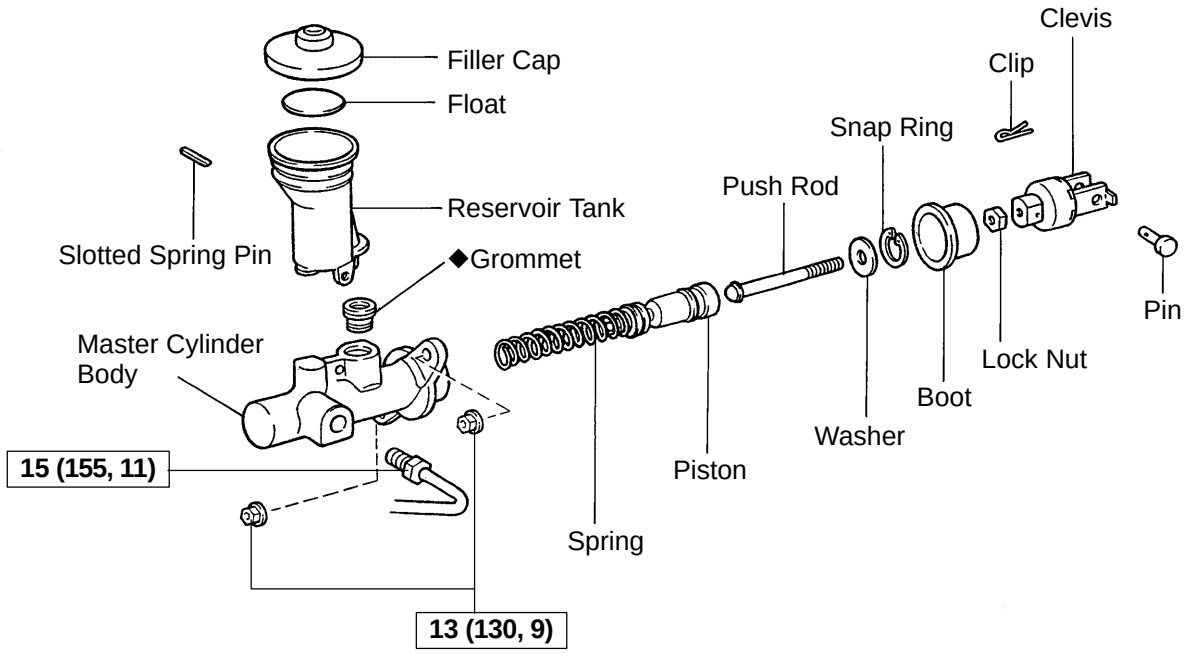

N·m (kgf·cm, ft·lbf) : Specified torque

◆Non–reusable part

Q06643

CL01S–01

DISASSEMBLY

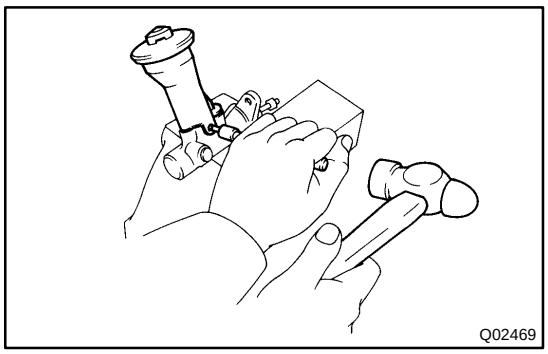

1. REMOVE RESERVOIR TANK

(a) Using a pin punch and hammer, drive out the slotted spring pin.

(b) Remove the reservoir tank and grommet.

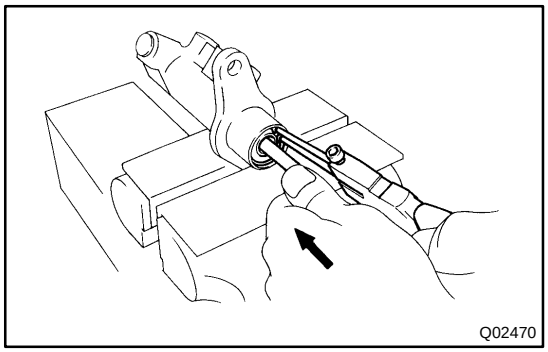

2. REMOVE PUSH ROD

Pull back the boot, and using snap ring pliers, remove the snap ring.

3. REMOVE PISTON

CL01U–01

INSTALLATION

Installation is in the reverse order of removal (See page CL–6).

HINT:

After installation, bleed the system and adjust the clutch pedal.

CL01T–01

REASSEMBLY

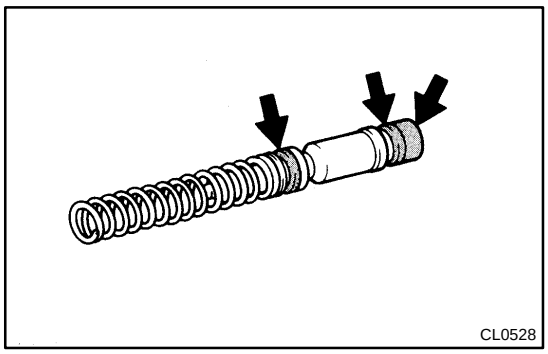

1. COAT PARTS WITH LITHIUM SOAP BASE GLYCOL GREASE, AS SHOWN

2. INSERT PISTON INTO CYLINDER

3. INSTALL PUSH ROD ASSEMBLY WITH SNAP RING

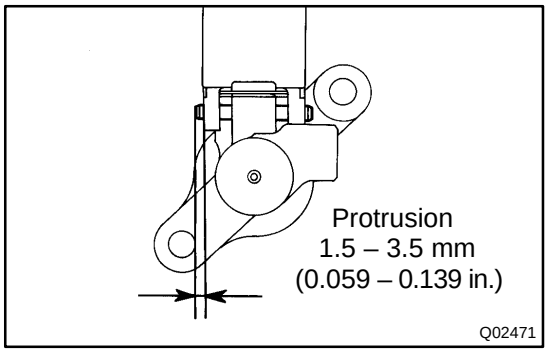

4. INSTALL RESERVOIR TANK

(a) Install the reservoir tank and a new grommet.

(b) Using a pin punch and hammer, drive in the slotted spring pin.

CL01R–01

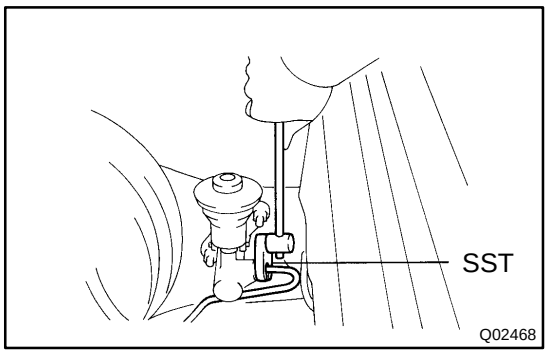

REMOVAL

1. DRAW OUT FLUID WITH SYRINGE

2. DISCONNECT CLUTCH LINE

Using SST, disconnect the line. Use a container to catch the fluid.

SST 09023–00100

Torque: 15 N·m (155 kgf·cm, 11 ft·lbf)

3. REMOVE CLIP AND CLEVIS PIN

4. REMOVE MOUNTING NUTS AND PULL OUT MASTER CYLINDER

Torque: 13 N·m (130 kgf·cm, 9 ft·lbf)

CLUTCH RELEASE CYLINDER

CL01V–01

COMPONENTS

R150, R150F T/M

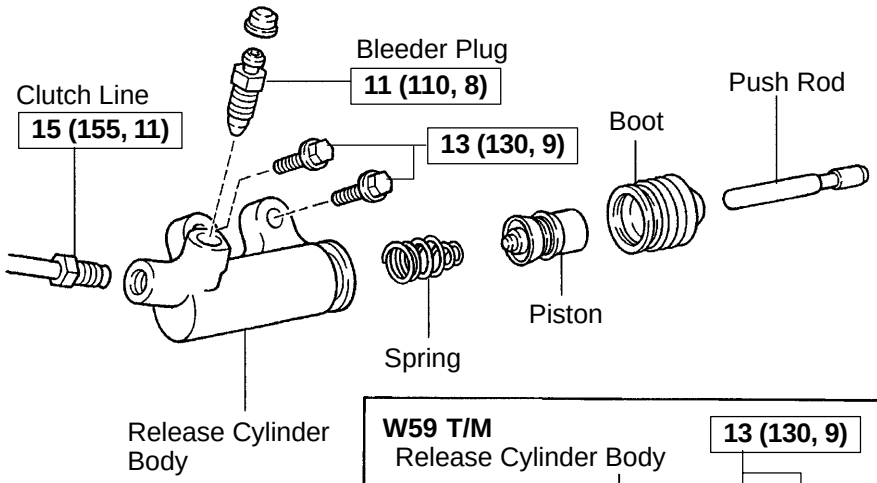

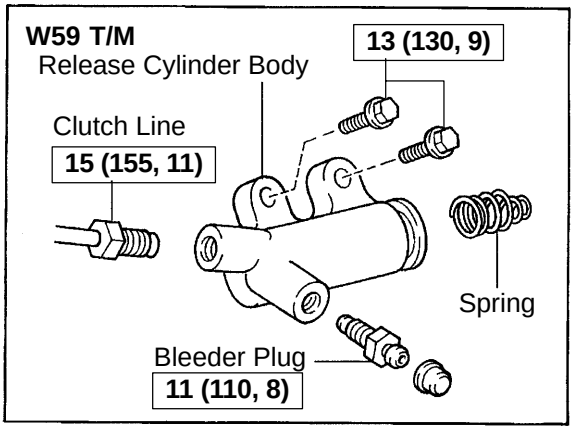

N·m (kgf·cm, ft·lbf) : Specified torque

Q07146

CL01X–01

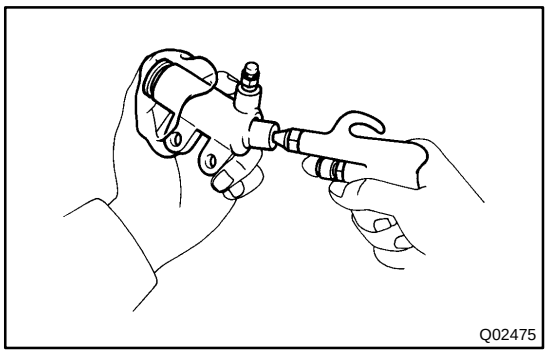

DISASSEMBLY

1. PULL OUT BOOT WITH PUSH ROD

2. REMOVE PISTON

Using compressed air, remove the piston with the spring from the cylinder.

CL01Z–01

INSTALLATION

Installation is in the reverse order of removal (See page CL–11).

HINT:

After installation, bleed clutch system.

CL01Y–01

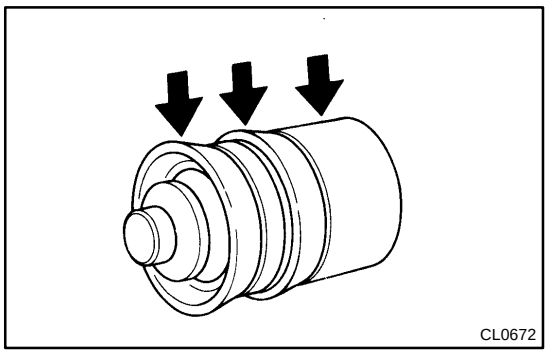
CL0672

REASSEMBLY

1. **COAT PISTON WITH LITHIUM SOAP BASE GLYCOL GREASE, AS SHOWN**
2. **INSTALL PISTON WITH SPRING INTO CYLINDER**
3. **INSTALL BOOT WITH PUSH ROD TO CYLINDER**

CL01W–01

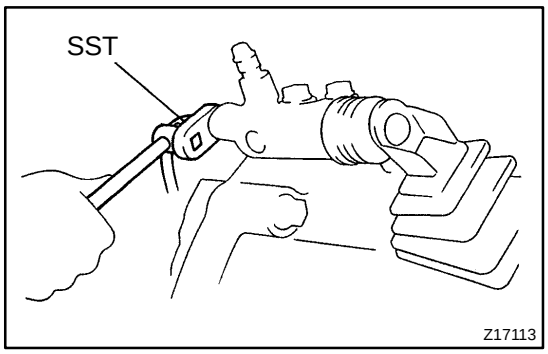

REMOVAL

1. DISCONNECT CLUTCH LINE

Using SST, disconnect the line. Use a container to catch the fluid.

SST 09023–00100

Torque: 15 N·m (155 kgf·cm, 11 ft·lbf)

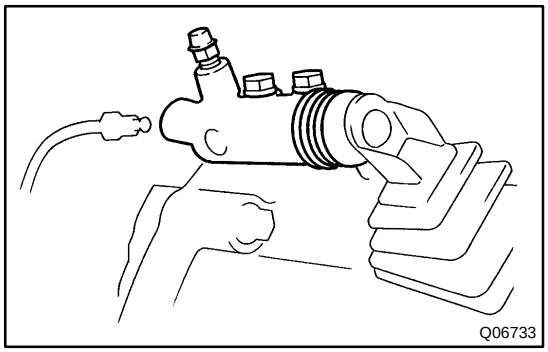

2. REMOVE 2 BOLTS AND PULL OUT RELEASE CYLINDER

Torque: 13 N·m (130 kgf·cm, 9 ft·lbf)

TROUBLESHOOTING

CL01O–01

PROBLEM SYMPTOMS TABLE

Use the table below to help you find the cause of the problem. The numbers indicate the priority of the likely cause of the problem. Check each part in order. If necessary, replace these parts.

Symptom	Suspect Area	See page
Clutch grabs/chatters	5. Engine mounting (Loosen)	–
	6. Clutch disc (Runout is excessive)	CL–15
	7. Clutch disc (Oily)	CL–15
	8. Clutch disc (Worn out)	CL–15
	9. Clutch disc torsion rubber (Damaged)	CL–15
	10. Clutch disc (Glazed)	CL–15
	11. Diaphragm spring (Out of tip alignment)	CL–15
Clutch pedal spongy	1. Clutch line (Air in line)	–
	2. Master cylinder cup (Damaged)	CL–5
	3. Release cylinder cup (Damaged)	CL–10
Clutch noisy	1. Release bearing (Worn, dirty, or damaged)	CL–15
	2. Input shaft bearing (Worn or Damaged)	MT–25 MT–27
	3. Clutch disc torsion rubber (Damaged)	CL–15
Clutch slips	1. Clutch pedal (Freeplay out of adjustment)	CL–2
	2. Clutch disc (Oily)	CL–15
	3. Clutch disc (Worn out)	CL–15
	4. Diaphragm spring (Damaged)	CL–15
	5. Pressure plate (Distortion)	CL–15
	6. Flywheel (Distortion)	–
Clutch does not disengage	1. Clutch pedal (Freeplay out of adjustment)	CL–2
	2. Clutch line (Air in line)	–
	3. Master cylinder cup (Damaged)	CL–5
	4. Release cylinder cup (Damaged)	CL–10
	5. Input shaft bearing (Worn or Damaged)	MT–25 MT–27
	6. Clutch disc (Out of true)	CL–15
	7. Clutch disc (Runout is excessive)	CL–15
	8. Clutch disc (Lining broken)	CL–15
	9. Clutch disc (Dirty or burned)	CL–15
	10. Clutch disc (Oily)	CL–15
	11. Clutch disc (Lack of spline grease)	CL–19
	12. Diaphragm spring (Damaged)	CL–15
	13. Diaphragm spring (Out of tip alignment)	CL–15
	14. Pressure plate (Distortion)	CL–15

COOLANT

CO01J–02

INSPECTION

1. CHECK ENGINE COOLANT LEVEL AT RESERVOIR TANK

The engine coolant level should be between the ”LOW” and ”FULL” lines. When the engine is cold.

If low, check for leaks and add ”TOYOTA Long Life Coolant” or equivalent up to the ”FULL” line.

2. CHECK ENGINE COOLANT QUALITY

(a) Remove the radiator cap.

CAUTION:

To avoid the danger of being burned, do not remove the radiator cap while the engine and radiator are still hot, as fluid and steam can be blown out under pressure.

(b) There should not be any excessive deposits of rust or scale around the radiator cap or water outlet filler hole, and the coolant should be free from oil.

If they are excessively dirty, clean the coolant passages and replace the coolant.

(c) Reinstall the radiator cap.

CO01K–04

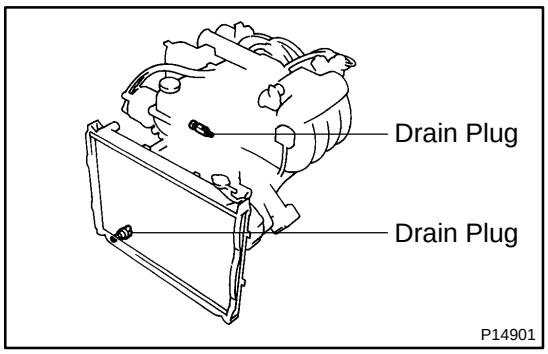

REPLACEMENT

1. DRAIN ENGINE COOLANT

(a) Remove the radiator cap.

CAUTION:

To avoid the danger of being burned, do not remove the radiator cap while the engine and radiator are still hot, as fluid and steam can be blown out under pressure.

(b) Loosen the drain plugs, and drain the engine coolant.

(c) Close the drain plugs.

2. REFILL WITH ENGINE COOLANT

(a) Slowly fill the system with engine coolant.

- Use of improper coolants may damage engine cooling system.
- Use ”TOYOTA Long Life Coolant” or equivalent and mix it with plain water according to the manufacturer’s directions.
- Use of the coolant which includes more than 50% (freezing protection down to –35˚C (–31 ˚F)) or 60% (freezing protection down to –50˚C (–58 ˚F)) of ethylene–glycol is recommended, but not more than 70%

NOTICE:

- **Do not use an alcohol type engine coolant.**
- **The engine coolant should be mixed with demineralized water or distilled water.**

Capacity:

2WD	M/T	8.0 liters (8.5 US qts, 7.0 lmp. qts)
	A/T	7.8 liters (8.2 US qts, 6.9 lmp. qts)
4WD	M/T	8.3 liters (8.8 US qts, 7.2 lmp. qts)
	A/T	8.2 liters (8.7 US qts, 7.2 lmp. qts)

(b) Reinstall the radiator cap.

(c) Start the engine, and bleed the cooling system.

(d) If necessary, refill engine coolant into the radiator reservoir until it is ”FULL” line.

3. CHECK ENGINE COOLANT FOR LEAKS

CO1BS–02

COMPONENTS

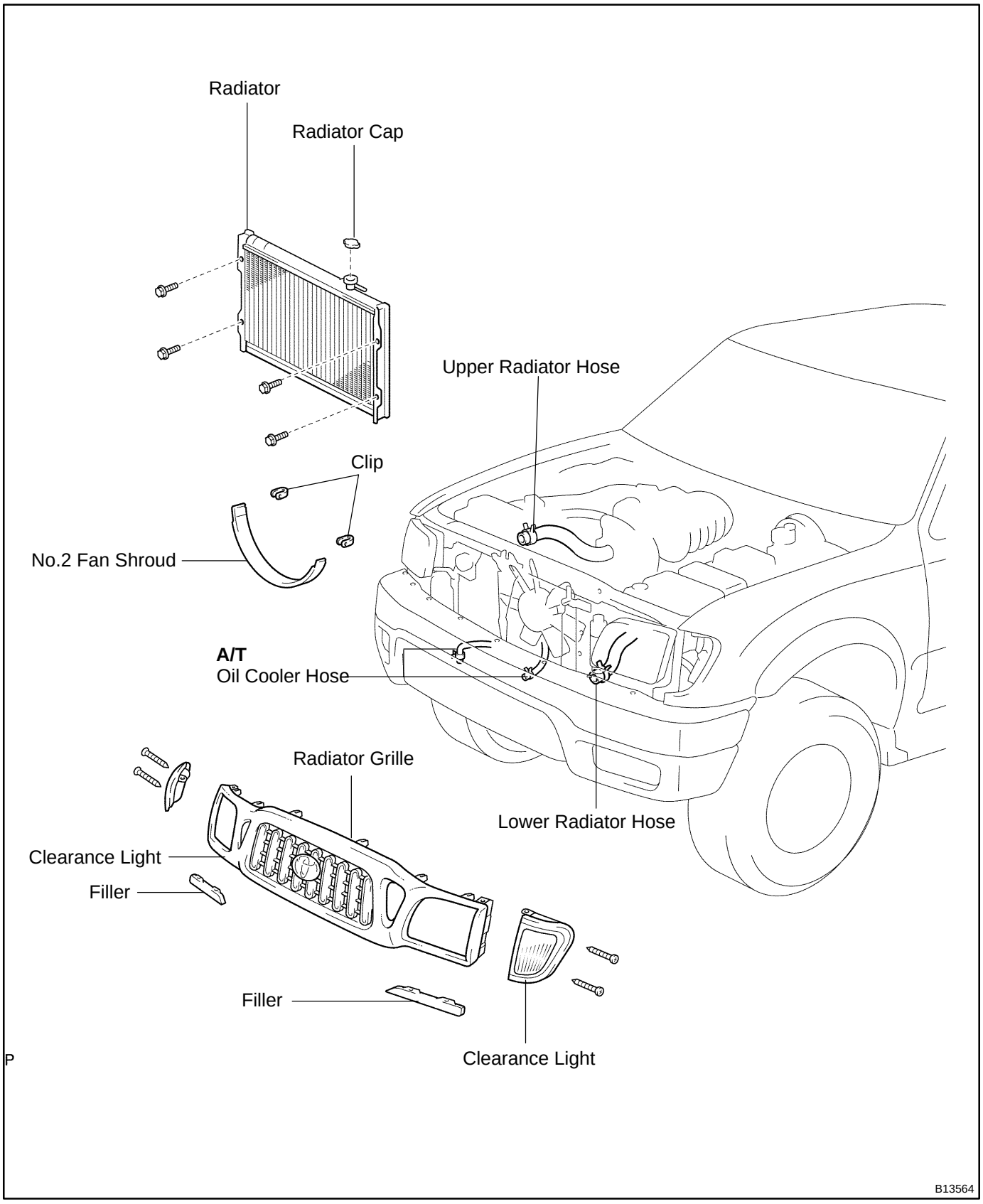

for 2RZ–FE

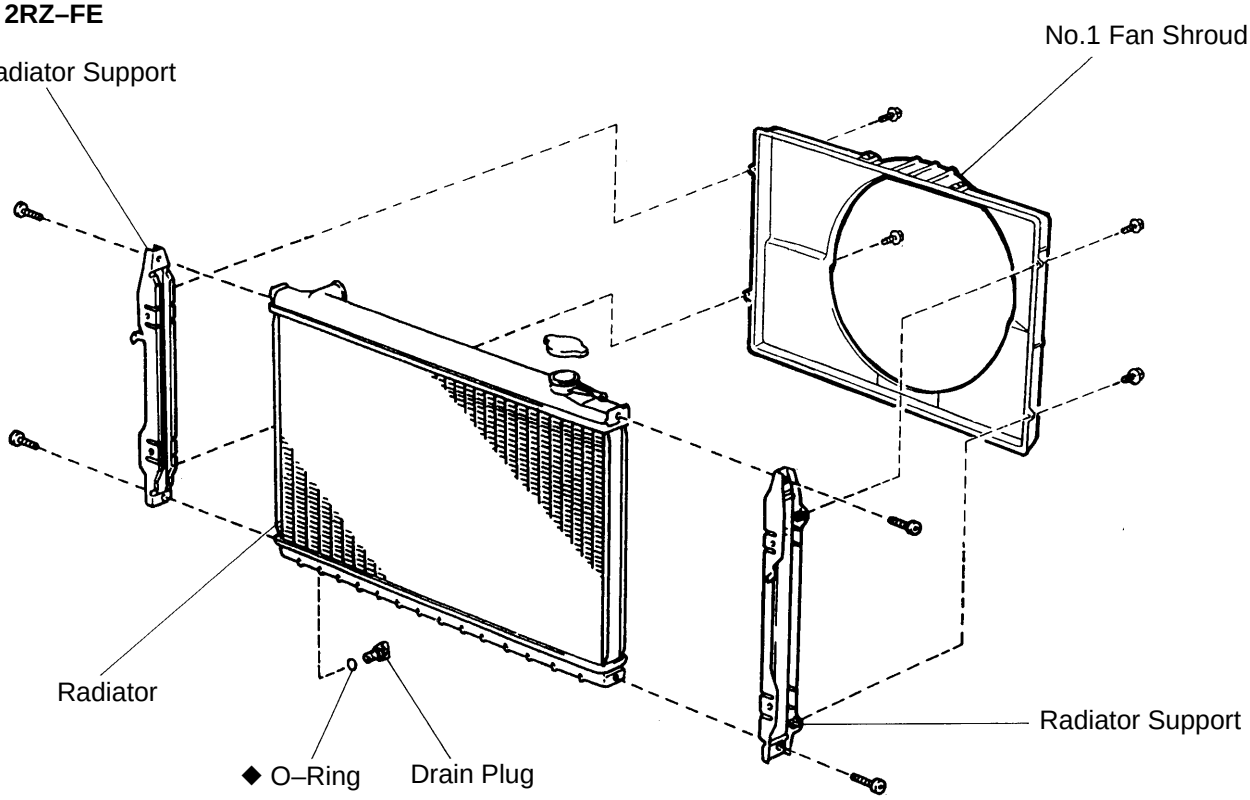

◆ Non–reusable part

P22390

for 3RZ–FE

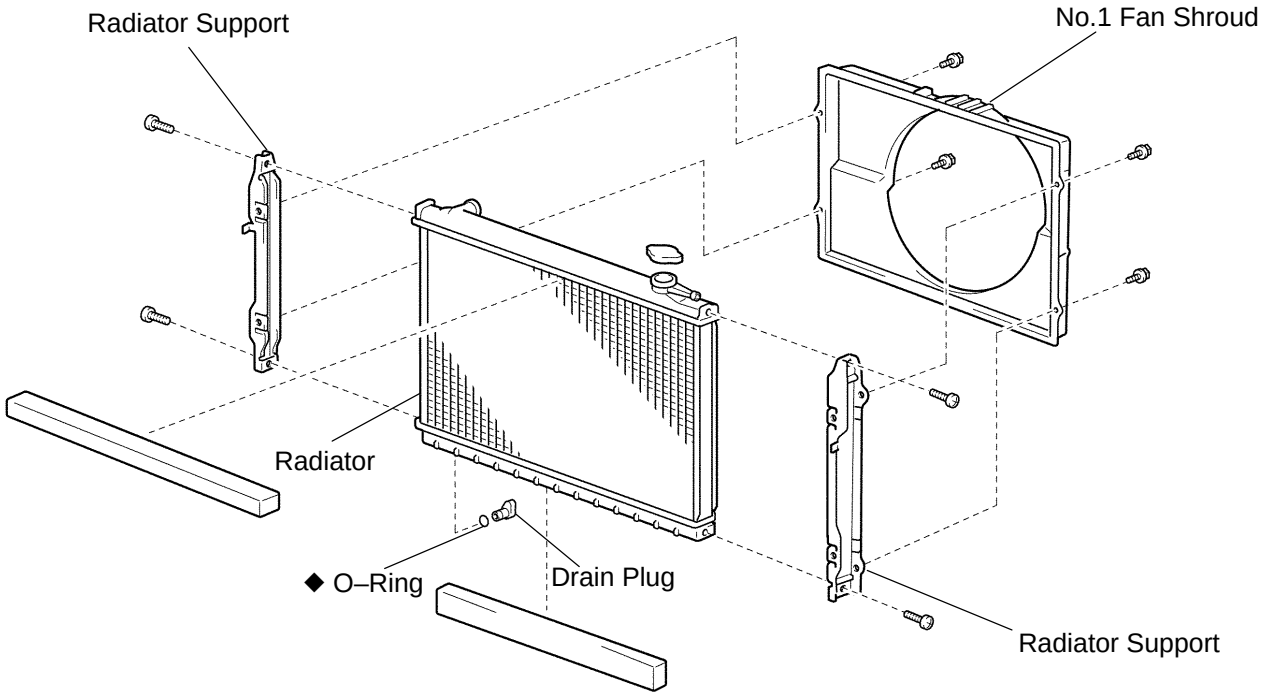

P ◆ Non–reusable part

B15538

CO01X–03

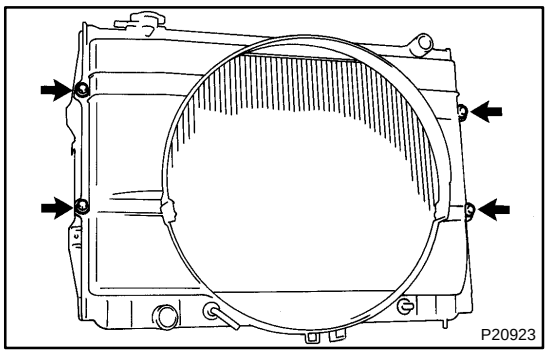

DISASSEMBLY

1. REMOVE NO.1 FAN SHROUD

Remove the 4 bolts and fan shroud.

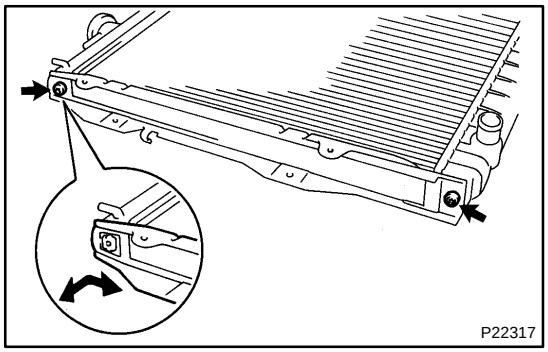

2. REMOVE RADIATOR SUPPORTS

Remove the 4 screws and 2 radiator supports.

HINT:

At the time of assembly, please refer to the following items.

Insert the tabs the radiator upper tank through the radiator support holes.

Torque: 5.5 N·m (55 kgf·cm, 49 in.·lbf)

CO0XD–02

INSTALLATION

Installation is in the reverse order of removal (See page CO–18).

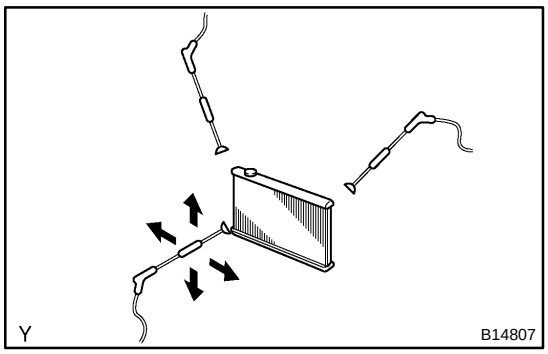

RADIATOR

CO1BR–02

ON–VEHICLE CLEANING

INSPECT FINS FOR BLOCKAGE

If fins are clogged, wash them with water or a steam cleaner and dry with compressed air.

NOTICE:

- **If the distance between the steam cleaner and the core is too close, there is a possibility of damaging the fin, so keep the following injection distance.**

Ingection Pressure	Ingection Distance
2,942 – 4,903 kpa (30 – 80 kgf·cm^2, 427 – 711 psi)	300 mm (11.811 in)
4,903 – 7,845 kpa (50 – 80 kgf·cm^2, 711 – 1,138 psi)	500 mm (19.685 in)

- **If the fins are bent, straighten them with a screwdriver or pliers.**
- **Never apply water directly onto the electronic components.**

CO01U–04

ON–VEHICLE INSPECTION

1. REMOVE RADIATOR CAP

CAUTION:

To avoid the danger of being burned, do not remove the radiator cap while the engine and radiator are still hot, as fluid and steam can be out under pressure.

2. INSPECT RADIATOR CAP

NOTICE:

- **If the radiator cap has contaminations, always rinse it with water.**
- **Before using a radiator cap tester, wet the relief valve and pressure valve with engine coolant or water.**
- **When performing step (a) and (b) below, keep the radiator cap tester at an angle of over 30°C above the horizontal.**

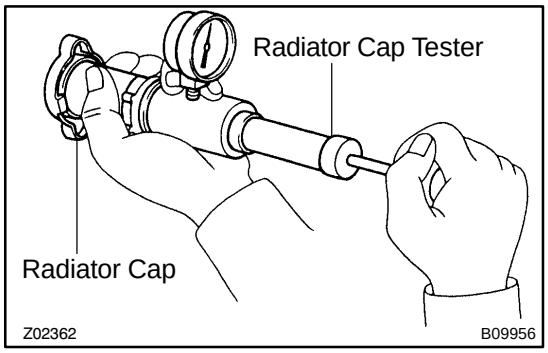

(a) Using a radiator cap tester, pump the tester and measure the relief valve opening pressure.

Pump speed: 1 push/(3 seconds or more)

NOTICE:

Push the pump at a constant speed.

If air is not coming from the vacuum valve, replace the radiator cap.

(b) Pump the tester and measure the relief valve opening pressure.

Pump speed: 1 push within 1 second

NOTICE:

This pump speed is for the first pump only (in order to close the vacuum valve). After this, the pump speed can be reduced.

Standard opening pressure:

74 – 103 kPa (0.75 – 1.05 kgf/cm^2, 10.7 – 14.9 psi)

Minimum opening pressure:

59 kPa (0.6 kgf/cm^2, 8.5 psi)

HINT:

Use the tester's maximum reading as the opening pressure.

If the opening pressure is less than minimum, replace the radiator cap.

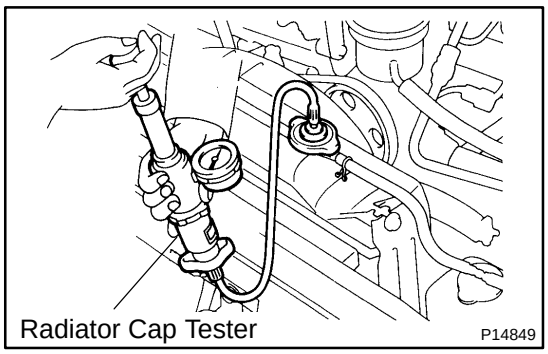
Radiator Cap Tester P14849

3. INSPECT COOLING SYSTEM FOR LEAKS

NOTICE:

Clean the radiator cap housing before install the radiator cap tester.

(a) Fill the radiator with coolant and attach a radiator cap tester.

(b) Warm up the engine.

(c) Pump it to 118 kPa (1.2 kgf/cm^2, 17.1 psi), and check that the pressure does not drop.

If the pressure drops, check the hoses, radiator or water pump for leaks. If no external leaks are found, check the heater core, cylinder block and head.

4. REINSTALL RADIATOR CAP

NOTICE:

- **Clean the radiator cap housing before install the radiator cap.**
- **If the radiator cap has contaminations, always rinse it with water.**

CO0XC–02

REASSEMBLY

Reassembly is in the reverse order of disassembly (See page CO–19).

CO17L–03

REMOVAL

1. DRAIN ENGINE COOLANT

2. REMOVE RADIATOR GRILLE (See page BO–8)

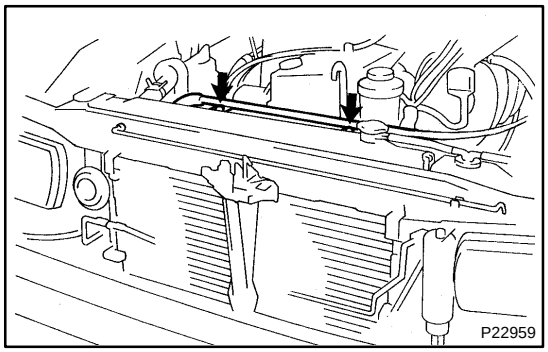

3. DISCONNECT AIR PIPE

Remove the 2 bolts and disconnect the air pipe.

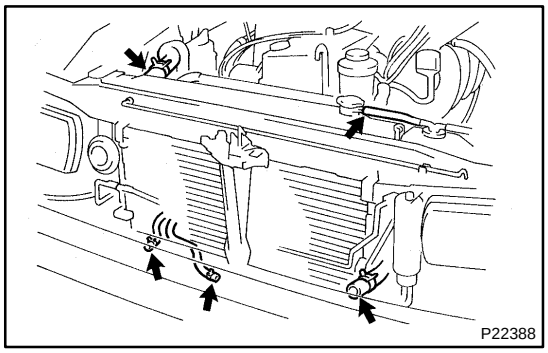

4. DISCONNECT UPPER RADIATOR HOSE

5. DISCONNECT RADIATOR RESERVOIR HOSE

6. DISCONNECT LOWER RADIATOR HOSE

7. REMOVE NO.2 FAN SHROUD

8. A/T:
DISCONNECT OIL COOLER HOSES

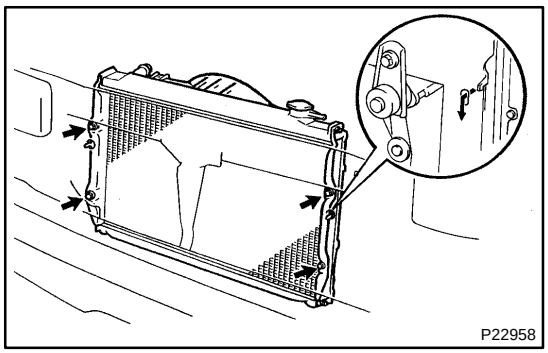

9. REMOVE RADIATOR

Remove the 4 bolts and radiator.

Torque: 12.5 N·m (125 kgf·cm, 9 ft·lbf)

HINT:

At the time of installation, please refer to the following items.
Insert the tabs of the radiator support through the radiator service holes.

THERMOSTAT

COMPONENTS

CO01P–05

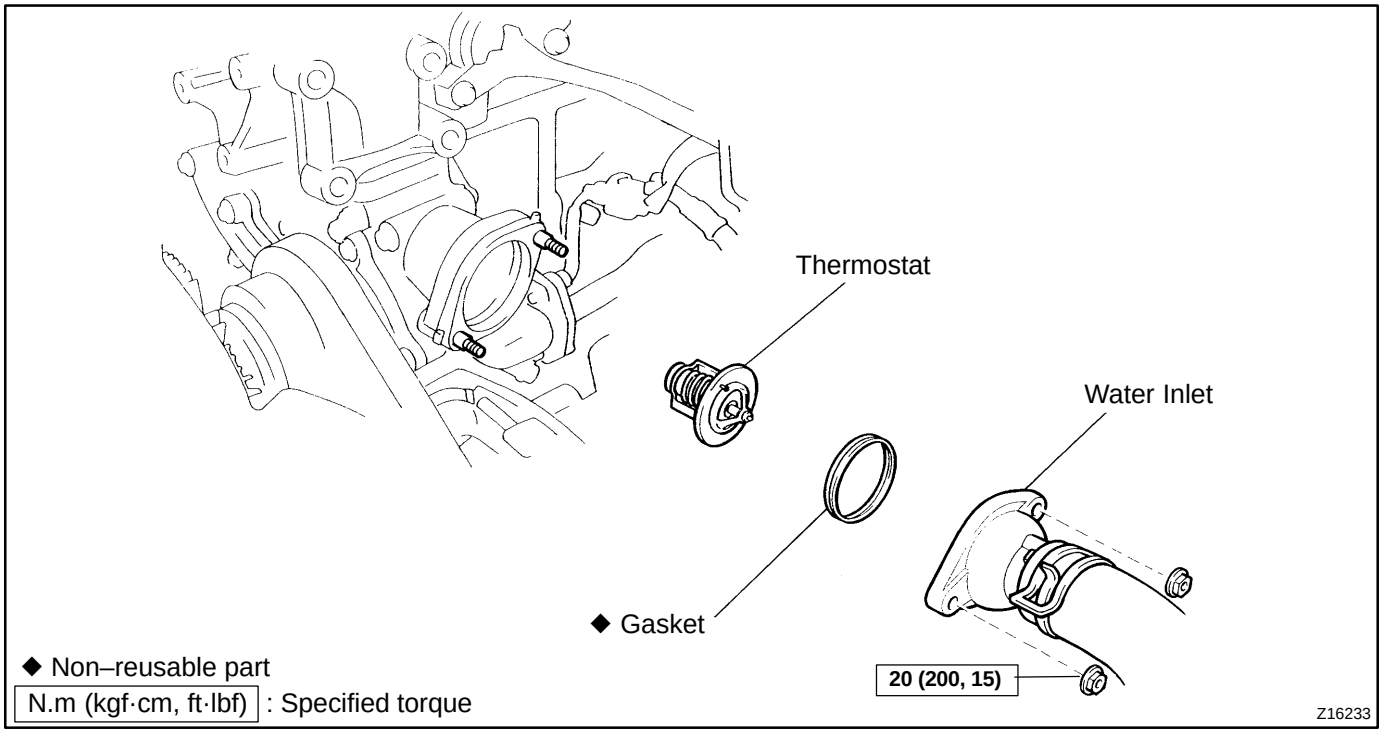

CO01R–04

INSPECTION

INSPECT THERMOSTAT

HINT:

The thermostat is numbered with the valve opening temperature.

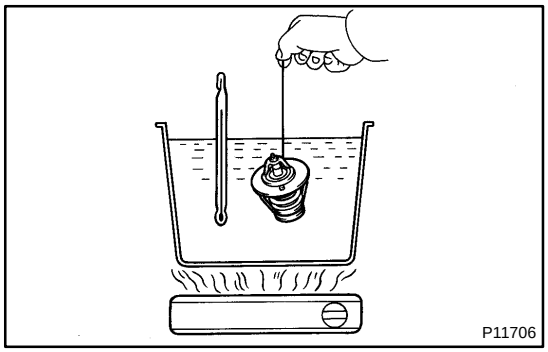

(a) Immerse the thermostat in water and gradually heat the water.

(b) Check the valve opening temperature.

Valve opening temperature: 80 – 84˚C (176 – 183˚F)

If the valve opening temperature is not as specified, replace the thermostat.

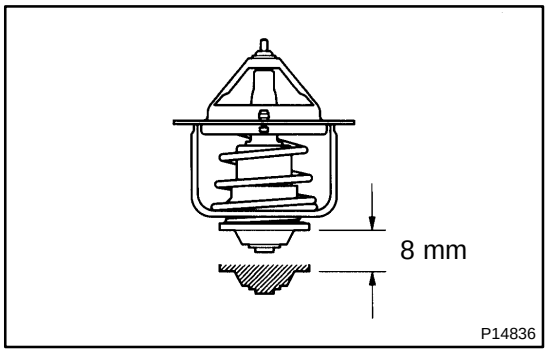

(c) Check the valve opening lift.

Valve lift: 8 mm (0.31 in.) or more at 95˚C (203˚F)

If the valve lift is not as specified, replace the thermostat.

(d) Check that the valve is fully closed when the thermostat is at low temperatures (below 40˚C (104˚F)).

If not closed, replace the thermostat.

CO01S–04

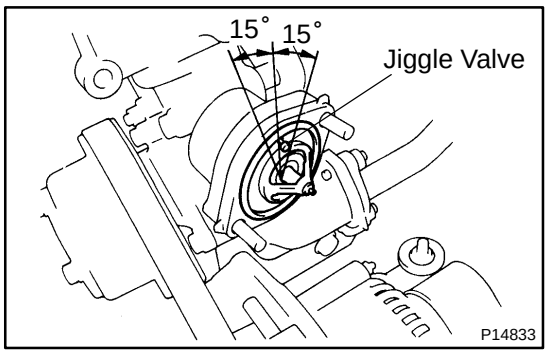

INSTALLATION

1. INSTALL THERMOSTAT

(a) Place a new gasket to the thermostat.

(b) Align the jiggle valve of the thermostat with the protrusion of the water inlet housing, and insert the thermostat in the water inlet housing.

HINT:

The jiggle valve may be set within 15° of either side of the prescribed position.

(c) Install the water inlet with the 2 nuts.

HINT:

Facing the top mark (protrusion) upward.

Torque: 20 N·m (200 kgf·cm, 15 ft·lbf)

2. CONNECT LOWER RADIATOR HOSE

3. FILL WITH ENGINE COOLANT

4. START ENGINE AND CHECK FOR LEAKS

CO01Q–04

REMOVAL

1. DRAIN ENGINE COOLANT

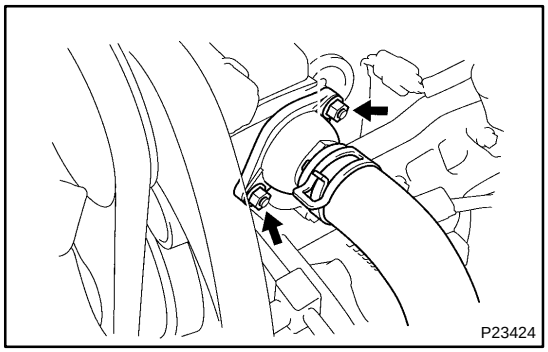

2. DISCONNECT LOWER RADIATOR HOSE

3. REMOVE THERMOSTAT

(a) Remove the 2 nuts, water inlet and thermostat with gasket from the water pump.

(b) Remove the gasket from the thermostat.

WATER PUMP

COMPONENTS

CO01L–05

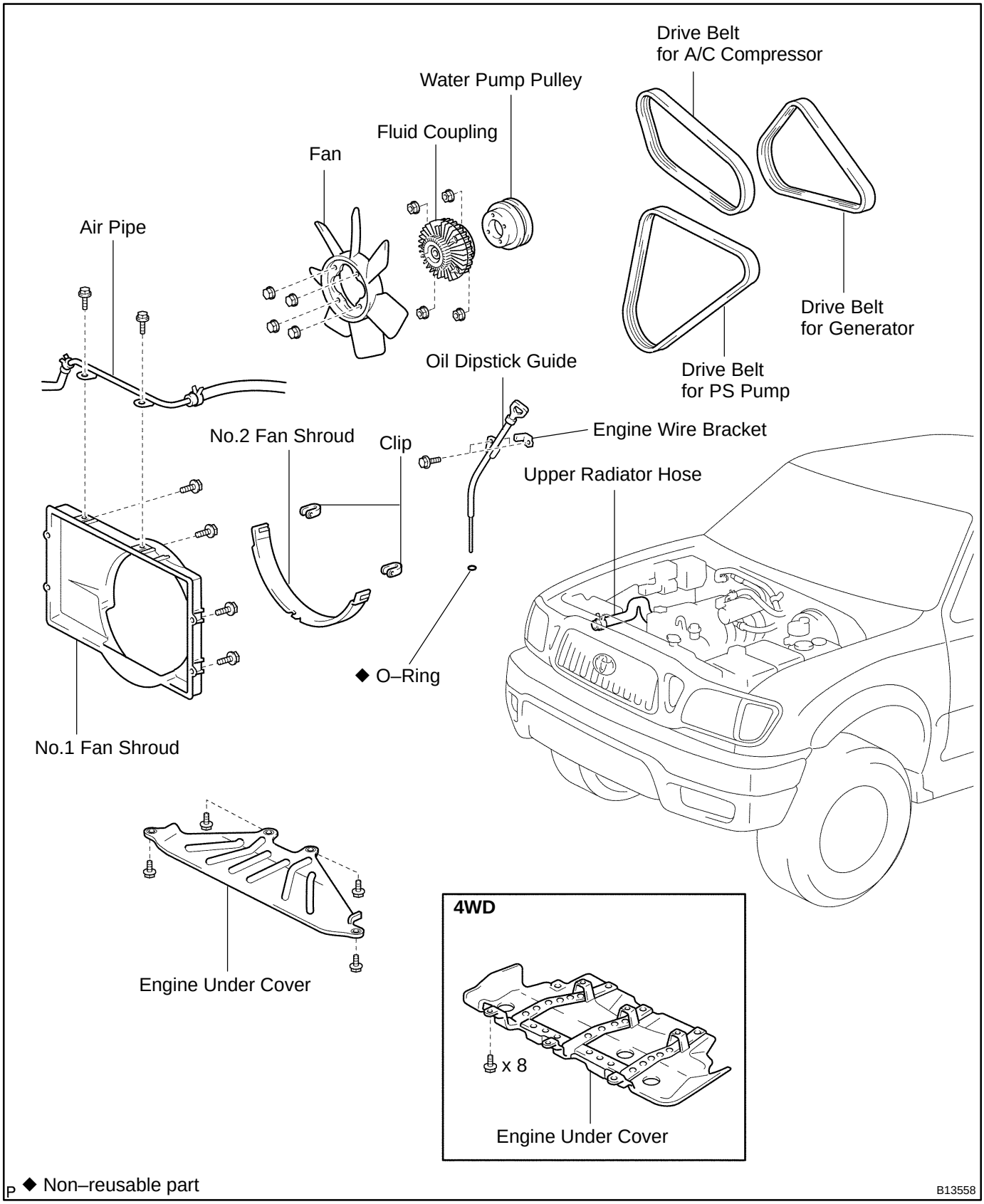

P ◆ Non–reusable part

B13558

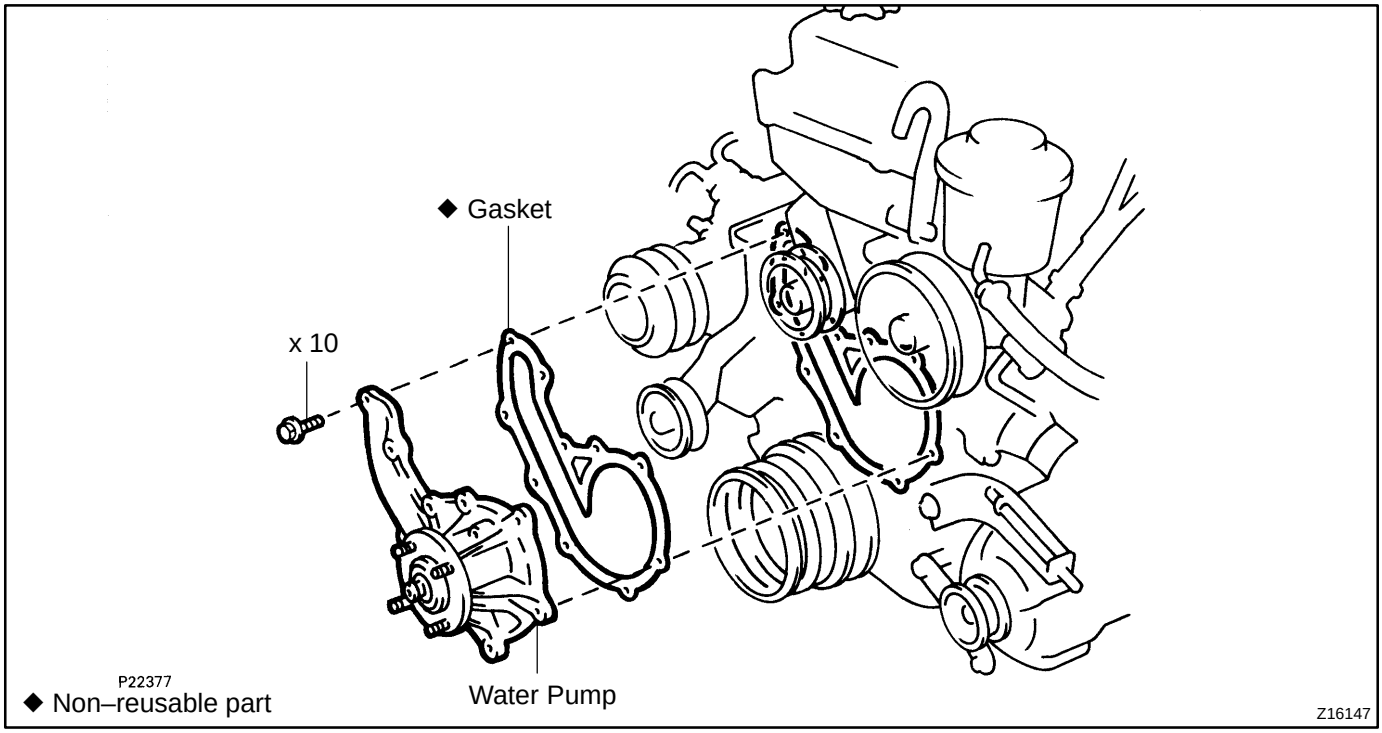
◆ Gasket
x 10
P22377
◆ Non–reusable part
Water Pump
Z16147

CO01N–03

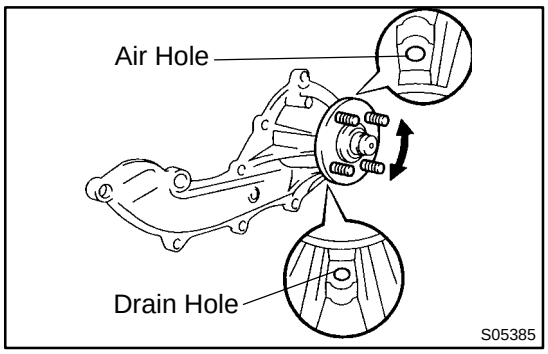

INSPECTION

1. INSPECT WATER PUMP

(a) Visually check the air hole and drain hole for coolant leakage.

If leakage is found, replace the water pump.

(b) Turn the pulley, and check that the water pump bearing moves smoothly and quietly.

If necessary, replace the water pump.

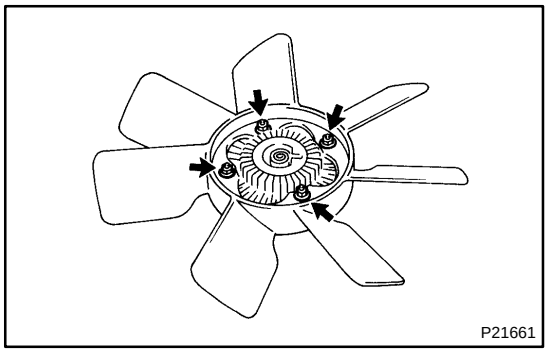

2. INSPECT FLUID COUPLING

(a) Remove the 4 nuts and fan from the fluid coupling.

(b) Check the fluid coupling for damage and silicon oil leakage.

If necessary, replace the fluid coupling.

(c) Install the fan and fluid coupling with the 4 nuts.

Torque: 5.5 N·m (55 kgf·cm, 49 in.·lbf)

CO0XB–02

INSTALLATION

Installation is in the reverse order of removal (See page CO–5).

CO01M–05

REMOVAL

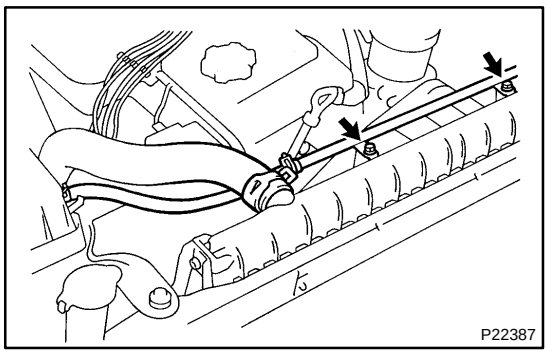

1. REMOVE ENGINE UNDER COVER

2. DRAIN ENGINE COOLANT

3. DISCONNECT AIR PIPE

Remove the 2 bolts and disconnect the air pipe from the fan shroud.

4. DISCONNECT UPPER RADIATOR HOSE FROM RADIATOR

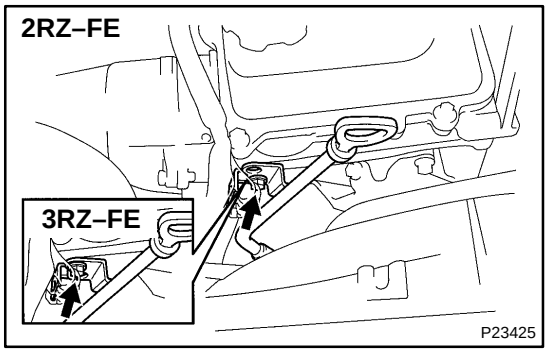

5. REMOVE OIL DIPSTICK GUIDE

(a) Remove the bolt, dipstick guide and engine wire bracket.

(b) Remove the O–ring from the dipstick guide.

HINT:

At the time of installation, please refer to the following items.

Use a new O–ring.

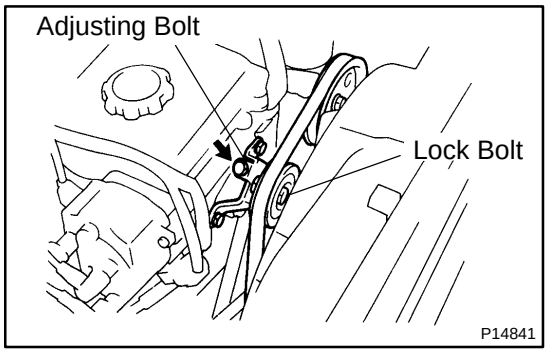

6. w/ PS:

REMOVE DRIVE BELT FOR PS PUMP

Loosen the lock bolt and adjusting bolt, and remove the drive belt.

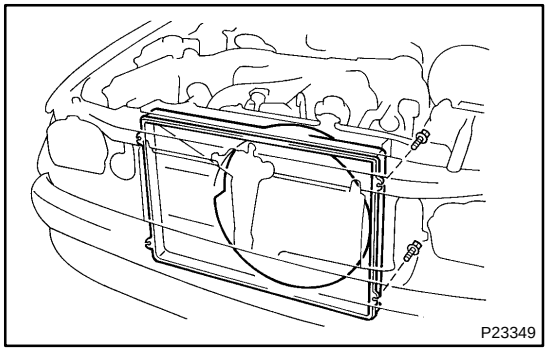

7. REMOVE FAN SHROUDS

(a) Remove the 2 clips and No.2 fan shroud.

(b) Remove the 4 bolts and No.1 fan shroud.

8. REMOVE DRIVE BELT FOR A/C COMPRESSOR

Loosen the idler pulley nut and adjusting bolt, and remove the drive belt.

9. REMOVE DRIVE BELT FOR GENERATOR, FAN WITH FLUID COUPLING AND WATER PUMP PULLEY

(a) Loosen the water pump pulley nuts.

(b) Loosen the lock bolt and pivot bolt of generator.

(c) Loosen the Adjusting bolt of generator, remove the drive belt.

(d) Remove the 4 water pump pulley nuts.

Torque: 21 N·m (210 kgf·cm, 16 ft·lbf)

(e) Pull out the fan together with the fluid coupling and water pump pulley.

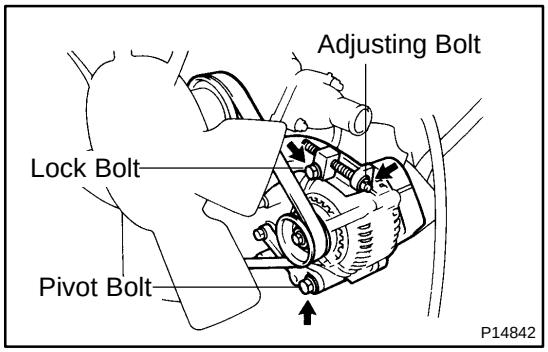

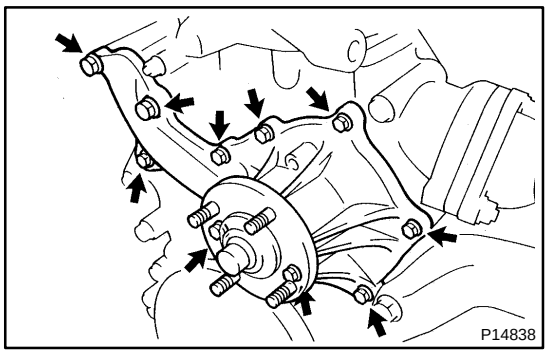

10. REMOVE WATER PUMP

Remove the 10 bolts, water pump and gasket.

Torque:
24.5 N·m (250 kgf·cm, 18 ft·lbf) for 14 mm head
8.9 N·m (90 kgf·cm, 78 in.·lbf) for 12 mm head

HINT:

At the time of installation, please refer to the following items.

Use a new gasket.

COOLANT

CO0X6–01

INSPECTION

1. CHECK ENGINE COOLANT LEVEL AT RESERVOIR TANK

The engine coolant level should be between the ”LOW” and ”FULL” lines. When the engine is cold.

If low, check for leaks and add ”TOYOTA Long Life Coolant” or equivalent up to the ”FULL” line.

2. CHECK ENGINE COOLANT QUALITY

(a) Remove the radiator cap.

CAUTION:

To avoid the danger of being burned, do not remove the radiator cap while the engine and radiator are still hot, as fluid and steam can be blown out under pressure.

(b) There should not be any excessive deposits of rust or scale around the radiator cap or water outlet filler hole, and the coolant should be free from oil.

If they are excessively dirty, clean the coolant passages and replace the coolant.

(c) Reinstall the radiator cap.

REPLACEMENT

1. DRAIN ENGINE COOLANT

(a) Remove the radiator cap.

CAUTION:

To avoid the danger of being burned, do not remove the radiator cap while the engine and radiator are still hot, as fluid and steam can be blown out under pressure.

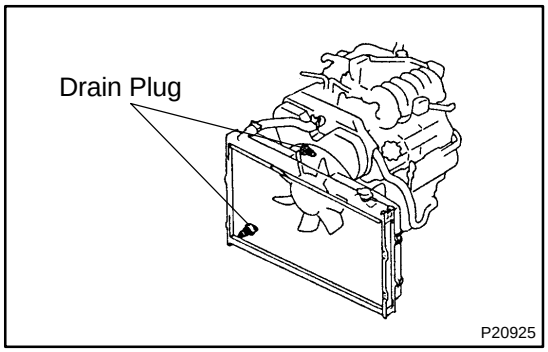

(b) Loosen the drain plugs, and drain the engine coolant.

(c) Close the drain plugs.

2. REFILL WITH ENGINE COOLANT

(a) Slowly fill the system with engine coolant.

(1) Use of improper coolants may damage engine cooling system. CO0X7–02

(2) Use ”TOYOTA Long Life Coolant” or equivalent and mix it with plain water according to the manufacturer’s directions.

(3) Use of the coolant which includes more than 50% (freezing protection down to –35˚C (–31 ˚F)) or 60% (freezing protection down to –50˚C (–58 ˚F)) of ethylene–glycol is recommended, but not more than 70%.

NOTICE:

- **Do not use an alcohol type engine coolant.**
- **The engine coolant should be mixed with demineralized water or distilled water.**

Capacity:

M/T	9.7 liters (10.3 US qts, 8.5 lmp. qts)
A/T	9.5 liters (10.0 US qts, 8.4 lmp. qts)

(b) Reinstall the radiator cap.

(c) Start the engine, and bleed the cooling system.

(d) If necessary, refill engine coolant into the reservoir until it is ”FULL” line.

3. CHECK ENGINE COOLANT FOR LEAKS

CO02E–04

COMPONENTS

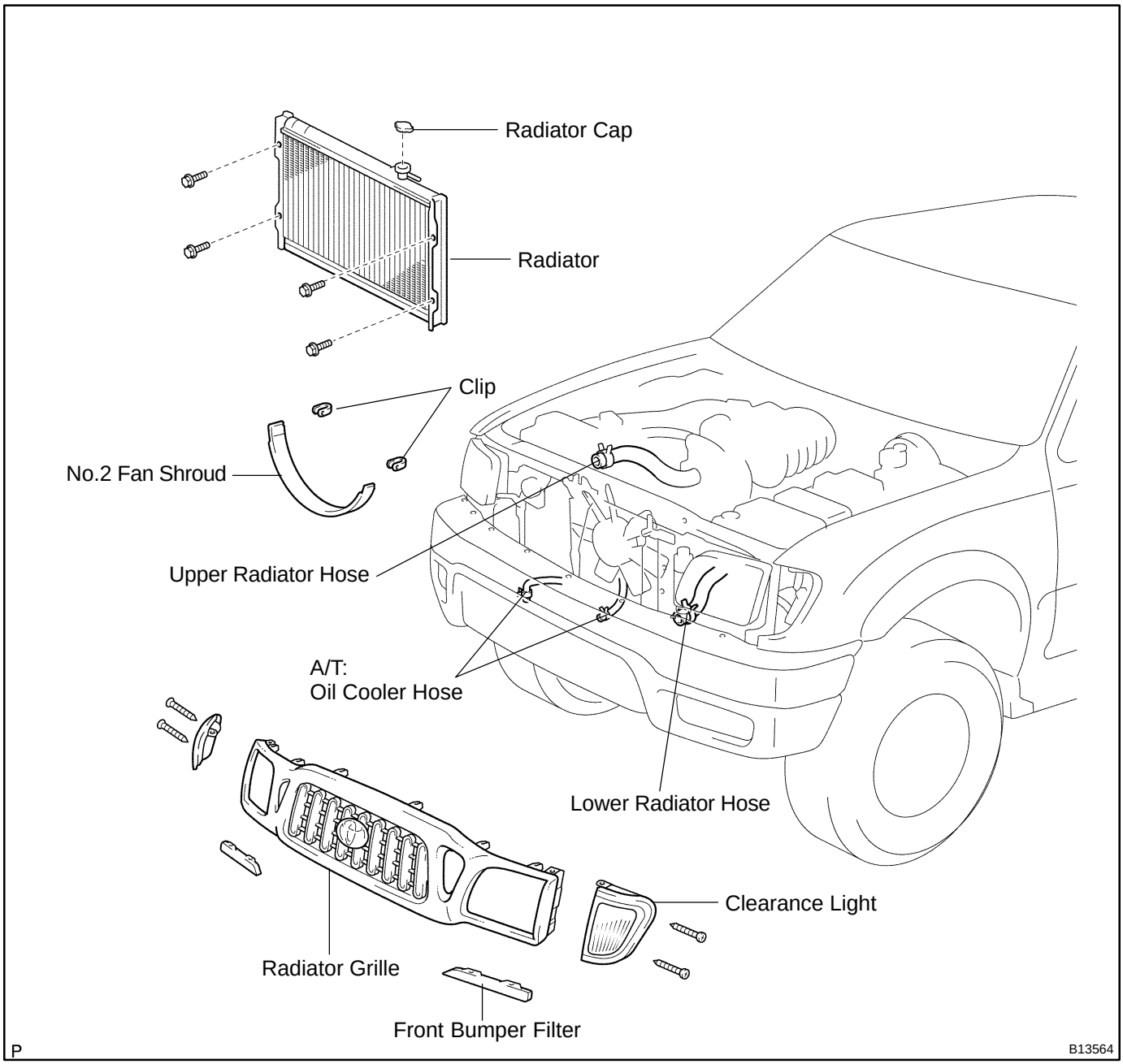

CO02G–03

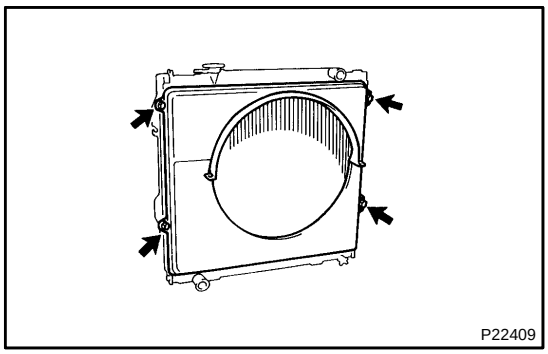

DISASSEMBLY

1. REMOVE NO.1 FAN SHROUD

Remove the 4 bolts and No.1 fan shroud.

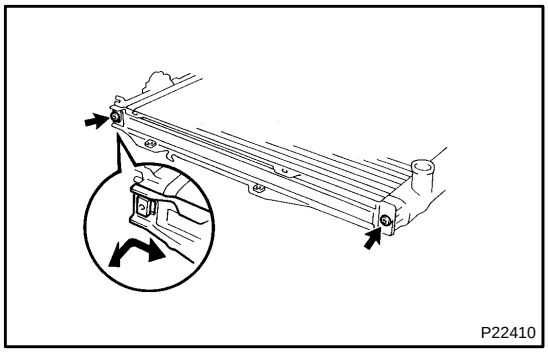

2. REMOVE RADIATOR SUPPORTS

Using a torx wrench, remove the 4 torx screws and the 2 radiator supports.

Torx wrench: T30 (Part No. 09042–00010 or locally manufactured tool)

HINT:

Lift up the floor carpet and loosen the screw.

CO0XA–01

INSTALLATION

Installation is in the reverse order of removal (See page CO–17).

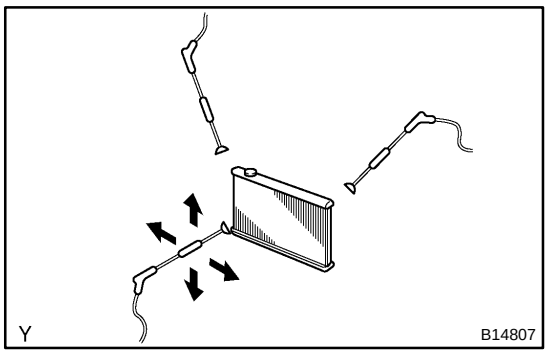

RADIATOR

CO1BQ–02

ON–VEHICLE CLEANING

INSPECT FINS FOR BLOCKAGE

If fins are clogged, wash them with water or a steam cleaner and dry with compressed air.

NOTICE:

- **If the distance between the steam cleaner and the core is too close, there is a possibility of damaging the fin, so keep the following injection distance.**

Ingection Pressure	Ingection Distance
2,942 – 4,903 kpa (30 – 80 kgf·cm^2, 427 – 711 psi)	300 mm (11.811 in)
4,903 – 7,845 kpa (50 – 80 kgf·cm^2, 711 – 1,138 psi)	500 mm (19.685 in)

- **If the fins are bent, straighten them with a screwdriver or pliers.**
- **Never apply water directly onto the electronic components.**

CO02D–07

ON–VEHICLE INSPECTION

1. REMOVE RADIATOR CAP

CAUTION:

To avoid the danger of being burned, do not remove the radiator cap while the engine and radiator are still hot, as fluid and steam can be out under pressure.

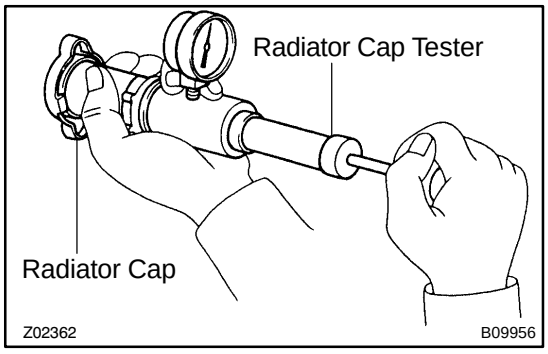

2. INSPECT RADIATOR CAP

NOTICE:

- **If the radiator cap has contaminations, always rinse it with water.**
- **Before using a radiator cap tester, wet the relief valve and pressure valve with engine coolant or water.**
- **When performing steps (a) and (b) below, keep the radiator cap tester at an angle of over 30˚C above the horizontal.**

(a) Using a radiator cap tester, pump the tester and measure the relief valve opening pressure.

Pump speed: 1 push/(3 seconds or more)

NOTICE:

Push the pump at a constant speed.

If air is not coming from the vacuum valve, replace the radiator cap.

(b) Pump the tester and measure the relief valve opening pressure.

Pump speed: 1 push within 1 second

NOTICE:

This pump speed is for the first pump only (in order to close the vacuum valve). After this, the pump speed can be reduced.

Standard opening pressure:
74 – 103 kPa (0.75 – 1.05 kgf/cm^2, 10.7 – 14.9 psi)
Minimum opening pressure:
59 kPa (0.6 kgf/cm^2, 8.5 psi)

HINT:

Use the tester's maximum reading as the opening pressure.

If the opening pressure is less than minimum, replace the radiator cap.

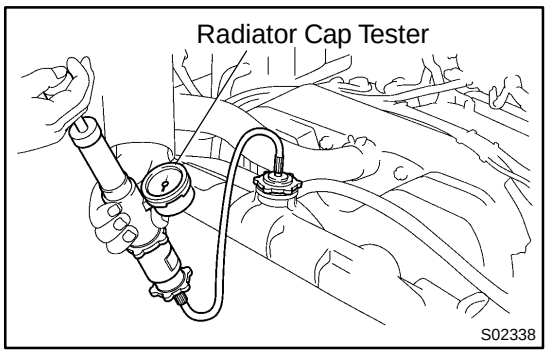

3. INSPECT COOLING SYSTEM FOR LEAKS

(a) Fill the radiator with coolant and attach a radiator cap tester.

(b) Warm up the engine.

(c) Pump it to 118 kPa (1.2 kgf/cm^2, 17.1 psi), and check that the pressure does not drop.

If the pressure drops, check the hoses, radiator or water pump for leaks.

If no external leaks are found, check the heater core, cylinder block and head.

4. REINSTALL RADIATOR CAP

NOTICE:

- **Clean the radiator cap housing before install the radiator cap.**
- **If the radiator cap has contaminations, always rinse it with water.**

CO0X9–01

REASSEMBLY

Reassembly is in the reverse order of disassembly (See page CO–18).

CO17M–02

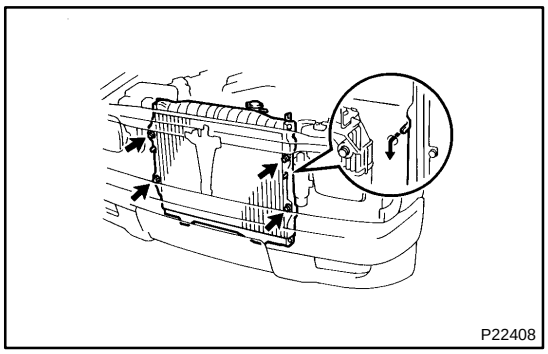

REMOVAL

1. **DRAIN ENGINE COOLANT**
2. **REMOVE RADIATOR GRILLE (See page BO–8)**
3. **DISCONNECT UPPER RADIATOR HOSE**
4. **DISCONNECT RADIATOR RESERVOIR HOSE**
5. **DISCONNECT LOWER RADIATOR HOSE**
6. **REMOVE RADIATOR NO.2 FAN SHROUD**
7. **A/T:**
   DISCONNECT OIL COOLER HOSES
8. **REMOVE RADIATOR**

Remove the 4 bolts and the radiator.

Torque: 12 N·m (120 kgf·cm, 8.7 ft·lbf)

HINT:

Insert the tabs of the radiator support through the radiator service holes.

THERMOSTAT

COMPONENTS

CO028–05

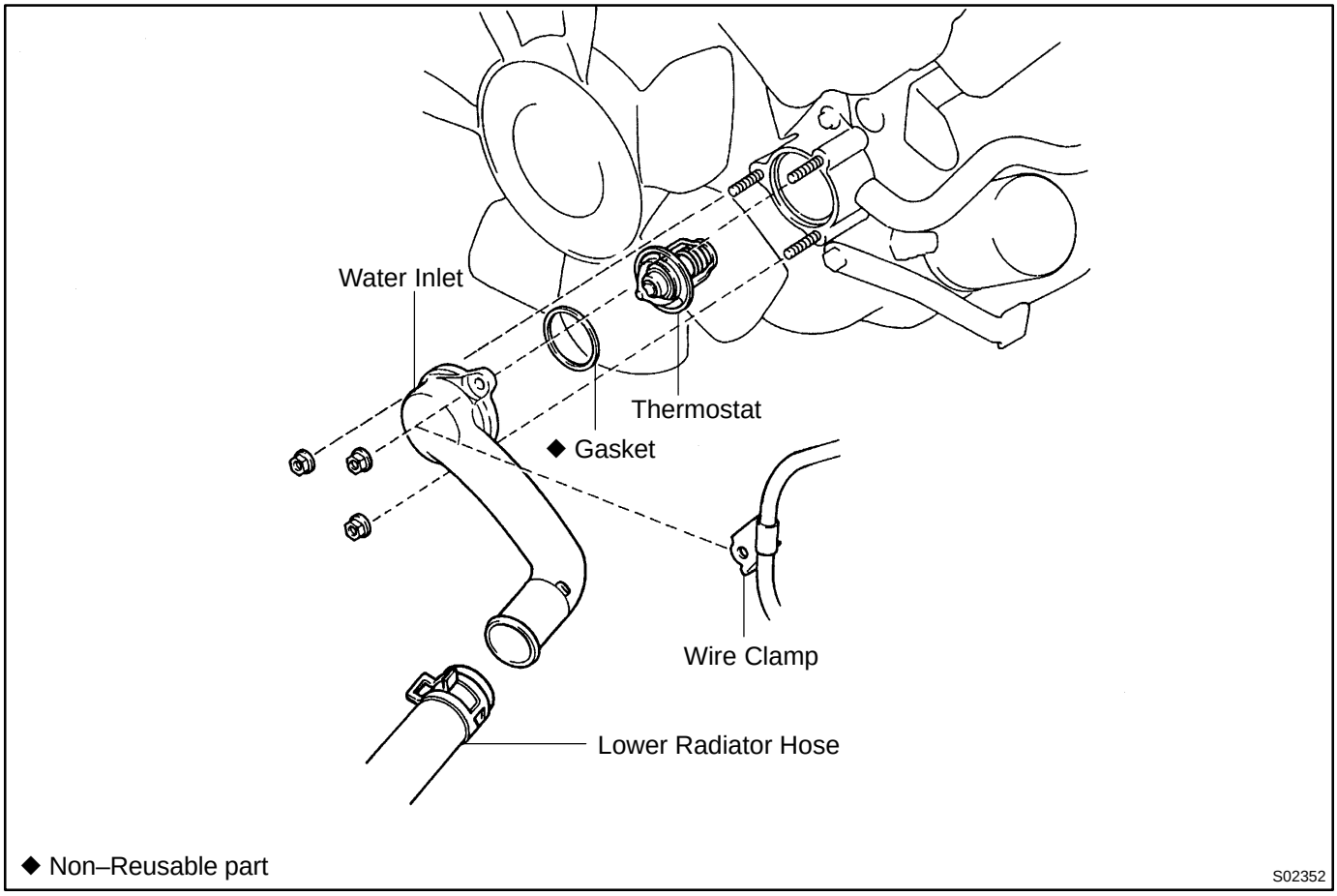

CO02A–04

INSPECTION

INSPECT THERMOSTAT

HINT:

Thermostat is numbered according to the valve opening temperature.

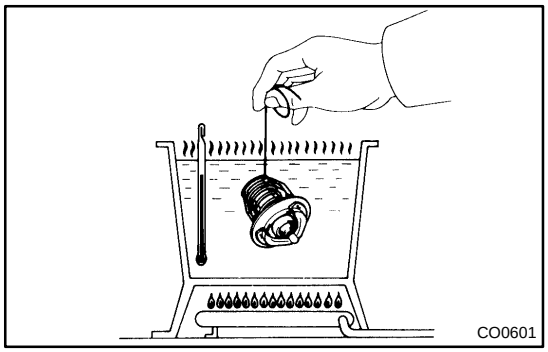

(a) Immerse the thermostat in water and gradually heat the water.

(b) Check the valve opening temperature.

Valve opening temperature: 80 – 84˚C (176 – 183˚F)

If the valve opening temperature is not as specified, replace the thermostat.

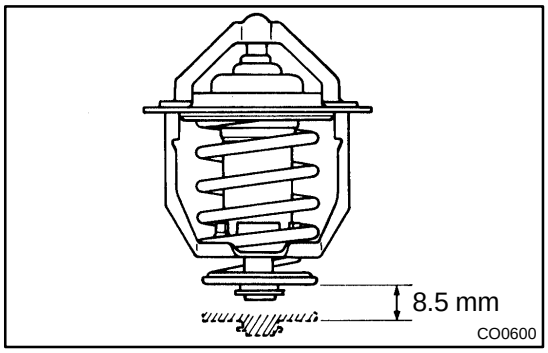

(c) Check the valve lift.

Valve lift: 8.5 mm (0.335 in.) or more at 95˚C (203˚F)

If the valve lift is not as specified, replace the thermostat.

(d) Check that the valve is fully closed when the thermostat is at low temperatures (below 40˚C (104˚F)).

If not closed, replace the thermostat.

CO02B–03

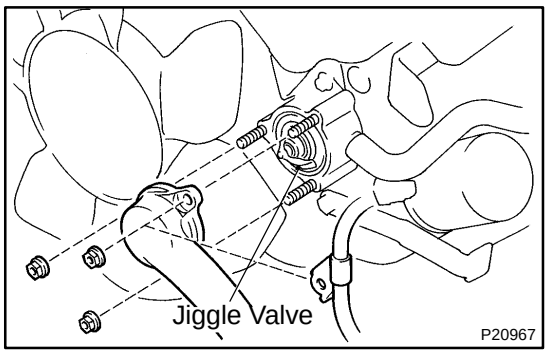

INSTALLATION

1. INSTALL THERMOSTAT

(a) Place a new gasket to the thermostat.

(b) Install the thermostat with the jiggle valve downward.

(c) Install the water inlet with the 3 nuts.

Torque: 20 N·m (200 kgf·cm, 14 ft·lbf)

2. CONNECT LOWER RADIATOR HOSE

3. FILL WITH ENGINE COOLANT

4. START ENGINE AND CHECK FOR LEAKS

CO029–02

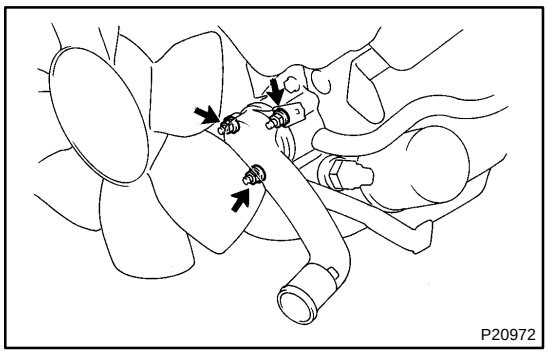

REMOVAL

1. DRAIN ENGINE COOLANT

2. DISCONNECT LOWER RADIATOR HOSE

3. REMOVE THERMOSTAT

(a) Remove the 3 nuts, water inlet and thermostat with gasket from the water pump.

(b) Remove the gasket from the thermostat.

WATER PUMP

COMPONENTS

CO024–05

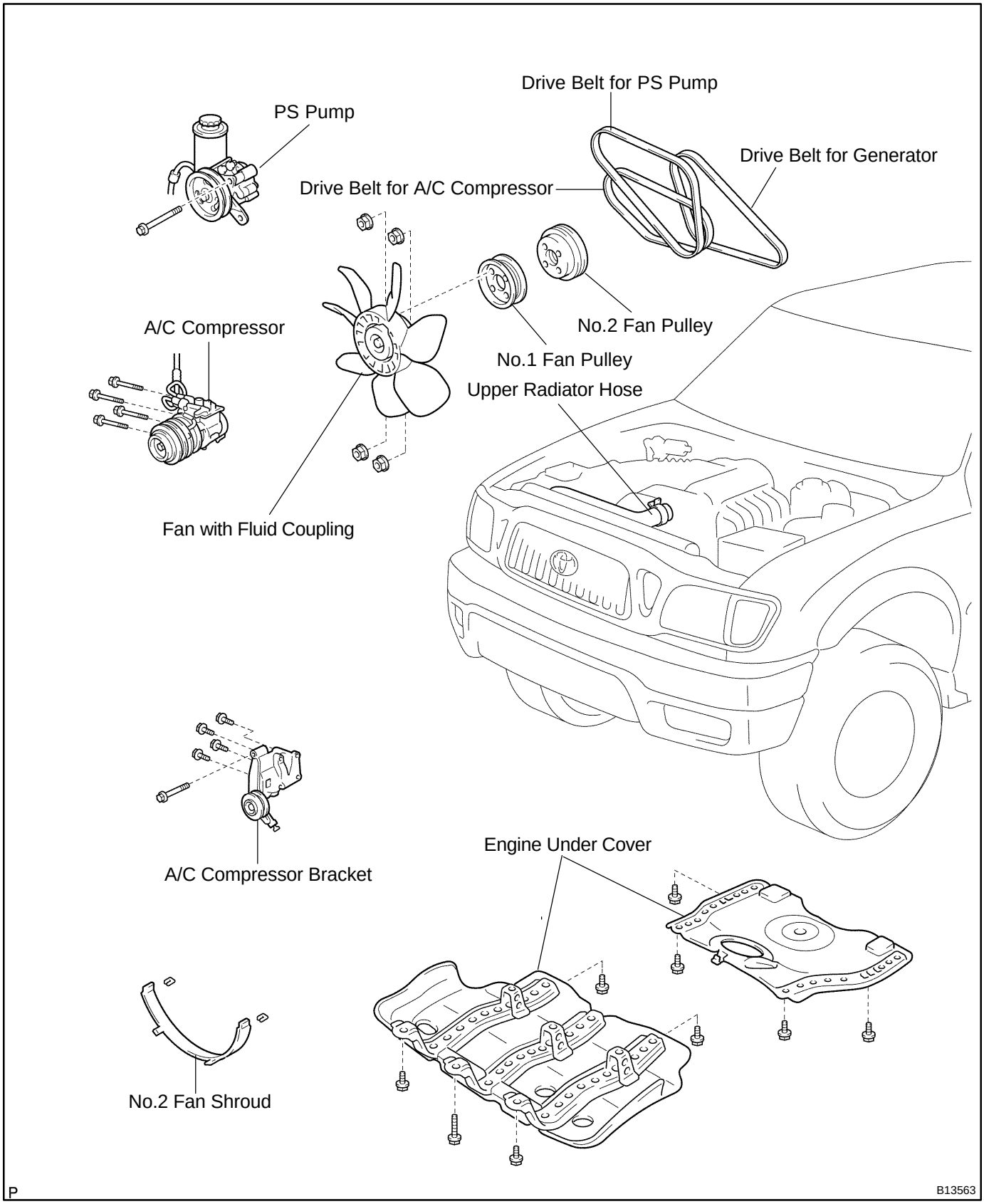

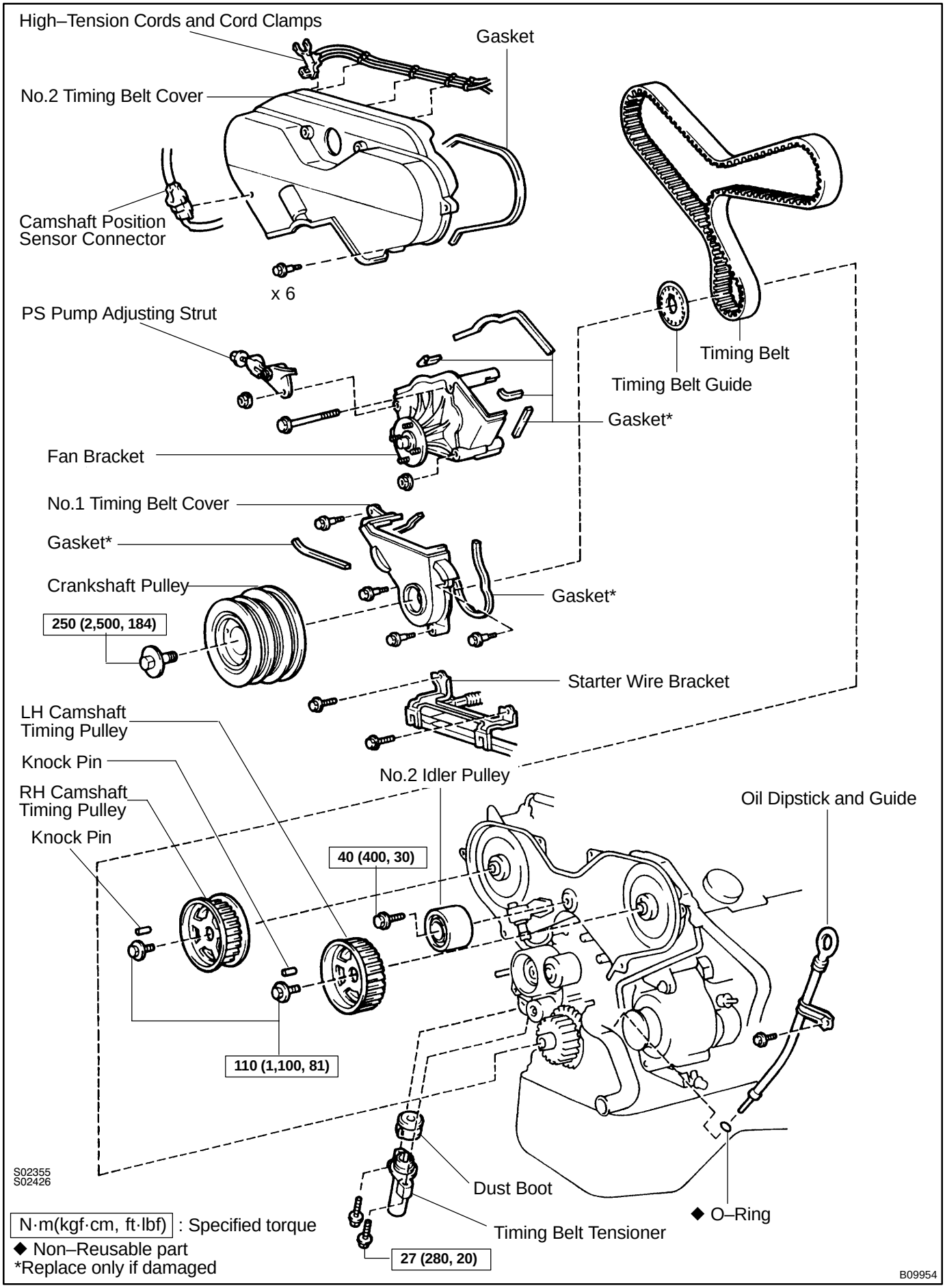
High–Tension Cords and Cord Clamps
Gasket
No.2 Timing Belt Cover
Camshaft Position Sensor Connector
x 6
PS Pump Adjusting Strut
Timing Belt
Timing Belt Guide
Gasket*
Fan Bracket
No.1 Timing Belt Cover
Gasket*
Crankshaft Pulley
Gasket*
250 (2,500, 184)
Starter Wire Bracket
LH Camshaft Timing Pulley
Knock Pin
No.2 Idler Pulley
RH Camshaft Timing Pulley
Knock Pin
Oil Dipstick and Guide
40 (400, 30)
110 (1,100, 81)
S02355
S02426
Dust Boot
◆ O–Ring
Timing Belt Tensioner
27 (280, 20)
N·m(kgf·cm, ft·lbf) : Specified torque
◆ Non–Reusable part
*Replace only if damaged
B09954

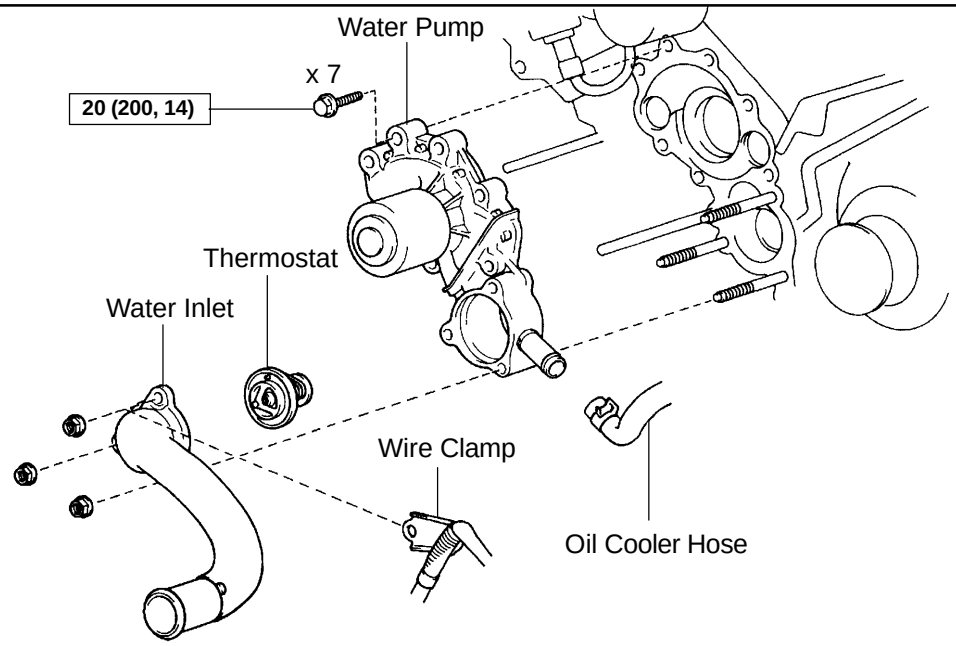

N·m(kgf·cm, ft·lbf) : Specified torque
◆ Non–Reusable part

S02351

CO026–03

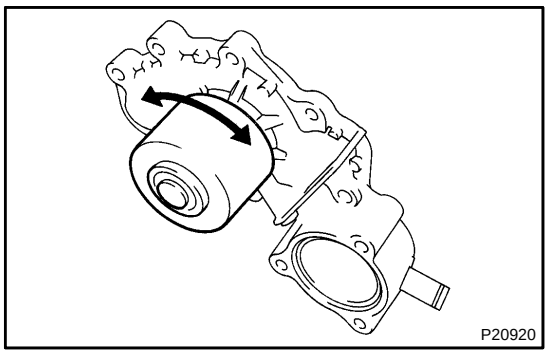

INSPECTION

1. INSPECT WATER PUMP

(a) Visually check the drain hole for coolant leakage.

If leakage is found, replace the water pump.

If engine coolant has leaked onto the timing belt, replace the timing belt.

(b) Turn the pulley, and check that the water pump bearing moves smoothly and quietly.

If necessary, replace the water pump.

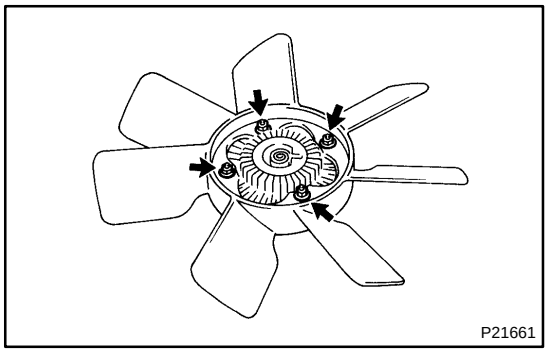

2. INSPECT FLUID COUPLING

(a) Remove the 4 nuts and fan from the fluid coupling.

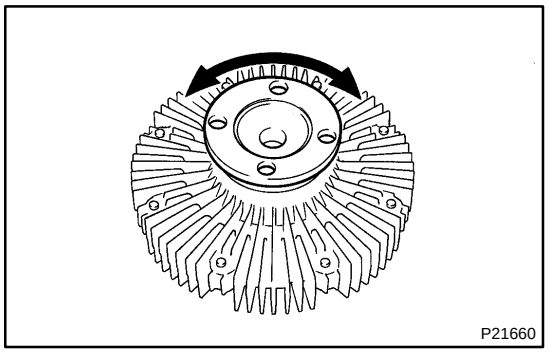

(b) Check that the fluid coupling is not damaged and that no silicon oil leaks.

If necessary, replace the fluid coupling.

(c) Reinstall the fan to the fluid coupling with the 4 nuts.

Torque: 7.4 N·m (75 kgf·cm, 65 in.·lbf)

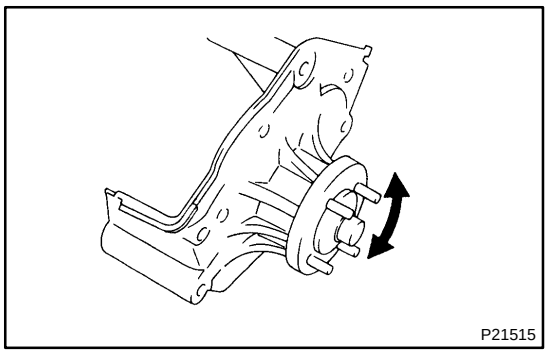

3. INSPECT FAN PULLEY BRACKET

Check the turning smoothness of the fan pulley.

If necessary, replace the pulley bracket.

4. INSPECT TIMING BELT COMPONENTS

(See page EM–17)

CO027–05

INSTALLATION

1. INSTALL WATER PUMP

(a) Remove any old packing (FIPG) material and be careful not to drop any oil on the contact surfaces of the water pump and cylinder block.

(1) Using a razor blade and gasket scraper, remove all the old packing (FIPG) material from the gasket surfaces and sealing groove.

(2) Thoroughly clean all components to remove all the loose material.

(3) Using a non–residue solvent, clean both sealing surfaces.

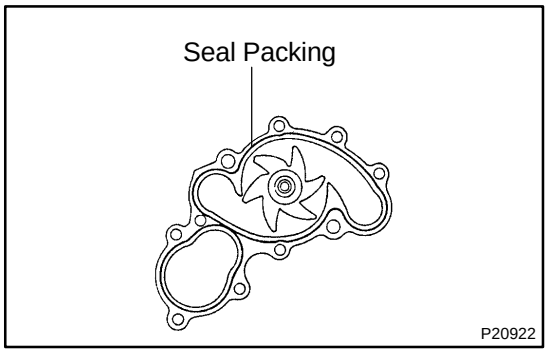

(b) Apply seal packing to the water pump groove as shown in the illustration.

Seal packing: Part No. 08826–00100 or equivalent

- Install a nozzle that has been cut to a 2 – 3 mm (0.08 – 0.12 in.) opening.
- Parts must be assembled within 5 minutes of application. Otherwise the material must be removed and reapplied.
- Immediately remove nozzle from the tube and reinstall cap.

(c) Install the water pump with the 7 bolts.

Torque: 20 N·m (200 kgf·cm, 14 ft·lbf)

2. CONNECT NO.2 OIL COOLER HOSE

3. INSTALL THERMOSTAT AND WATER INLET (See page CO–12)

4. INSTALL TIMING BELT (See page EM–19)

CO025–03

REMOVAL

1. **REMOVE TIMING BELT (See page EM–13)**
2. **REMOVE WATER INLET AND THERMOSTAT**
3. **DISCONNECT NO.2 OIL COOLER HOSE FROM WATER PUMP**

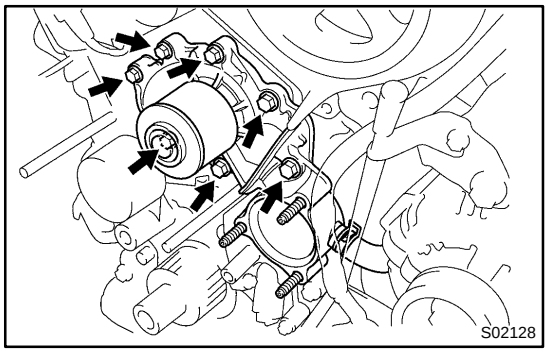

4. **REMOVE WATER PUMP**

(a) Remove the 7 bolts.

(b) Pry out the water pump.

DI19E–06

ABS Warning Light Circuit

CIRCUIT DESCRIPTION

If the ECU detects trouble, it lights the ABS warning light while at the same time prohibiting ABS control. At this time, the ECU records a DTC in memory.
After removing the short pin of the DLC3, connect terminals Tc and CG of the DLC3 to make the ABS warning light blink and output the DTC.

WIRING DIAGRAM

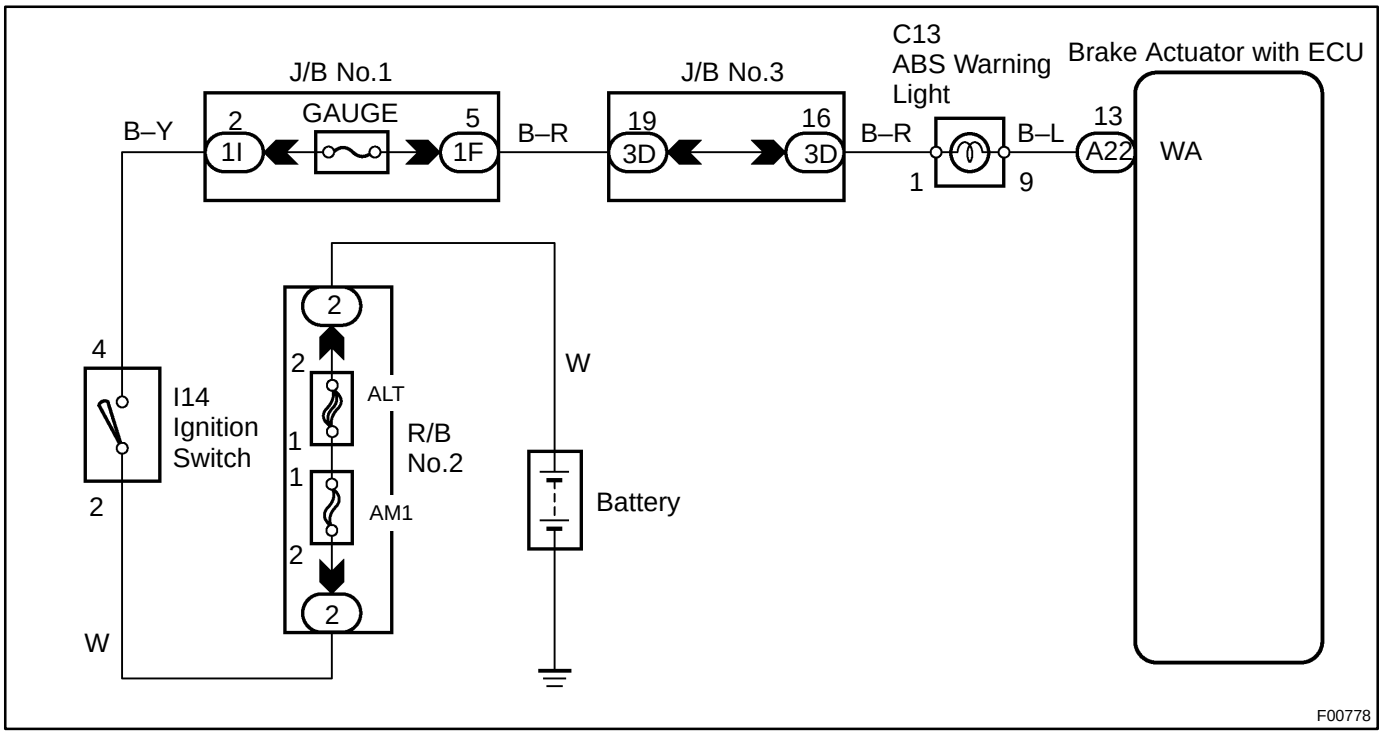

INSPECTION PROCEDURE

Troubleshooting in accordance with the chart below for each trouble symptom.

ABS warning light does not light up	Go to step 1
ABS warning light remains on	Go to step 2

1	**Check ABS warning light.**

See Combination Meter Troubleshooting on page BE–2.

NG → **Repair bulb or combination meter assembly.**

OK

Check for open in harness and connector between GAUGE fuse and skid control ECU (See page IN–28).

2	**Is DTC output?**

Check DTC on page DI–540.

YES → **Repair circuit indicated by the code output.**

NO

3	**Check for short in harness and connector between GAUGE fuse and skid control ECU (See page IN–28).**

NG → **Repair or replace harness or connector.**

OK

Check and repair brake actuator ASSY.

DIB1D–01

DTC	Always ON	Malfunction in ECU

CIRCUIT DESCRIPTION

DTC No.	DTC Detecting Condition	Trouble Area
Always ON	Either of the following 1. through 3. is detected: 1. The ECU connectors are OFF from the ECU. 2. There is a malfunction in the ECU internal circuit. 3. The voltage of terminal IG1 is more than 18.5 V.	• Battery • Charging system • Power source circuit • Skid control ECU • Wire harness

HINT:
There is a case that hand–held tester cannot be used when ECU is abnormal.

WIRING DIAGRAM

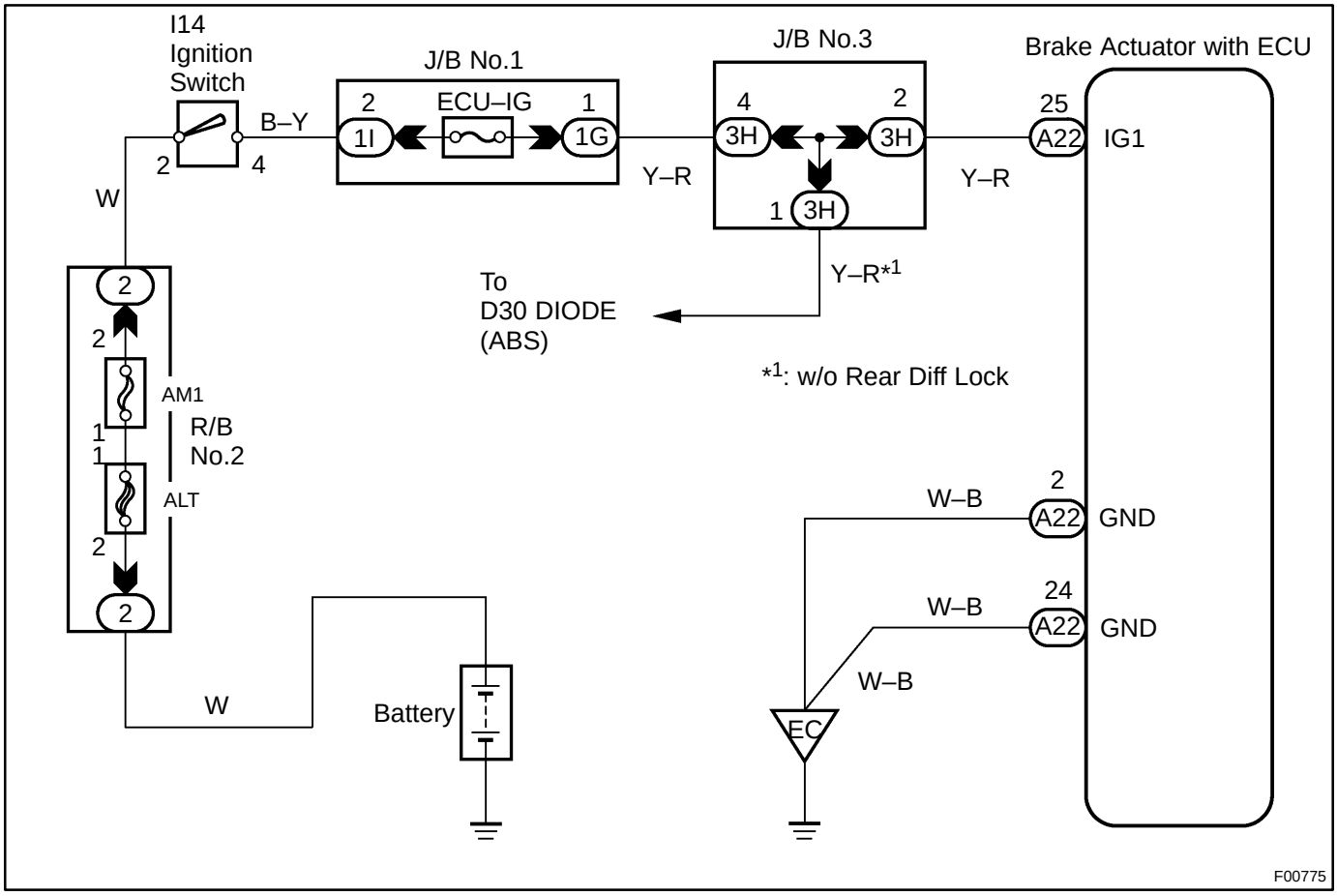

INSPECTION PROCEDURE

1	**Check that the ECU connectors are securely connected to the ECU.**

NO → **Connect the connector to the ECU.**

YES

2	**Is DTC output?**

Check DTC on page DI–534.

YES → **Repair circuit indicated by the output code .**

NO

3	**Is normal code displayed?**

YES → **Check ABS solenoid relay. Check for short circuit in harness and connector between ABS solenoid relay and DLC3 (See page IN–28).**

NO

4	**Does ABS warning light go off?**

YES → **Check for open or short circuit in harness and connector between ECU–IG fuse and skid control ECU (See page IN–28).**

NO

5	Check battery positive voltage.

CHECK:
Check the battery positive voltage.
OK:
Voltage: 10 – 14 V

NG → **Check and repair the charging system.**

OK

6	Check operation of the ABS warning light.

In case of using hand–held tester:
PREPARATION:
(a) Connect the hand–held tester to the DLC3.
(b) Turn the ignition switch ON and push the hand–held tester main switch ON.
(c) Select the ACTIVE TEST mode on the hand–held tester.
CHECK:
Check that ”ON” and ”OFF” of the ABS warning light can be shown on the combination meter by the hand–held tester.
In case of not using hand–held tester:
PREPARATION:
(a) Turn the ignition switch OFF.
(b) Disconnect the connector from the skid control ECU.
(c) Turn the ignition switch ON.
CHECK:
Check the ABS warning light goes OFF.

OK → **Check and replace brake actuator ASSY.**

NG

Check for short circuit in harness and connector between combination meter and skid control ECU (See page IN–28).
Check ABS solenoid relay circuit (See page DI–558).

DIB16–01

DTC	C1237 / 37	Tires of Different Size

CIRCUIT DESCRIPTION

DTC No.	DTC Detecting Condition	Trouble Area
C1237 / 37	Driving at more than 30 km/h (19 mph) for more than 60 seconds with 1 or 2 tires of different size.	• Tire size • Skid control ECU

INSPECTION PROCEDURE

1	**Check tire size.**

NG → **Replace tires so that all 4 tires are of the same size.**

OK

Check and replace brake actuator ASSY.

DIB17–01

DTC	C1241 / 41	IG Power Source Circuit

CIRCUIT DESCRIPTION

This is the power source for the ECU, hence the actuators.

DTC No.	DTC Detecting Condition	Trouble Area
C1241 / 41	Vehicle speed is 3 km/h (1.9 mph) or more and voltage of ECU terminal IG1 remains at more than 17 V or below 9.5 V for more than 10 sec.	• Battery • IC regulator • Open or short in power source circuit • Skid control ECU • Wire harness

Fail safe function:
If trouble occurs in the power source circuit, the ECU cuts off current to the ABS control (solenoid) relay and prohibits ABS control.

WIRING DIAGRAM

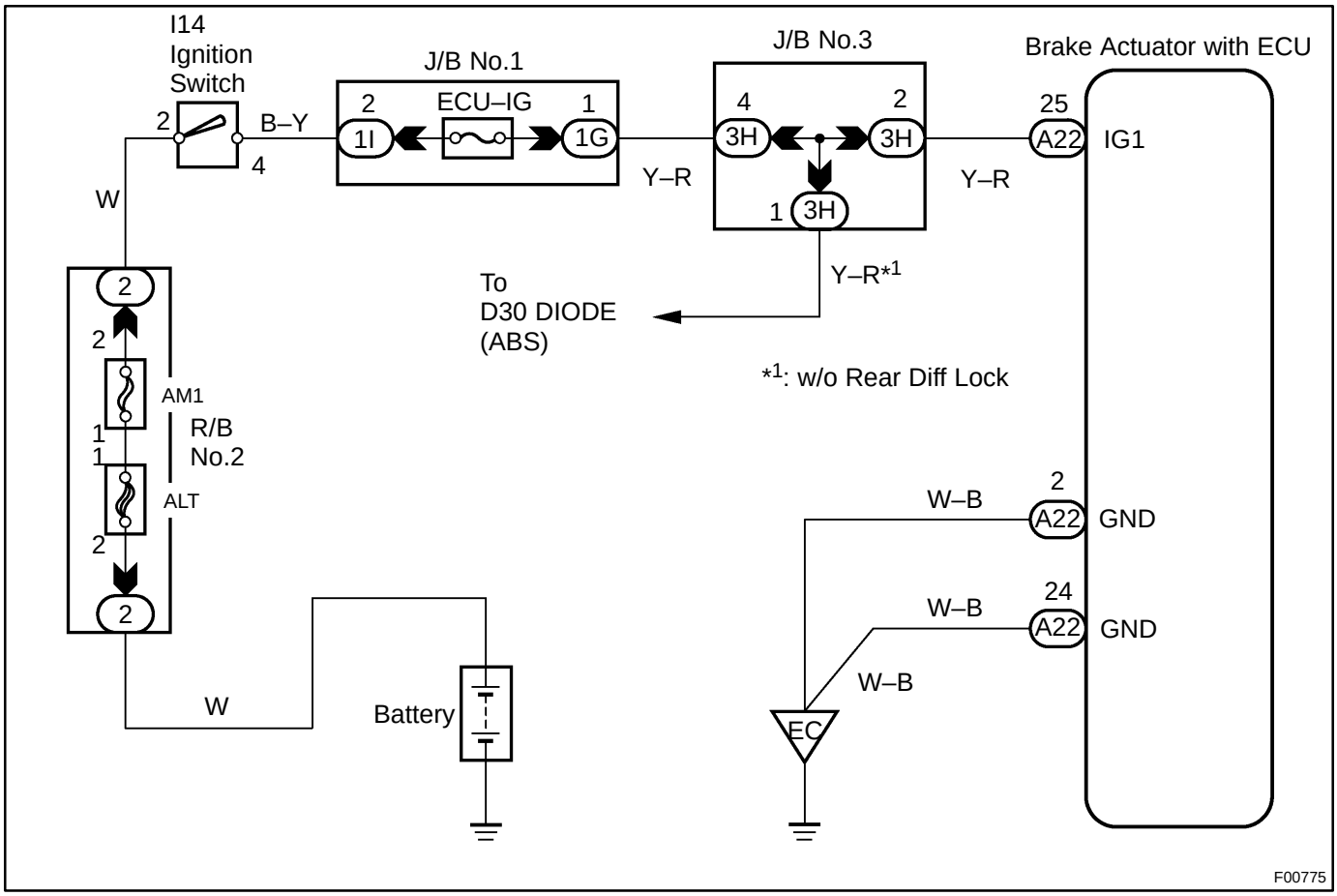

INSPECTION PROCEDURE

1	**Check battery positive voltage.**

OK:

Voltage: 10 – 14 V

NG → **Check and repair the charging system.**

OK

2	**Check voltage of the ECU IG power source.**

In case of using hand–held tester:

PREPARATION:

(a) Connect the hand–held tester to the DLC3.
(b) Turn the ignition switch ON and push the hand–held tester main switch ON.
(c) Select the DATA LIST mode on the hand–held tester.

CHECK:

Check the voltage condition output from the ECU displayed on the hand–held tester.

OK:

"Normal" is displayed.

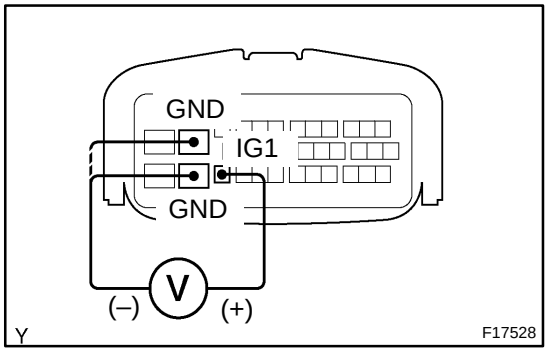

In case of not using hand–held tester:

PREPARATION:

Disconnect skid control ECU connector.

CHECK:

(a) Turn the ignition switch ON.
(b) Measure voltage between terminals IG1 (25) and GND (2, 24) of skid control ECU harness side connector.

OK:

Voltage: 10 – 14 V

OK → **Check and replace brake actuator ASSY.**

NG

3	Check continuity between terminals GND of skid control ECU connector and body ground.

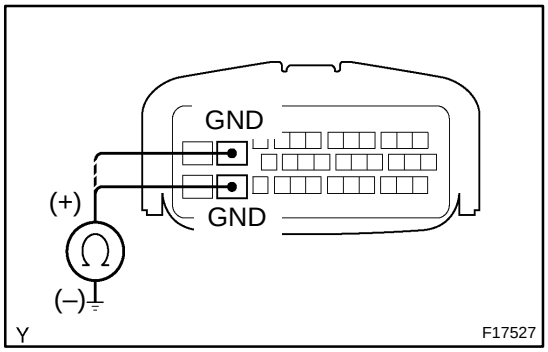

CHECK:
Measure resistance between terminals GND (2, 24) of skid control ECU harness side connector and body ground.
OK:
Resistance: 1 Ω or less

NG → **Repair or replace harness or connector.**

OK

4	Check for open circuit in harness and connector between skid control ECU and battery (See page IN–28).

NG → **Repair or replace harness or connector.**

OK

5	Check ECU–IG fuse.

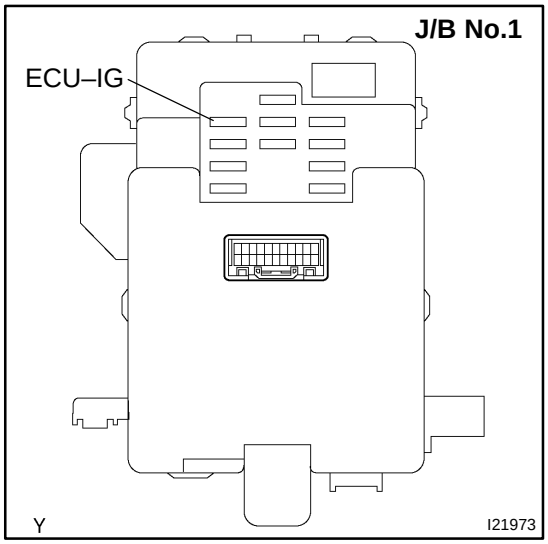

PREPARATION:
Remove ECU–IG fuse from J/B No.1.
CHECK:
Check continuity of ECU–IG fuse.
OK:
Continuity

NG → **Check for short in all the harness and components connected to ECU–IG fuse (See attached wiring diagram).**

OK

Check and replace brake actuator ASSY.

DIB18–01

DTC	C1243 / 43, C1245 / 45	Malfunction in Deceleration Sensor

CIRCUIT DESCRIPTION

DTC No.	DTC Detecting Condition	Trouble Area
C1243 / 43	While vehicle speed becomes 0 km/h (0 mph) from 30 km/h (18 mph), and the condition that GL1 signals of ECU terminals do not change 40 mV or less continues in a sequence 16 times.	• ABS deceleration sensor • Wire harness for deceleration sensor system
C1245 / 45	At the vehicle speed of 30 km/h (18 mph) or more, and the condition that the difference between acceleration and deceleration values of computation from ABS deceleration sensor and vehicle speed becomes more than 0.35 G continues for 60 sec. or more.	

WIRING DIAGRAM

See page DI–567.

INSPECTION PROCEDURE

HINT:

Start the inspection from step1 in case of using the hand–held tester and start from step 2 in case of not using the hand–held tester.

1	Check output value of the deceleration sensor.

PREPARATION:

(a) Connect the hand–held tester to the DLC3.
(b) Turn the ignition switch ON and push the hand–held tester main switch ON.
(c) Select the DATA LIST mode on the hand–held tester.

CHECK:

Check that the deceleration value of the deceleration sensor displayed on the hand–held tester is changing when tilting the vehicle.

OK:

Deceleration value must be changing.

OK → **Check and replace brake actuator ASSY.**

NG

2	Check ABS deceleration sensor (See page DI–534).

NG → **Replace ABS deceleration sensor.**

OK

3	**Check for open or short circuit in harness and connector between deceleration sensor and skid control ECU (See page IN–28).**

NG → **Repair or replace harness or connector.**

OK

Check and replace brake actuator ASSY.

DIB19–01

DTC	C1244 / 44	Deceleration Sensor Circuit

CIRCUIT DESCRIPTION

This sensor detects deceleration on the vehicle. The sensor signal is used in ABS control. If the sensor functions abnormally, the ABS warning light comes on.

DTC No.	DTC Detecting Condition	Trouble Area
C1244 / 44	Either of the following 1., 2. or 3. is detected: 1. The condition that ECU terminals GL1 values are –1.5 G or less or 1.5 G or more continues for 1.2 sec. or more. 2. The condition that the ABS deceleration sensor terminal VGS voltage is 4.4 V or less or 5.6 V or more continues for 1.2 sec. or more. 3. ABS deceleration sensor signal momentary open occurs for 7 times or more.	• ABS deceleration sensor • Deceleration sensor circuit • Wire harness

WIRING DIAGRAM

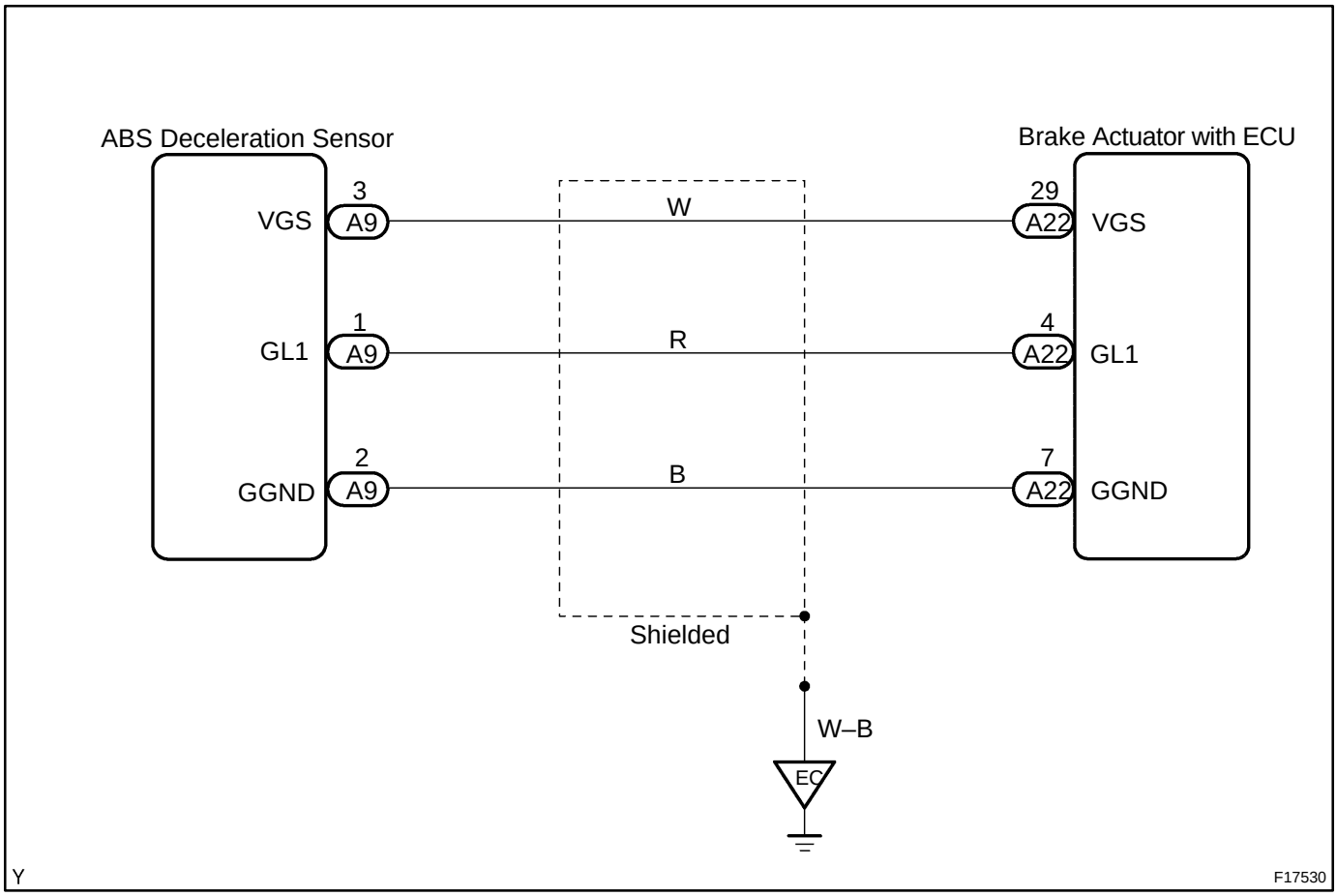

INSPECTION PROCEDURE

1	Check for open and short circuit in harness and connector between ABS deceleration sensor and skid control ECU (See page IN–28).

NG → Repair or replace harness or connector.

OK ↓

2	Check ABS deceleration sensor (See page DI–534).

NG → Replace ABS deceleration sensor.

OK ↓

Check and replace brake actuator ASSY.

DIB1A–01

DTC	C1248 / 48	Rear Differential Lock circuit

CIRCUIT DESCRIPTION

DTC No.	DTC Detecting Condition	Trouble Area
C1248 / 48	Open or short circuit in rear differential lock circuit. Rear differential is locking.	• Rear differential lock • Skid control ECU • Wire harness

WIRING DIAGRAM

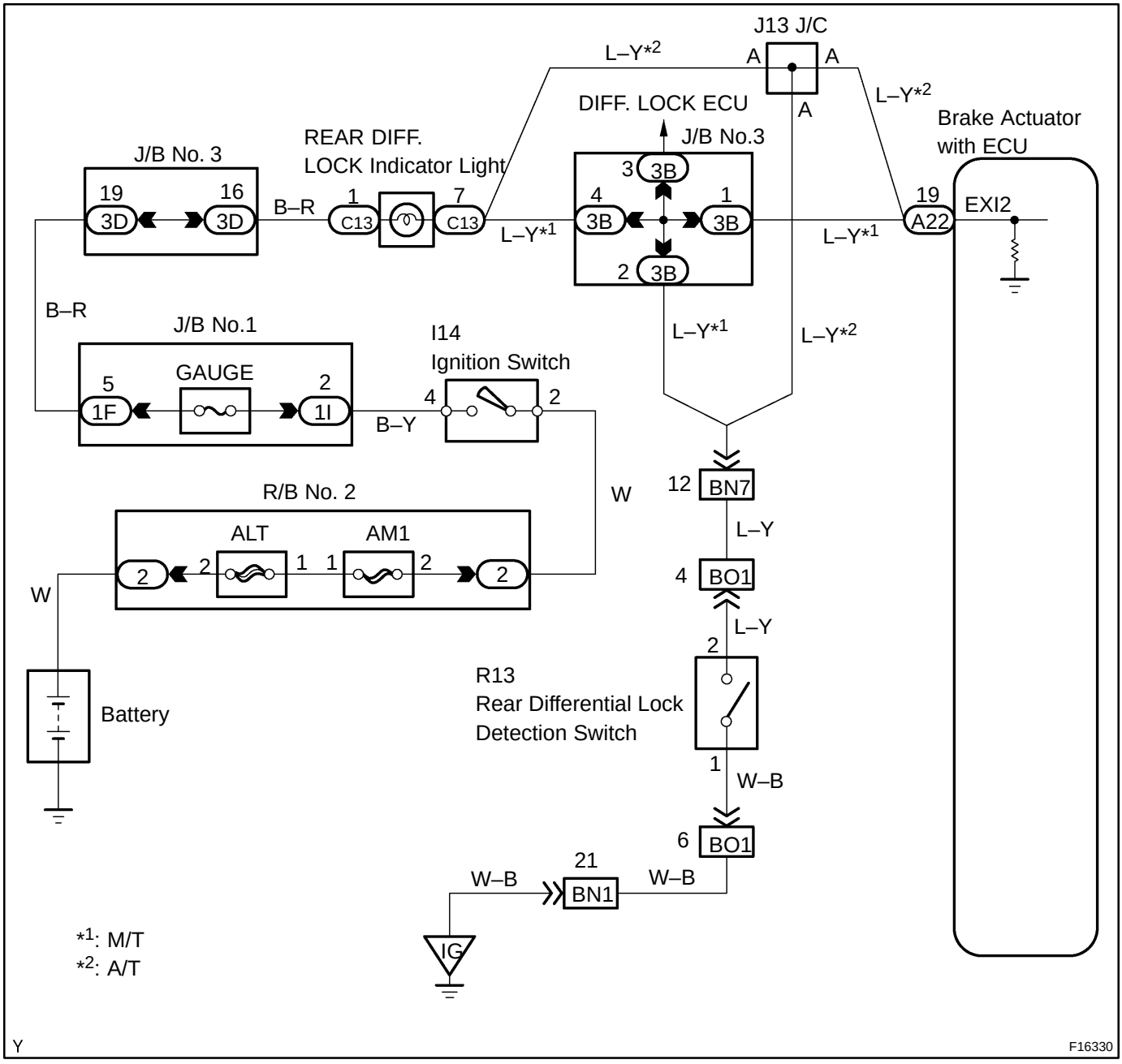

INSPECTION PROCEDURE

HINT:
Rear differential lock switch is OFF.

1	**Check the rear differential lock is free (See page SA–199).**

NG → **Repair the rear differential lock system.**

OK

2	**Is DTC output?**

Check DTC on page DI–540.

NO → **Normal.**

YES

3	**Check that REAR DIFF. LOCK indicator light does not go off.**

NG → **Go to step 6.**

OK

4	**Check that bulb for REAR DIFF. LOCK indicator light is not burnt out.**

NG → **Replace indicator light.**

OK

5	**Check for open in harness and connector between battery and REAR DIFF. LOCK indicator light, REAR DIFF. LOCK indicator light and skid control ECU (See page IN–28).**

NG → **Repair or replace harness or connector.**

OK

6	**Check for short in harness and connector between REAR DIFF. LOCK indicator light and ABS ECU (See page IN–28).**

NG → **Repair or replace harness or connector.**

OK

Check and replace brake actuator ASSY.

DIB1B–01

DTC	C1249 / 49	Stop Light Switch Circuit

CIRCUIT DESCRIPTION

DTC No.	Detection Item	Trouble Area
C1249 / 49	This stop light switch senses whether the brake pedal is depressed or released, and sends the signal to the ECU.	• Stop light switch • Skid control ECU • Wire harness

WIRING DIAGRAM

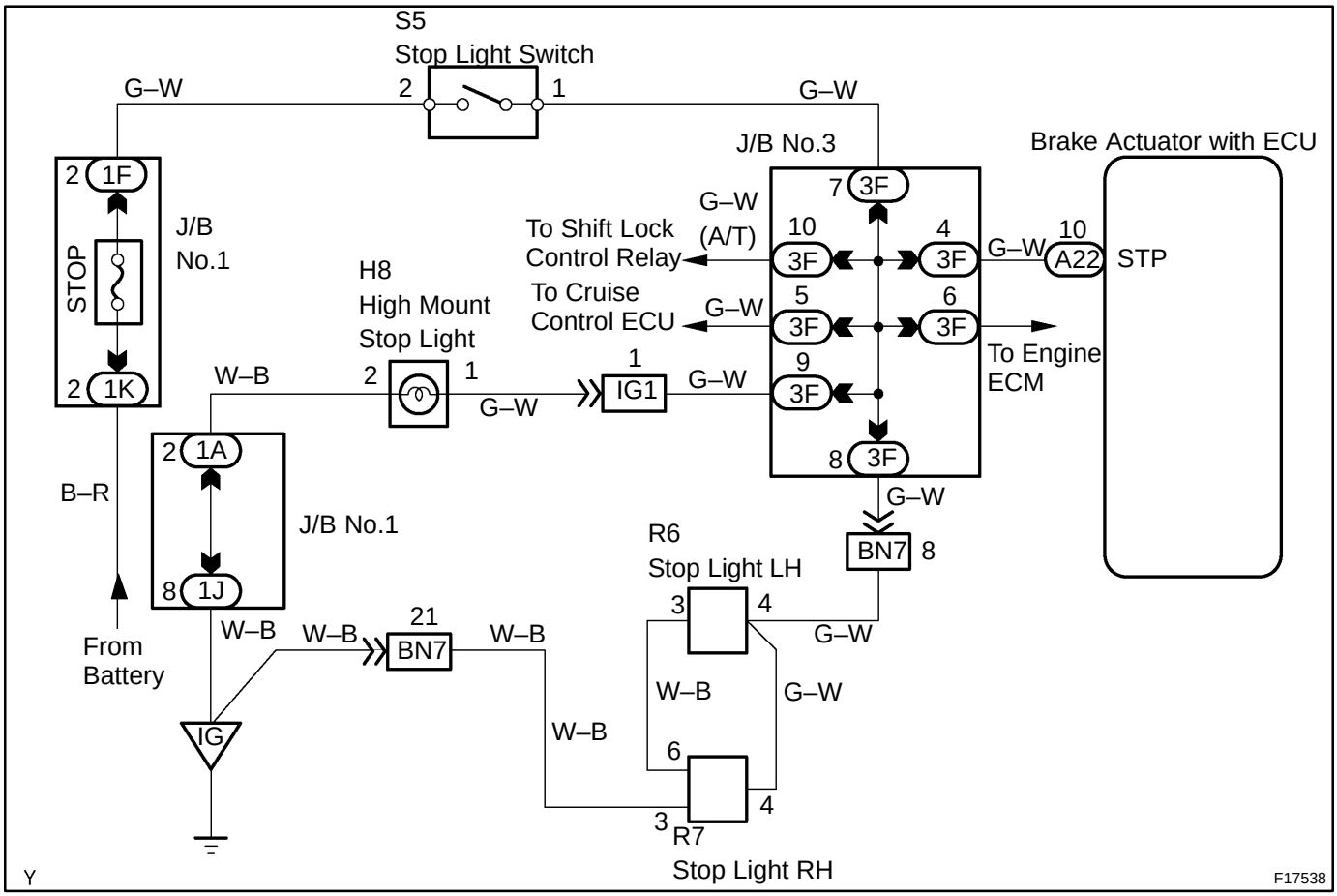

INSPECTION PROCEDURE

1	**Check operation of stop light.**

CHECK:

Check that stop light lights up when brake pedal is depressed and lights off when brake pedal is released.

NG → **Repair stop light circuit (See page BE–2).**

OK

2	**Check voltage between terminal STP of skid control ECU and body ground.**

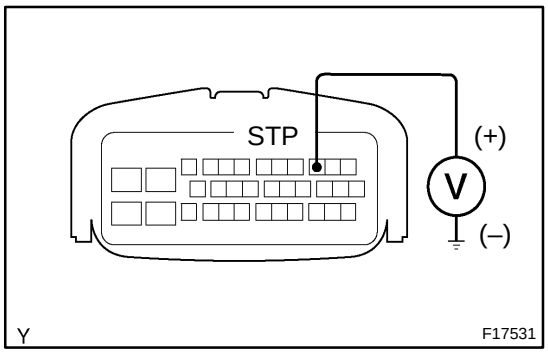

PREPARATION:
Disconnect skid control ECU connector.
CHECK:
Measure voltage between terminal STP (10) of skid control ECU harness side connector and body ground when brake pedal is depressed.
OK:
Voltage: 8 – 14 V

OK	**Proceed to next circuit inspection shown on problem symptoms table (See page DI–545).**

NG

3	**Check for open in harness and connector between skid control ECU and stop light switch (See page IN–28).**

NG	**Repair or replace harness or connector.**

OK

Check and replace brake actuator ASSY.

DIB1C–01

DTC	C1251 / 51	ABS Pump Motor Lock

CIRCUIT DESCRIPTION

DTC No.	DTC Detecting Condition	Trouble Area
C1251 / 51	ABS actuator pump motor is not operating normally during initial check.	ABS pump motor • Wire harness

WIRING DIAGRAM

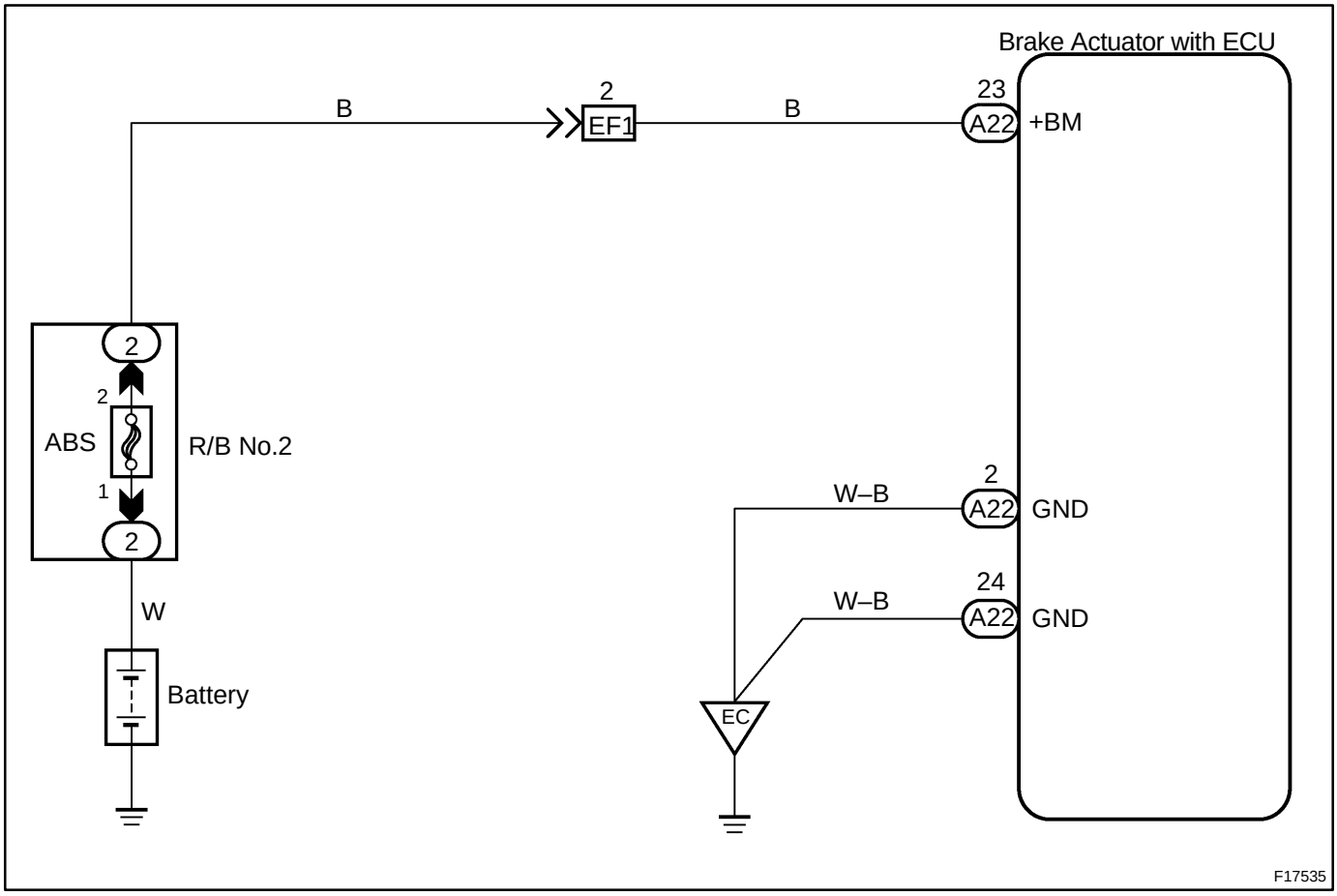

INSPECTION PROCEDURE

HINT:

Start the inspection from step 1 in case of using the hand–held tester and start from step 2 in case of not using hand–held tester.

1	**Check output value of the ABS pump motor.**

PREPARATION:

(a) Connect the hand–held tester to the DLC3.
(b) Turn the ignition switch ON and push the hand–held tester main switch ON.
(c) Select the DATA LIST mode on the hand–held tester.

CHECK:

Check the operation sound of the ABS pump motor when operating it with the hand–held tester.

OK:

The operation sound of the ABS pump motor should be heard.

OK → **Check and replace brake actuator ASSY.**

NG

2	**Check voltage between terminals +BM and GND of skid control ECU.**

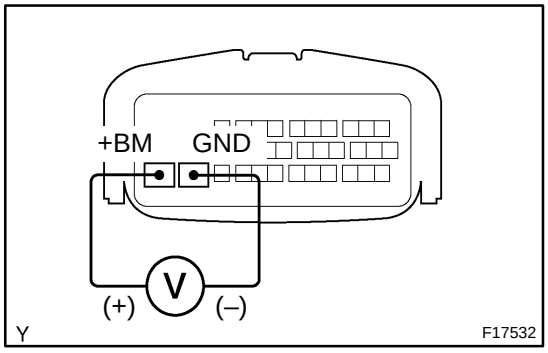

PREPARATION:

Disconnect the skid control ECU connector.

CHECK:

Measure the voltage between terminals +BM (23) and GND (24) of skid control ECU harness side connector.

OK:

Voltage: 10 – 14 V

NG → **Repair or replace harness or connector.**

OK

Check and replace brake actuator ASSY.

DI04B–22

Check for Fluid Leakage

Check for fluid leakage from actuator or hydraulic lines.

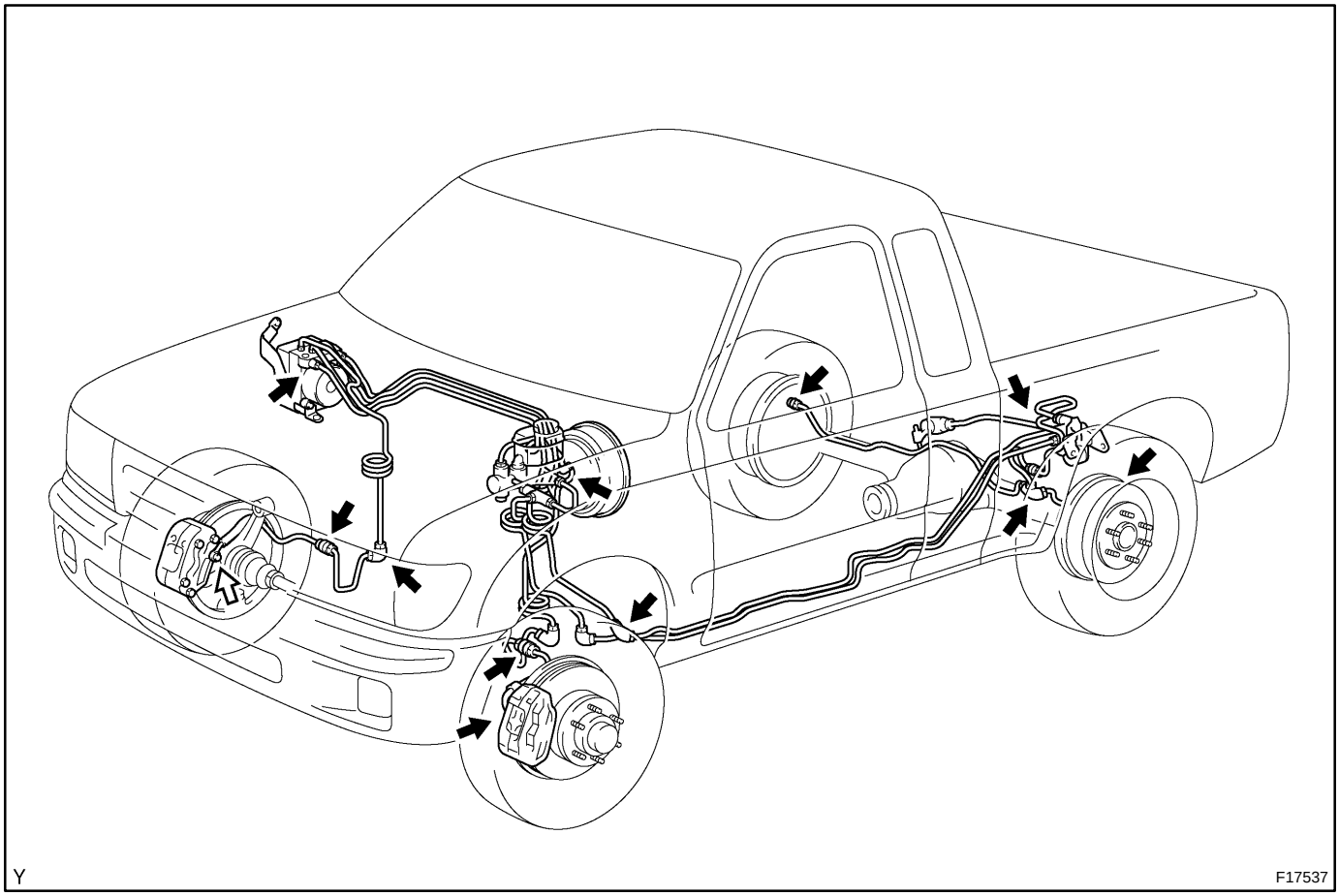

DIB12–01

CIRCUIT INSPECTION

DTC	C0200 / 31 – C0215 / 34	Speed Sensor Circuit

DTC	C1235 / 35, C1236 / 36	Foreign Matter is Attached on Tip

DTC	C1238 / 38, C1239 / 39	Foreign Matter is Attached on Tip

CIRCUIT DESCRIPTION

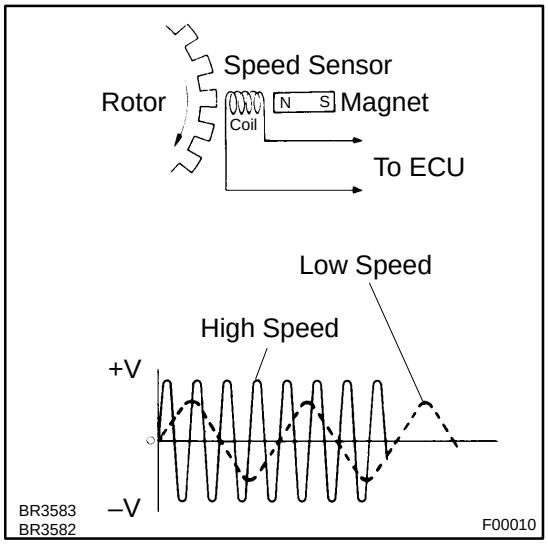

The speed sensor detects wheel speed and sends the appropriate signals to the ECU. These signals are used for control of the ABS control system. The front and rear rotors each have 48 serrations.

When the rotors rotate, the magnetic field emitted by the permanent magnet in the speed sensor generates an AC voltage. Since the frequency of this AC voltage changes in direct proportion to the speed of the rotor, the frequency is used by the ECU to detect the speed of each wheel.

DTC No.	DTC Detecting Condition	Trouble Area
C0200 / 31 C0205 / 32 C0210 / 33 C0215 / 34	Detection of any of conditions 1. through 4.: 1. At vehicle speed of 12 km/h (6 mph) or more, pulses are not input for 30 sec. 2. Momentary interruption of the speed sensor signal occurs at least 7 times in the time between switching the ignition switch ON and switching it OFF. 3. Continuous noise occurs into the speed sensor signals with the vehicle speed at 20 km/h (12 mph) or more. 4. The condition that the speed sensor signal circuit is open continues for 0.6 sec. or more.	• Right front, left front, right rear and left rear speed sensor • Each speed sensor circuit • Speed sensor rotor • Wire harness
C1235 / 35 C1236 / 36 C1238 / 38 C1239 / 39	At the vehicle speed of 20 km/h (12 mph) or more the condition that noise is included in the speed sensor signal continues for 5 sec. or more.	• Right front, left front, right rear and left rear speed sensor • Speed sensor rotor • Wire harness

HINT:

DTC No. C0200 / 31 and C1235 / 35 is for the right front speed sensor.
DTC No. C0205 / 32 and C1236 / 36 is for the left front speed sensor.
DTC No. C0210 / 33 and C1238 / 38 is for the right rear speed sensor.
DTC No. C0215 / 34 and C1239 / 39 is for the left rear speed sensor.

WIRING DIAGRAM

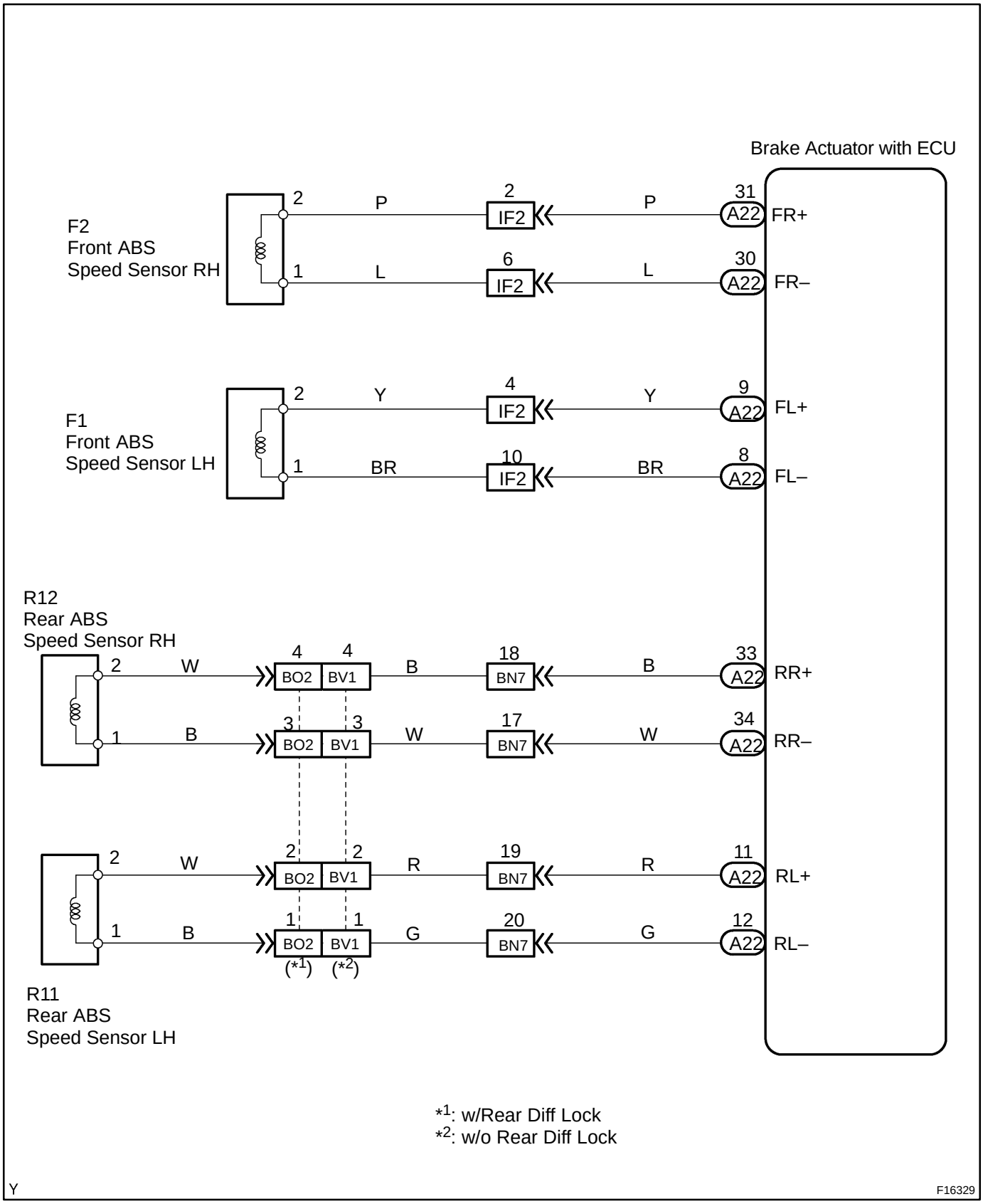

INSPECTION PROCEDURE

HINT:

Start the inspection from step 1 in case of using the hand–held tester and start from step 2 in case of not using the hand–held tester.

1	**Check output value of speed sensor.**

PREPARATION:

(a) Connect the hand–held tester to the DLC3.
(b) Turn the ignition switch ON and push the hand–held tester main switch ON.
(c) Select the DATA LIST mode on the hand–held tester.

CHECK:

Check that there is no difference between the speed value output from the speed sensor displayed on the hand–held tester and the speed value displayed on the speedometer when driving the vehicle.

OK:

There is almost no difference from the displayed speed value.

HINT:

There is tolerance of ± 10 % in the speedometer indication.

OK → **Check and replace brake actuator ASSY.**

NG

2	Check speed sensor.

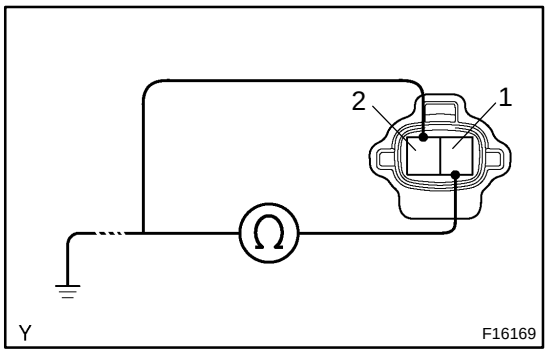

Front:

PREPARATION:

(a) Make sure that there is no looseness at the connector lock part and connecting part of the connector.

(b) Disconnect the speed sensor connector.

CHECK:

Measure resistance between terminals 1 and 2 of speed sensor connector.

OK:

Resistance: 0.9 – 1.2 kΩ

CHECK:

Measure resistance between terminal 1 or 2 of speed sensor connector and body ground.

OK:

Resistance: 1 MΩ or higher

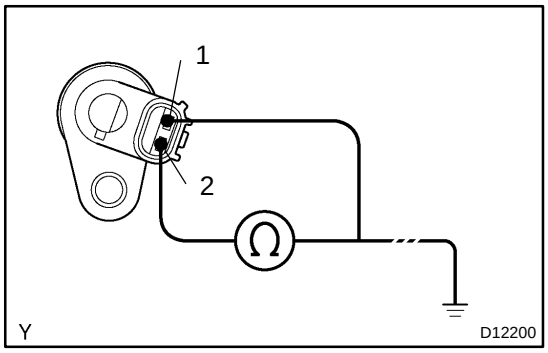

Rear:

PREPARATION:

(a) Make sure that there is no looseness at the connector lock part and connecting part of the connector.

(b) Disconnect the speed sensor connector.

CHECK:

Measure resistance between terminals 1 and 2 of speed sensor connector.

OK:

Resistance: 0.9 – 1.3 kΩ

CHECK:

Measure resistance between terminal 1 or 2 of speed sensor connector and body ground.

OK:

Resistance: 1 MΩ or higher

NG → **Replace speed sensor.**

NOTICE:

Check the speed sensor signal last (See page DI–534).

OK

3	**Check for open and short circuit in harness and connector between each speed sensor and skid control ECU (See page IN–28).**

NG → **Repair or replace harness or connector.**

OK

4	**Check sensor installation.**

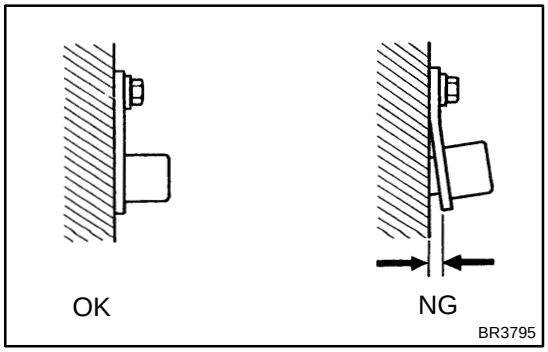

CHECK:
Check the speed sensor installation.
OK:

The installation bolt is tightened properly and there is no clearance between the sensor and front steering knuckle or rear axle carrier.
Torque: 8.0 N·m (82 kgf·cm, 71 in.·lbf)

NG → **Replace speed sensor.**

NOTICE:
Check the speed sensor signal last (See page DI–534).

OK

5	**Check speed sensor and sensor rotor serrations.**

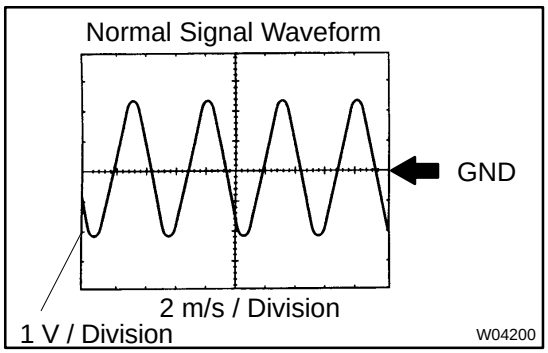

(REFERENCE) INSPECTION USING OSCILLOSCOPE
PREPARATION:
(a) Remove the skid control ECU with connectors still connected.
(b) Connect the oscilloscope to the each of terminals FR+ – FR–, FL+ – FL–, RR+ – RR– or RL+ – RL– of the ABS ECU.

CHECK:
Drive the vehicle at about 20 km/h (12 mph), and check the signal waveform.

HINT:

- As the vehicle speed (rpm of the wheels) increases, a cycle of the waveform becomes shorter and the fluctuation in the output voltage becomes greater.
- When noise is identified in the waveform on the oscilloscope, error signals are generated due to the speed sensor rotor's scratches, looseness or foreign matter deposited on it.

OK	**Check and replace brake actuator ASSY.**

NG

6	**Check sensor rotor and sensor tip.**

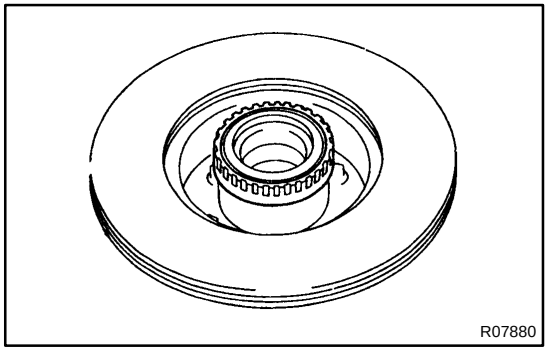

Front:

PREPARATION:

Remove the front axle hub (See page SA–15, SA–24).

CHECK:

Check the sensor rotor serrations.

OK:

No scratches, missing teeth or foreign objects.

PREPARATION:

Remove the front speed sensor (See page BR–59).

CHECK:

Check the sensor tip.

OK:

No scratches or foreign objects on the sensor tip.

HINT:

If foreign matter (including that on the sensor rotor side) is identified, remove it and after reassembling, check the output waveform.

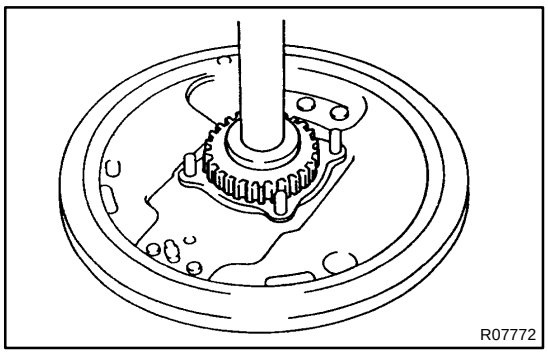

Rear:

PREPARATION:

Remove the rear axle shaft (See page SA–129).

CHECK:

Check the sensor rotor serrations.

OK:

No scratches, missing teeth or foreign objects.

PREPARATION:

Remove the rear speed sensor (See page BR–62).

CHECK:

Check the sensor tip.

OK:

No scratches or foreign objects on the sensor tip.

HINT:

If foreign matter (including that on the sensor rotor side) is identified, remove it and after reassembling, check the output waveform.

NG → **Replace speed sensor or rotor.**

NOTICE:

Check the speed sensor signal last (See page DI–534).

OK

Check and replace brake actuator ASSY.

DIB13–01

DTC	C0226 / 21 – C0246 / 23	ABS Solenoid Circuit

CIRCUIT DESCRIPTION

This solenoid goes on when signals are received from the ECU and controls the pressure acting on the wheel cylinders thus controlling the braking force.

DTC No.	DTC Detecting Condition	Trouble Area
C0226 / 21 C0236 / 22 C0246 / 23	Detection of any of conditions 1. and 2.: 1. With IG1 terminal voltage at 10V – 16V, solenoid circuit is open or short circuit for 0.05 sec. or longer. 2. With IG1 terminal voltage at 10V – 16V, during ABS control solenoid relay contact is OFF for 0.05 sec. or longer.	• Each solenoid circuit • Brake actuator • Wire harness

WIRING DIAGRAM

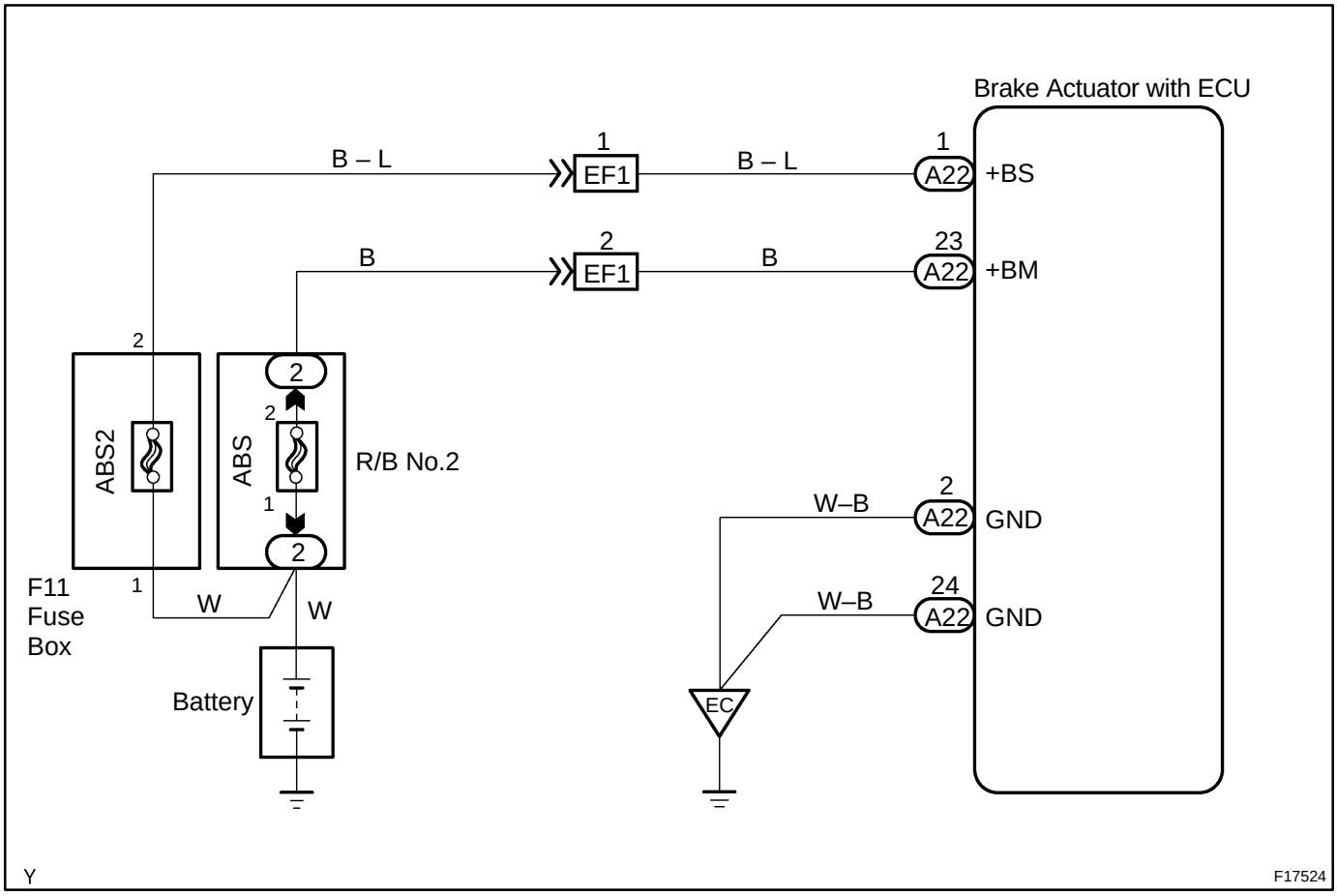

INSPECTION PROCEDURE

1	**Check the DTC once more.**

PREPARATION:

(a) Clear the DTC (See page DI–534).

(b) Turn the ignition switch OFF.

CHECK:

Turn the ignition switch ON, and check if the same DTC is stored in the memory.

NO → **No problem.**

YES

Check and replace brake actuator ASSY.

DIB14–01

DTC	C0273/13, C0274/14	ABS Motor Relay Circuit

CIRCUIT DESCRIPTION

The ABS motor relay supplies power to the ABS pump motor. While the ABS is activated, the ECU switches the ABS motor relay ON and operates the ABS pump motor.

DTC No.	DTC Detection Condition	Trouble Area
C0273/13	With IG1 voltage 10V or below during initial check or ABS control, pump motor relay is turned ON, and relay contact is not ON for 0.2 sec. or longer.	• ABS motor relay • ABS motor relay circuit • Wire harness
C0274/14	When pump motor relay is turned OFF, relay contact is ON for 3 sec. or longer.	

WIRING DIAGRAM

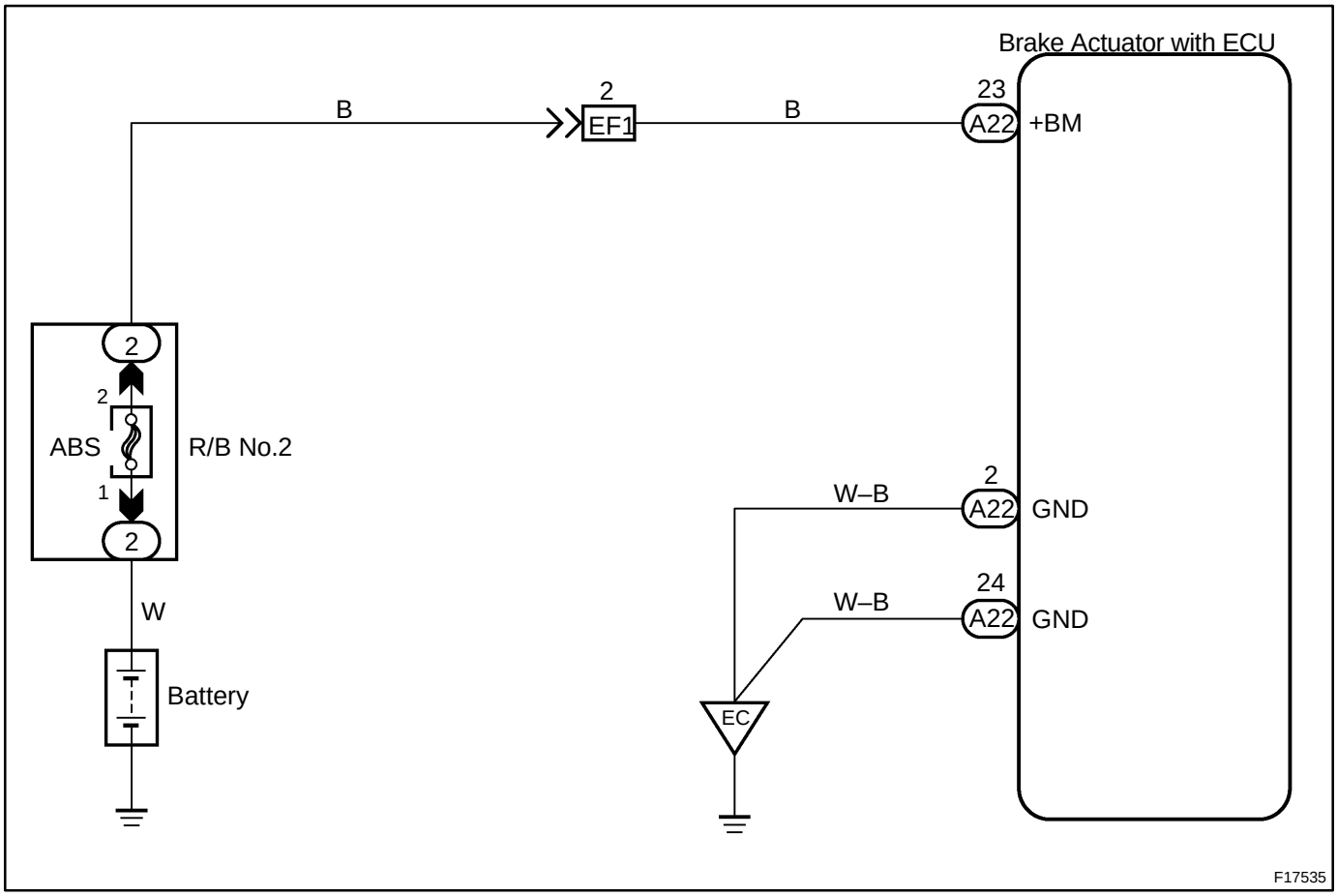

INSPECTION PROCEDURE

HINT:

Start the inspection from step 1 in case of using the hand–held tester and start from step 2 in case of not using the hand–held tester.

1	**Check ABS motor relay operation.**

PREPARATION:

(a) Connect the hand–held tester to the DLC3.
(b) Turn the ignition switch ON and push the hand–held tester main switch ON.
(c) Select the ACTIVE TEST mode on the hand–held tester.

CHECK:

Check the operation sound of the ABS motor individually when operating it with the hand–held tester.

OK:

The operation sound of the ABS motor relay should be heard.

NG → **Check and replace brake actuator ASSY.**

OK

2	**Check voltage between terminals +BM and GND of skid control ECU connector.**

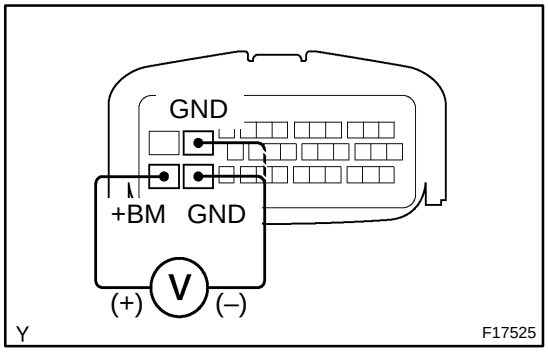

PREPARATION:

Disconnect the skid control ECU connector.

CHECK:

Measure the voltage between terminals +BM (23) and GND (2, 24) of skid contorl ECU harness side connector.

OK:

Voltage: 10 – 14 V

OK → **Check and replace brake actuator ASSY.**

NG

3	Check ABS fuse.

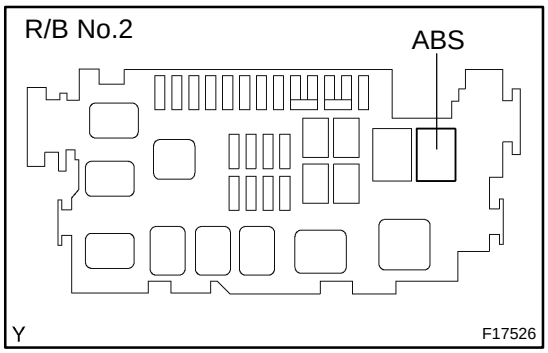

PREPARATION:
Remove the ABS fuse from the R/B No.2.
CHECK:
Check continuity of ABS fuse.
OK:

Continuity

NG	Check for short circuit in all the harness and components connected to ABS fuse (See attached wiring diagram).

OK

4	Check continuity between terminals GND of skid control ECU connector and body ground.

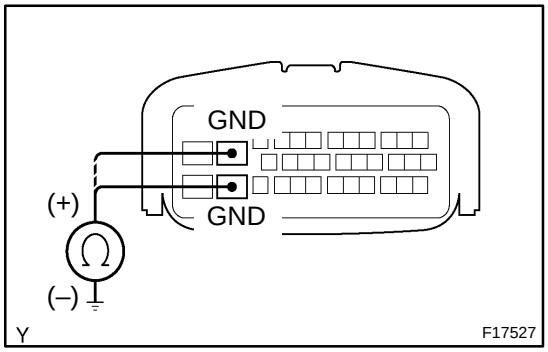

CHECK:
Measure resistance between terminal GND (2, 24) of skid control ECU harness side connector and body ground.
OK:

Resistance: 1 Ω or less

NG	Repair or replace harness or connector.

OK

Check and replace brake actuator ASSY.

DIB15–01

DTC	C0278 / 11, C0279 / 12	ABS Solenoid Relay Circuit

CIRCUIT DESCRIPTION

This relay supplies power to each ABS solenoid. After the ignition switch is turned ON, if the initial check is OK, the relay goes on.

DTC No.	DTC Detecting Condition	Trouble Area
C0278 / 11	Conditions 1. and 2. continue for 0.2 sec. or more: 1. ECU terminal IG1 voltage is 9.5 V to 18.5 V and the solenoid relay is ON, however, the contact point of the solenoid relay is OFF. 2. With solenoid relay ON, ECU terminal IG1 voltage becomes 9.5 V or less and the contact point of the solenoid relay does not become ON.	• ABS solenoid relay • ABS solenoid relay circuit • Wire harness
C0279 / 12	Immediately after ECU terminal IG1 becomes ON, and solenoid relay is OFF, however, when the condition that the solenoid relay due to the contact point is ON continues for 0.2 sec. or more.	

WIRING DIAGRAM

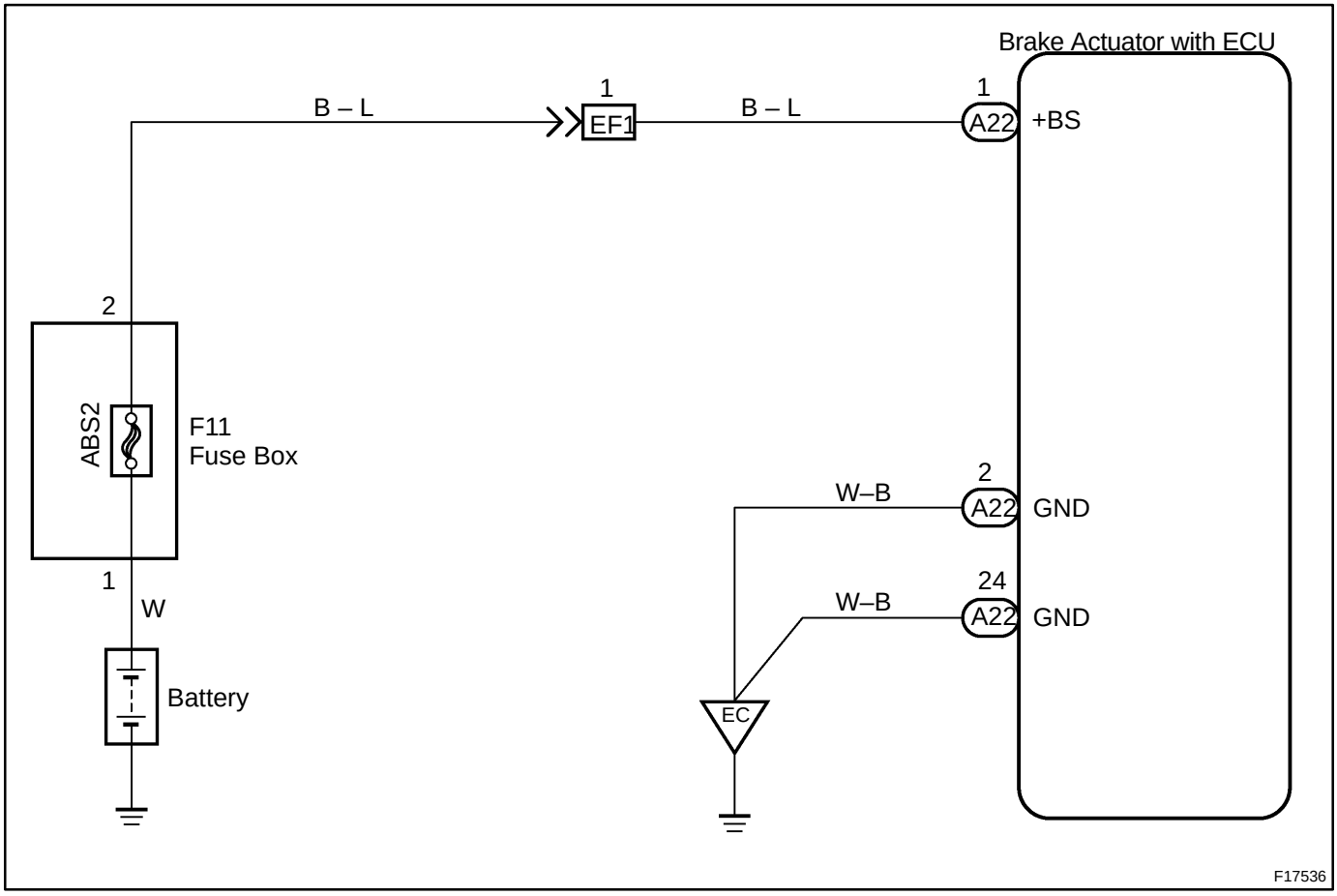

INSPECTION PROCEDURE

1	**Check voltage between terminals +BS and GND of skid control ECU connector.**

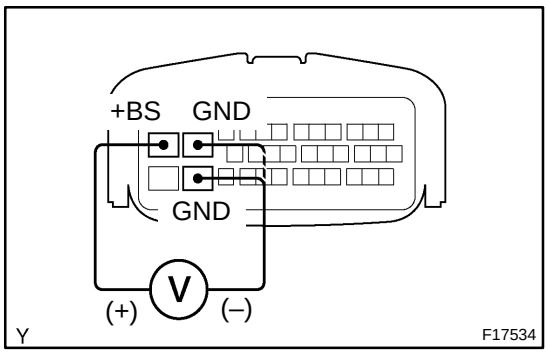

PREPARATION:
Disconnect the skid control ECU connector.
CHECK:
Measure the voltage between terminals +BM (1) and GND (2, 24) of skid control ECU harness side connector.
OK:
Voltage: 10 – 14 V

NG → **Repair or replace harness or connector.**

OK

2	**Check the DTC.**

PREPARATION:
(a) Clear the DTC (See page DI–534).
(b) Turn the ignition switch OFF.
CHECK:
Turn the ignition switch ON, and check the DTC.
OK:
Normal code

OK → **No problem.**

NG

Check and replace brake actuator ASSY.

DI19F–08

Tc Terminal Circuit

CIRCUIT DESCRIPTION

Connecting terminals Tc and CG of the DLC3 causes the ECU to display the DTC by flashing the ABS warning light.

WIRING DIAGRAM

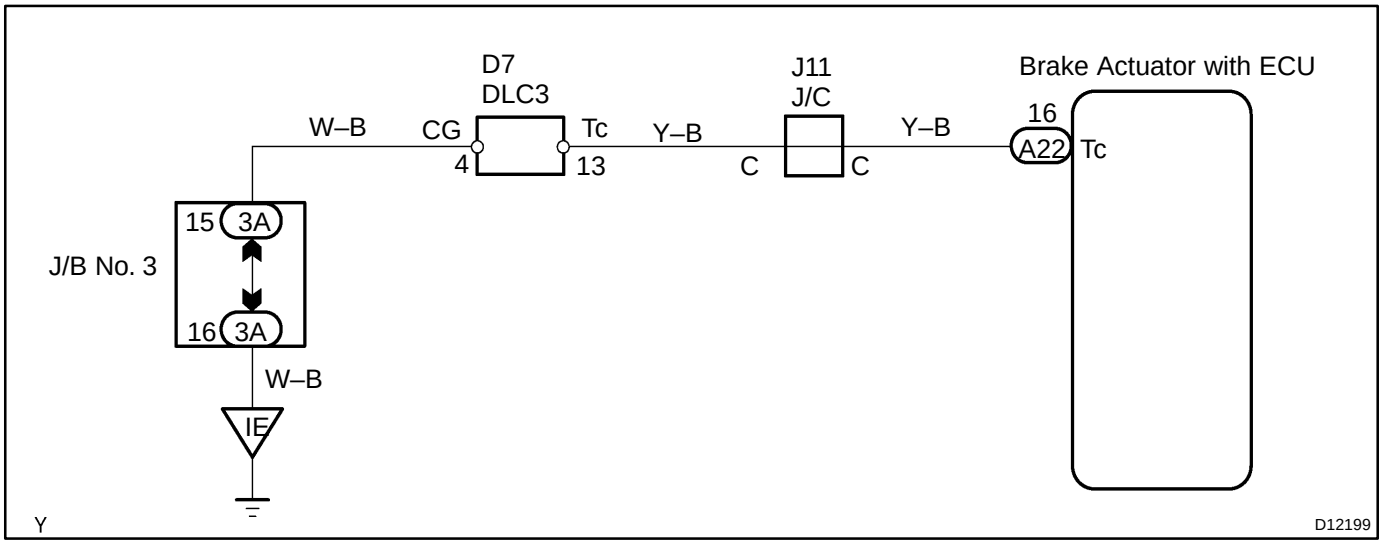

INSPECTION PROCEDURE

1	**Check voltage between terminals Tc and CG of DLC3.**

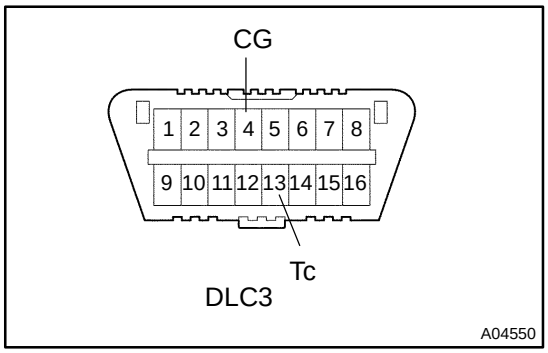

CHECK:

(a) Turn the ignition switch ON.

(b) Measure voltage between terminals Tc and CG of DLC3.

OK:

Voltage: 10 – 14 V

OK → **If ABS warning light does not blink even after Tc and CG are connected, the ECU may be defective.**

NG

2	**Check for open and short in harness and connector between skid control ECU and DLC3, DLC3 and body ground (See page IN–28).**

NG → **Repair or replace harness or connector.**

OK

Check and replace brake actuator ASSY.

DI19G–08

Ts Terminal Circuit

CIRCUIT DESCRIPTION

The sensor check circuit detects abnormalities in the speed sensor signal which cannot be detected with the DTC check.
Connecting terminals Ts and CG of the DLC3 in the engine compartment starts the check.

WIRING DIAGRAM

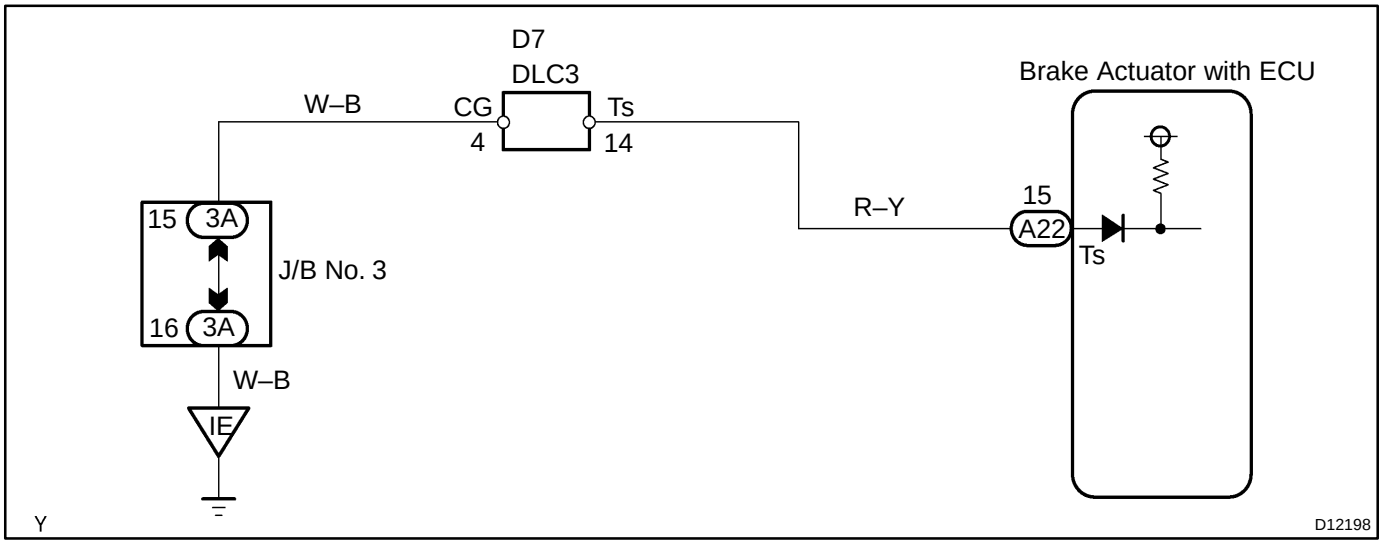

INSPECTION PROCEDURE

1	**Check voltage between terminals Ts and CG of DLC3.**

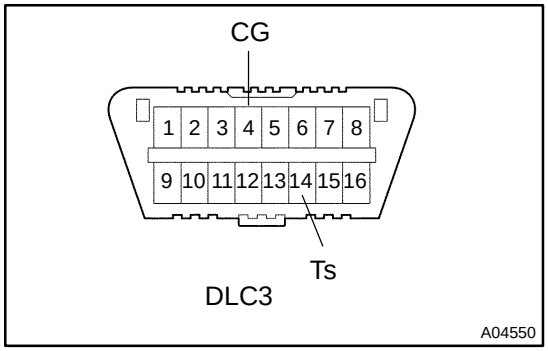

CHECK:

(a) Turn the ignition switch ON.

(b) Measure voltage between terminals Ts and CG of DLC3.

OK:

Voltage: 10 – 14 V

OK

If ABS warning light does not blink even after Ts and CG are connected, the ECU may be defective.

NG

2	**Check for open and short in harness and connector between brake actuator and DLC3, DLC3 and body ground (See page IN–28).**

NG → **Repair or replace harness or connector.**

OK

Check and replace brake actuator ASSY.

DI03U–12

CUSTOMER PROBLEM ANALYSIS CHECK

ABS Check Sheet

Inspector's Name :

Customer's Name		**Registration No.**	
		Registration Date	/ /
		Frame No.	
Date Vehicle Brought In	/ /	**Odometer Reading**	km miles

Date Problem First Occurred	/ /
Frequency Problem Occurs	☐ Continuously ☐ Intermittently (times a day)

Symptoms	☐ ABS does not operate.	
	☐ ABS does not operate efficiently.	
	ABS Warning Light Abnormal	☐ Remains ON ☐ Does not Light Up
	BRAKE Warning Light Abnormal (PKB released)	☐ Remains ON ☐ Does not Light Up
	BRAKE Warning Buzzer Abnormal	☐ Sounds ☐ Does not sound

DTC Check	**1st Time**	☐ Normal Code ☐ Malfunction Code (Code)
	2nd Time	☐ Normal Code ☐ Malfunction Code (Code)

DI03W–23

DIAGNOSTIC TROUBLE CODE CHART

NOTICE:

When removing the part, turn the ignition switch OFF.

HINT:

- Using SST 09843–18020 or 09843–18040, connect the terminals Tc and CG of DLC3, and remove the short pin.
- If any abnormality is not found when inspecting parts, inspect the ECU.
- If a malfunction code is displayed during the DTC check, check the circuit listed for that code. For details of each code, turn to the page referred to under the ”See page” for respective ”DTC No.” in the DTC chart.

DTC No. (See Page)	Detection Item	Trouble Area
C0278 / 11 (DI–558)	Open or short circuit in ABS solenoid relay circuit	• ABS solenoid relay • ABS solenoid relay circuit
C0279 / 12 (DI–558)	B+ short circuit in ABS solenoid relay circuit	
C0273 / 13 (DI–555)	Open or short circuit in ABS motor relay circuit	• ABS motor relay • ABS motor relay circuit
C0274 / 14 (DI–555)	B+ short circuit in ABS motor relay circuit	
C0226 / 21 (DI–553)	Open or short circuit in ABS actuator solenoid (SFR) circuit	• Brake actuator • SFRR or SFRH circuit
C0236 / 22 (DI–553)	Open or short circuit in ABS actuator solenoid (SFL) circuit	• Brake actuator • SFLR or SFLH circuit
C0246 / 23 (DI–553)	Open or short circuit in ABS actuator solenoid (SRR) circuit	• Brake actuator • SRH or SRR circuit
C0200 / 31*1 (DI–546)	Right front wheel speed sensor signal malfunction	• Right front, left front, right rear and left rear speed sensor • Each speed sensor circuit • Sensor rotor
C0205 / 32*1 (DI–546)	Left front wheel speed sensor signal malfunction	
C0210 / 33*1 (DI–546)	Right rear wheel speed sensor signal malfunction	
C0215 / 34*1 (DI–546)	Left rear wheel speed sensor signal malfunction	
C1235 / 35 (DI–546)	Foreign matter is attached on the tip of the right front sensor	• Right front, left front, right rear and left rear speed sensor • Each speed sensor circuit • Sensor rotor
C1236 / 36 (DI–546)	Foreign matter is attached on the tip of the left front sensor	
C1237 / 37 (DI–560)	Some tire is different size from the other tires	Tire size
C1238 / 38 (DI–546)	Foreign matter is attached on the tip of the right rear sensor	• Right front, left front, right rear and left rear speed sensor • Each speed sensor circuit • Sensor rotor
C1239 / 39 (DI–546)	Foreign matter is attached on the tip of the left rear sensor	
C1241 / 41 (DI–561)	Low battery positive voltage or open circuit in IG1 circuit	• Battery • Charging system • Power source circuit
C1243 / 43 *2,*3 (DI–565)	Malfunction in deceleration sensor (constant output)	• Deceleration sensor • Wire harness for deceleration sensor system

C1244 / 44 *2,*3 (DI–567)	Open or short circuit in deceleration sensor circuit	• Deceleration sensor • Deceleration sensor circuit
C1245 / 45 *2,*3 (DI–565)	Malfunction in deceleration sensor	• Deceleration sensor • Wire harness for deceleration sensor system
C1248 / 48*3 (DI–569)	Open or short circuit in rear differential lock circuit	• Rear differential lock • Rear differential lock circuit
C1249 / 49 (DI–572)	Open circuit in stop light switch circuit	• Stop light bulb • Stop light switch circuit
C1251 / 51 (DI–574)	• Pump motor is locked • Open circuit in pump motor ground	ABS pump motor
Always ON (DI–576)	Malfunction in ABS ECU	• Battery • Charging system • Power source circuit • Skid control ECU

*1: As the DTC cannot be erased by replacing parts alone do either of the following operations.
(1) Clear the DTC (See page DI–576).
(2) At the vehicle speed of 20 km/h (12 mph), drive the vehicle for 30 sec. or more.
*2: 4WD and pre–runner.
*3: w/ Rear differential lock.

ANTI–LOCK BRAKE SYSTEM

HOW TO PROCEED WITH TROUBLESHOOTING

DI051–23

Troubleshooting in accordance with the procedure on the following pages.

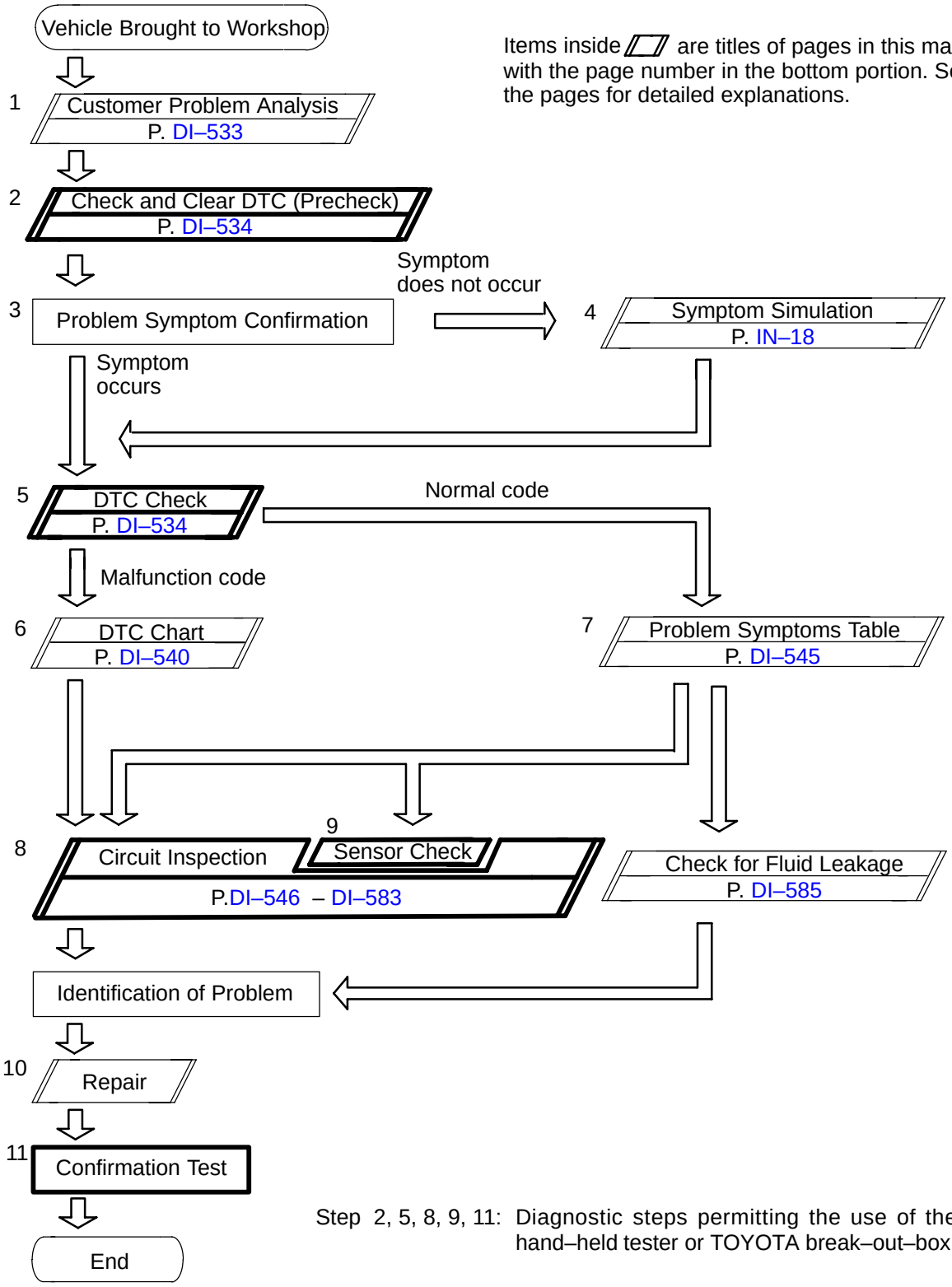

Items inside ▱ are titles of pages in this manual, with the page number in the bottom portion. See the pages for detailed explanations.

Step 2, 5, 8, 9, 11: Diagnostic steps permitting the use of the hand–held tester or TOYOTA break–out–box.

Fail safe function:
When a failure occurs in the ABS system, the ABS warning light is lit and the ABS operation is prohibited.

DI03X–12

PARTS LOCATION

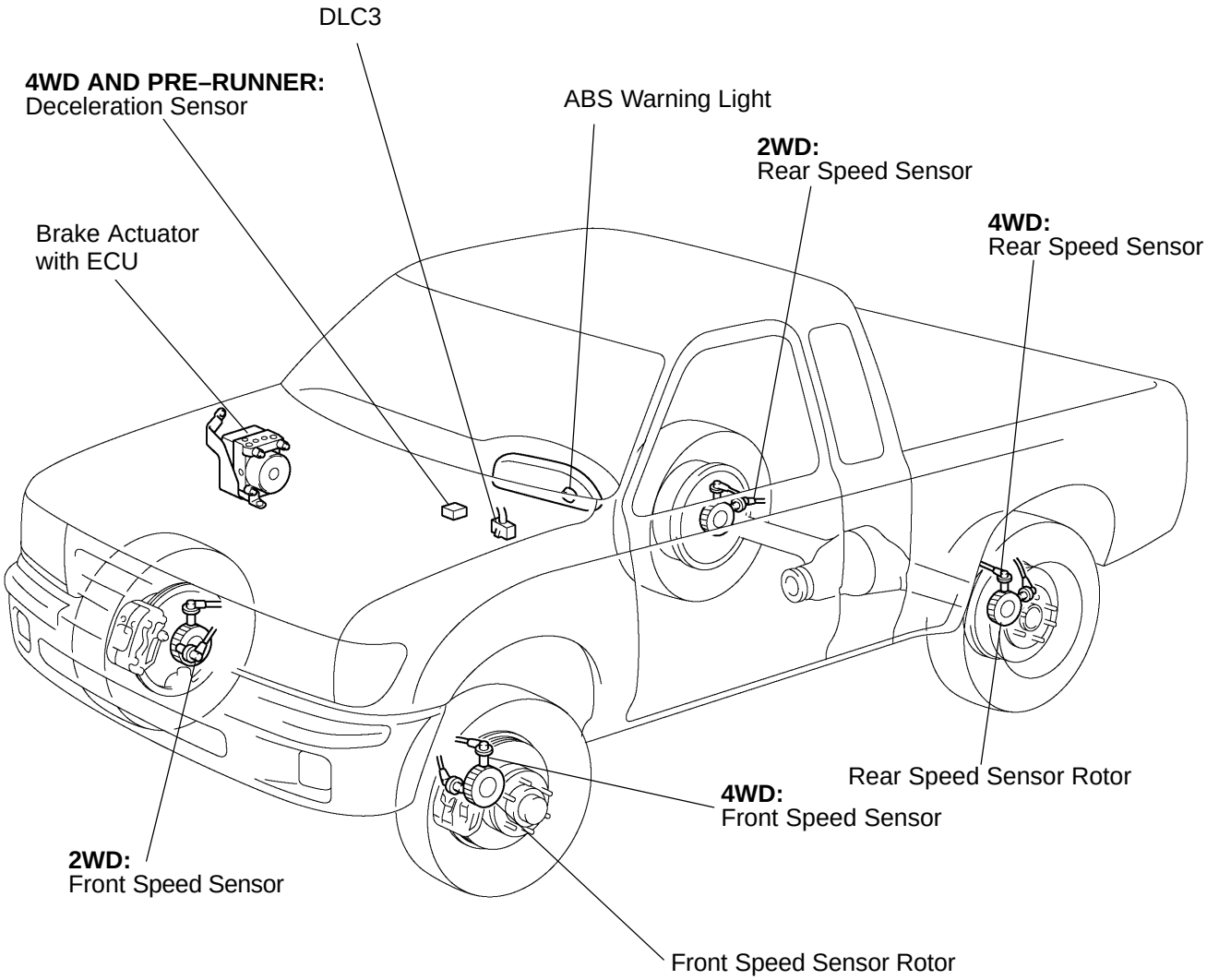

Y

F17523

DIB11–01

PRE–CHECK

1. DIAGNOSIS SYSTEM

(a) Check the indicator.

(1) When the ignition switch is turned ON, check that the ABS warning lights go on for 3 seconds.

HINT:

If the indicator check result is not normal, proceed to trouble-shooting for the ABS warning light circuit (See page DI–579).

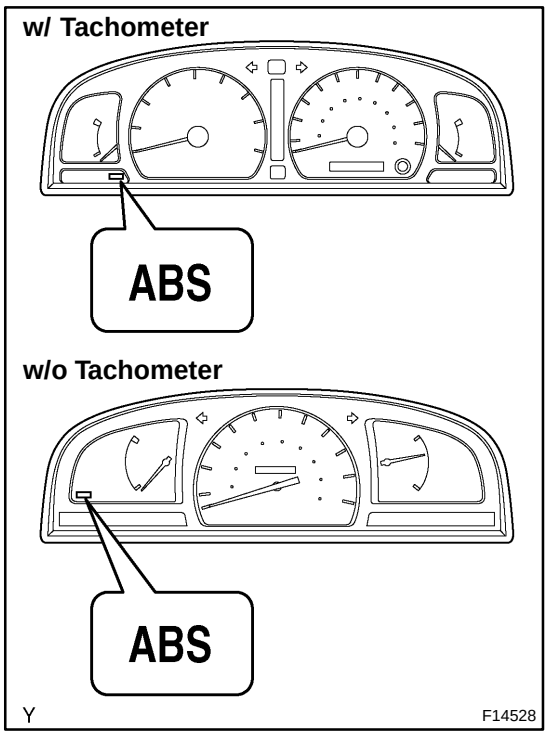

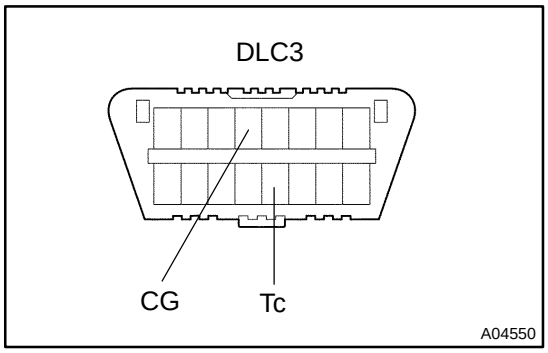

(b) In case of not using hand–held tester:

Check the DTC.

(1) Using SST, connect terminals Tc and CG of DLC3.

SST 09843–18020 or 09843–18040

(2) Turn the ignition switch ON.

(3) Read the DTC from the ABS warning light on the combination meter.

HINT:

- If no code appears, inspect the diagnostic circuit or ABS warning light circuit (See page DI–579 or DI–581).
- As an example, the blinking patterns for normal code and codes 11 and 21 are shown on the left.

(4) Codes are explained in the code table on page DI–540.

(5) After completing the check, disconnect terminals Tc and CG of DLC3, and turn off the display.

If 2 or more malfunctions are indicated at the same time the lowest numbered DTC will be displayed 1st.

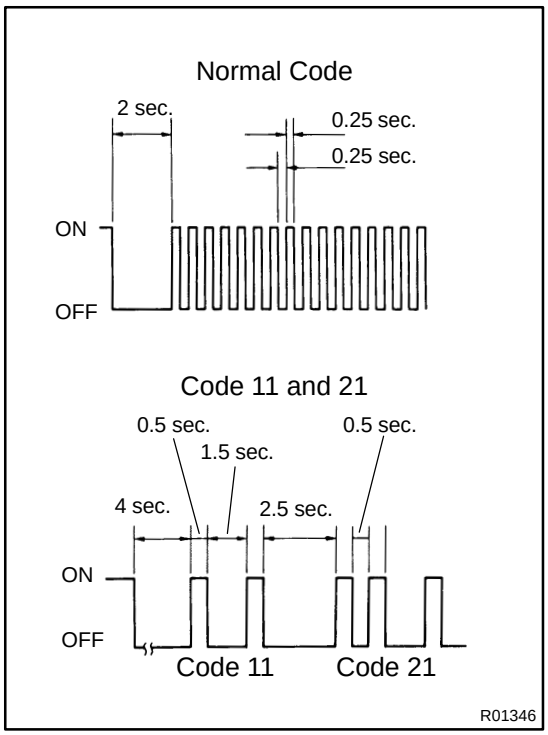

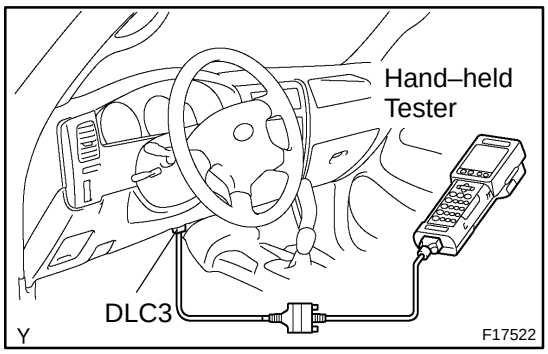

(c) In case of using hand–held tester:
Check the DTC.
(1) Hook up the hand–held tester to the DLC3.
(2) Read the DTC by following the prompts on the tester screen.

HINT:
Please refer to the hand–held tester operator's manual for further details.

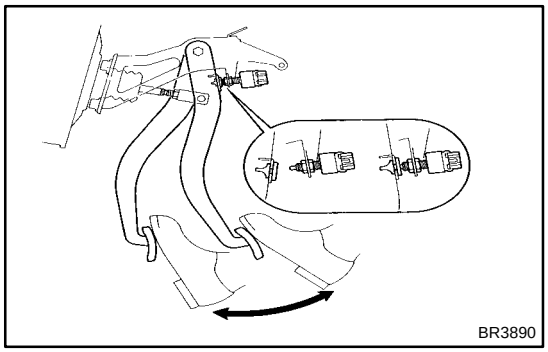

(d) In case of not using hand–held tester:
Clear the DTC.
(1) Using SST, connect terminals Tc and CG of DLC3.
SST 09843–18020 or 09843–18040
(2) Turn the ignition switch ON.
(3) Clear the DTC stored in ECU by depressing the brake pedal 8 or more times within 5 seconds.
(4) Check that the warning light shows the normal code.
(5) Remove the SST from the terminals of DLC3.
SST 09843–18020 or 09843–18040

HINT:
Disconnecting the battery cable during repairs will not erase the DTC in the ECU.

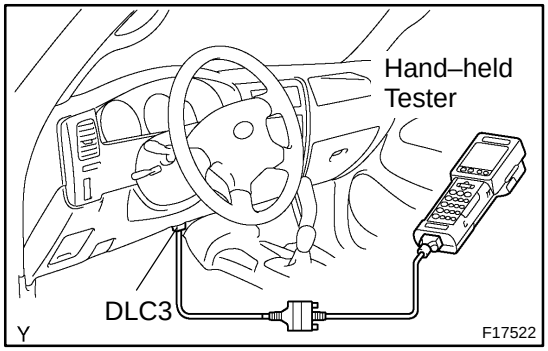

(e) In case of using hand–held tester:
Clear the DTC.
(1) Hook up the hand–held tester to the DLC3.
(2) Turn the ignition switch ON.
(3) Operate the hand–held tester to erase the codes. (See hand–held tester operator's manual.)

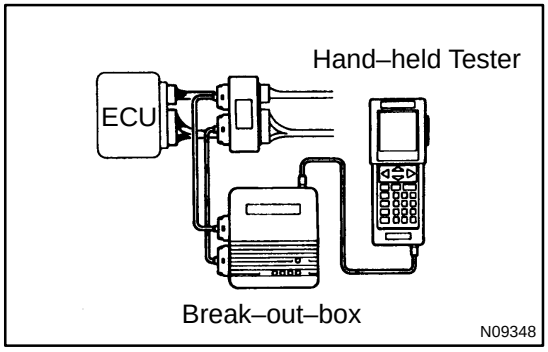

(f) (Reference):
Using break–out–box and hand–held tester, measure the ECU terminal values.
(1) Turn the ignition switch OFF.
(2) Hook up the break–out–box and hand–held tester to the vehicle.
(3) Turn the ignition switch ON.
(4) Read the ECU input/output values by following the prompts on the tester screen.

HINT:

- Hand–held tester has a ”Snapshot” function. This records the measured values and is effective in the diagnosis of intermittent problems.
- Please refer to the hand–held tester/break–out–box operator’s manual for further details.

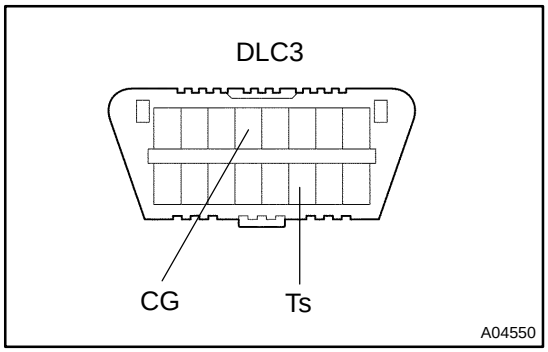

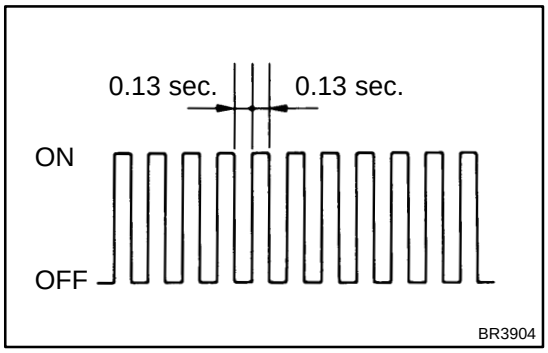

2. SENSOR SIGNAL CHECK (TEST MODE)

HINT:

If the ignition switch is turned from ON to ACC or LOCK during test mode, DTC will be erased.

(a) In case of not using hand–held tester:
Check the sensor signal.
(1) Turn the ignition switch OFF.
(2) Using SST, connect terminals Ts and CG of DLC3.
SST 09843–18020
(3) Start the engine.
(4) Check that the ABS warning light blinks.

HINT:

If the ABS warning light does not blink, inspect the ABS warning light circuit and Ts circuit (See page DI–579, DI–583).

(5) Keep the vehicle in the stationary condition on the flat place for 6 sec. or more.
(6) Shift the transfer lever in L4 position.
(7) Shift the transfer lever in H position.
(8) Drive vehicle straight forward.
When driving the vehicle with the speed faster than 45 km/h (28 mph) for several seconds, check that the ABS warning light comes off.

HINT:

There is a case that the sensor check is not completed if the vehicle has its rear wheels spun or its steering wheel steered during this check.

(9) Stop the vehicle.
(10) Check ABS warning light lights up when the rear diff. lock indicator light lights up.

(11) Using SST, connect terminals Tc and CG of DLC3.
SST 09843–18020 or 09843–18040

(12) Read the number of blinks of the ABS warning light.

HINT:

- See the list of DTC on the next page.
- If every sensor is normal, a normal code is output (A cycle of 0.25 sec. ON and 0.25 sec. OFF is repeated).
- If 2 or more malfunctions are indicated at the same time, the lowest numbered code will be displayed 1st.

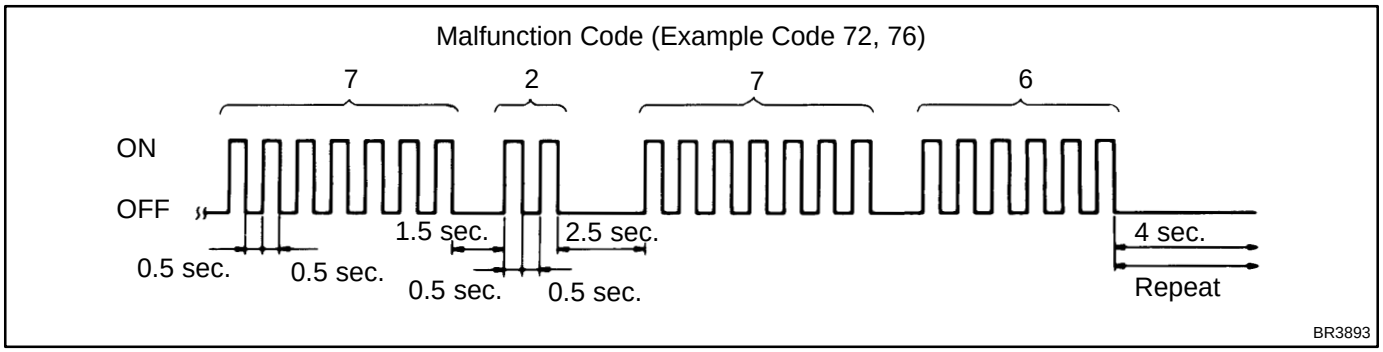

(13) After doing the check, disconnect the SST from terminals of DLC3, and turn the ignition switch OFF.
SST 09843–18020 or 09843–18040

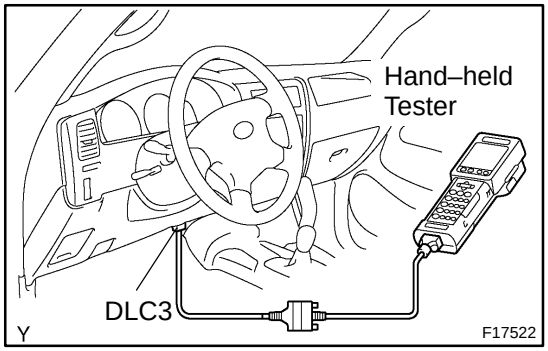

(b) In case of using hand–held tester:
Check the sensor signal.

(1) Hook up the hand–held tester to the DLC3.
(2) Do step (3) to (9) on the previous page.
(3) Read the DTC by following the prompts on the tester screen.

HINT:

Please refer to the hand–held tester operator's manual for further details.

DTC of sensor check function:

Code No.	Diagnosis	Trouble Area
C1271 / 71	Low output voltage of right front speed sensor	• Right front speed sensor • Sensor installation • Sensor rotor
C1272 / 72	Low output voltage of left front speed sensor	• Left front speed sensor • Sensor installation • Sensor rotor
C1273 / 73	Low output voltage of right rear speed sensor	• Right rear speed sensor • Sensor installation • Sensor rotor
C1274 / 74	Low output voltage of left rear speed sensor	• Left rear speed sensor • Sensor installation • Sensor rotor
C1275 / 75	Abnormal change in output voltage of right front speed sensor	Right front speed sensor rotor
C1276 / 76	Abnormal change in output voltage of left front speed sensor	Left front speed sensor rotor
C1277 / 77	Abnormal change in output voltage of right rear speed sensor	Right rear speed sensor rotor
C1278 / 78	Abnormal change in output voltage of left rear speed sensor	Left rear speed sensor rotor
C1279 / 79*1	Deceleration sensor is faulty	• Deceleration sensor • Sensor installation
C1282 / 82*2	Malfunction of 4WD detecting switch	4WD detecting switch
C1283 / 83*2	Malfunction of L4 detecting switch	L4 detecting switch

*1: 4WD and pre–runner.
*2: 4WD.

3. DECELERATION SENSOR OPERATION DIAGNOSIS SYSTEM

CAUTION:
While checking the deceleration sensor operating diagnosis system, ABS does not work and brake system works as a conventional brake system.

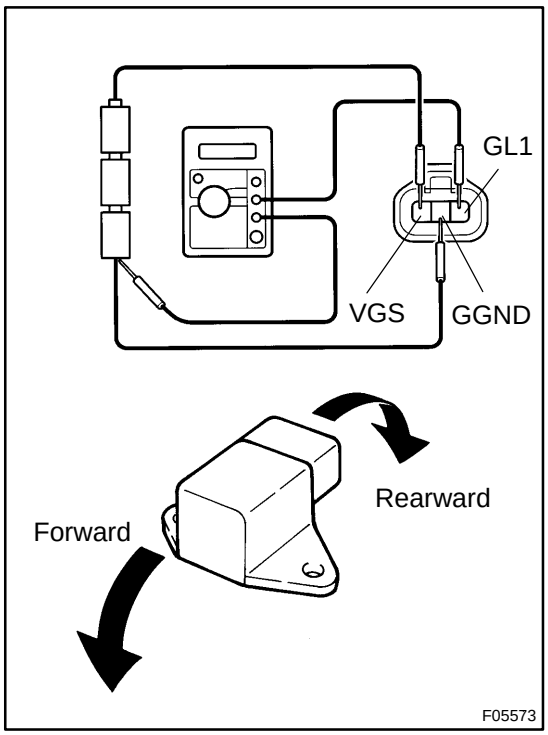

4. 4WD AND PRE–RUNNER:
ABS DECELERATION SENSOR CHECK

(a) Connect 3 dry batteries of 1.5 V in series.

(b) Connect VGS terminal to the batteries' positive (+) terminal, and GGND terminal to the batteries' negative (–) terminal, apply about 4.5 V between VGS and GGND terminals.

NOTICE:

Do not apply voltage of 6 V or more to terminals VGS and GGND.

(c) Check the output voltage of GL1 terminals.

Symbols	Condition	Standard Value
GL1	Horizontal	About 2.3 V
GL1	Lean forward	0.4 V – about 2.3 V
GL1	Lean rearward	About 2.3 V – 4.1 V

HINT:

- If the sensor is tilted too much it may show the wrong value.
- If dropped, the sensor should be replaced with a new one.
- The sensor removed from the vehicle should not be placed upside down.

DI03Z–20

PROBLEM SYMPTOMS TABLE

If a normal code is displayed during the DTC check but the problem still occurs, check the circuits for each problem symptom in the order given in the table below and proceed to the relevant troubleshooting page.

NOTICE:

When replacing skid control ECU, sensor or etc., turn the ignition switch OFF.

Symptom	Suspect Area	See page
ABS does not operate	Only when 1. – 4. are all normal and the problem is still occurring, replace the skid control ECU. 1. Reconfirm the DTC and check that the normal code is output. 2. IG power source circuit 3. Speed sensor circuit 4. Check the hydraulic circuit for leakage.	 DI–534 DI–561 DI–546 DI–585
ABS does not operate efficiently	Only when 1. – 4. are all normal and the problem is still occurring, replace the skid control ECU. 1. Recomfirm the DTC and check that the normal code is output. 2. Speed sensor circuit 3. Stop light switch circuit 4. Check the hydraulic circuit for leakage.	 DI–534 DI–546 DI–572 DI–585
ABS warning light abnormal	1. ABS warning light circuit 2. Skid control ECU	DI–579 IN–28
DTC check cannot be done	Only when 1. and 2. are all normal and the problem is still occurring, replace the skid control ECU. 1. ABS warning light circuit 2. Tc terminal circuit	 DI–579 DI–581
Speed sensor signal check cannot be done	1. Ts terminal circuit 2. Skid control ECU	DI–583 IN–28

DI194–06

TERMINALS OF ECU

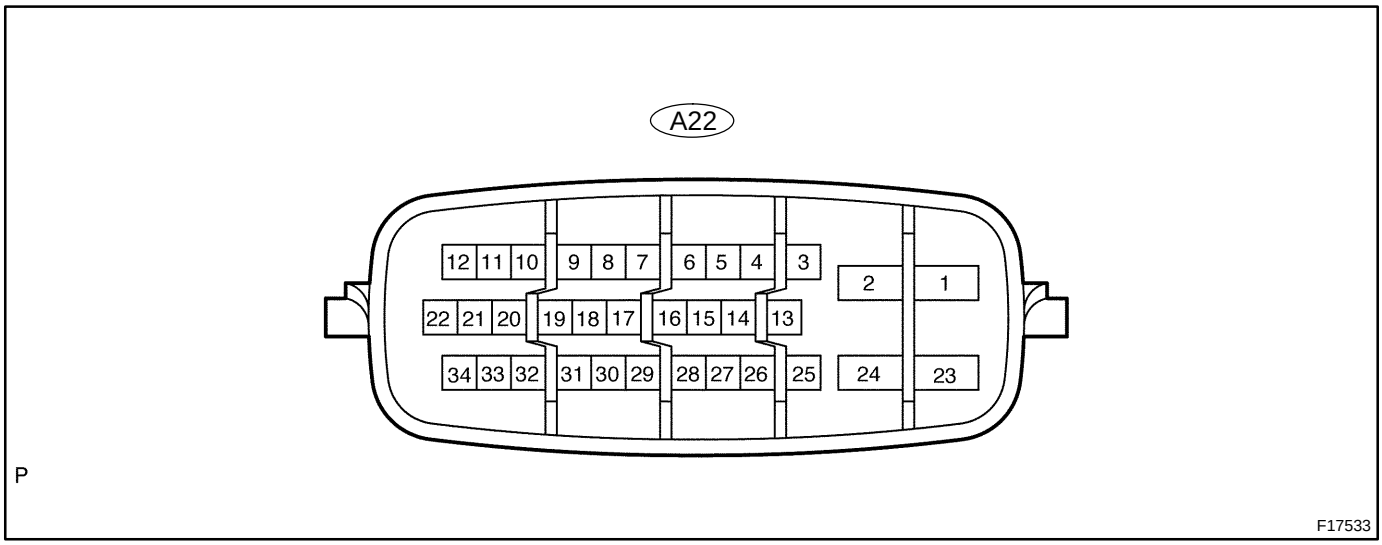

Symbols (Terminals No.)	Wiring Color	Condition	STD Voltage (V)
IG1 (A22 – 25) – GND (A22 – 2, 24)	Y – R ↔ W – B	IG switch ON	10 – 14
+BS (A22 – 1) – GND (A22 – 2, 24)	B – L ↔ W – B	Always	10 – 14
+BM (A22 – 23) – GND (A22 – 2, 24)	B ↔ W – B	Always	10 – 14
FL+ (A22 – 9) – FL– (A22 – 8)	Y ↔ BR	IG switch ON Slowly turn left front wheel	AC generation
FR+ (A22 – 31) – FR– (A22 – 30)	P ↔ L	IG switch ON Slowly turn right front wheel	AC generation
RL+ (A22 – 11) – RL– (A22 – 12)	R ↔ G	IG switch ON Slowly turn left rear wheel	AC generation
RR+ (A22 – 33) – RR– (A22 – 34)	B ↔ W	IG switch ON Slowly turn right rear wheel	AC generation
STP (A22 – 10) – GND (A22 – 2, 24)	G – W ↔ W – B	Stop lamp switch ON	10 – 14
		Stop lamp switch OFF	Below 1.0
WA (A22 – 13) – GND (A22 – 2, 24)	B – L ↔ W – B	IG switch ON, ABS warning light ON	7 – 10
		IG switch ON, ABS warning light OFF	Below 2.0
D/G (A22 – 14) – GND (A22 – 2, 24)	W↔ W – B	IG switch ON, ABS warning light OFF	10 – 14
Ts (A22 – 15) – GND (A22 – 2, 24)	R – Y ↔ W – B	IG switch ON	10 – 14
Tc (A22 – 16) – GND (A22 – 2, 24)	Y – B ↔ W – B	IG switch ON	10 – 14
EXI (A22 – 21) * – GND (A22 – 2, 24)	G – B ↔ W – B	IG switch ON, 4WD detecting switch OFF	10 – 14
		IG switch ON, 4WD detecting switch ON	Below 2.0
EXI2 (A22 – 19) – GND (A22 – 2, 24)	L – Y ↔ W – B	IG switch ON, REAR DIFF LOCK switch OFF	8 – 14
		IG switch ON, REAR DIFF LOCK switch ON	Below 2.0
EXI4 (A22 – 17) * – GND (A22 – 2, 24)	GR ↔ W – B	IG switch ON, transfer except L4 position	8 – 14
		IG switch ON, transfer in L4 position	Below 2.0
VGS (A22 – 29) * – GND (A22 – 2, 24)	W↔ W – B	IG switch ON, ABS warning light OFF	4.75 – 5.25

GGND (A22 – 7) * – GND (A22 – 2, 24)	B↔ W – B	IG switch ON, ABS warning light OFF	10 – 14
GL1 (A22 – 4) * – GND (A22 – 2, 24)	R↔ W – B	IG switch ON, ABS warning light OFF	10 – 14

*: 4WD and pre–runner

O/D Cancel Signal Circuit (Only for 3RZ – FE)

CIRCUIT DESCRIPTION

While driving uphill with cruise control activated, in order to minimize gear shifting and provide smooth cruising O/D may be prohibited temporarily under some conditions.
The cruise control ECU sends O/D cut signals to the ECM as necessary and the ECM cancels O/D shifting until these signals are discontinued.

WIRING DIAGRAM

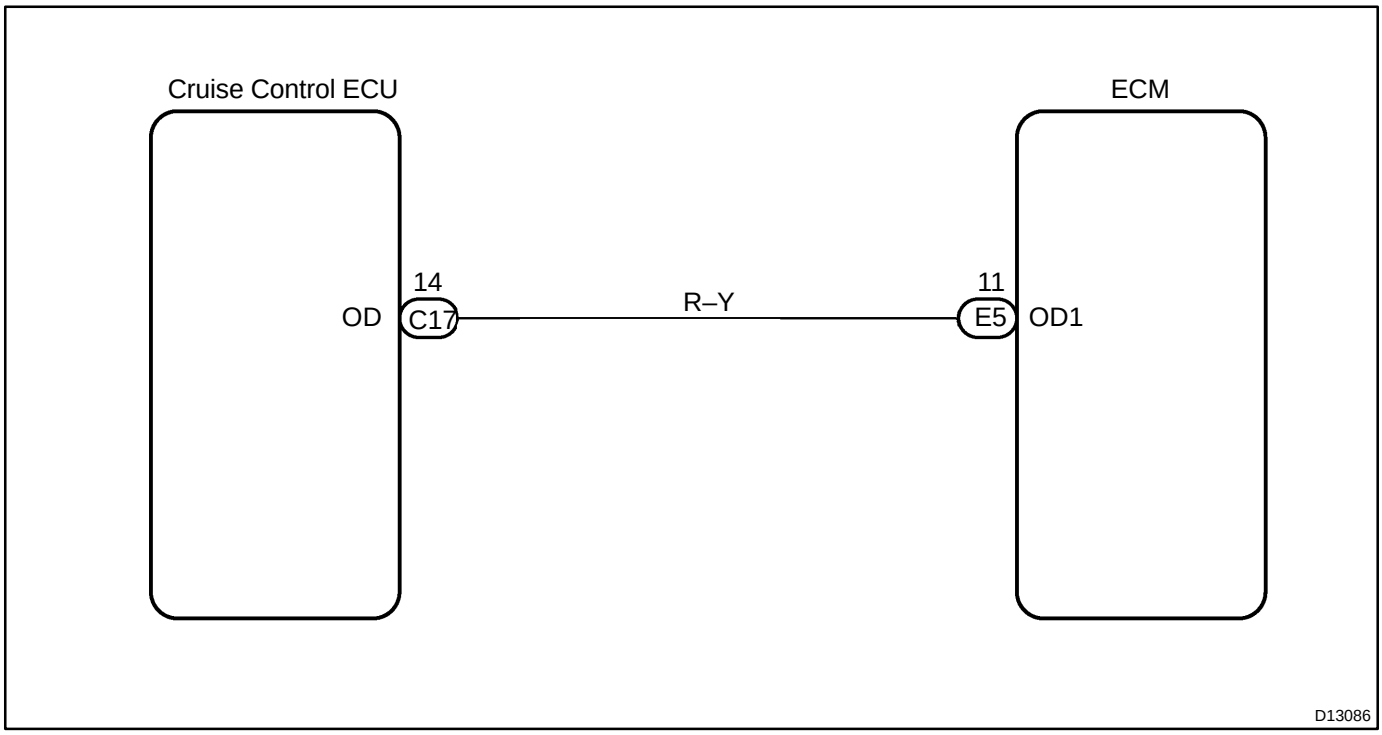

INSPECTION PROCEDURE

1	**Check voltage between terminal OD1 of ECM and body ground.**

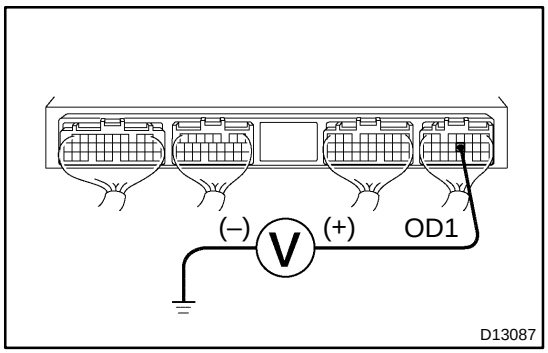

PREPARATION:
Turn the ignition switch ON.
CHECK:
Measure voltage between terminal OD1 of ECM and body ground.
OK:
Voltage: 4 – 6 V

OK	**Proceed to next circuit inspection shown on matrix chart (See page DI–476).**

NG

2	**Check voltage between terminal OD of cruise control ECU harness side connector and body ground.**

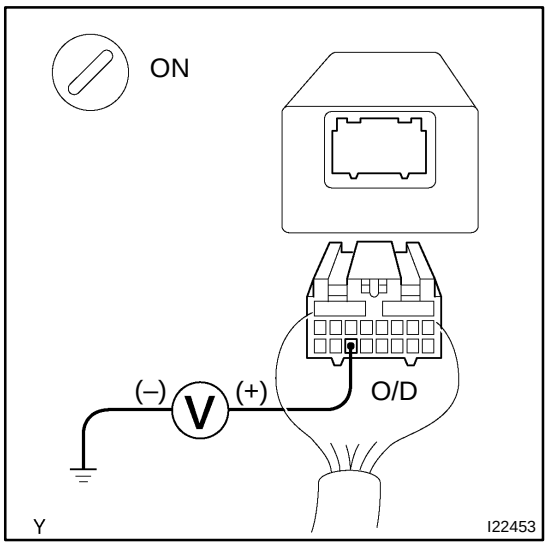

PREPARATION:
(a) Disconnect the cruise control ECU connector.
(b) Turn the ignition switch ON.
CHECK:
Measure voltage between terminal OD of cruise control ECU harness side connector and body ground.
OK:
Voltage: 9 – 14 V

OK	**Check and replace the cruise control ECU (See page IN–28).**

NG

3	**Check harness and connector between cruise control ECU and ECM (See page IN–28).**

NG → **Repair or replace the harness or connector.**

OK

Check and replace the ECM (See page IN–28).

DI0T2–08

O/D Main Switch & O/D OFF Indicator Light Circuit

CIRCUIT DESCRIPTION

The O/D main switch is a momentary type switch. When pressing the O/D OFF main switch, the O/D OFF indicator light lights up and ECM prohibit shifting to O/D, and when pressing it again, the O/D OFF indicator light goes off and ECM allows shifting to O/D. Turning the IG switch OFF will reset the O/D OFF indicator light.

WIRING DIAGRAM

3RZ–FE

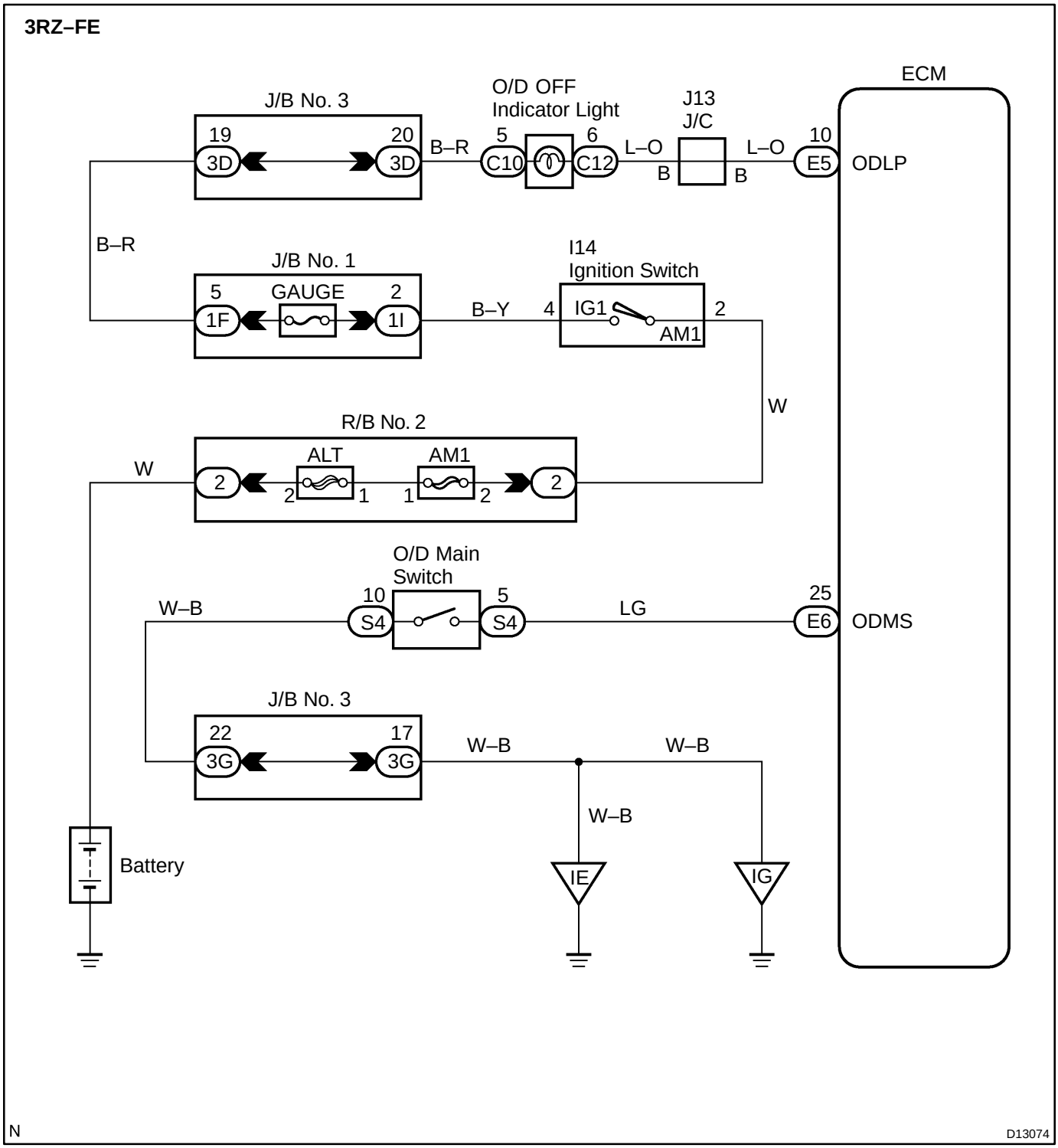

5VZ–FE

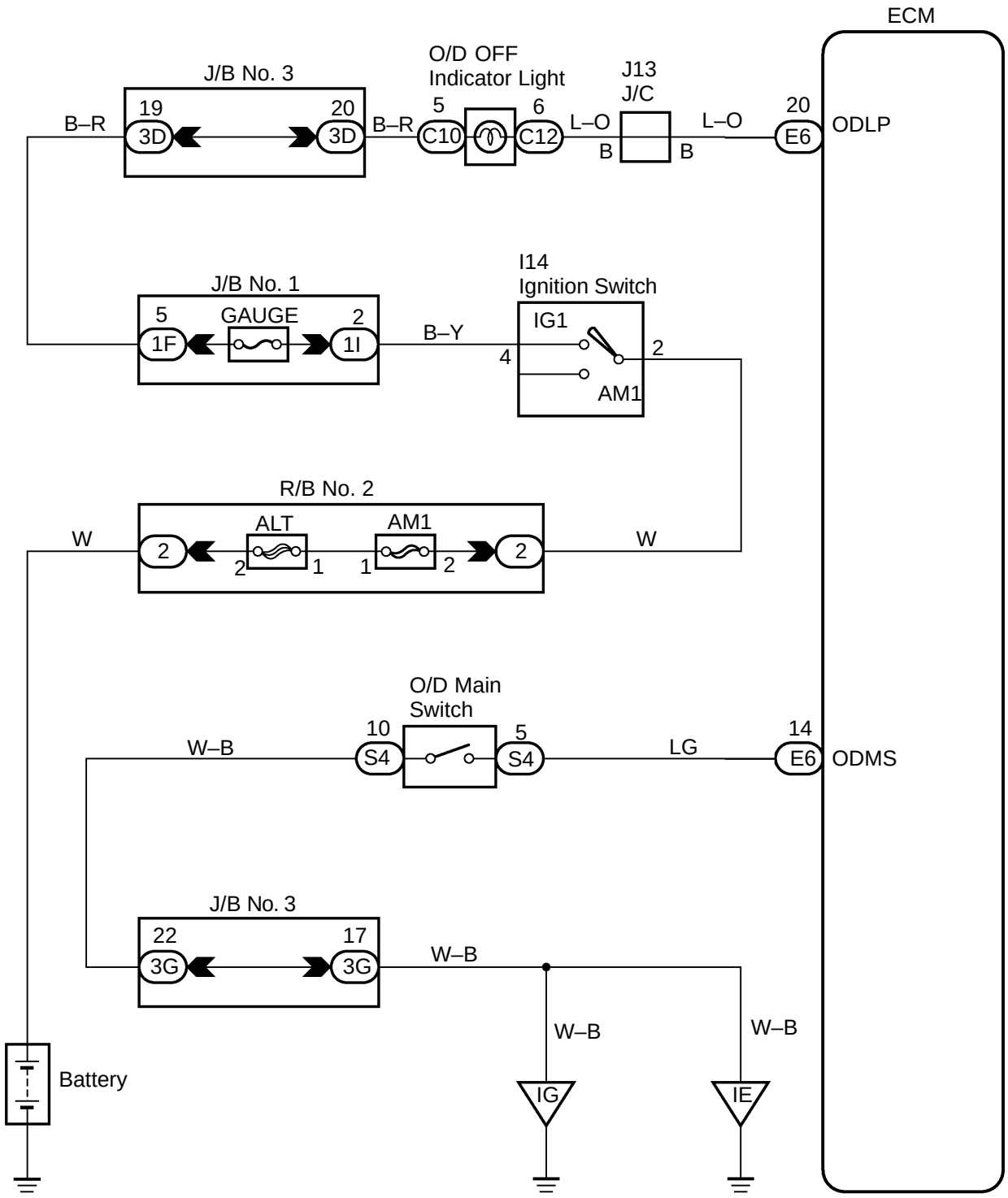
ECM
O/D OFF
Indicator Light
J/B No. 3
J13
J/C
19
20
3D
3D
B–R
B–R
5
6
C10
C12
L–O
L–O
B
B
20
E6
ODLP
J/B No. 1
I14
Ignition Switch
5
GAUGE
2
1F
1I
B–Y
IG1
4
2
AM1
R/B No. 2
W
ALT
AM1
2
2
1
1
2
2
W
O/D Main
Switch
10
5
W–B
S4
S4
LG
14
E6
ODMS
J/B No. 3
22
17
3G
3G
W–B
W–B
W–B
Battery
IG
IE
D10874

INSPECTION PROCEDURE

1	**Check operation of O/D main switch.**

PREPARATION:

Turn the ignition switch ON.

CHECK:

(a) Check O/D OFF indicator light when O/D main switch is pushed in to ON.

(b) Check O/D OFF Indicator light when O/D main switch is pushed again.

OK:

(a) O/D OFF indicator light lights up.

(b) O/D OFF indicator light goes off.

OK → **Proceed to next inspection shown on problem symptoms table (See page DI–476).**

NG

2	**Check and replace the combination meter (See page BE–2).**

NG → **Replace the combination meter.**

OK

3	Check O/D main switch.

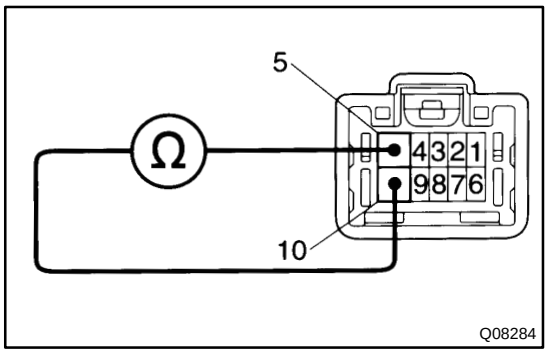

PREPARATION:
Disconnect the O/D main switch connector.
CHECK:
Check continuity between 5 and 10 of the O/D main switch connector.
OK:

O/D main switch condition	Specified condition
Press continuously O/D main switch	Continuity
Release O/D main switch	No continuity

NG → **Replace and repair O/D main switch.**

OK

4	Check voltage between terminal ODMS of ECM and body ground.

3RZ–FE

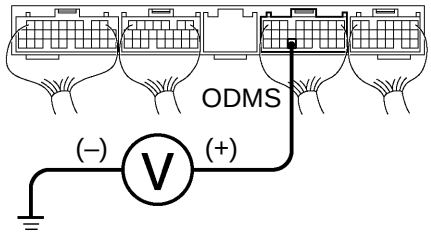

5VZ–FE

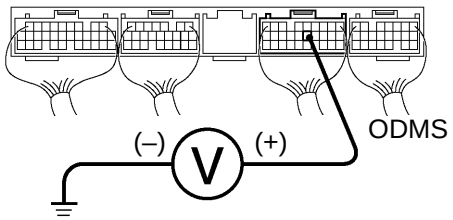

N
D12443

PREPARATION:
Turn the ignition switch ON.
CHECK:
Check voltage between terminal ODMS of ECM and body ground when O/D main switch is ON and OFF.
OK:

O/D main switch	Specified voltage
Press continuously O/D main switch	Below 1.0 V
Release O/D main switch	10 – 14 V

OK → **Check and replace the ECM (See page IN–28).**

NG

5	Check voltage between terminal ODLP of ECM and body ground.

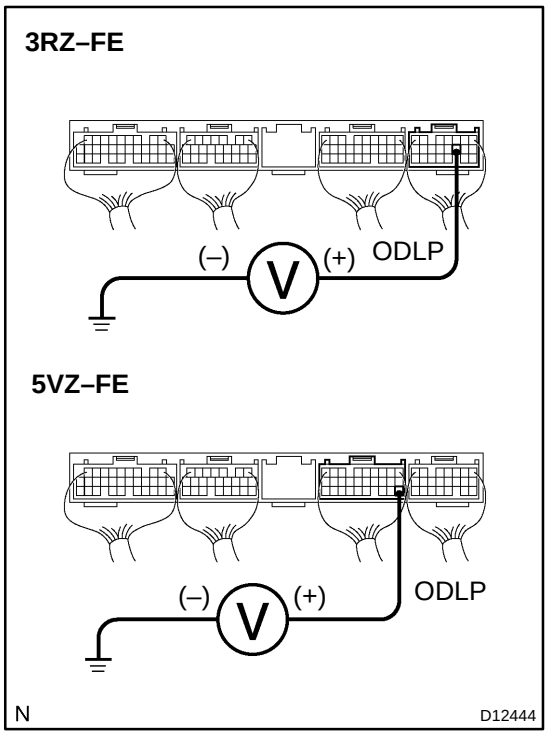

PREPARATION:

(a) Disconnect the connector of ECM.

(b) Turn the ignition switch ON.

CHECK:

Check voltage between terminal ODLP of ECM and body ground.

OK:

Voltage: 7.5 – 14 V

OK → **Check and replace the ECM (See page IN–28).**

NG

Check and replace harness and connector between combination meter and ECM, O/D main switch and ECM, O/D main switch and body ground (See page IN–28).

DTC	P1782	Transfer L4 Switch Circuit

CIRCUIT DESCRIPTION

The ECM receive signal L4 from the indicator switch (LOW switch).

DTC No.	DTC Detecting Condition	Trouble Area
P1782	When driving under conditions (a) and (b) for 1.8 seconds or more, the indicator switch (LOW switch) is ON . (1–trip detection logic) (a) Output shaft speed 3000 rpm or less (b) Transfer shift position is H	• Short in transfer L4 position switch (LOW switch) signal circuit • transfer L4 position switch (LOW switch) • ECM

WIRING DIAGRAM

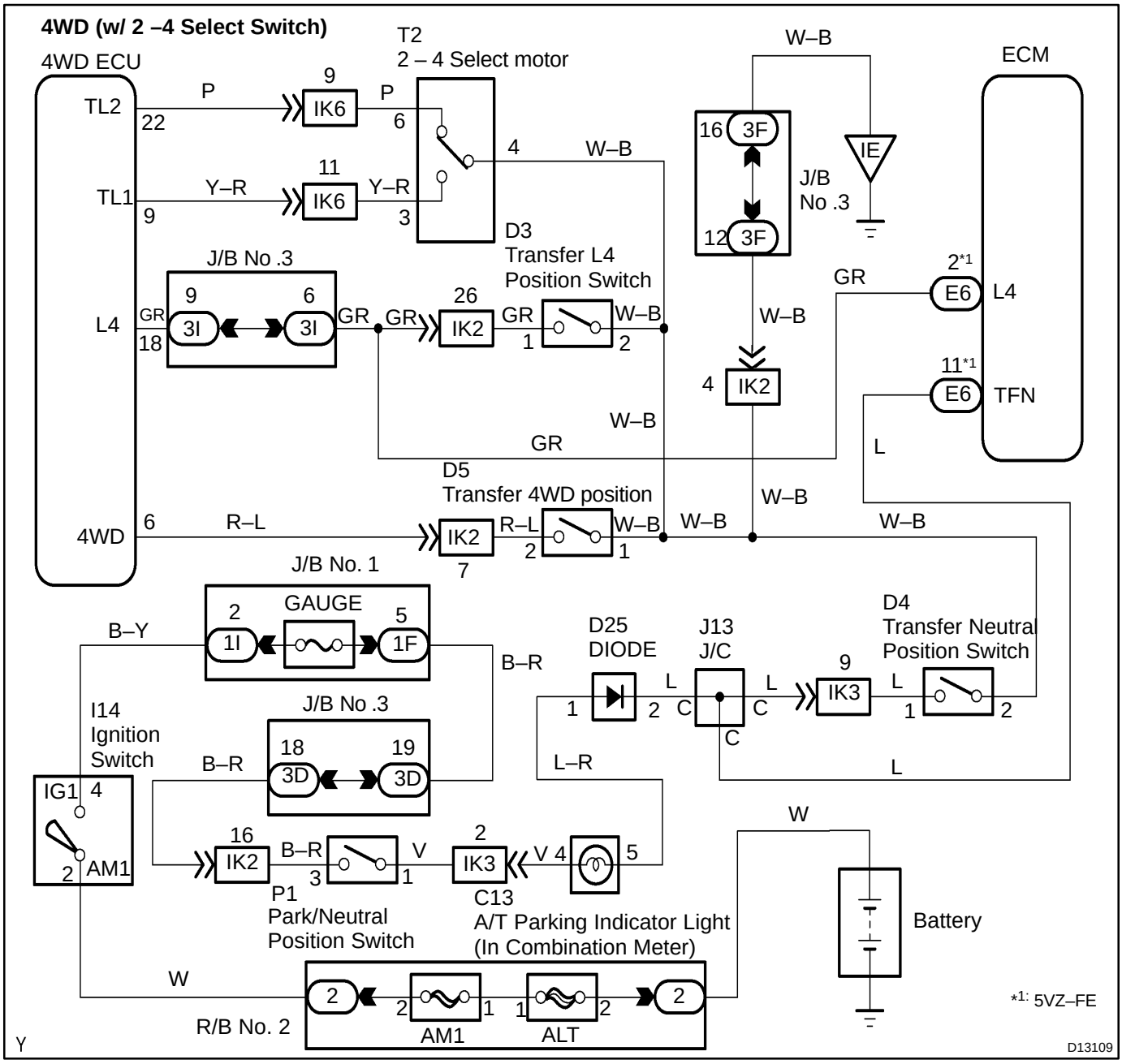

4WD (w/o 2 –4 Select Switch)

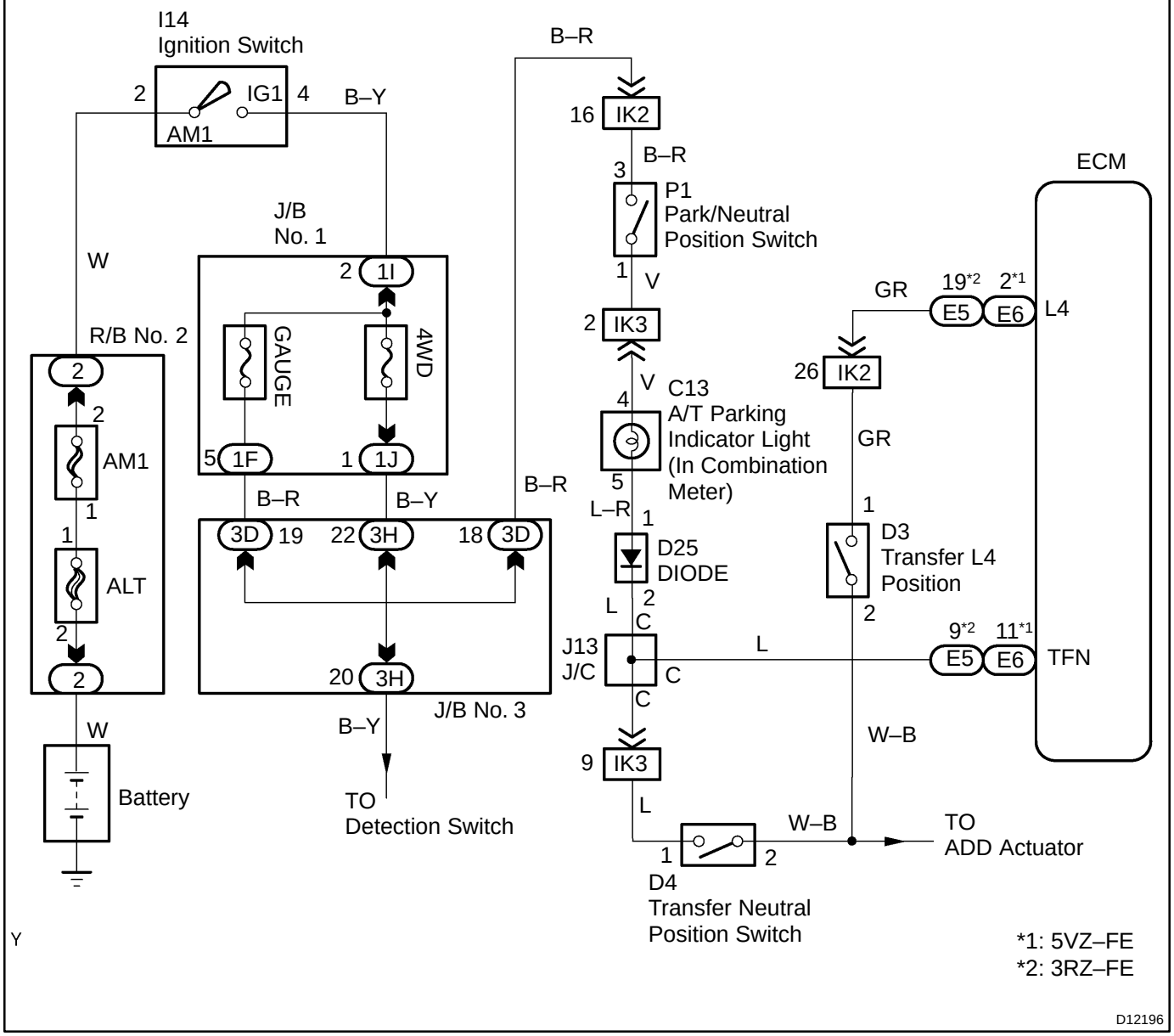

INSPECTION PROCEDURE

1	Check transfer L4 position switch.

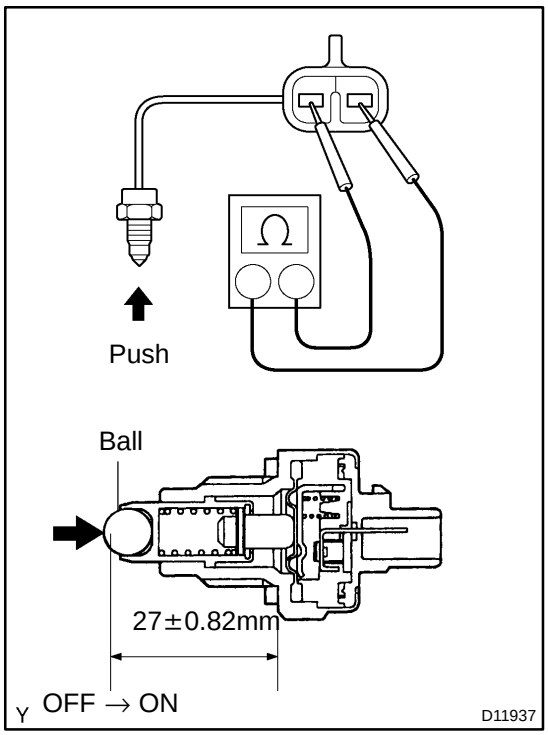

PREPARATION:

Remove the transfer L4 position switch (See page TR–10).

CHECK:

Check that there is continuity between terminals, as shown.

OK:

Switch position	Specified condition
Push	Continuity
Free	No continuity

NG → **Replace transfer L4 position switch.**

OK

2	Check voltage between terminal L4 of ECM and body ground.

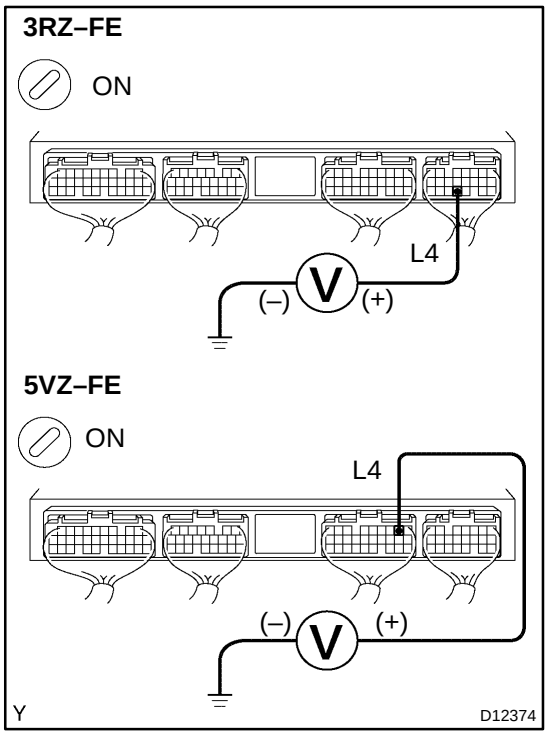

PREPARATION:

Remove the ECM with connectors still connected.

CHECK:

(a) Turn the ignition switch ON.

(b) Measure voltage between terminal L4 of ECM and body ground when transfer in L4 position.

OK:

Transfer shift position	Voltage (V)
L4	Below 1.5
Except L4	9 – 14

OK → **Check and replace ECM.**

NG

3	Check for open or short circuit in harness and connector between transfer L4 position switch and ECM (See page IN–28).

NG → **Repair or replace harness or connector.**

OK

Check and replace ECM.

DTC	P2716	Pressure Control Solenoid ”D” Electrical (Only for 5VZ–FE)

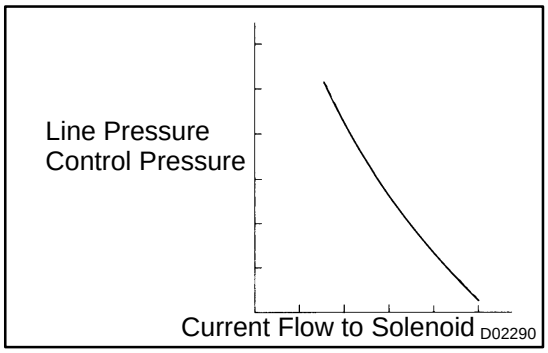

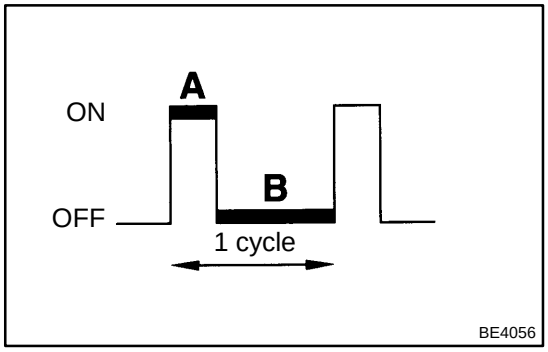

CIRCUIT DESCRIPTION

The throttle pressure that is applied to the primary regulator valve (which modulates line pressure) causes the solenoid valve SLT, under electric control, to precisely and minutely modulate and generate line pressure according to the accelerator pedal effort, or the detected engine power output.
This reduces the function of line pressure and provides smooth shifting characteristics.
Upon receiving the throttle valve opening angle signal, the ECM controls the line pressure by sending a predetermined (*) duty ratio to the solenoid valve, modulating the line pressure, and generating throttle pressure.
(*) Duty Ratio
The duty ratio is the ratio of the period of continuity in one cycle. For example, if A is the period of continuity in one cycle, and B is the period of non–continuity, then

$$\text{Duty Ratio} = \frac{A}{A + B} \times 100\ (\%)$$

DTC No.	DTC Detection Condition	Trouble Area
P2716	ECM detects solenoid SLT circuit malfunction for 1 sec. or more	• Open or short in shift solenoid valve SLT circuit • Shift solenoid valve SLT • ECM

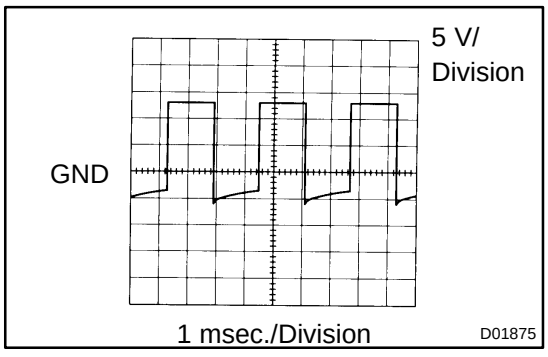

HINT:
The waveform between terminals SLT+ and SLT– while the engine is idling is shown on the left.

WIRING DIAGRAM

5VZ–FE

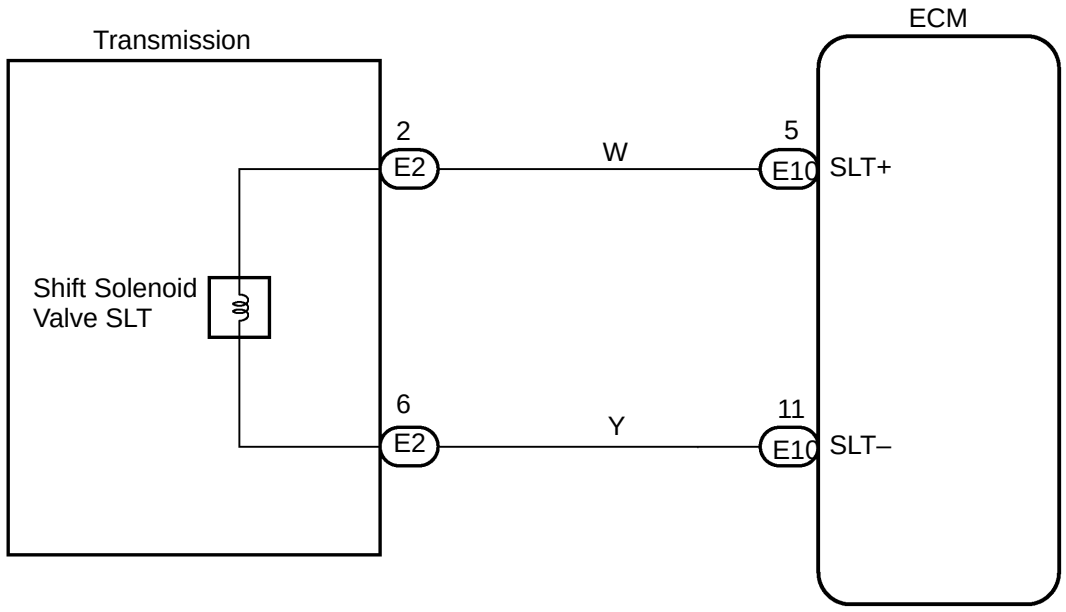

N

D13080

INSPECTION PROCEDURE

1	Check shift solenoid valve SLT.

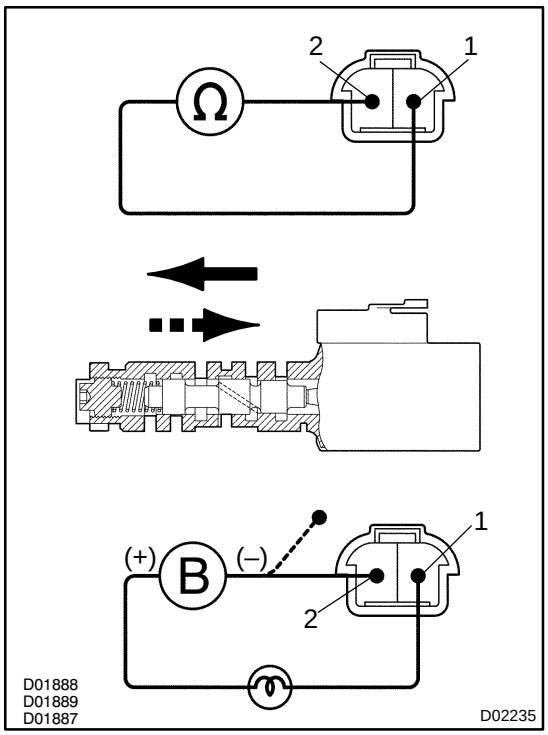

PREPARATION:

(a) Remove the oil pan.

(b) Disconnect the solenoid connector.

CHECK:

(a) Measure the resistance between terminals 1 and 2 of the solenoid connector.

Standard: 5.0 – 5.6 Ω at 20°C (68°F)

(b) Connect the positive (+) lead through an 8 – 10 W bulb to terminal 1 of the solenoid connector and negative (–) lead to terminal 2, then check the movement of the valve.

Standard:

When battery positive voltage is applied.	Valve moves in ← direction
When battery positive voltage is cut off.	Valve moves in ■■→ direction

OK:

Standard.

NG → **Replace shift solenoid valve SLT.**

OK

2	Check harness and connector between shift solenoid valve SLT and ECM.

NG → **Repair or replace harness or connector.**

OK

Check and replace the ECM (See page IN–28).

Pattern Select Switch Circuit

CIRCUIT DESCRIPTION

The ECM memory contains the shift programs for the NORMAL and POWER patterns, 2 position, L position and the lock–up patterns. Following the programs corresponding to the signals from the pattern select switch, the park/neutral position and other various sensors, the ECM switches the solenoid valves ON and OFF, and controls the transmission gear change and the lock–up clutch operation.

WIRING DIAGRAM

3RZ–FE

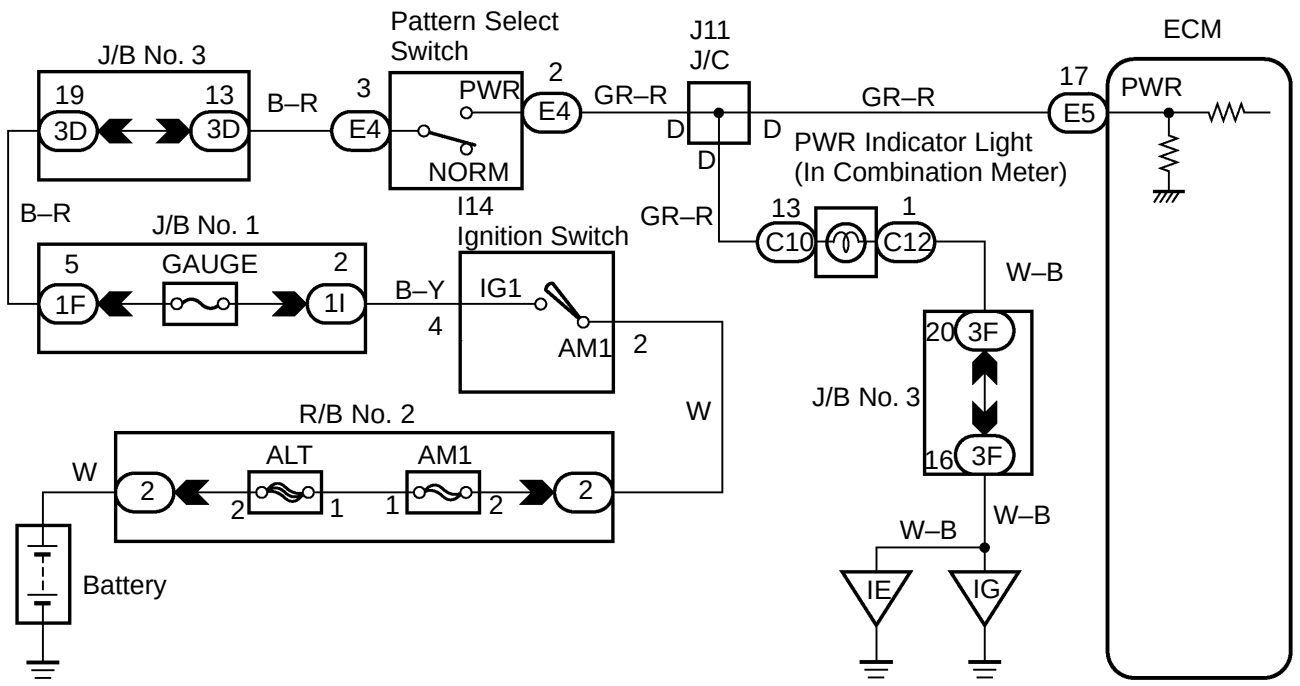

D00259

5VZ–FE

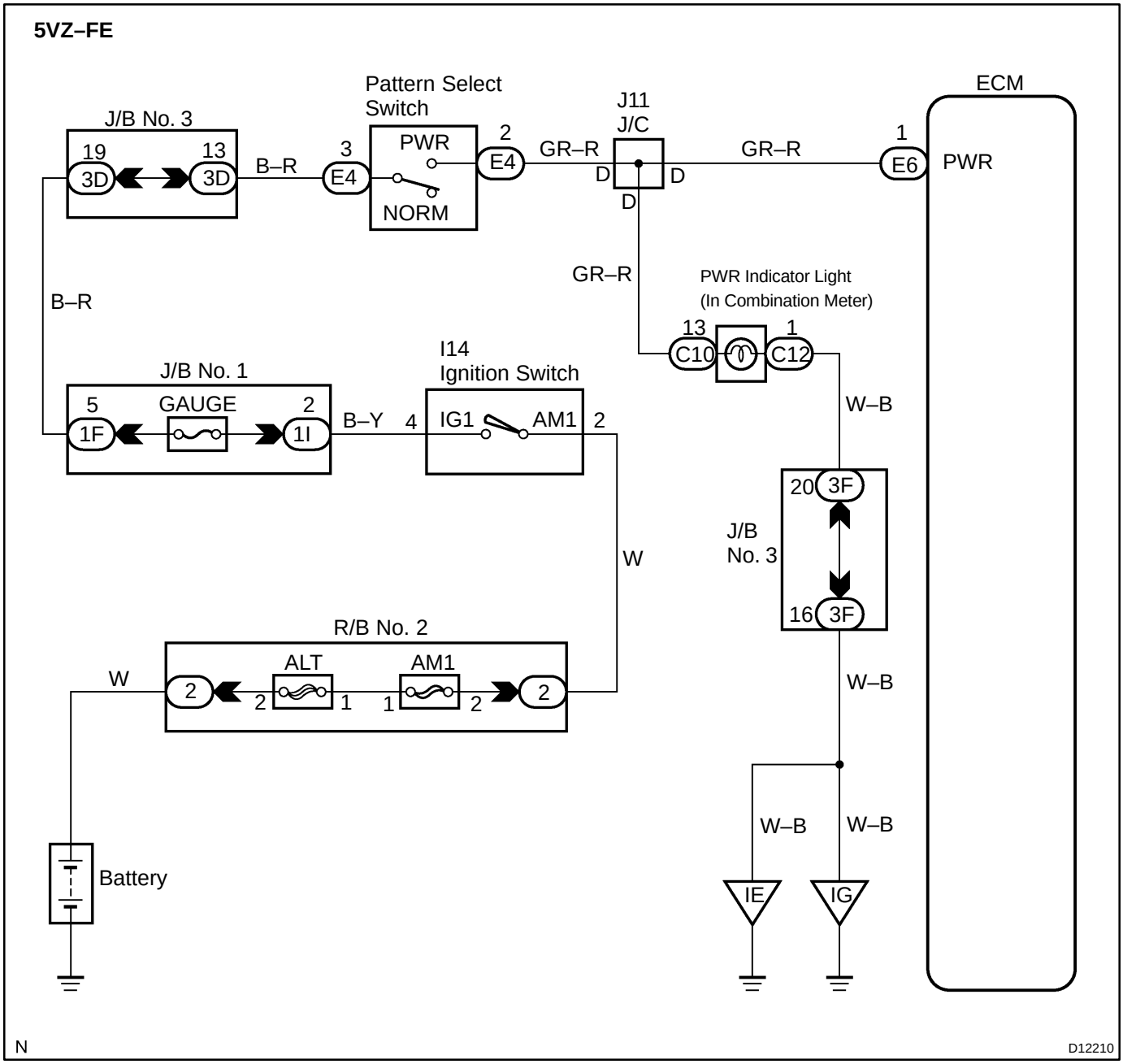
Pattern Select Switch
ECM
J/B No. 3
J11 J/C
19
13
3D
3D
B–R
3
E4
PWR
NORM
2
E4
GR–R
D
D
D
GR–R
1
E6
PWR
GR–R
PWR Indicator Light (In Combination Meter)
B–R
13
C10
1
C12
I14 Ignition Switch
J/B No. 1
5
GAUGE
2
1F
1I
B–Y
4
IG1
AM1
2
W–B
20
3F
J/B No. 3
16
3F
W
R/B No. 2
W
2
ALT
AM1
2
1
1
2
2
W–B
W–B
W–B
Battery
IE
IG
N
D12210

INSPECTION PROCEDURE

1	**Check PATTERN SEL SW signal.**

When using hand–held tester

PREPARATION:

(a) Remove the DLC3 cover.
(b) Connect a hand–held tester to the DLC3.
(c) Turn the ignition switch ON and hand–held tester main switch ON.

CHECK:

Read the PATTERN SEL SW signal on the hand–held tester.

OK:

Pattern select switch	PATTERN SEL SW signal
Pushed in	ON
Pushed out	OFF

When not using hand–held tester

PREPARATION:

Turn the ignition switch ON.

CHECK:

Measure voltage between terminal PWR of ECM and body ground when the pattern select switch is set to the PWR (POWER) position and NORM (NORMAL) position.

OK:

Pattern select switch	Voltage
PWR	10 – 14 V
NORM	Below 1 V

HINT:

The ECM uses the normal pattern signal if the PWR signal is not input.

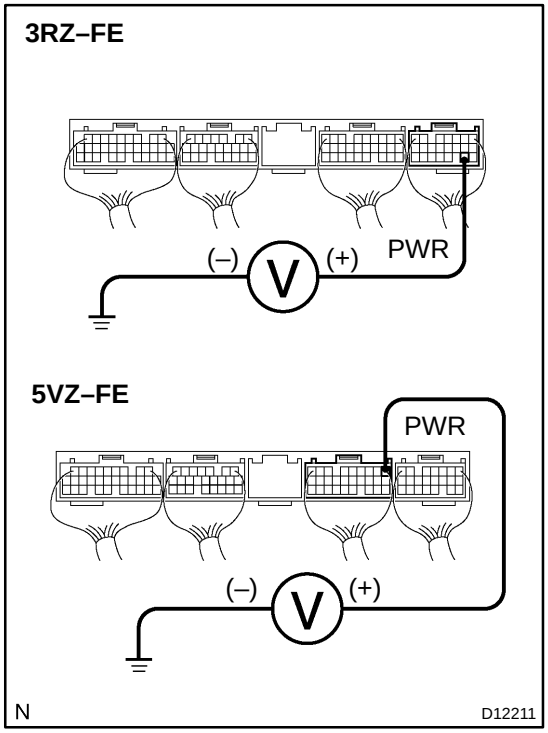

OK → **Proceed to next circuit inspection shown on matrix chart (See page DI–476).**

NG

2	**Check pattern select switch.**

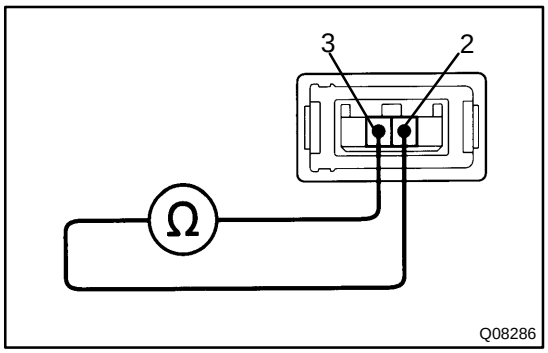

PREPARATION:

Disconnect the pattern select switch connector.

CHECK:

Check continuity between terminals 2 and 3 of pattern select switch connector when the select switch is set to PWR and NORM positions.

OK:

Pattern select switch	Specified condition
PWR	Continuity
NORM	No continuity

NG → **Replace the pattern select switch.**

OK

3	**Check harness and connector between battery and pattern select switch, pattern select switch and ECM (See page IN–28).**

NG → **Repair or replace the harness or connector.**

OK

Check and replace the ECM (See page IN–28).

DI0SS–06

CIRCUIT INSPECTION

DTC	P0500	Vehicle Speed Sensor ”A”

See page 3RZ–FE DI–167, 5VZ–FE DI–378.

DIB1E–01

DTC	P0705	Transmission Range Sensor Circuit Malfunction (PRNDL Input)

DTC	P0850	Park/Neutral Switch Input Circuit

CIRCUIT DESCRIPTION

The park/neutral position switch detects the shift lever position and sends signals to the ECM.

DTC No.	DTC Detection Condition	Trouble Area
P0705	2 or more switches are ON simultaneously at R, N, D, 2 and L positions (2–trip detection logic)	• Short in park/neutral position switch circuit • Park/neutral position switch • ECM
P0850	Park/neutral position switch remaines ON while driving under conditions (a) and (b) for 30 sec. (2–trip detection logic) (a) Vehicle speed: 70 km/h (44 mph) or more (b) Engine speed: 1,500 – 2,500 rpm	

WIRING DIAGRAM

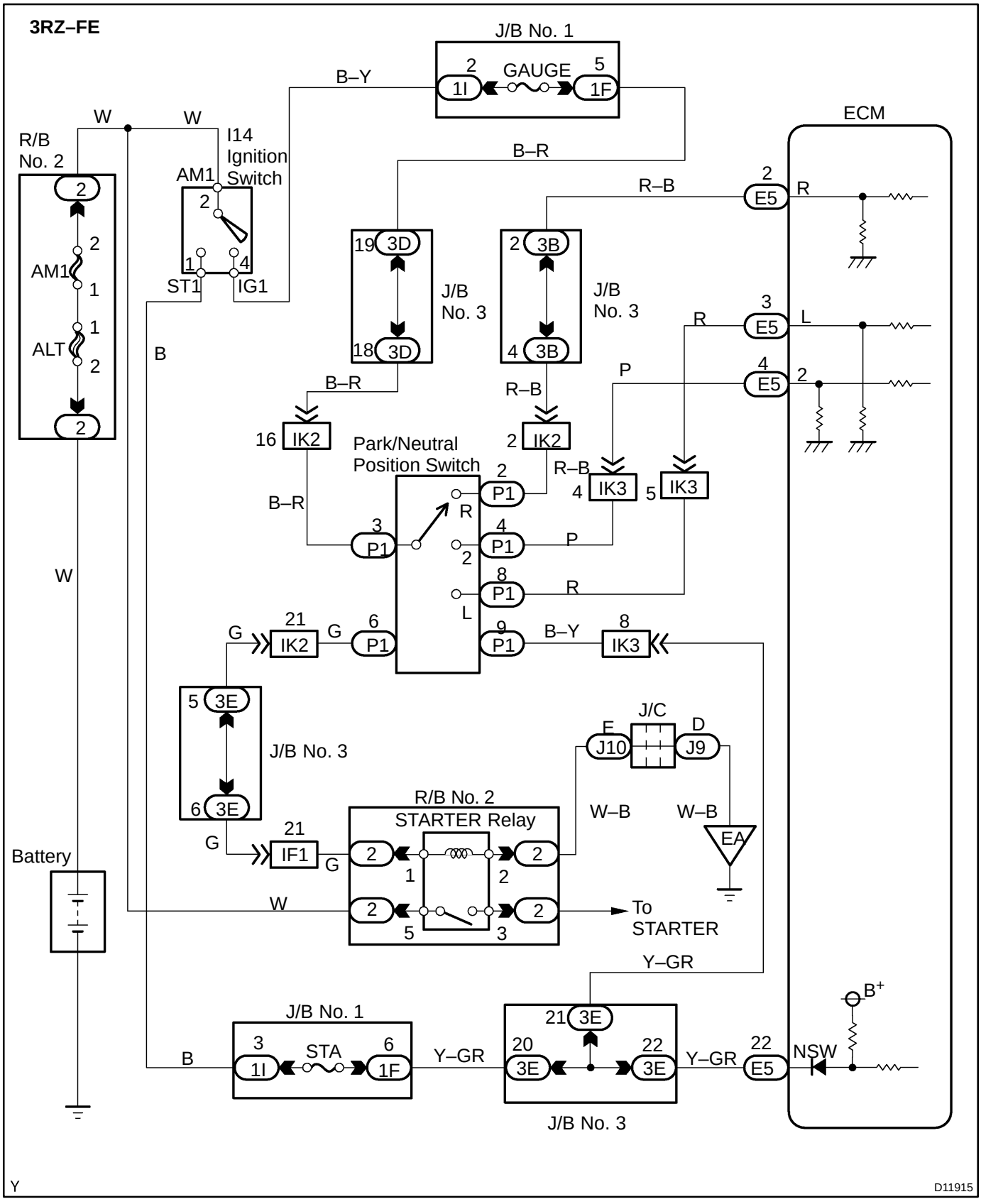

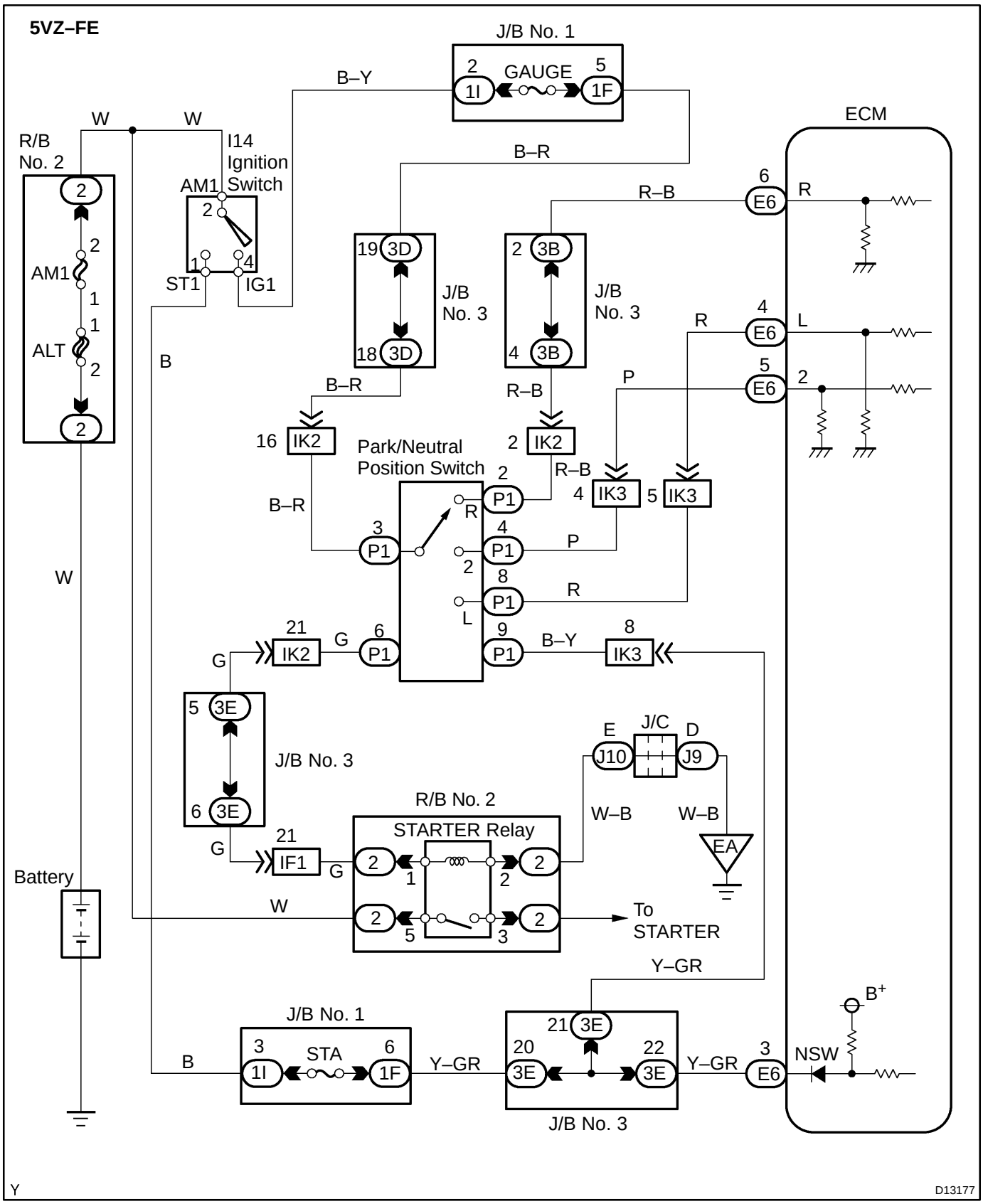
5VZ–FE
J/B No. 1
2
1I
GAUGE
5
1F
B–Y
ECM
W
W
R/B
No. 2
I14
Ignition
Switch
AM1
2
1
4
ST1
IG1
B–R
6
E6
R
R–B
19
3D
18
3D
J/B
No. 3
2
3B
4
3B
J/B
No. 3
R
4
E6
L
5
E6
2
P
B
16
IK2
B–R
Park/Neutral
Position Switch
2
IK2
R–B
2
P1
R
4
IK3
5
IK3
3
P1
4
P1
P
2
8
P1
R
L
9
P1
B–Y
8
IK3
21
IK2
G
6
P1
G
W
AM1
2
1
1
2
ALT
2
2
Battery
5
3E
6
3E
J/B No. 3
E
J/C
D
J10
J9
W–B
W–B
EA
R/B No. 2
STARTER Relay
21
IF1
G
G
2
1
2
2
W
2
5
3
2
To
STARTER
Y–GR
B+
J/B No. 1
21
3E
3
1I
STA
6
1F
B
Y–GR
20
3E
22
3E
Y–GR
3
E6
NSW
J/B No. 3
Y
D13177

INSPECTION PROCEDURE

1	**Read PNP, REVERSE, DRIVE, 2ND and LOW signals.**

When using hand–held tester

PREPARATION:

(a) Remove the DLC3 cover.
(b) Connect a hand–held tester to the DLC3.
(c) Turn the ignition switch ON and hand–held tester main switch ON.

CHECK:

Shift lever into the P, R, N, 2 and L positions, and read the PNP, REVERSE, 2ND and LOW signals on the hand–held tester.

OK:

Shift position	Signal
2	2ND OFF → ON
L	LOW OFF → ON
R	REVERSE OFF → ON
P, N	PNP OFF → ON

When not using hand–held tester

PREPARATION:

Turn the ignition switch ON.

CHECK:

Measure voltage between terminals NSW, 2, L and R of ECM and body ground when the shift lever is shifted to the following positions.

OK:

Position	NSW–Body ground	R–Body ground	2–Body ground	L–Body ground
P,N	0 V	0 V	0 V	0 V
R	7.5 – 14 V*	7.5 – 14 V*	0 V	0 V
D	7.5 – 14 V	0 V	0 V	0 V
2	7.5 – 14 V	0 V	7.5 – 14 V	0 V
L	7.5 – 14 V	0 V	0 V	7.5 – 14 V

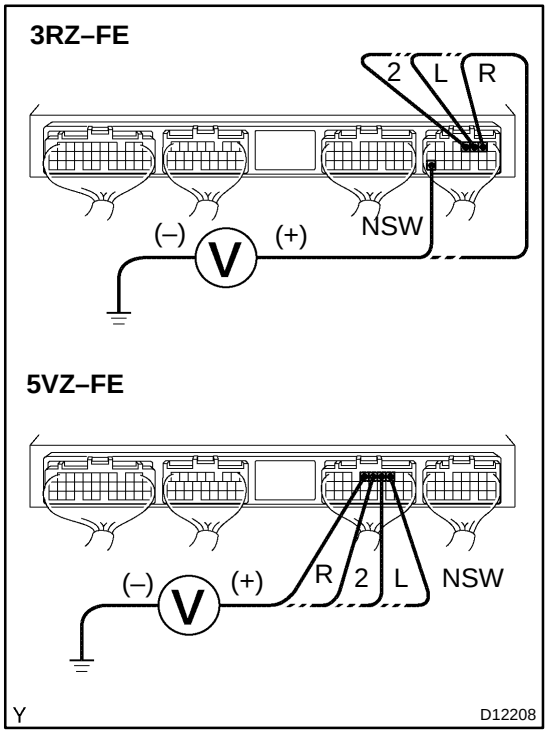

HINT:

*: The voltage will drop slightly due to lighting up of the back up light.

OK → **Check and replace the ECM (See page IN–28).**

NG

2	Check park/neutral position switch.

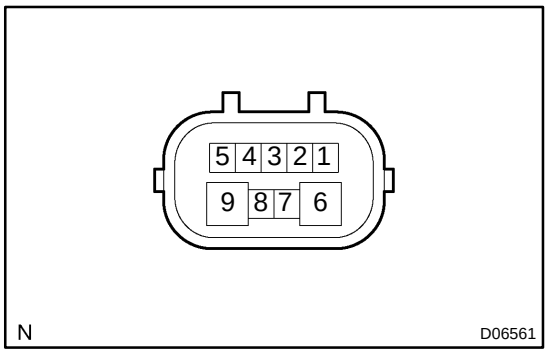

PREPARATION:

Remove the park/neutral position switch.

CHECK:

Check the continuity between the switch terminals when operating the switch lever, as shown in the table below.

OK:

Switch Position	Terminal No.	Specified Condition
R	6 – 3	Contuinuity
Except R		No contuinuity
D	7 – 3	Contuinuity
Except D		No contuinuity
2	4 – 3	Contuinuity
Except 2		No contuinuity
L	8 – 3	Contuinuity
Except L		No contuinuity
P and N	9 – 6	Contuinuity
Except P and N		No contuinuity

NG → **Replace park/neutral position switch (See page AT–9).**

OK ↓

3	Check harness and connector between ECM and park/neutral position switch.

NG → **Repair or replace harness and connector.**

OK ↓

Check and replace the ECM (See page IN–28).

DIB1F–01

DTC	P0710	Transmission Fluid Temperature Sensor ”A” Circuit

DTC	P0712	Transmission Fluid Temperature Sensor ”A” Circuit Low Input (Onry for 5VZ–FE)

DTC	P0713	Transmission Fluid Temperature Sensor ”A” Circuit High Input (Onry for 5VZ–FE)

CIRCUIT DESCRIPTION

The ATF temperature sensor converts fluid temperature value into a resistance value which is input into the ECM.

DTC No.	DTC Detecting Condition	Trouble Area
P0710	Either (a) or (b) is detected momentary within 0.5 sec. when neither P0712 or P0713 is not detected (a) ATF temperature sensor resistance is less than 79 Ω. (b) ATF temperature sensor resistance is more than 156 kΩ.	• Open or short in ATF temperature sensor circuit • ATF temperature sensor • ECM
P0712	ATF temperature sensor resistance is less than 79 Ω. for 0.5 sec. or more	
P0713	ATF temperature sensor resistance is more than 156 kΩ. for 0.5 sec. or more	

WIRING DIAGRAM

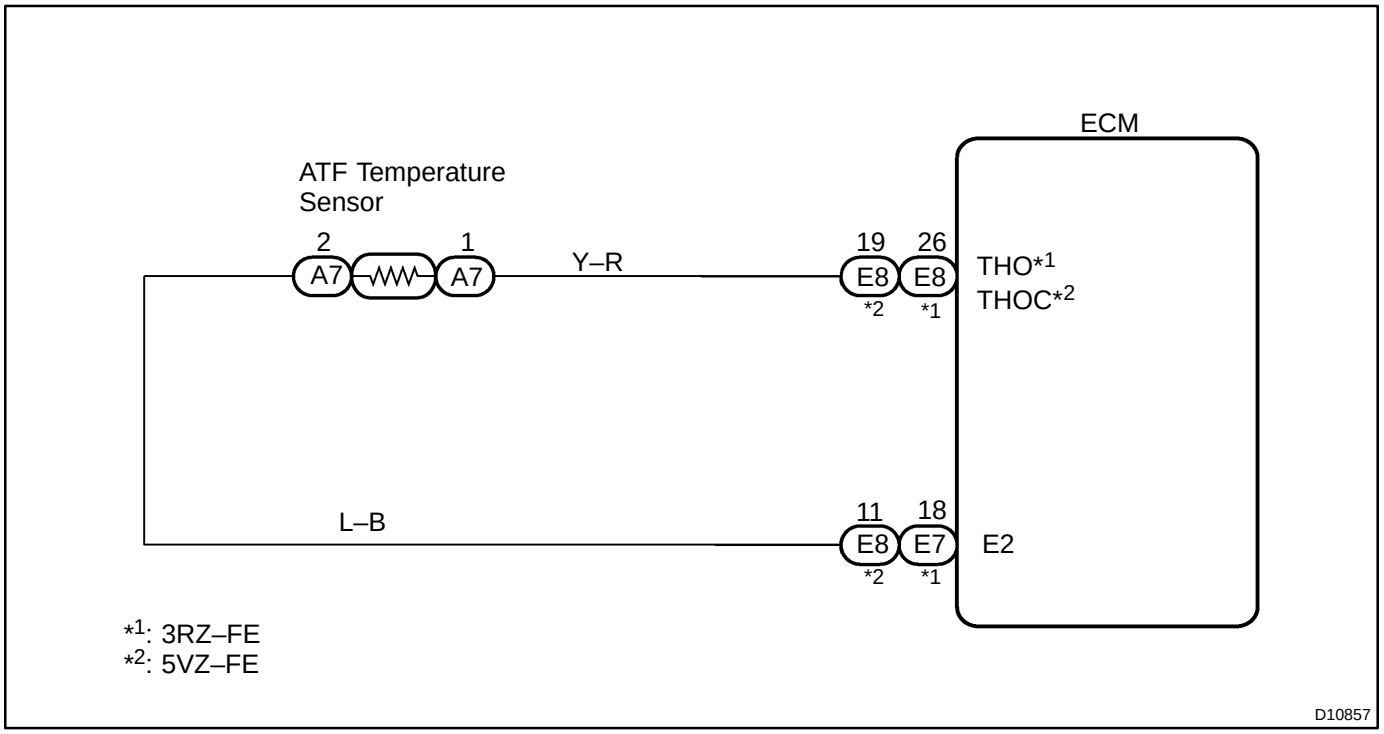

INSPECTION PROCEDURE

1	**Check ATF temperature sensor.**

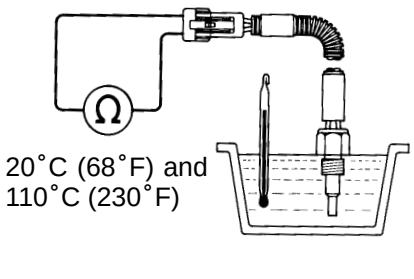

PREPARATION:
Remove the ATF temperature sensor.
CHECK:
Measure resistance between terminals of ATF temperature sensor at 20 ˚C (68 ˚F) and 110 ˚C (230 ˚F).
OK:

Resistance (Approx.):
20 ˚C (68 ˚F): 12.1 kΩ
110 ˚C (230 ˚F): 790 Ω

NG → **Replace the ATF temperature sensor.**

OK

2	**Check harness and connector between ATF temperature sensor and ECM (See page IN–28).**

NG → **Repair or replace the harness or connector.**

OK

Check and replace the ECM (See page IN–28).

DIB1G–01

DTC	P0722	Output Speed Sensor

CIRCUIT DESCRIPTION

The No. 2 vehicle speed sensor detects the rotation speed of the transmission output shaft and sends signals to the ECM. The ECM determines the vehicle speed, based on these signals. An AC voltage is generated in the No. 2 vehicle speed sensor coil as the rotor mounted on the output shaft rotates, and this voltage is sent to the ECM. The gear shift point and lock–up timing are controlled by the ECM, based on the signals from this vehicle speed sensor and the throttle position sensor. If the No. 2 vehicle speed sensor malfunctions, the ECM uses input signals from the No. 1 vehicle speed sensor as a back–up signal.

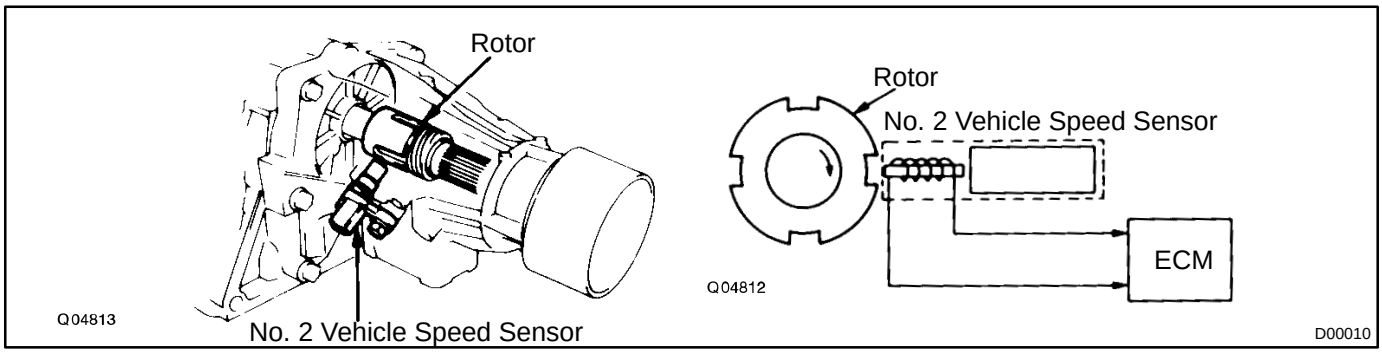

DTC No.	DTC Detection Condition	Trouble Area
P0722	All conditions below are detected 500 times or more continuously (2–trip detection logic) (a) No signal is input to ECM from No. 2 vehicle speed sensor while 4 pulses of No. 1 vehicle speed sensor signal are sent (b) Vehicle speed is 9 km/h (6 mph) or more for at least 4 sec. (c) Park/neutral position switch is OFF. (d) Transfer position is except neutral (4WD).	• Open or short in No. 2 vehicle speed sensor circuit • No. 2 vehicle speed sensor • ECM

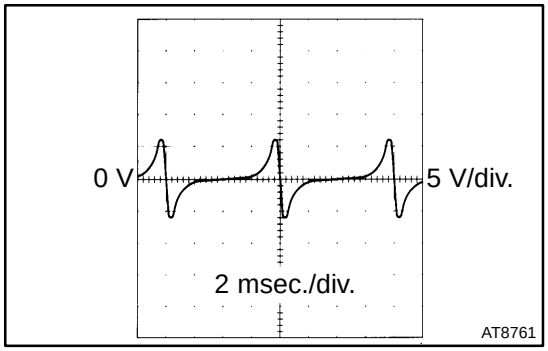

HINT:

The waveform between terminals $SP2^{+}$ and $SP2^{-}$ when vehicle speed is approx. 60 km/h (37 mph) is shown on the left.

WIRING DIAGRAM

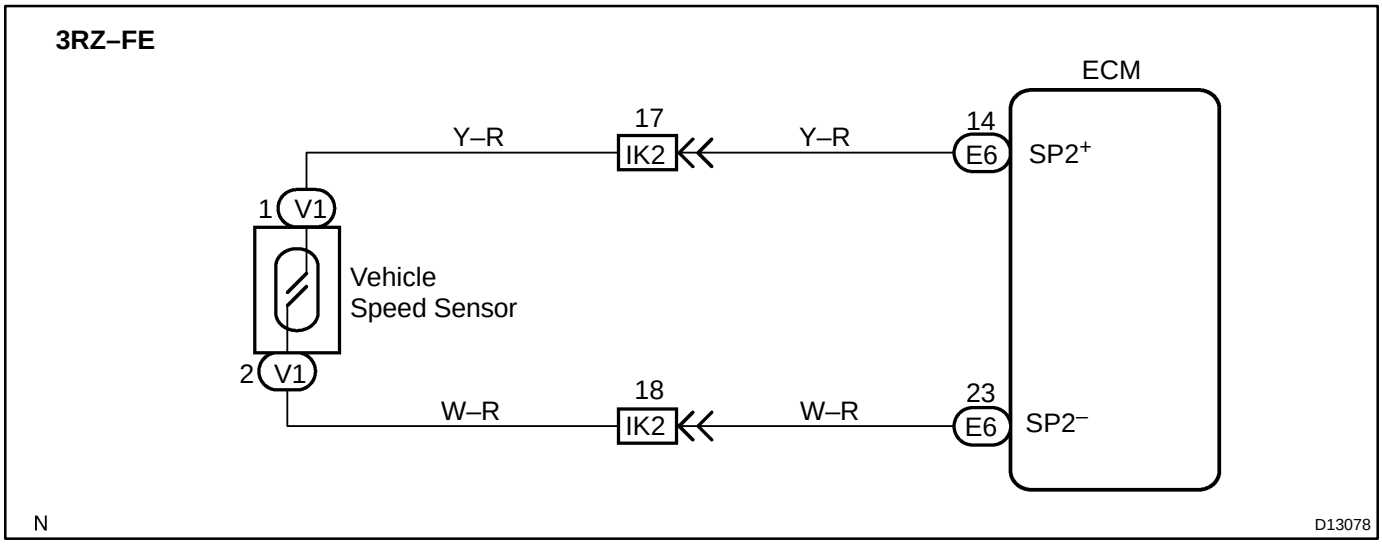

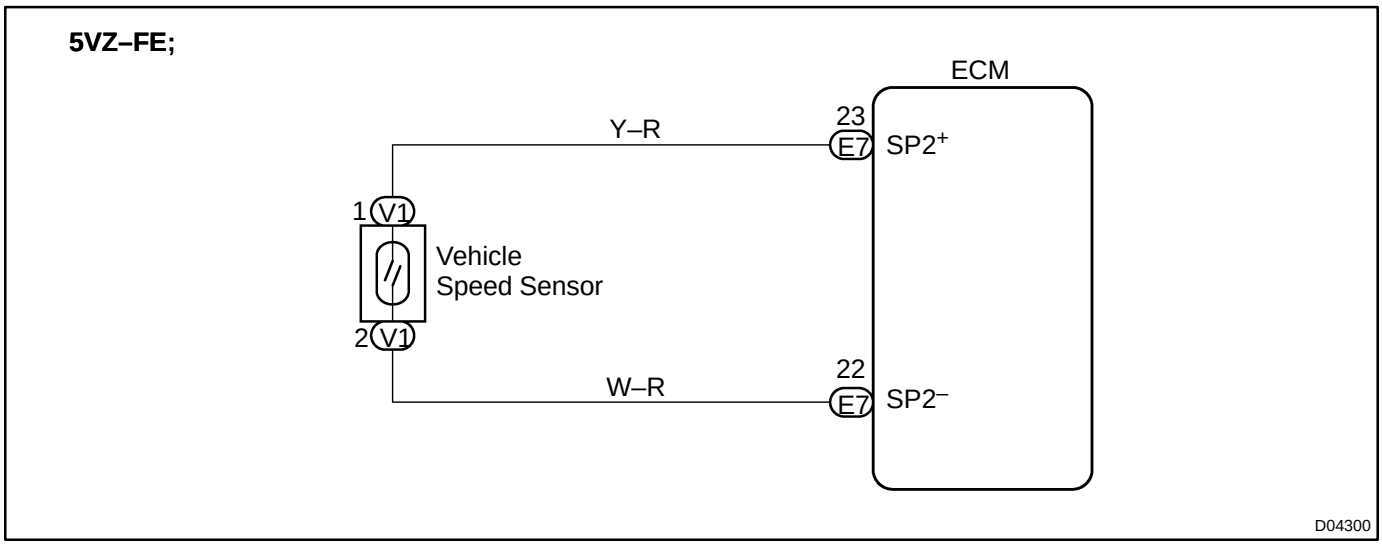

INSPECTION PROCEDURE

HINT:

When using the hand–held tester, start the inspection from step 1. When not using the hand–held tester, start from step 2.

1	**Read value of SPD (SP2) on hand–held tester.**

PREPARATION:
(a) Connect the hand–held tester to the DLC3.
(b) Start the engine.
(c) Turn the hand–held tester main switch ON.
CHECK:
Drive the vehicle and read the SPD value.
OK:
Vehicle speed matches SPD value.

2	**Check No. 2 vehicle speed sensor.**

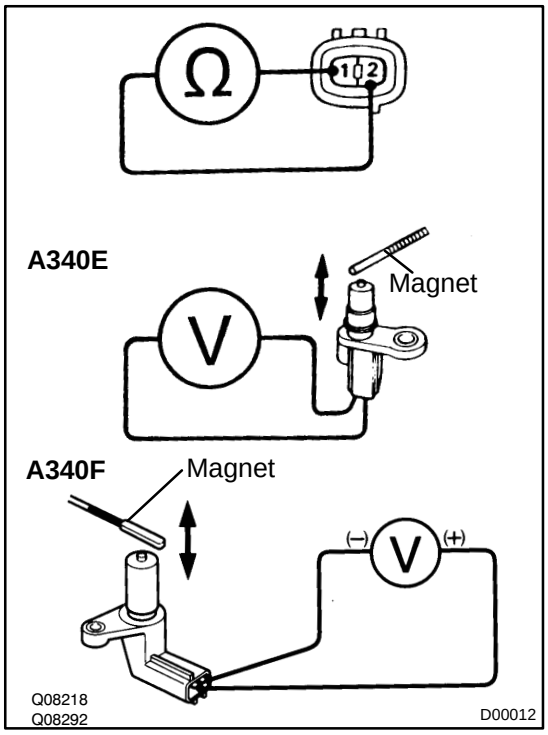

PREPARATION:
Remove the No. 2 vehicle speed sensor.
CHECK:
(a) Measure the resistance between the sensor terminals.
Standard: 560 – 680 Ω at 20 ˚C (68 ˚F)
(b) Measure the voltage between the sensor terminals when a magnet is put close to the front end of the sensor then taken away quickly.
Standard: Sensor generates voltage intermittently.
HINT:
The generated voltage is extremely low.
OK:
Standard.

NG → **Replace No. 2 vehicle speed sensor.**

OK

3	**Check harness and connector between ECM and No. 2 vehicle speed sensor.**

NG → **Repair or replace harness and connector.**

OK

Check and replace the ECM (See page IN–28).

DIB1H–01

DTC	P0724	Brake Switch ”B” Circuit High

CIRCUIT DESCRIPTION

The purpose of this circuit is to prevent the engine from stalling, when brakes are suddenly applied while the vehicle is driven under the lock–up condition.
When the brake pedal is operated, this switch sends a signal to the ECM. Then the ECM cancels the operation of the lock–up clutch while braking is in progress.

DTC No.	DTC Detection Condition	Trouble Area
P0724	Stop light switch remains ON while vehicle is running (2–trip detection logic)	• Short in stop light switch signal circuit • Stop light switch • ECM

WIRING DIAGRAM

See page 3RZ–FE DI–182, 5VZ–FE DI–397.

INSPECTION PROCEDURE

See page 3RZ–FE DI–182, 5VZ–FE DI–397.

DTC	P0741	Torque Converter Clutch Solenoid Performance (Shift Solenoid Valve SL)

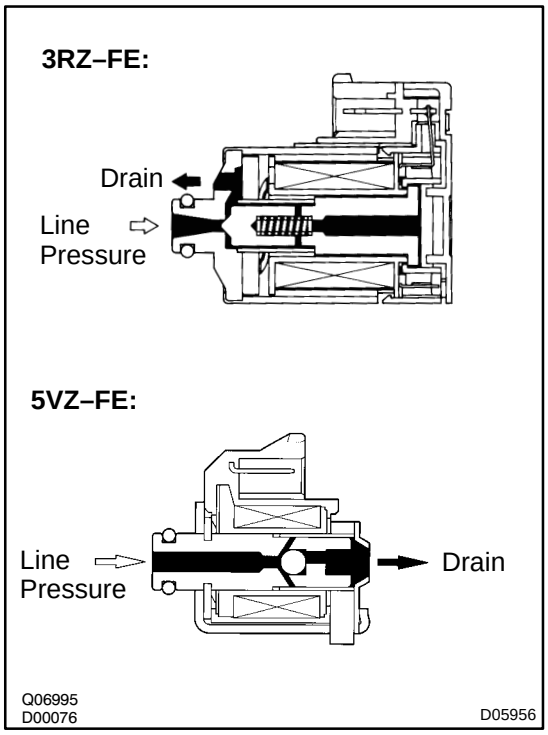

SYSTEM DESCRIPTION

The ECM uses the signals from the throttle position sensor, air–flow meter and crankshaft position sensor to monitor the engagement condition of the lock–up clutch.

Then the ECM compares the engagement condition of the lock–up clutch with the lock–up schedule in the ECM memory to detect a mechanical trouble of the shift solenoid valve SL, valve body and torque converter clutch.

DTC No.	DTC Detection Condition	Trouble Area
P0741	Lock–up does not occur when vehicle is driven in the lock–up range (normal driving at 80 km/h [50 mph]), or lock–up remains ON in the lock–up OFF range (2–trip detection logic)	• Shift solenoid valve SL is stuck open or closed • Valve body blocked up or stuck • Lock–up clutch

INSPECTION PROCEDURE

1	Check shift solenoid valve SL operation.

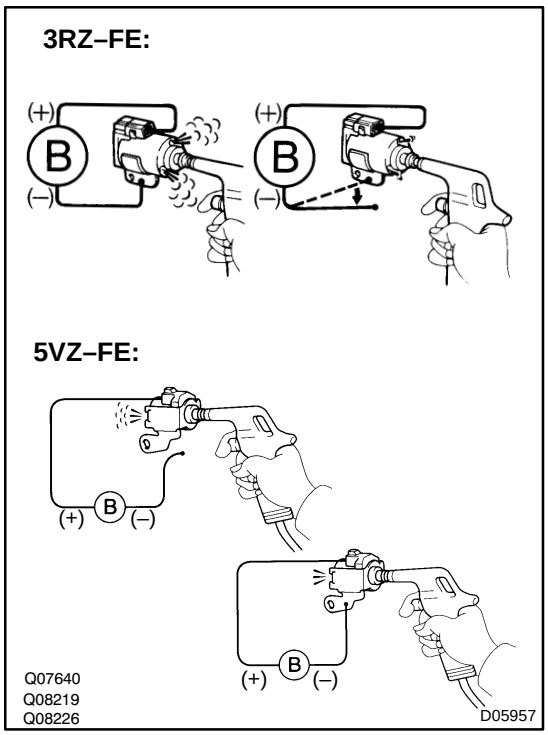

PREPARATION:

(a) Remove the oil pan.

(b) Remove the shift solenoid valve SL.

CHECK:

(a) Apply the 490 kPa (5 kgf/cm^2, 71 psi) of compressed air to check that the solenoid valve does not leak air.

(b) When battery voltage is applied to the shift solenoid valve, check that the solenoid valve opens.

OK:

(a): Solenoid valve does not leak air.

(b): Solenoid valve opens.

NG → **Replace solenoid valve SL.**

OK

2	Check valve body (See page DI–476).

NG → **Repair or replace valve body.**

OK

Replace torque converter clutch (See page AT–22 or AT–28).

DIB1I–01

DTC	P0743	Torque Converter Clutch Circuit Electrical

CIRCUIT DESCRIPTION

The shift solenoid valve SL is turned ON and OFF by signals from the ECM to control the hydraulic pressure acting on the lock–up relay valve, which then controls the operation of the lock–up clutch.

DTC No.	DTC Detection Condition	Trouble Area
P0743	• ECM detects open in solenoid SL circuit 4 times when solenoid SL is not operated (2–trip detection logic) • ECM detects short in solenoid SL circuit 4 times when solenoid SL is operated (2–trip detection logic)	• Open or short in shift solenoid valve SL circuit • Shift solenoid valve SL • ECM

Fail safe function

If the ECM detects a malfunction, it turns the shift solenoid valve SL OFF.

WIRING DIAGRAM

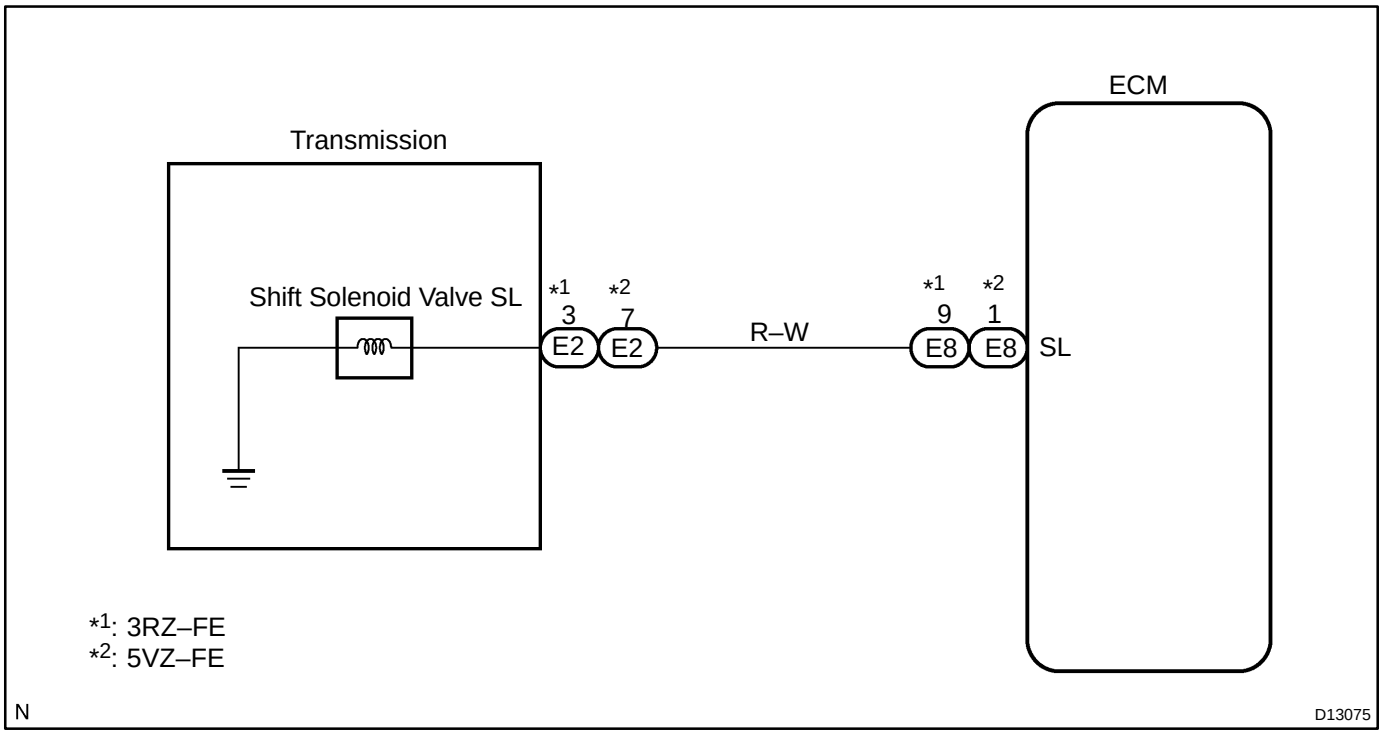

INSPECTION PROCEDURE

1	**Measure resistance between terminal SL of ECM and body ground.**

3RZ–FE

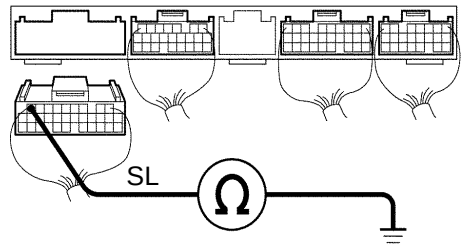

5VZ–FE

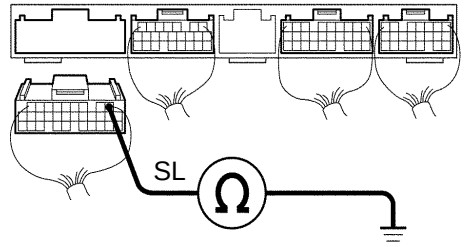

P D12440

PREPARATION:

Disconnect the connector from ECM.

CHECK:

Measure resistance between terminal SL of ECM and body ground.

OK:

Resistance: 11 – 15 Ω

NG

OK → **Check and replace the ECM (See page IN–28).**

2	Check harness and connector between ECM and automatic transmission solenoid connector.

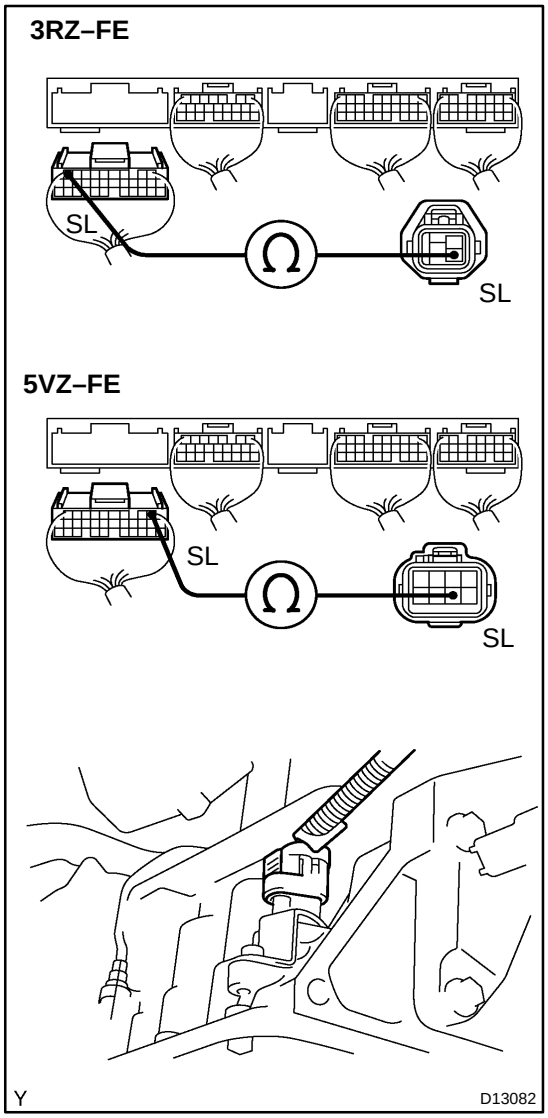

PREPARATION:

Disconnect the solenoid connector from the transmission.

CHECK:

Check the harness between terminal SL of ECM and terminal SL of automatic transmission solenoid connector.

OK:

There is no open or short circuit.

NG → **Repair or replace the harness or connector between ECM and automatic transmission solenoid connector.**

OK

3	Check shift solenoid valve SL.

3RZ–FE:

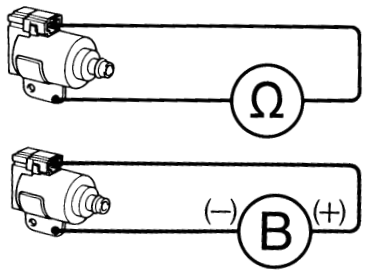

5VZ–FE:

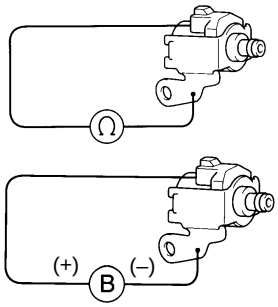

D00005
D03074
D05955

PREPARATION:

(a) Remove the oil pan.

(b) Remove the shift solenoid valve SL.

CHECK:

(a) Measure the resistance between the solenoid connector terminal and the body ground.

Standard: 11 – 15 Ω at 20°C (68°F)

(b) Connect the battery positive lead to the solenoid connector terminal and the battery negative lead to the solenoid body ground.

Standard: Solenoid operation noise is produced.

OK:

Standard.

NG → **Replace shift solenoid valve SL.**

OK

Check and replace the ECM (See page IN–28).

DTC	P0751	Shift Solenoid ”A” Performance (Shift Solenoid Valve S1)

DTC	P0756	Shift Solenoid ”B” Performance (Shift Solenoid Valve S2)

SYSTEM DESCRIPTION

The ECM uses signals from the vehicle speed sensor and direct clutch speed sensor to detect the actual gear position (the 1st, 2nd, 3rd or O/D gear). Then the ECM compares the actual gear with the shift schedule in the ECM memory to detect mechanical troubles of the shift solenoid valves, valve body or automatic transaxle (clutch, brake or gear etc.).

DTC No.	DTC Detecting Condition	Trouble Area
P0751	The gear required by the ECM does not match the actual gear when vehicle is driven (2–trip detection logic)	• Shift solenoid valve No.1 is stuck open or closed • Valve body is blocked up or stuck • Automatic transaxle (clutch, brake or gear etc.)
P0756		• Shift solenoid valve No.2 is stuck open or closed • Valve body is blocked up or stuck • Automatic transaxle (clutch, brake or gear etc.)

INSPECTION PROCEDURE

HINT:

Check the shift solenoid valve No. 1 when DTC P0751 is output. Check the shift solenoid valve No. 2 when DTC P0756 is output.

1	**Check shift solenoid valve No. 1 or No. 2 operation.**

3RZ–FE:

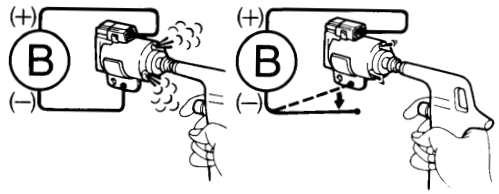

5VZ–FE:

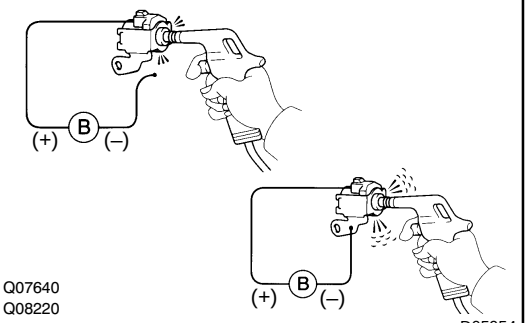

Q07640
Q08220
Q08221

D05954

PREPARATION:

(a) Remove the oil pan.

(b) Remove the shift solenoid valve No. 1 or No. 2.

CHECK:

(a) Apply 490 kPa (5 kgf/cm^2, 71 psi) of compressed air to check that the solenoid valve does not leak air.

(b) When battery positive voltage is applied to the shift solenoid valve, check that the solenoid valve opens.

OK:

(a): Solenoid valve does not leak air.

(b): Solenoid valve opens.

NG → **Replace shift solenoid valve No. 1 or No. 2.**

OK

2	**Check valve body (See page AT–10).**

NG → **Repair or replace valve body.**

OK

Repair or replace transmission (See page AT–22 or AT–28).

DIB1J–01

DTC	P0753	Shift Solenoid ”A” Electrical

DTC	P0758	Shift Solenoid ”B” Electrical

CIRCUIT DESCRIPTION

Shifting from 1st to O/D is done in combination with ON and OFF of the shift solenoid valves No. 1 and No. 2 controlled by ECM. If an open or short circuit occurs in either of the shift solenoid valves, the ECM controls the remaining normal shift solenoid valve to allow the vehicle to be operated safely (Fail safe function).

Position	NORMAL			SHIFT SOLENOID NO.1 MALFUNCTIONING			SHIFT SOLENOID NO.2 MALFUNCTIONING			BOTH SOLENOIDS MALFUNCTIONING
	Solenoid valve		Gear	Solenoid valve		Gear	Solenoid valve		Gear	Gear when shift selector is manually operated
	No.1	No.2		No.1	No.2		No.1	No.2		
D	ON	OFF	1st	X	ON	3rd	ON	X	1st	O/D
	ON	ON	2nd	X	ON	3rd	OFF	X	O/D	O/D
	OFF	ON	3rd	X	ON	3rd	OFF	X	O/D	O/D
	OFF	OFF	O/D	X	OFF	O/D	OFF	X	O/D	O/D
2	ON	OFF	1st	X	ON	3rd	ON	X	1st	3rd
	ON	ON	2nd	X	ON	3rd	OFF	X	3rd	3rd
	OFF	ON	3rd	X	ON	3rd	OFF	X	3rd	3rd
L	ON	OFF	1st	X	OFF	1st	ON	X	1st	1st
	ON	ON	2nd	X	ON	2nd	ON	X	1st	1st

X: Malfunctions

HINT:

Check the shift solenoid valve No. 1 when DTC P0753 is output and check the shift solenoid valve No. 2 when DTC P0758 is output.

DTC No.	DTC Detection Condition	Trouble Area
P0753 P0758	The ECM checks for an open or short circuit in the shift solenoid valves No. 1 and No. 2 circuit when it changes gear position. The ECM records DTC P0753 or P0758 if condition (a) or (b) is detected once, but it does not light up MIL. After ECM detects condition (a) or (b) continuously 8 times or more in one–trip, it causes the MIL to light up until condition (a) or (b) disappears. After that, if the ECM detects condition (a) or (b) once, it starts lighting up MIL again. (a) Solenoid resistance is 8 Ω or less (short circuit) when the solenoid is energized. (b) Solenoid resistance is 100 kΩ or more (open circuit) when the solenoid is not energized.	• Open or short in shift solenoid valve No. 1/No. 2 circuit. • Shift solenoid valve No. 1/No. 2 • ECM

Fail safe function:
If either of the shift solenoid valve circuits develops an open or short, the ECM turns the other shift solenoid ON and OFF to shift to the gear positions shown in the table above. The ECM also turns the shift solenoid valve SL OFF at the same time. If both solenoids are malfunctioning, hydraulic control cannot be done electronically so it must be done manually.
Manual shifting as shown in the following table must be done (In the case of a short circuit, the ECM stops sending current to the short circuited solenoid).

WIRING DIAGRAM

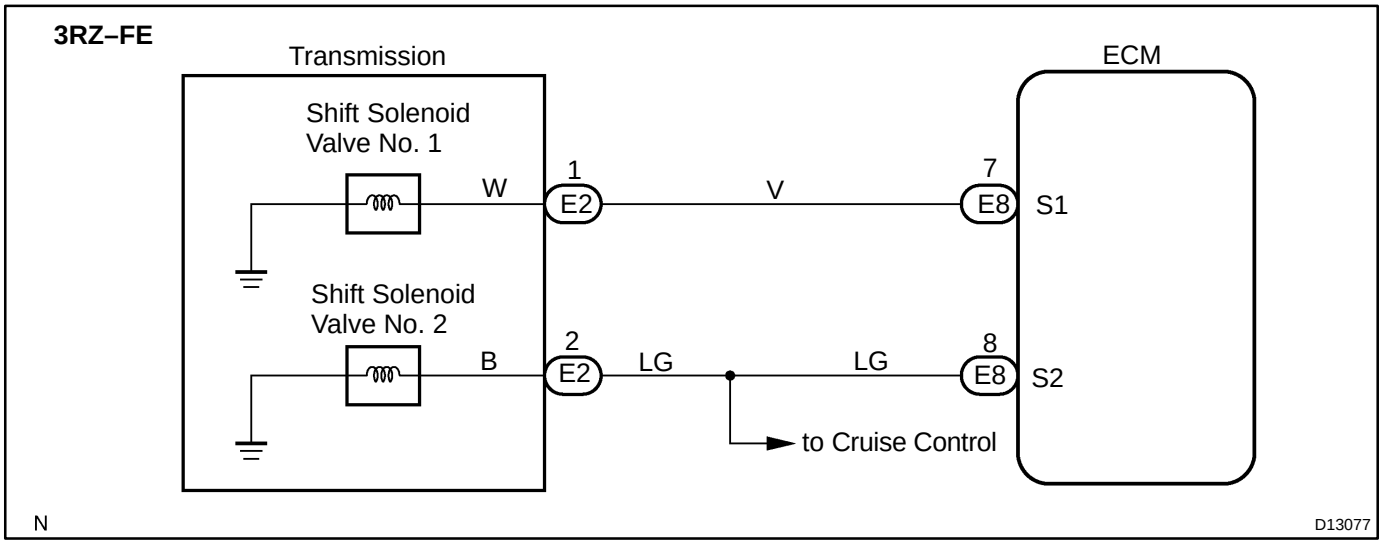

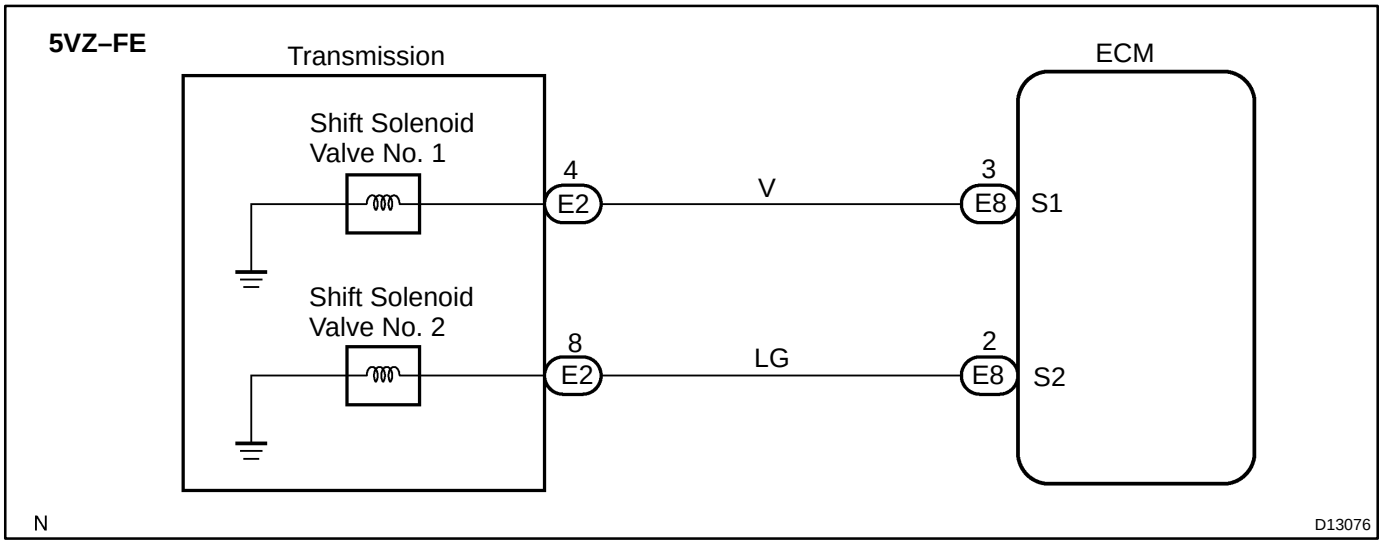

INSPECTION PROCEDURE

1	**Measure resistance between terminal S1 or S2 of ECM and body ground.**

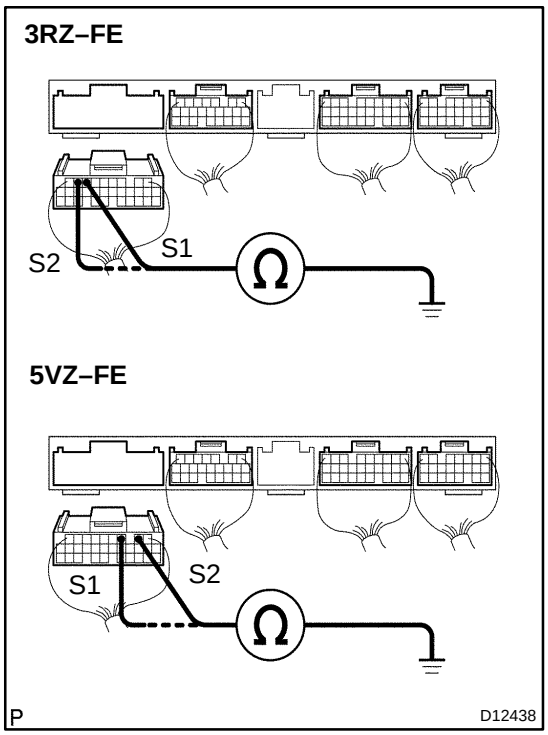

PREPARATION:

Disconnect the connector from ECM.

CHECK:

Measure resistance between terminal S1 or S2 of ECM and body ground.

OK:

Resistance: 11 – 15 Ω

NG

OK → **Check and replace the ECM (See page IN–28).**

2	**Check harness and connector between ECM and automatic transmission solenoid connector.**

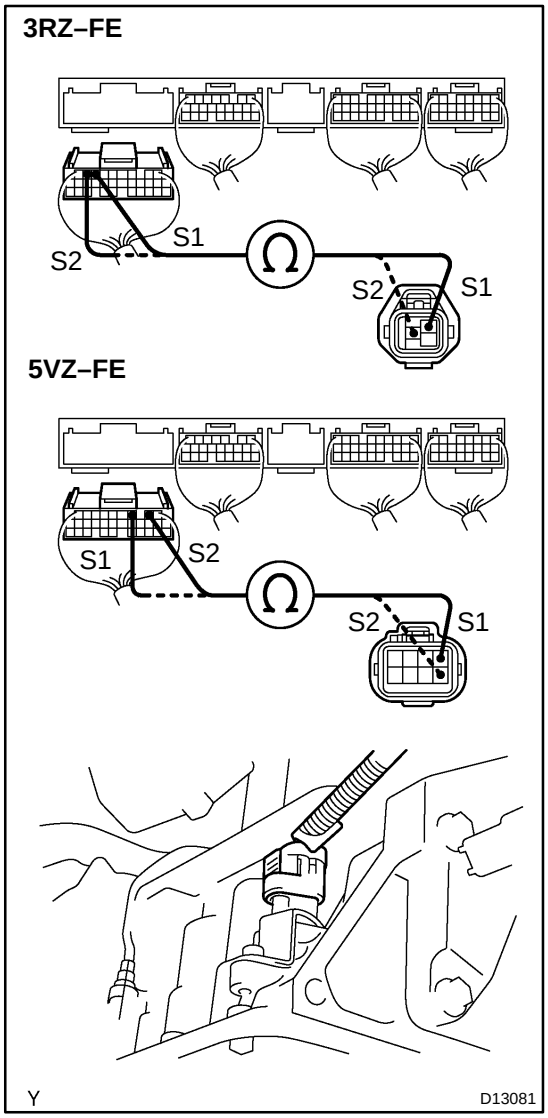

PREPARATION:

Disconnect the solenoid connector from the automatic transmission.

CHECK:

Check the harness and connector between terminal S1 or S2 of ECM and terminal S1 or S2 of solenoid connector.

OK:

There is no open and no short circuit.

NG → **Repair or replace the harness or connector.**

OK

3	Check shift solenoid valve No. 1 or No. 2.

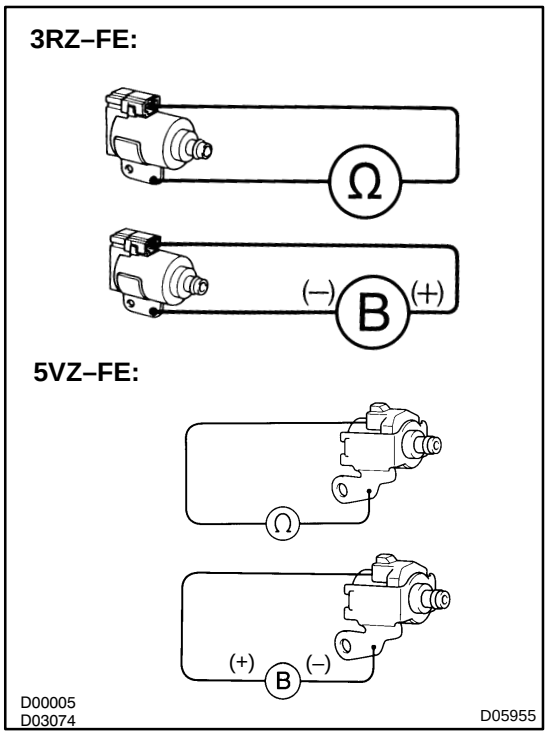

PREPARATION:

(a) Jack up the vehicle.
(b) Remove the oil pan.
(c) Disconnect the solenoid connector.
(d) Remove the shift solenoid valve No. 1 or No. 2.

CHECK:

(a) Measure resistance between solenoid connector and body ground.
(b) Connect positive (+) lead to terminal of solenoid connector, negative (–) lead to solenoid body.

OK:

(a) Resistance: 11 – 15 Ω
(b) The solenoid makes an operating noise.

NG → **Replace the solenoid valve.**

OK

Repair or replace the solenoid wire.

DIB1K–01

DTC	P0818	Driveline Disconnect Switch Input Circuit

CIRCUIT DESCRIPTION

The ECM detects the signal from the transfer neutral position switch.
This DTC indicates that the transfer neutral position switch remains ON.

DTC No.	DTC Detecting Condition	Trouble Area
P0818	Transfer neutral position switch remains ON while vehicle is running under conditions below for 30 sec. (2–trip detection logic) • Vehicle speed is 25 km/h or more • Transfer shift position is H	• Short in transfer neutral position switch circuit • Transfer neutral position switch • ECM

WIRING DIAGRAM

Refer to DTC P1782 on page DI–512.

INSPECTION PROCEDURE

1	**Check park/neutral position switch (See page DI–482).**

NG → **Replace the park/neutral position switch.**

OK

2	Check transfer neutral position switch.

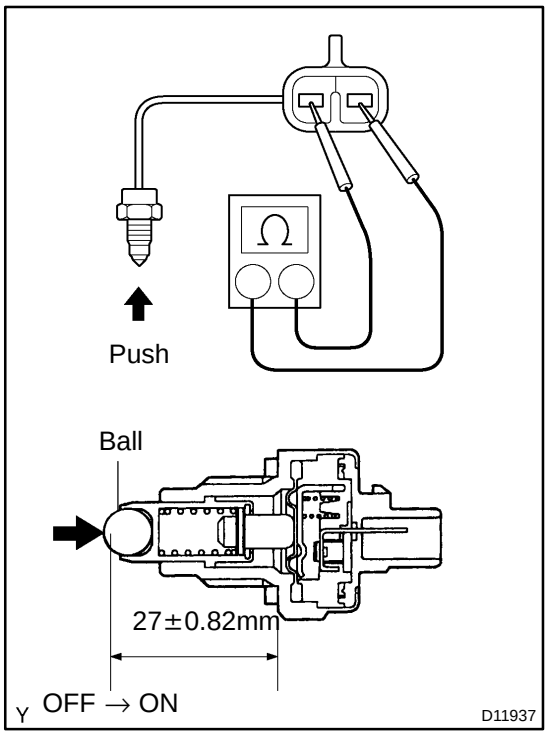

PREPARATION:
Remove the transfer park/neutral position switch (See page TR–10).
CHECK:
Check that there is continuity between terminals, as shown.
OK:

Switch position	Specified condition
Push	Continuity
Free	No continuity

OK → **Replace the transfer neutral position switch.**

NG

3	Check combination meter (See page BE–39).

NG → **Repair or replace the combination meter.**

OK

Check and replace the ECM (See page IN–28).

DIB1L–01

DTC	P0973	Shift Solenoid ”A” Control Circuit Low

DTC	P0974	Shift Solenoid ”A” Control Circuit High

DTC	P0976	Shift Solenoid ”B” Control Circuit Low

DTC	P0977	Shift Solenoid ”B” Control Circuit High

CIRCUIT DESCRIPTION

Shifting from 1st to O/D is performed in combination with ON and OFF of the shift solenoid valves No. 1 and No. 2 controlled by the ECM. If an open or short circuit occurs in either of the shift solenoid valves, the ECM controls the remaining normal shift solenoid valve in order to allow the vehicle to be operated safely (Fail–safe function).

Fail–safe Function:

If either of the shift solenoid valve circuits develops an open or short, the ECM turns the other shift solenoid ON and OFF in order to shift to the gear positions shown in the table below. The ECM also turns the shift solenoid valve SL OFF at the same time. If both solenoids are malfunctioning, hydraulic control cannot be performed electrically but must be done manually. Manual shifting must be performed as shown in the following table (In the case of a short circuit, the ECM stops sending current to the short circuited solenoid).

Position	NORMAL			SHIFT SOLENOID NO. 1 MALFUNCTIONING			SHIFT SOLENOID NO. 2 MALFUNCTIONING			BOTH SOLENOIDS MALFUNCTIONING
	Solenoid valve		Gear	Solenoid valve		Gear	Solenoid valve		Gear	Gear when shift selector is manually operated
	No. 1	No. 2		No. 1	No. 2		No. 1	No. 2		
D	ON	OFF	1st	X	ON	3rd	ON	X	1st	O/D
	ON	ON	2nd	X	ON	3rd	OFF	X	O/D	O/D
	OFF	ON	3rd	X	ON	3rd	OFF	X	O/D	O/D
	OFF	OFF	O/D	X	OFF	O/D	OFF	X	O/D	O/D
2	ON	OFF	1st	X	ON	3rd	ON	X	1st	3rd
	ON	ON	2nd	X	ON	3rd	OFF	X	3rd	3rd
	OFF	ON	3rd	X	ON	3rd	OFF	X	3rd	3rd
L	ON	OFF	1st	X	OFF	1st	ON	X	1st	1st
	ON	ON	2nd	X	ON	2nd	ON	X	1st	1st

X: Malfunctions

DTC No.	DTC Detection Condition	Trouble Area
P0973	ECM detects open in solenoid valve No. 1 circuit 4 times when solenoid valve No. 1 is not operated	• Open in shift solenoid valve No. 1 circuit • Shift solenoid valve No. 1 • ECM
P0974	ECM detects short in solenoid valve No. 1 circuit 4 times when solenoid valve No. 1 is operated	• Short in shift solenoid valve No. 1 circuit • Shift solenoid valve No. 1 • ECM
P0976	ECM detects open in solenoid valve No. 2 circuit 4 times when solenoid valve No. 2 is not operated	• Open in shift solenoid valve No. 2 circuit • Shift solenoid valve No. 2 • ECM
P0977	ECM detects short in solenoid valve No. 2 circuit 4 times when solenoid valve No. 2 is operated	• Short in shift solenoid valve No. 2 circuit • Shift solenoid valve No. 2 • ECM

WIRING DIAGRAM

3RZ–FE

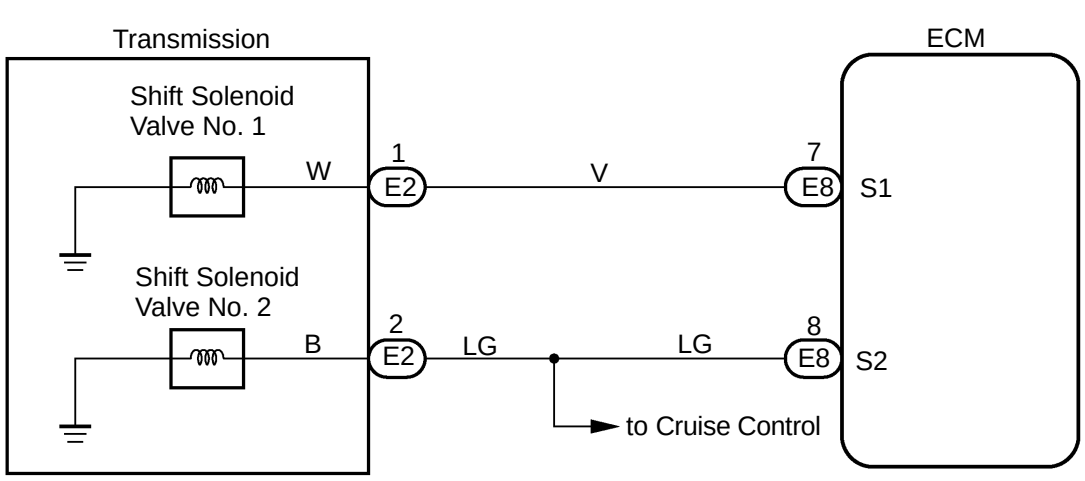

N D13077

5VZ–FE

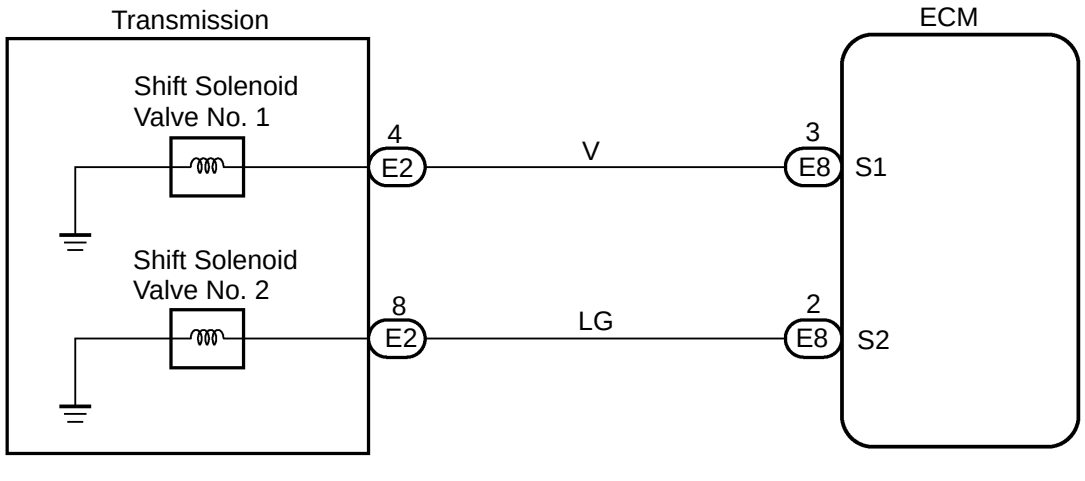

N D13076

HINT:
Check the shift solenoid valve No. 1 when DTC P0973 and P0974 is output. Check the shift solenoid valve No. 2 when DTC P0976 and P0977 is output.

INSPECTION PROCEDURE

1	**Check harness and connector between ECM and shift solenoid valve No. 1 or No. 2.**

NG → **Repair or replace harness or connector.**

OK

2	**Check shift solenoid valve No. 1 or No. 2.**

3RZ–FE:

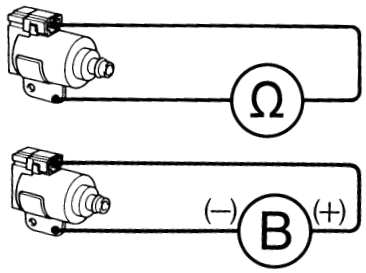

5VZ–FE:

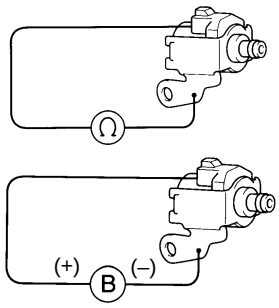

D00005
D03074
D05955

PREPARATION:

(a) Jack up the vehicle.
(b) Remove the oil pan.
(c) Remove the shift solenoid valve No. 1 or No. 2.

CHECK:

(a) Measure the resistance between the solenoid connector terminal and the body ground.
Standard: 11 – 15 Ω at 20˚C (68˚F)
(b) Connect the battery positive lead to the solenoid connector terminal and the battery negative lead to the solenoid body ground.
Standard: Solenoid operation noise is produced.

OK:

Standard.

NG → **Replace solenoid valve.**

OK

Check and replace the ECM (See page IN–28).

CUSTOMER PROBLEM ANALYSIS CHECK

Transmission Control System Check Sheet

Inspector's Name :

Customer's Name		Registration No.	
		Registration Year	/ /
		Frame No.	
Date Vehicle Brought In	/ /	Odometer Reading	km mile

Date Problem Occurred	/ /
How Often Does Problem Occur?	☐ Continuous ☐ Intermittent (times a day)

Symptoms	☐ Vehicle does not move (☐ Any position ☐ Particular position)
	☐ No up–shift (☐ 1st → 2nd ☐ 2nd → 3rd ☐ 3rd → O/D)
	☐ No down–shift (☐ O/D → 3rd ☐ 3rd → 2nd ☐ 2nd → 1st)
	☐ Lock–up malfunction
	☐ Shift point too high or too low
	☐ Harsh engagement (☐ N → D ☐ Lock–up ☐ Any drive position)
	☐ Slip or shudder
	☐ No kick–down
	☐ Others ( )

Check Item	Malfunction Indicator Lamp	☐ Normal ☐ Remains ON

DTC Check	1st Time	☐ Normal code	☐ Malfunction code (Code)
	2nd Time	☐ Normal code	☐ Malfunction code (Code)

DI0SO–24

DIAGNOSTIC TROUBLE CODE CHART

If a DTC is displayed during the DTC check, check the circuit listed for that code in the table below and proceed to the page given.

DTC No. (See Page)	Detection Item	Trouble Condition	MIL *1	Memory
P0500 3RZ–FE: (DI–167) 5VZ–FE (DI–378)	Vehicle Speed Sensor ”A”	• Open or short in No. 1 vehicle speed sensor circuit • No. 1 vehicle speed sensor • Combination meter • ECM	●	○
P0705 (DI–482)	Transmission Range Sensor Circuit Malfunction (PRNDL Input)	• Short in park/neutral position switch circuit • Park/neutral position switch • ECM	●	○
P0710 (DI–487)	Transmission Fluid Temperature Sensor ”A” Circuit	• Open or short in ATF temperature sensor circuit • ATF temperature sensor • ECM	●	○
P0712*3 (DI–487)	Transmission Fluid Temperature Sensor ”A” Circuit Low Input		●	○
P0713*3 (DI–487)	Transmission Fluid Temperature Sensor ”A” Circuit High Input		●	○
P0722 (DI–489)	Output Speed Sensor	• Open or short in No. 2 vehicle speed sensor circuit • No. 2 vehicle speed sensor • ECM	●	○
P0724 3RZ–FE: (DI–182) 5VZ–FE (DI–397)	Brake Switch ”B” Circuit High	• Short in stop light switch circuit • Stop light switch • ECM	●	○
P0741 (DI–494)	Torque Converter Clutch Solenoid Performance (Shift Solenoid Valve SL)	• Shift solenoid valve SL is stuck open or closed • Valve body is blocked up or stuck • Lock–up clutch	●	○
P0743 (DI–496)	Torque Converter Clutch Circuit Electrical	• Open or short in shift solenoid valve SL circuit • Shift solenoid valve SL • ECM	●	○
P0751 (DI–500)	Shift Solenoid ”A” Performance (Sfiht Solenoid Valve S1)	• Shift solenoid valve No. 1 is stuck open or closed • Valve body is blocked up or stuck • Open or short in shift solenoid valve No.1 circuit • Shift solenoid valve No. 1 • ECM	●	○
P0753*2 (DI–502)	Shift Solenoid ”A” Electrical	• Open or short in shift solenoid valve No.1 circuit • Shift solenoid valve No.1 • ECM	●	○
P0756 (DI–500)	Shift Solenoid ”B” Performance (Sfiht Solenoid Valve S2)	• Shift solenoid valve No. 2 is stuck open or closed • Valve body is blocked up or stuck • Open or short in shift solenoid valve No. 2 circuit • Shift solenoid valve No. 2 • ECM	●	○
P0758*2 (DI–502)	Shift Solenoid ”B” Electrical	• Open or short in shift solenoid valve No.2 circuit • Shift solenoid valve No.2 • ECM	●	○

DTC No. (See Page)	Detection Item	Trouble Condition	MIL *1	Memory
P0818 *4 (DI–507)	Driveline Disconnect Switch Input Circuit	• Short in transfer neutral position switch circuit • Transfer neutral position switch • ECM	●	○
P0850 (DI–482)	Park/Neutral Switch Input Circuit	• Short in park/neutral position switch circuit • Park/neutral position switch • ECM	●	○
P0973 *3 (DI–509)	Shift Solenoid ”A” Control Circuit Low	• Open or short in shift solenoid valve No. 1 circuit • Shift solenoid valve No. 1 • ECM	●	○
P0974 *3 (DI–509)	Shift Solenoid ”A” Control Circuit High		●	○
P0976 *3 (DI–509)	Shift Solenoid ”B” Control Circuit Low	• Open or short in shift solenoid valve No. 2 circuit • Shift solenoid valve No. 2 • ECM	●	○
P0977 *3 (DI–509)	Shift Solenoid ”B” Control Circuit High		●	○
P1782 *4 (DI–512)	Transfer L4 Switch Circuit	• Short in transfer L4 position switch circuit • Transfer L4 position switch • ECM	●	○
P2716 *3 (DI–516)	Pressure Contorl Solenoid ”D” Electrical	• Open or short in shift solenoid valve SLT circuit • Shift solenoid valve SLT • ECM	●	○

*1 : ●...MIL light up
*2 : 3RZ–FE only
*3 : 5VZ–FE only
*4 : 4WD only

AUTOMATIC TRANSMISSION (A340E, A340F)

DI0SL–38

HOW TO PROCEED WITH TROUBLESHOOTING

Items inside ▱ are titles of pages in this manual, with the page number indicated in the bottom portion. See the indicated pages for detailed explanations.

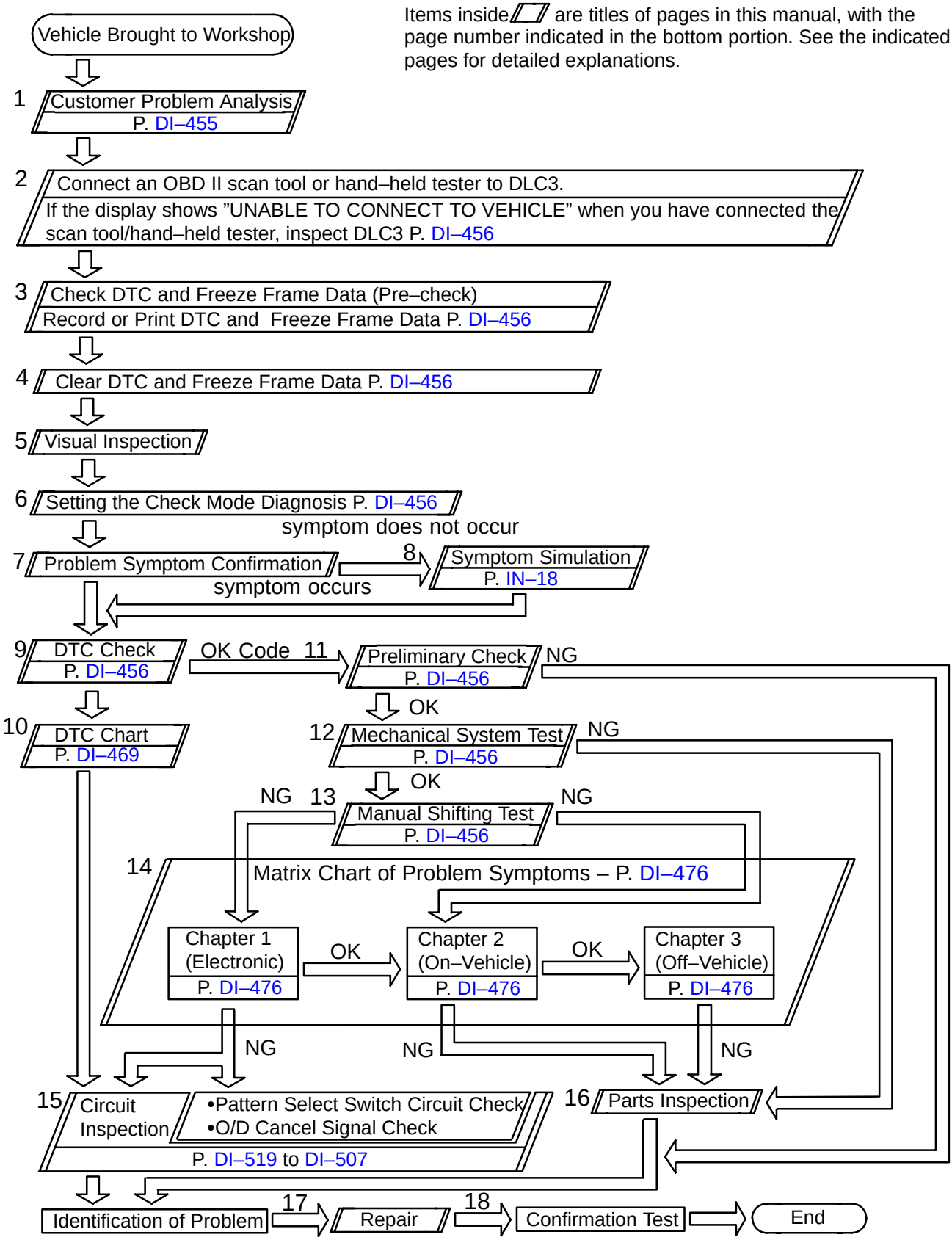

DI0SP–11

PARTS LOCATION

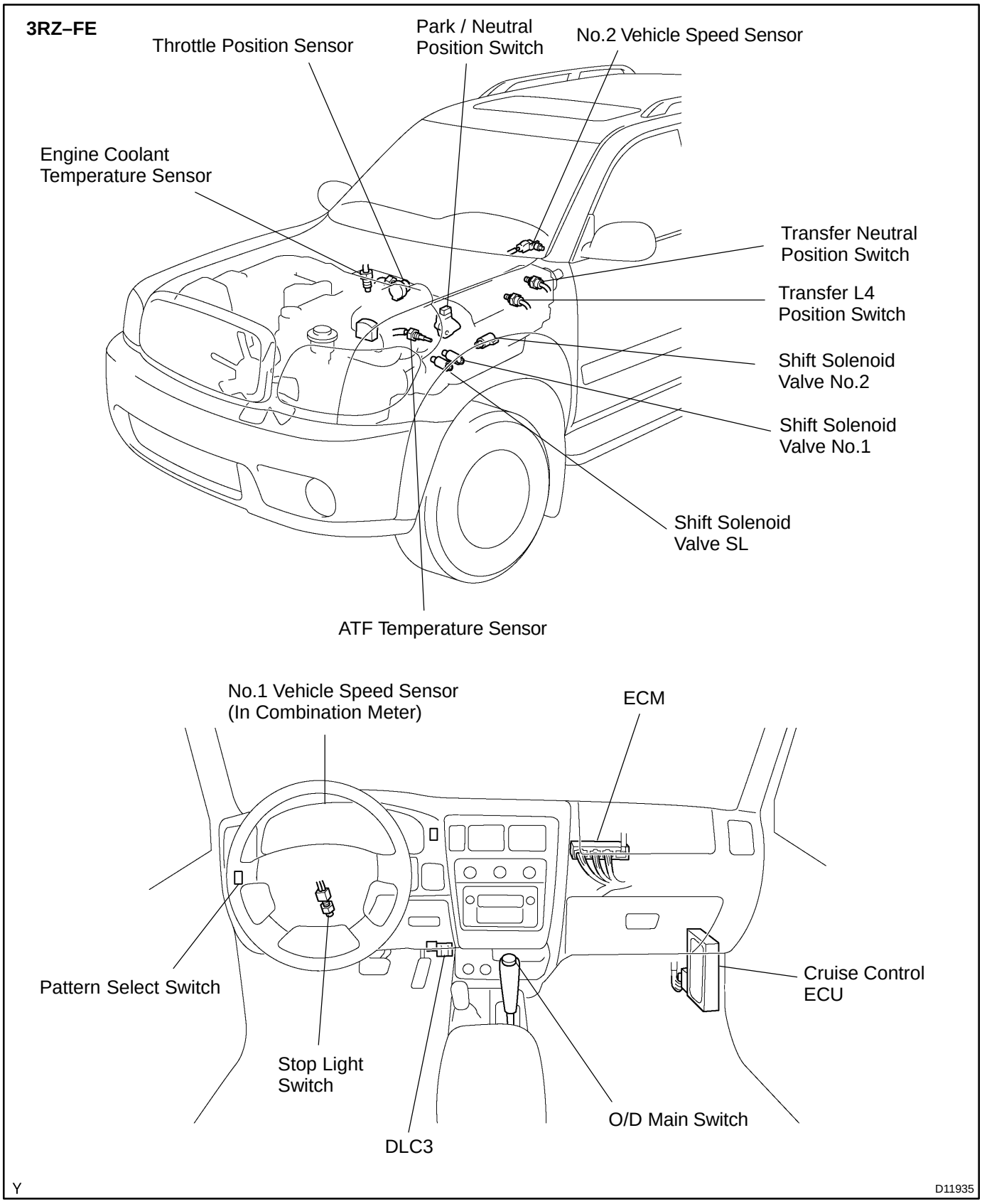

5VZ–FE

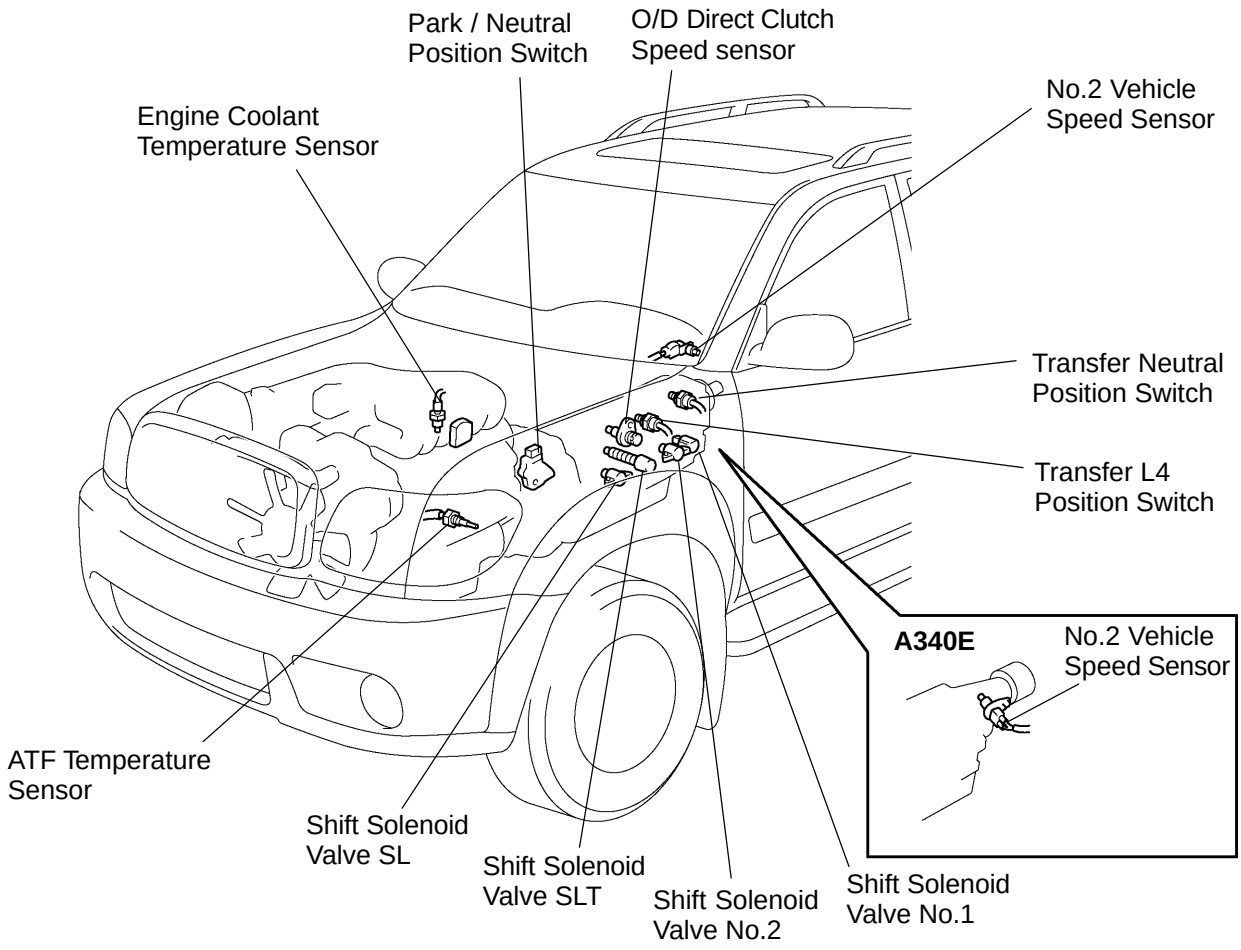

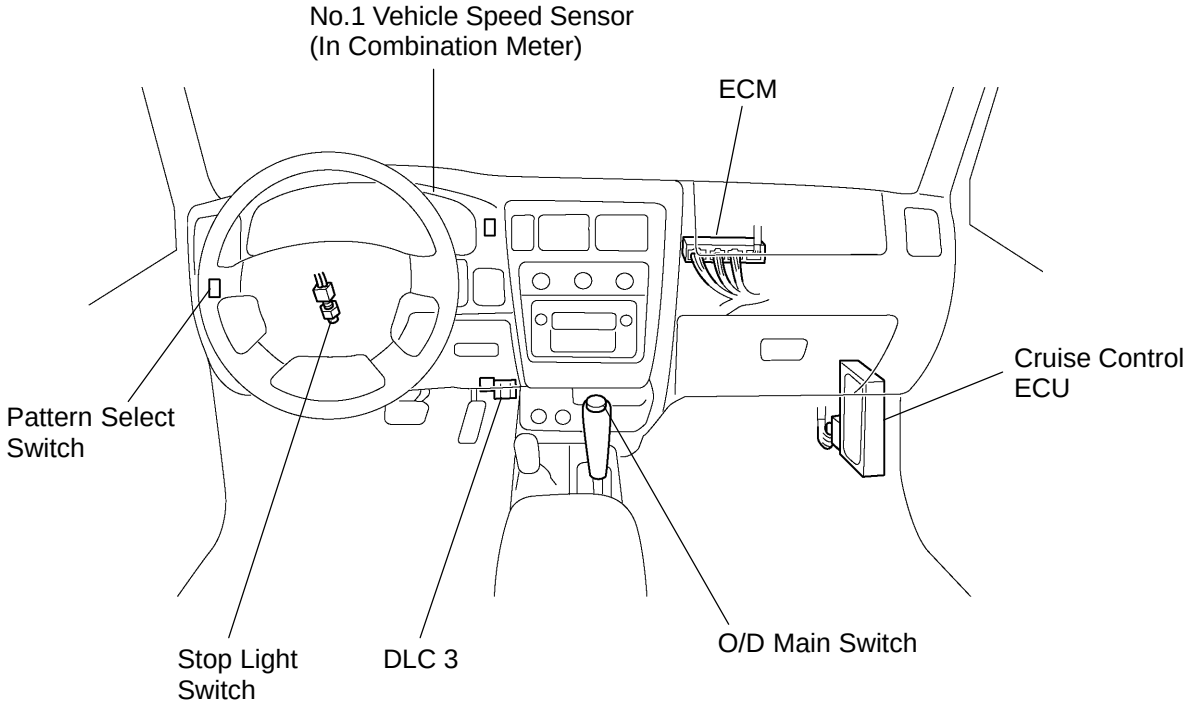

Y

D13066

DI8Z4–03

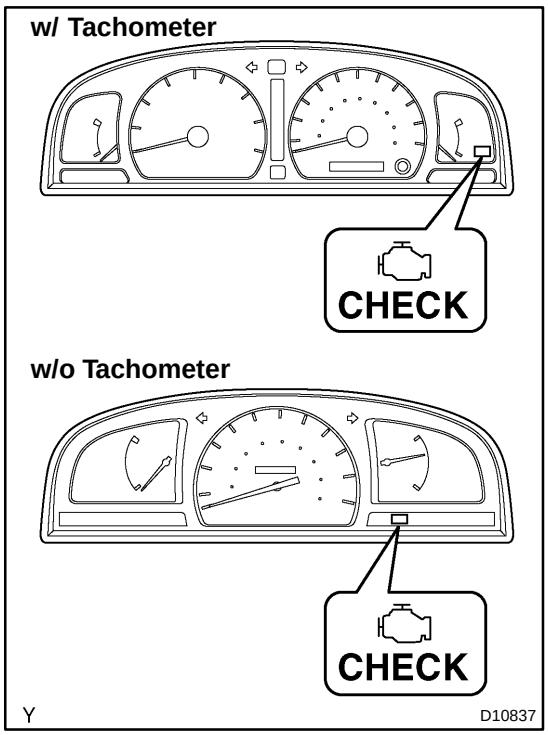

PRE–CHECK

1. DIAGNOSIS SYSTEM

(a) Description

- When troubleshooting OBD II vehicles, the only difference from the usual troubleshooting procedure is that you connect an OBD II scan tool complying with SAE J1987 or hand–held tester to the vehicle, and read off various data output from the vehicle's ECM.

  OBD II regulations require that the vehicle's on–board computer lights up the Malfunction Indicator Lamp (MIL) on the instrument panel when the computer detects a malfunction in the computer itself or in drive system components which affect vehicle emissions. In addition to the MIL lighting up when a malfunction is detected, the applicable DTCs prescribed by SAE J2012 are recorded in the ECM memory.

  (3RZ–FE: See page DI–16)

  (5VZ–FE: See page DI–231)

  If the malfunction not occurs in 3 trips, the MIL goes off but the DTCs remain recorded in the ECM memory.

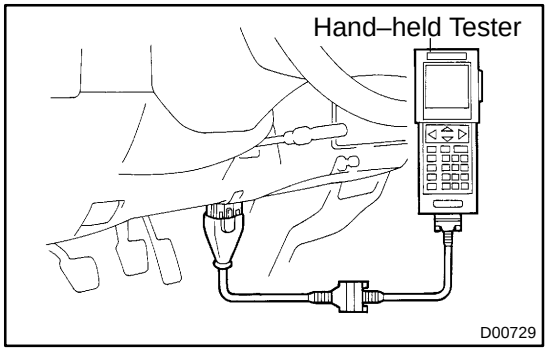

- To check the DTCs, connect an OBD II scan tool or hand–held tester to DLC3 on the vehicle. The OBD II scan tool or hand–held tester also enables you to erase the DTCs and check freeze frame data and various forms of engine data (For instruction book). DTCs include SAE controlled codes and Manufacturer controlled codes.

  SAE controlled codes must be set as the codes prescribed by the SAE, while Manufacturer controlled codes can be set freely by the manufacturer within the prescribed limits (See DTC chart on page DI–469).

- The diagnosis system operates in normal mode during normal vehicle use, and also has a check mode for technicians to simulate malfunction symptoms and perform troubleshooting. Most DTCs use 2 trip detection logic(*) to prevent erroneous detection. By switching the ECM to check mode when troubleshooting, the technician can cause the MIL to light up and for a malfunction that is only detected once or momentarily.
  (hand–held tester) (See page DI–456)
- *2 trip detection logic:
  When a logic malfunction is first detected, the malfunction is temporarily stored in the ECM memory. If the same malfunction is detected again during the 2nd test drive, this 2nd detection causes the MIL to light up .

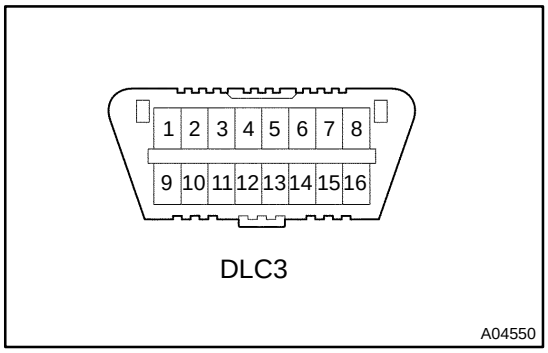

(b) Inspect the DLC3.

- 3RZ–FE:
  The vehicle's ECM uses the ISO 9141–2 communication protocol. The terminal arrangement of DLC3 complies with SAE J1962 and matches the ISO 9141–2 format.
- 5VZ–FE:
  The vehicle's ECM uses the V.P.W. (Variable Pulse Width) for communication to comply with SAE J1850. The terminal arrangement of DLC3 complies with SAE J1962 and matches the V.P.W. format.

Tester connection	Condition	Specified condition
3RZ–FE: 7 (Bus ⊕ Line) ↔ 5 (Signal Ground) 5VZ–FE: 2 (Bus ⊕ Line) ↔ 5 (Signal Ground)	During communication	Pulse generation
4 (Chassis Ground) ↔ Body ground	Always	1 Ω or less
5 (Signal Ground) ↔ Body ground	Always	1 Ω or less
16 (B+) ↔ Body ground	Always	1 Ω or less
		9 – 14 V

HINT:
If your display shows ”UNABLE TO CONNECT TO VEHICLE” when you have connected the cable of OBD II scan tool or hand–held tester to DLC3, turned the ignition switch ON and operated the scan tool, there is a problem on the vehicle side or tool side.

- If communication is normal when the tool is connected to another vehicle, inspect DLC3 on the original vehicle.
- If communication is still not possible when the tool is connected to another vehicle, the problem is probably in the tool itself, so consult the Service Department listed in the tool’s instruction manual.

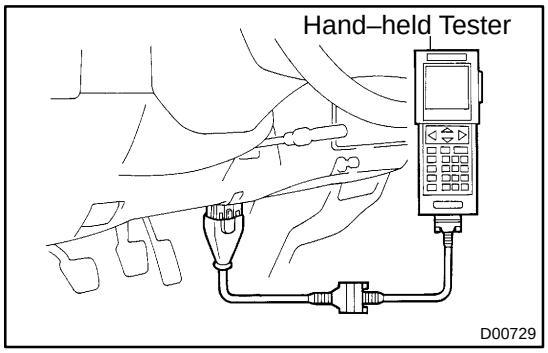

2. INSPECT DIAGNOSIS (NORMAL MODE)

(a) Check the MIL.

(1) The MIL comes on when the ignition switch is turned ON and the engine is not running.

HINT:
If the MIL does not light up, troubleshoot the combination meter (See page BE–39).

(2) When the engine is started, the MIL should go off. If the lamp remains on, the diagnosis system has detected a malfunction or abnormality in the system.

(b) Check the DTC.

NOTICE:

Hand–held tester only: When the diagnostic system is switched from normal mode to check mode, it erases all DTCs and freeze frame data recorded in normal mode. So before switching modes, always check the DTCs and freeze frame data, and note them down.

(1) Prepare an OBD II scan tool (complying with SAE J1978) or hand–held tester.

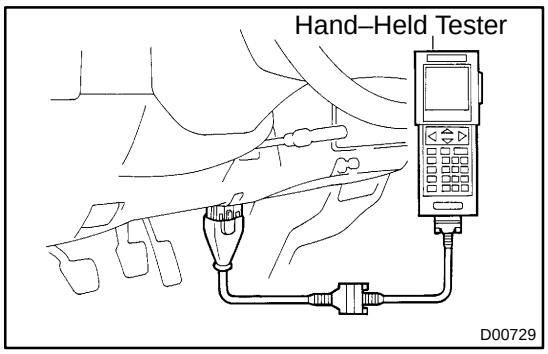

(2) Connect the OBD II scan tool or hand–held tester to DLC3 at the lower of the instrument panel.
(3) Turn the ignition switch ON and turn the OBD II scan tool or hand–held tester switch ON.
(4) Use the OBD II scan tool or hand–held tester to check the DTCs and freeze frame data and note them down (For operating instructions, see the OBD II scan tool's instruction book).
(5) See page DI–469 to confirm the details of the DTCs.

NOTICE:

When simulating symptoms with an OBD II scan tool (excluding hand–held tester) to check the DTCs, use normal mode. For codes on the DTCs chart subject to "2 trip detection logic", turn the ignition switch off after the symptoms have been simulated the 1st time. Then repeat the simulation process again. When the program has DTCs, the DTCs are recorded in the ECM.

3. INSPECT DIAGNOSIS (CHECK MODE)

HINT:

Hand–held tester only: Compared to the normal mode, the check mode has high sensing ability to detect malfunctions. Furthermore, the same diagnostic items which are detected in Normal mode can also be detected in Check mode.

(a) Check the DTC.
(1) Check the initial conditions.
- Battery positive voltage 11 V or more.
- Throttle valve fully closed.
- Transmission in P position.
- Air conditioning switched off.

(2) Turn the ignition switch OFF.
(3) Prepare a hand–held tester.
(4) Connect the hand–held tester to DLC3 at the lower side of the instrument panel.
(5) Turn the ignition switch ON and switch the hand–held tester ON.

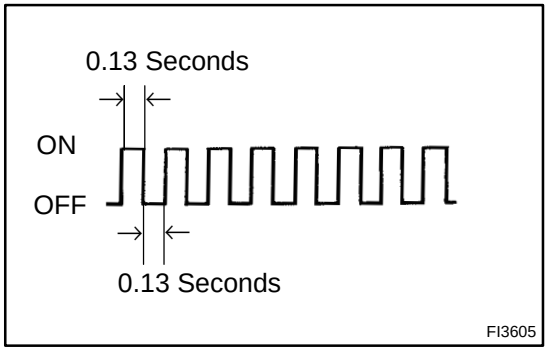

(6) Switch the hand–held tester from Normal mode to Check mode (Check that the MIL flashes).
(7) Start the engine (MIL goes out after the engine starts).
(8) Simulate the conditions of the malfunction described by the customer.

NOTICE:

Leave the ignition switch ON until you have checked the DTCs, etc.

(9) After simulating the malfunction conditions, use the hand–held tester diagnosis selector to check the DTCs and freeze frame data, etc..

HINT:
Take care not to turn the ignition switch OFF, as turning it off the diagnosis system switches from Check mode to Normal mode, so all DTCs, etc. are erased.

(10) After checking the DTC, inspect the applicable circuit.

(b) Clear the DTC.
The following actions will erase the DTC and freeze frame data. Operating an OBD II scan tool (complying with SAE J1978) or hand–held tester to erase the codes (See the OBD II scan tool's instruction book for operating instructions.).

4. ROAD TEST

NOTICE:

Perform the test at normal operating ATF temperature 50 – 80 ˚C (122 – 176 ˚F).

(a) D position test (NORM and PWR pattern):
Shift into the D position and fully depress the accelerator pedal and check the following points.

(1) Check up–shift operation.
1 → 2, 2 → 3 and 3 → O/D up–shift takes place, at the shift point shown in the automatic shift schedule (See page SS–52).

HINT:

- O/D Gear Up–shift Prohibition Control (1. Coolant temp. is 60 ˚C (140 ˚F) or less. 2. If there is a 10 km/h (6 mph) difference between the set cruise control speed and vehicle speed.)
- O/D Gear Lock–up Prohibition Control (1. Brake pedal is depressed. 2. Coolant temp. is 60 ˚C (140 ˚F) or less.)

(2) Check for shift shock and slip.
Check for shock and slip at the 1 → 2, 2 → 3 and 3 → O/D up–shifts.

(3) Check for abnormal noises and vibration.
Run at the D position lock–up or O/D gear and check for abnormal noises and vibration.

HINT:
The check for the cause of abnormal noises and vibration must be done very thoroughly as it could also be due to loss of balance in the differential or torque converter clutch, etc.

(4) Check kick–down operation.
While running in the D position, 2nd, 3rd and O/D gears, check to see that the possible kick–down vehicle speed limits for 2 → 1, 3 → 2 and O/D → 3 kick–downs conform to those indicated on the automatic shift schedule (See page SS–52).

(5) Check abnormal shock and slip at kick–down.

(6) Check the lock–up mechanism.

- Drive in D position, O/D gear, at a steady speed (lock–up ON) of about 80 km/h (50 mph).
- Lightly depress the accelerator pedal and check that the engine speed does not change abruptly.

If there is a big jump in engine speed, there is no lock–up.

(b) 2 position test:

Shift into the 2 position and fully depress the accelerator pedal and check the following points.

(1) Check up–shift operation.

Check to see that the 1 → 2 up–shift takes place and that the shift point conforms to the automatic shift schedule (See page SS–52).

HINT:

There is no O/D up–shift and lock–up in the 2 position.

(2) Check engine braking.

While running in the 2 position and 2nd gear, release the accelerator pedal and check the engine braking effect.

(3) Check for abnormal noises during acceleration and deceleration, and for shock at up–shift and down–shift.

(c) L position test:

Shift into the 2 position and fully depress the accelerator pedal and check the following points.

(1) Check no up–shift.

While running in the L position, check that there is no up–shift to 2nd gear.

(2) Check engine braking.

While running in the L position, release the accelerator pedal and check the engine braking effect.

(3) Check for abnormal noises during acceleration and deceleration.

(d) R position test:

Shift into the R position and fully depress the accelerator pedal and check for slipping.

CAUTION:

Before conducting this test, ensure that the test area is free from people and obstruction.

(e) P position test:

Stop the vehicle on a grade (more than 5°) and after shifting into the P position, release the parking brake. Then, check to see that the parking lock pawl holds the vehicle in place.

5. BASIC INSPECTION

(a) Check the fluid level.

HINT:

- Drive the vehicle so that the engine and transmission are at normal operating temperature.
  Fluid temp.: 70 – 80 ˚C (158 – 176 ˚F)
- Only use the COOL range on the dipstick as a rough reference when the fluid is replaced or the engine does not run.

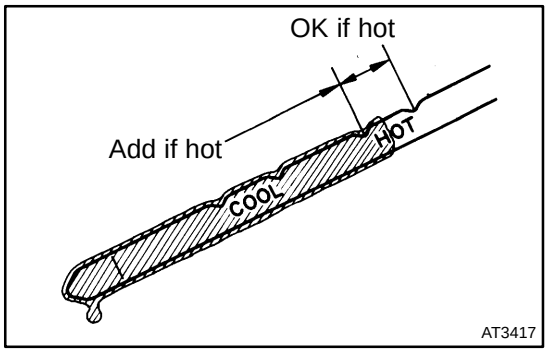

(1) Park the vehicle on a level surface and set the parking brake.
(2) With the engine idling and the brake pedal depressed, shift the shift lever into all positions from P to L position and return to P position.
(3) Pull out the dipstick and wipe it clean.
(4) Push it back fully into the pipe.
(5) Pull it out and check that the fluid level is in the HOT range.

If the level is not within the range, add new fluid.

Fluid type: ATF TYPE T–IV

NOTICE:

Do not overfill.

(b) Check the fluid condition.

If the fluid smells burnt or is black, replace it.

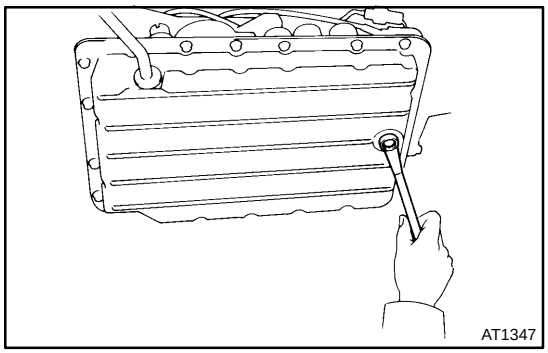

(c) Replace the ATF.
(1) Remove the drain plug and drain the fluid.
(2) Reinstall the drain plug securely.

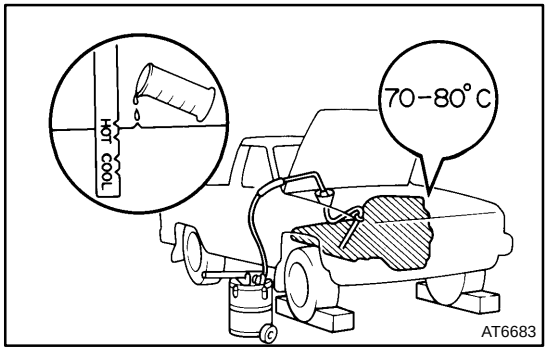

(3) With the engine OFF add new fluid through the oil filler pipe.

Fluid type: ATF TYPE T–IV

Capacity:

A340E and A340F: 2.0 liters (2.1 US qts, 1.8 Imp. qts)

(4) Start the engine and shift the shift lever into all positions from P to L position and then shift into P position.

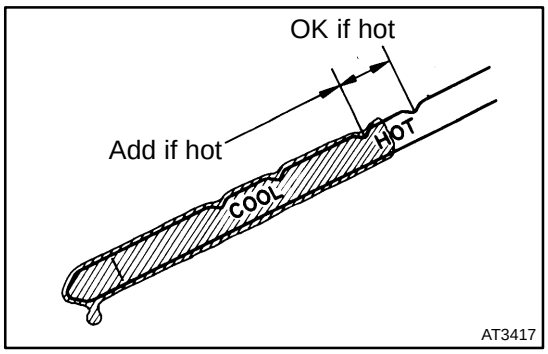

(5) With the engine idling, check the fluid level. Add fluid up to the COOL level on the dipstick.

(6) Check the fluid level at the normal operating temperature, 70 – 80 °C (158 – 176 °F), and add as necessary.

NOTICE:

Do not overfill.

(d) Check the fluid leaks.

Check for leaks in the transmission.

If there are leaks, it is necessary to repair or replace O–rings, FIPGs, oil seals, plugs or other parts.

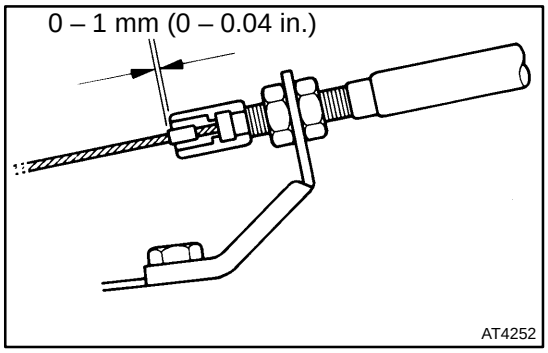

(e) 3RZ–FE:

Inspect and adjust the throttle cable.

(1) Check that the throttle valve is fully closed.

(2) Check that the inner cable is not slack.

(3) Measure the distance between the outer cable end and stopper on the cable.

Standard distance: 0 – 1 mm (0 – 0.04 in.)

If the distance is not standard, adjust the cable by the adjusting nuts.

(f) Inspect and adjust the shift lever position.

When shifting the shift lever from the N position to other positions, check that the lever can be shifted smoothly and accurately to each position and that the position indicator correctly indicates the position.

If the indicator is not aligned with the correct position, carry out the following adjustment procedures.

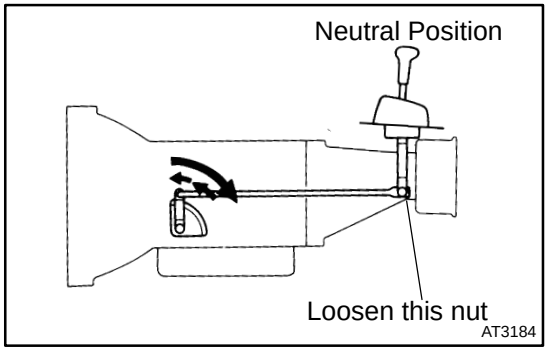

(1) Remove the nut on the shift lever.

(2) Push the control shaft lever fully downward.

(3) Return the control shaft lever 2 notches to N position.

(4) Set the shift lever to N position.

(5) While holding the shift lever lightly toward the R position side, adjust the control shaft lever nut.

(6) Tighten the control shaft lever nut.

Torque: 13 N·m (130 kgf·cm, 10 ft·lbf)

(7) Start the engine and make sure that the vehicle moves forward when shifting the lever from the N to D position and reverses when shifting it to the R position.

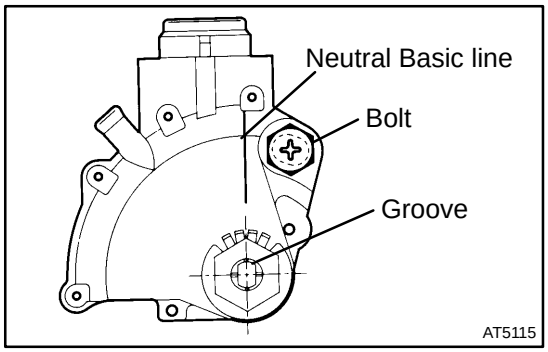

(g) Inspect and adjust the park/neutral position.
Check that the engine can be started with the shift lever only in the N or P position, but not in other positions.

If it is not as stated above, carry out the following adjustment procedure.

(1) Loosen the park/neutral position switch bolt and set the shift lever to the N position.
(2) Align the groove and neutral basic line.
(3) Hold the switch in position and tighten the bolt.

Torque: 13 N·m (130 kgf·cm, 10 ft·lbf)

For continuity inspection of the park/neutral position switch, see page DI–482.

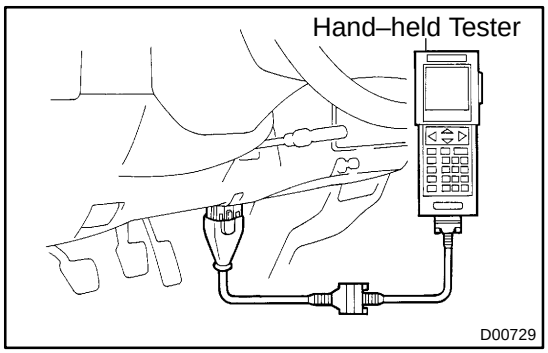

(h) Check the idle speed.
Connect OBD II scan tool or hand–held tester to the DLC3 and inspect the idle speed.

Idle speed (In N position and air conditioner OFF):
3RZ–FE: 700 ± 50 rpm
5VZ–FE: 700 ± 50 rpm

6. MECHANICAL SYSTEM TESTS

(a) Measure the stall speed.

The object of this test is to check the overall performance of the transmission and engine by measuring the stall speeds in the D and R positions.

NOTICE:

- **Do the test at normal operating fluid temperature 50 – 80 ˚C (122 – 176 ˚F).**
- **Do not continuously run this test longer than 5 seconds.**
- **To ensure safety, conduct this test in a wide, clear level area which provides good traction.**
- **The stall test should always be carried out in pairs. One technician should observe the conditions of wheels or wheel stoppers outside the vehicle while the other is doing the test.**

(1) Chock the 4 wheels.

(2) Connect an OBD II scan tool or hand–held tester to DLC3.

(3) Fully apply the parking brake.

(4) Keep your left foot depressing firmly on the brake pedal.

(5) Start the engine.

(6) Shift into the D position. Press all the way down on the accelerator pedal with your right foot. Quickly read the stall speed at this time.

Stall speed:

3RZ–FE: 2,450 ± 150 rpm

5VZ–FE: 2,250 ± 150 rpm

(7) Do the same test in R position.

Stall speed:

3RZ–FE: 2,450 ± 150 rpm

5VZ–FE: 2,250 ± 150 rpm

Evaluation:

Problem	Possible cause
(a) Stall speed low in D and R positions	• Engine output may be insufficient • Stator one–way clutch is operating properly HINT: If more than 600 rpm below the specified value, the torque converter clutch could be faulty.
(b) Stall speed high in D position	• Line pressure too low • Forward clutch slipping • No.2 one–way clutch not operating properly • O/D one–way clutch not operating properly
(c) Stall speed high in R position	• Line pressure too low • Direct clutch slipping • 1st & reverse brake slipping • O/D one–way clutch not operating properly
(d) Stall speed high in D and R positions	• Line pressure too low • Improper fluid level • O/D one–way clutch not operating properly

(b) Measure the time lag.

When the shift lever is shifted while the engine is idling, there will be a certain time lapse or lag before the shock can be felt. This is used for checking the condition of the O/D direct clutch, forward clutch, and 1st & reverse brake.

NOTICE:

- **Do the test at normal operating ATF temperature 50 – 80 °C (122 – 176 °F).**
- **Be sure to allow 1 minute interval between tests.**
- **Perform measurement 3 times and take the average value.**

(1) Fully apply the parking brake.

(2) Start the engine and check idle speed.

Idle speed (In N position and air conditioner OFF):

3RZ–FE: 700 ± 50 rpm

5VZ–FE: 700 ± 50 rpm

(3) Shift the shift lever from N to D position. Using a stop watch, measure the time it takes from when the lever is shifted until the shock is felt.

Time lag: N → D Less than 1.2 seconds

(4) In the same manner, measure the time lag for N → R.

Time lag: N → R Less than 1.5 seconds

Evaluation (If N → D time or N → R time lag is longer than the specified):

Problem	Possible cause
N → D time lag is longer	• Line pressure too low • Forward clutch worn • O/D one–way clutch not operating properly
N → R time lag is longer	• Line pressure too low • Direct clutch worn • 1st & reverse brake worn • O/D one–way clutch not operating properly

7. HYDRAULIC TEST

Measure the line pressure.

NOTICE:

- **Do the test at normal operation ATF temperature 50 – 80 °C (122 – 176 °F).**
- **The line pressure test should always be carried out in pairs. One technician should observe the conditions of wheels or wheel stoppers outside the vehicle while the other is doing the test.**
- **Be careful to prevent SST's hose from interfering with the exhaust pipe.**

(1) Warm up the ATF.

(2) Remove the test plug on the transmission case front left side and connect SST (See page AT–22 and AT–28 for the location to connect SST).

SST 09992–00095 (09992–00151, 09992–00271)

(3) Fully apply the parking brake and chock the 4 wheels.

(4) Start the engine and check idling speed.

(5) Keep your left foot pressing firmly on the brake pedal and shift into D position.

(6) Measure the line pressure when the engine is idling.

(7) Depress the accelerator pedal all the way down. Quickly read the highest line pressure when engine speed reaches stall speed.

NOTICE:

Release the accelerator pedal and stop test if the rear wheels begin to rotate before the engine speed reaches the specified stall speed.

(8) In the same manner, do the test in R position.

Specified line pressure (3RZ–FE):

Condition	D position kPa (kgf/cm^2, psi)	R position kPa (kgf/cm^2, psi)
Idling	376 – 436 (3.8 – 4.4, 55 – 62)	534 – 634 (5.4 – 6.5, 77 – 92)
Stall	977 – 1,177 (10.0 – 12.0, 142 – 171)	1,235 – 1,575 (12.6 – 16.1, 179 – 228)

Specified line pressure (5VZ–FE):

Condition	D position kPa (kgf/cm^2, psi)	R position kPa (kgf/cm^2, psi)
Idling	385 – 445 (3.9 – 4.5, 56 – 65)	596 – 696 (6.1 – 7.1, 86 – 101)
Stall	1,089 – 1,226 (11.1 – 12.5, 158 – 178)	1,461 – 1,795 (14.9 – 18.3, 212 – 260)

If the measured pressures are not up to the specified values, recheck the throttle cable adjustment and re-test.

Evaluation

Problem	Possible cause
If the measured values at all positions are higher	• Throttle cable out of adjustment • Throttle valve defective • Regulator valve defective
If the measured values at all positions are lower	• Throttle cable out of adjustment • Throttle valve defective • Regulator valve defective • Oil pump defective • O/D direct clutch defective
If pressure is low in the D position only	• D position circuit fluid leakage • Forward clutch defective
If pressure is low in the R position only	• R position circuit fluid leakage • Direct clutch defective • 1st & reverse brake defective

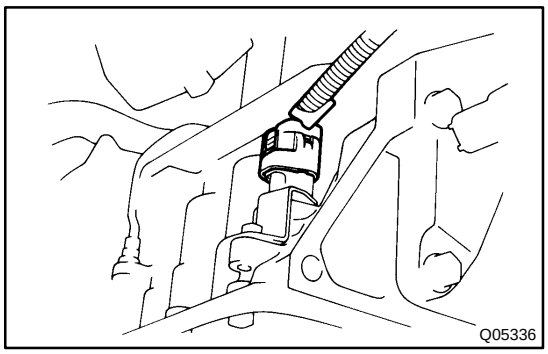

8. MANUAL SHIFTING TEST

HINT:

By this test, it can be determined whether the trouble is within the electrical circuit or is a mechanical problem in the transmission.

(a) Disconnect the solenoid wire.

(b) Inspect the manual driving operation.
Check that the shift and gear positions correspond with the table below.

Shift Position	Gear Position
D	O/D
2	3rd
L	1st
R	Reverse
P	Pawl Lock

HINT:

If the L, 2 and D position gear positions are difficult to distinguish, do the following road test.

- While driving, shift through the L, 2 and D positions. Check that the gear change corresponds to the shift position.
- If any abnormality is found in the above test, the problem is in the transmission itself.

(c) Connect the solenoid wire.

(d) Delete the DTC (See page DI–456).

DI0SR–13

PROBLEM SYMPTOMS TABLE

HINT:

If a normal code is displayed during the DTC check but the trouble still occurs, check the circuits for each symptom in the order given in the charts on the following pages and proceed to the page given for trouble-shooting.

The Matrix Chart is divided into 3 chapters.

When troubleshooting, check Chapter 1 first. If instructions are given in Chapter 1 to proceed to Chapter 2 or 3, proceed as instructed.

- If the instruction ”Proceed to next circuit inspection shown on matrix chart” is given in the flow chart for each circuit, proceed to the circuit with the next highest number in the table to continue the check.
- If the trouble still occurs even though there are no abnormalities in any of the other circuits, then check and replace the ECM.

CHAPTER 1: ELECTRONIC CIRCUIT MATRIX CHART

Symptom	Suspect Area	See page
No up–shift (A particular gear, from 1st to 3rd gear, is not –up shifted)	1. ECM	IN–28
No up–shift (3rd → O/D)	1. O/D main switch & O/D OFF indicator circuit 2. O/D cancel signal circuit 3. ECM	DI–522 DI–519 IN–28
No down–shift (O/D → 3rd)	1. O/D main switch & O/D OFF indicator circuit 2. O/D cancel signal circuit 3. ECM	DI–522 DI–519 IN–28
No down–shift (A particular gear, from 1st to 3rd gear, is not –down shifted)	1. ECM	IN–28
No lock–up	1. ECM	IN–28
No lock–up off	1. ECM	IN–28
Shift point too high or too low	1. Pattern select switch circuit 2. ECM	DI–528 IN–28
Up–shift to O/D from 3rd while O/D main switch is OFF	1. O/D main switch & O/D OFF indicator circuit 2. ECM	DI–522 IN–28
Up–shift to O/D from 3rd while engine is cold	1. ECM	IN–28
No kick–down	1. ECM	IN–28
Engine stalls when starting off or stopping	1. ECM	IN–28
No pattern select	1. Pattern select switch circuit 2. ECM	DI–528 IN–28

CHAPTER 2: ON–VEHICLE REPAIR
(★: A340E, A340F, A340H AUTOMATIC TRANSMISSION Repair Manual Pub. No. RM391U)
(★: A340F, A343F AUTOMATIC TRANSMISSION Repair Manual Pub. No. RM479U)

Symptom	Suspect Area	See page
Vehicle does not move in any forward position and reverse position	1. Throttle cable 2. Transmission control rod 3. Manual valve 4. Primary regulator valve 5. Parking lock pawl 6. Off–vehicle repair matrix chart	DI–456 DI–456 ★ ★ ★ –
Vehicle does not move in R position	1. Off–vehicle repair matrix chart	–
Vehicle does not move in particular position or positions (except R position)	1. Off–vehicle repair matrix chart	–
No up–shift (1st → 2nd)	1. 1–2 shift valve 2. Off–vehicle repair matrix chart	★ –
No up–shift (2nd → 3rd)	1. 2–3 shift valve 2. Off–vehicle repair matrix chart	★ –
No up–shift (3rd → O/D)	1. 3–4 shift valve 2. Off–vehicle repair matrix chart	★ –
No down–shift (O/D → 3rd)	1. 3–4 shift valve 2. Off–vehicle repair matrix chart	★ –
No down–shift (3rd → 2nd)	1. 2–3 shift valve 2. Off–vehicle repair matrix chart	★ –
No down–shift (2nd → 1st)	1. 1–2 shift valve 2. Off–vehicle repair matrix chart	★ –
No lock–up or No lock–up off	1. Lock–up control valve 2. Lock–up relay valve 3. Off–vehicle repair matrix chart	★ ★ –
Harsh engagement (N → D)	1. Accumulator control valve 2. Off–vehicle repair matrix chart	★ –
Harsh engagement (Lock–up)	1. Lock–up control valve 2. Lock–up relay valve 3. Off–vehicle repair matrix chart	★ ★ –
Harsh engagement (N → R)	1. Accumulator control valve 2. C_2 accumulator 3. Off–vehicle repair matrix chart	★ ★ –
Harsh engagement (N → L)	1. Low coast modulator valve	★
Harsh engagement (1st → 2nd / D position)	1. Accumulator control valve 2. B_2 accumulator	★ ★
Harsh engagement (1st → 2nd / 2 position)	1. Accumulator control valve 2. B_2 accumulator	★ ★
Harsh engagement (1st → 2nd → 3rd → O/D)	1. Accumulator control valve 2. Throttle valve	★ ★
Harsh engagement (2nd → 3rd)	1. Accumulator control valve 2. C_2 accumulator 3. Off–vehicle repair matrix chart	★ ★ –

Harsh engagement (3rd → O/D)	1. Accumulator control valve 2. Solenoid modulator valve 3. Off–vehicle repair matrix chart	★ ★ –
Harsh engagement (O/D → 3rd)	1. Accumulator control valve 2. C_0 accumulator 3. Off–vehicle repair matrix chart	★ ★ –
Slip or shudder (Forward and reverse)	1. Throttle cable 2. Transmission control rod 3. Oil strainer 4. Pressure relief valve 5. Off–vehicle repair matrix chart	DI–456 DI–456 ★ ★ –
Slip or shudder (Particular position)	1. Throttle cable 2. Transmission control rod 3. Off–vehicle repair matrix chart	DI–456 DI–456 –
No engine braking (1st / L position)	1. Low coast modulator valve 2. Off–vehicle repair matrix chart	★ –
No engine braking (2nd / 2 position)	1. 2nd coast modulator valve 2. Off–vehicle repair matrix chart	★ –
No kick–down	1. 1–2 shift valve 2. 2–3 shift valve	★ ★

CHAPTER 3: OFF–VEHICLE REPAIR
(★: A340E, A340F, A340H AUTOMATIC TRANSMISSION Repair Manual Pub. No. RM391U)
(★: A340F, A343F AUTOMATIC TRANSMISSION Repair Manual Pub. No. RM479U)

Symptom	Suspect Area	See page
Vehicle does not move in any forward position and reverse position	1. O/D one–way clutch (F_0) 2. O/D direct clutch (C_0) 3. O/D brake (B_0) 4. O/D planetary gear unit 5. Torque converter clutch	★ ★ ★ ★ ★
Vehicle does not move in R position	1. 2nd coast brake (B_1) 2. Front and rear planetary gear unit 3. Direct clutch (C_2) 4. 1st & reverse brake (B_3) 5. O/D direct clutch (C_0)	★ ★ ★ ★ ★
Vehicle does not move in D, 2 and L positions	1. Forward clutch (C_2)	★
Vehicle does not move in D, 2 positions	1. No.2 one–way clutch (F_2)	★
Vehicle does not move in 2 position	1. 1st & reverse (B_3)	★
Vehicle does not move in L position	1. 2nd brake (B_2) 2. 2nd coast brake (B_1) 3. Direct clutch (C_2)	★ ★ ★
No up–shift (1st → 2nd)	1. 2nd brake (B_2) 2. No. 1 one–way clutch (F_1)	★ ★
No up–shift (2nd → 3rd)	1. Direct clutch (C_2)	★
No up–shift (3rd → O/D)	1. O/D brake (B_0)	★
No down–shift (2nd → 1st)	1. 2nd coast brake (B_1) 2. 2nd brake (B_2)	★ ★
No lock–up or No lock–up off	1. Torque converter clutch	★
Harsh engagement (N → D)	1. Forward clutch (C_1)	★
Harsh engagement (N → R)	1. Direct clutch (C_2) 2. 1st and reverse brake (B_3)	★ ★
Harsh engagement (2nd → 3rd)	1. 2nd coast brake (B_1)	★
Harsh engagement (3rd → O/D)	1. O/D direct clutch (C_0) 2. O/D brake (B_0) 3. O/D planetary gear unit	★ ★ ★
Harsh engagement (O/D → 3rd)	1. O/D brake (B_0)	★
Harsh engagement (Lock–up)	1. Torque converter clutch	★
Slip or shudder (Forward and reverse / After warm–up)	1. Torque converter clutch 2. O/D one–way clutch (F_0) 3. O/D direct clutch (C_0)	★ ★ ★
Slip or shudder (Forward and reverse / Just after engine starts)	1. Torque converter clutch	★
Slip or shudder (R position)	1. Direct clutch (C_2) 2. 1st & reverse brake (B_3)	★ ★
Slip or shudder (1st)	1. Forward clutch (C_1) 2. No. 2 one–way clutch (F_2)	★ ★
Slip or shudder (2nd)	1. 2nd brake (B_2) 2. 2nd coast brake (B_1) 3. No. 1 one–way clutch (F_1)	★ ★ ★
Slip or shudder (3rd)	1. Direct clutch (C_2)	★
Slip or shudder (O/D)	1. O/D brake (B_0)	★
No engine braking (1st ~ 3rd: D position)	1. O/D direct clutch (C_0)	★

No engine braking (1st: L position)	1. 1st & reverse brake (B_3)	★
No engine braking (2nd: 2 position)	1. 2nd coast brake (B_1)	★
Poor acceleration (All position)	1. Torque converter clutch	★
Poor acceleration (O/D)	1. O/D direct clutch (C_0) 2. O/D planetary gear unit	★ ★
Poor acceleration (other than O/D)	1. O/D brake (B_0)	★
Poor acceleration (other than 2nd)	1. 2nd coast brake (B_1) 2. 2nd brake (B_2)	★ ★
Poor acceleration (1st and 2nd)	1. Direct clutch (C_2)	★
Poor acceleration (L and R positions)	1. 1st & reverse brake (B_3)	★
Poor acceleration (R position)	1. Forward clutch (C_1)	★
Engine stalls when starting off or stopping	1. Torque converter clutch	★

DI8Z5–03

TERMINALS OF ECM

3RZ–FE:

ECM Terminals

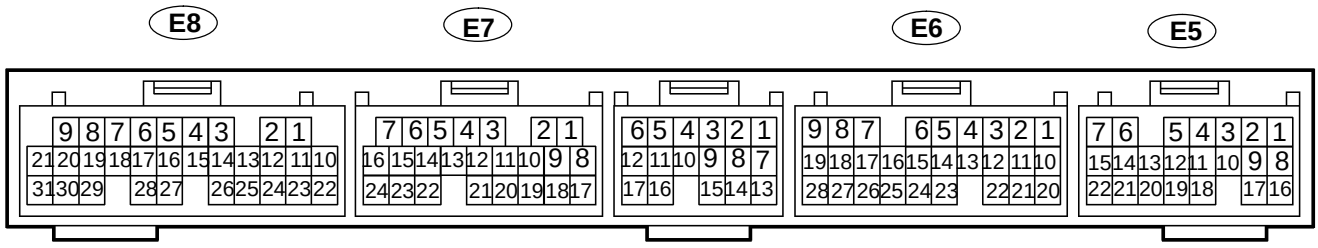

Symbols (Terminals No.)	Wiring Color	Condition	STD Voltage (V)
S1 (E8 – 7) ↔ E1 (E7 – 17)	V ↔ BR	IG ON	9 – 14
		IG ON and 1st or 2nd gear	9 – 14
		IG ON and 3rd or O/D gear	Below 1.5
S2 (E8 – 8) ↔ E1 (E7 – 17)	LG ↔ BR	IG ON	Below 1.5
		IG ON and 2nd or 3rd gear	9 – 14
		IG ON and 1st or O/D gear	Below 1.5
SL (E8 – 9) ↔ E1 (E7 – 17)	R–W ↔ BR	IG ON	Below 1.5
		IG ON and vehicle driving under lock–up position	9 – 14
SP2+ (E6 – 14) ↔ SP2– (E6 – 23)	Y–R ↔ W–R	IG ON and Rotate driving wheel slowly	Pulse signal is output
OD1 (E5 – 11) ↔ E1 (E7 – 17)	R–Y ↔ BR	IG ON	9 – 14
ODLP (E5 – 10) ↔ E1 (E7 – 17)	L–O ↔ BR	IG ON and O/D OFF indicator light lights up	Below 3
		IG ON and O/D OFF indicator light goes off	9 – 14
THO (E8 – 26) ↔ E2 (E7 – 18)	Y–R ↔ L–B	IG ON and ATF temperature: 115˚C (239˚F) or more	Below 1.5
L (E5 – 3) ↔ E1 (E7 – 17)	R ↔ BR	IG ON and Shift lever L position	7.5 – 14
		IG ON and Shift lever other than L position	Below 1.5
2 (E5 – 4) ↔ E1 (E7 – 17)	P ↔ BR	IG ON and Shift lever 2 position	7.5 – 14
		IG ON and Shift lever other than 2 position	Below 1.5
R (E5 – 2) ↔ E1 (E7 – 17)	R–B ↔ BR	IG ON and Shift lever R position	7.5 – 14
		IG ON and Shift lever other than R position	Below 1.5
NSW (E5 – 22) ↔ E1 (E7 – 17)	Y–GR ↔ BR	IG ON and Shift lever P or N position	Below 3
		IG ON and Shift lever other than P or N position	9 – 14
PWR (E5 – 17) ↔ E1 (E7 – 17)	GR–R ↔ BR	IG ON and Pattern select switch ”NORM”	Below 1.5
		IG ON and Pattern select switch ”PWR”	7.5 – 14
ODMS (E6 – 25) ↔ E1 (E7 – 17)	LG ↔ BR	IG ON	9 – 14
		IG ON and Press continuously O/D cancel switch	Below 1.5
TFN (E5 – 9) ↔ E1 (E7 – 17) *1	L ↔ BR	IG ON and Transfer shift position H2 or H4 or L4	9 – 14
		IG ON and Transfer shift position N	Below 1.5
L4 (E5 – 19) ↔ E1 (E7 – 17) *1	GR ↔ BR	IG ON and Transfer shift position L4	Below 1.5
		IG ON and Transfer shift position H2 or H4	9 – 14

*1: 4WD

5VZ–FE:

ECM Terminals

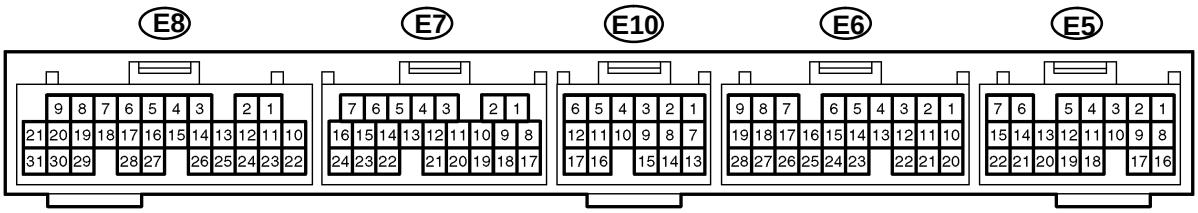

N

D10501

Symbols (Terminals No.)	Wiring Color	Condition	STD Voltage (V)
S1 (E8 – 3) ↔ E1 (E7 – 17)	V ↔ BR	IG ON	9 – 14
		IG ON and 1st or 2nd gear	9 – 14
		IG ON and 3rd or O/D gear	Below 1.5
S2 (E8 – 2) ↔ E1 (E7 – 17)	LG ↔ BR	IG ON	Below 1.5
		IG ON and 2nd or 3rd gear	9 – 14
		IG ON and 1st or O/D gear	Below 1.5
SL (E8 – 1) ↔ E1 (E7 – 17)	R–W ↔ BR	IG ON	Below 1.5
		IG ON and vehicle driving under lock–up condition	9 – 14
SLT+ (E10 – 5) ↔ SLT– (E10 – 11)	W ↔ Y	IG ON	Below 3
		IG ON and engine is idling	Pulse signal output Below 1.5 ↔ 10 – 12
SP1 (E5 – 6) ↔ E1 (E7 – 17)	G–O ↔ BR	IG ON and driving wheel rotating slowly	Pulse generation
$SP2^{+}$ (E7 – 23) ↔ $SP2^{-}$ (E7 – 22)	Y–R ↔ W–R	IG ON and engine is running	Below 1.5
ODLP (E6 – 20) ↔ E1 (E7 – 17)	L–O ↔ BR	IG ON	9 – 14
ODMS (E6 – 14) ↔ E1 (E7 –17)	LG ↔ BR	IG ON and O/D main switch ON	Below 3
		IG ON and O/D main switch OFF	9 – 14
THOC (E8 – 19) ↔ E2 (E8 – 11)	Y–R ↔ L–B	IG ON and ATF temperature: 115˚C (239˚F) or more	Below 1.5
OILW (E6 – 21) ↔ E1 (E7 – 17)	O ↔ BR	IG ON and ATF temperature: 115˚C (239˚F) or more	Below 1.5
L (E6 – 4) ↔ E1 (E7 – 17)	R ↔ BR	IG ON and Shift lever at L position	7.5 – 14
		IG ON and Shift lever at any position except L position	Below 1.5
2 (E6 – 5) ↔ E1 (E7 – 17)	P ↔ BR	IG ON and Shift lever at 2 position	7.5 – 14
		IG ON and Shift lever at any position except 2 position	Below 1.5
D (E6 – 25) ↔ E1 (E7 – 17)	B–W ↔ BR	IG ON and Shift lever at D position	7.5 – 14
		IG ON and Shift lever at any position except D position	Below 1.5
R (E6 – 6) ↔ E1 (E7 – 17)	R–B ↔ BR	IG ON and Shift lever at R position	7.5 – 14
		IG ON and Shift lever at any position except R position	Below 1.5
NSW (E6 – 3) ↔ E1 (E7 – 17)	Y–GR ↔ BR	IG ON and Shift lever at P or N position	Below 3
		IG ON and Shift lever at any position except P and N position	9 – 14
TFN (E6 – 11) ↔ E1 (E7 – 17)*2	L ↔ BR	IG ON and Transfer lever at N position	Below 1.5
		IG ON and Transfer lever at any position except N position	9 – 14

Symbols (Terminals No.)	Wiring Color	Condition	STD Voltage (V)
L4 (E6 – 2) ↔ E1 (E7 – 17) *2	GR ↔ BR	IG ON and Transfer lever at L4 position	Below 1.5
		IG ON and Transfer lever at H2 or H4 position	9 – 14

*1: Alternates repeatedly between below 1.5 V and 4 – 5 V
*2: 4WD only

DI83V–04

Door Lock Control Switch Circuit

CIRCUIT DESCRIPTION

When the door lock control switch is turned to the the lock side, LOCK terminal of the switch is grounded, and when the switch is turned to the unlock side, the UNLOCK terminal is grounded (See the wiring diagram below).

WIRING DIAGRAM

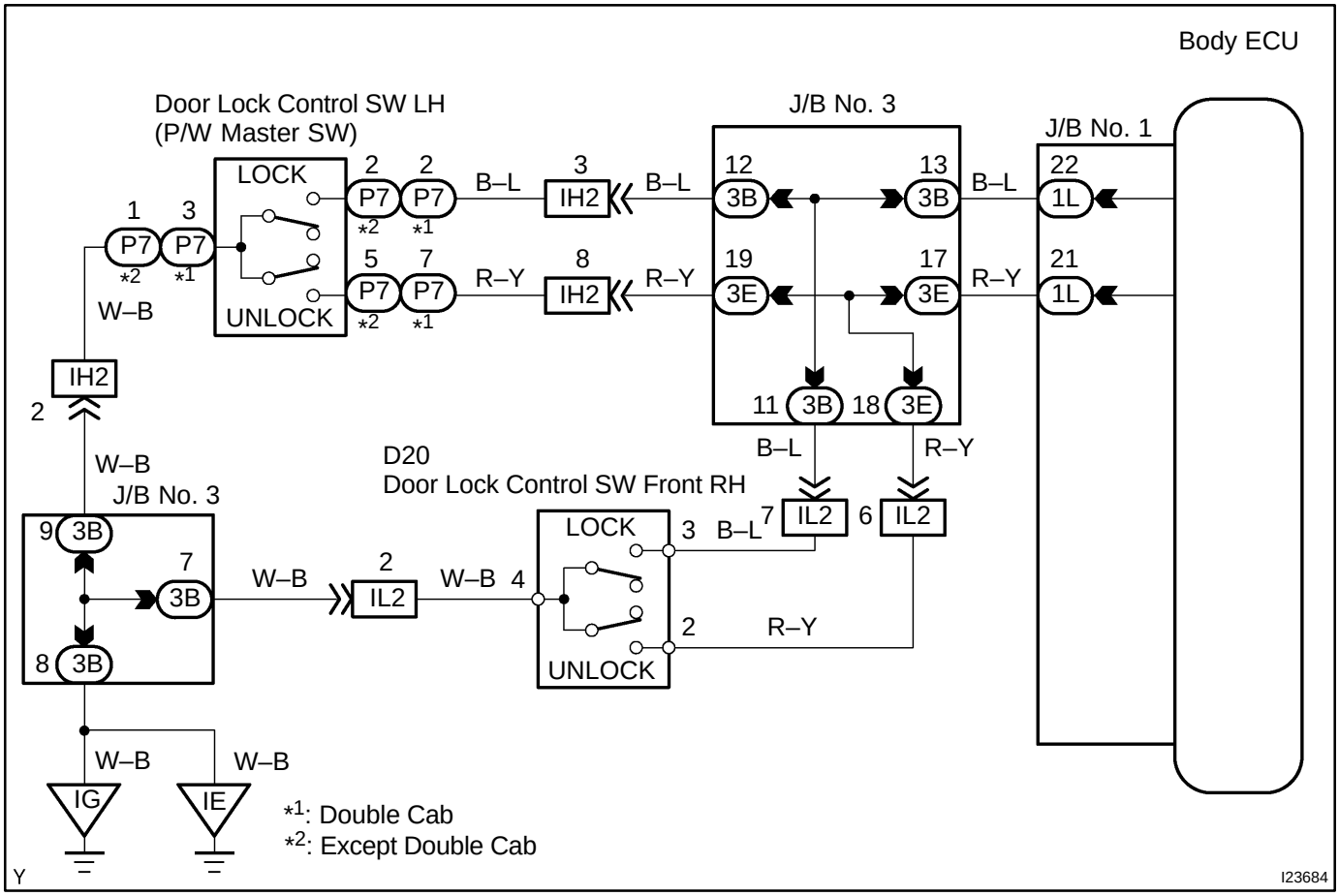

INSPECTION PROCEDURE

1	**Check door lock control switch (See page BE–54).**

NG → **Replace door lock control switch.**

OK

2	Check wireharness and connector between door lock control switch and body ECU (See page IN–28).

NG → Repair or replace harness or connector.

OK

3	Check harness and connector between door lock control switch and power window master switch.

NG → Repair or replace harness or connector.

OK

Proceed to next circuit inspection shown in problem symptoms table (See page DI–773).

DI83W–03

Door Courtesy Switch Circuit

CIRCUIT DESCRIPTION

Door courtesy switch comes on when the door is opened and goes off when the door is closed.

WIRING DIAGRAM

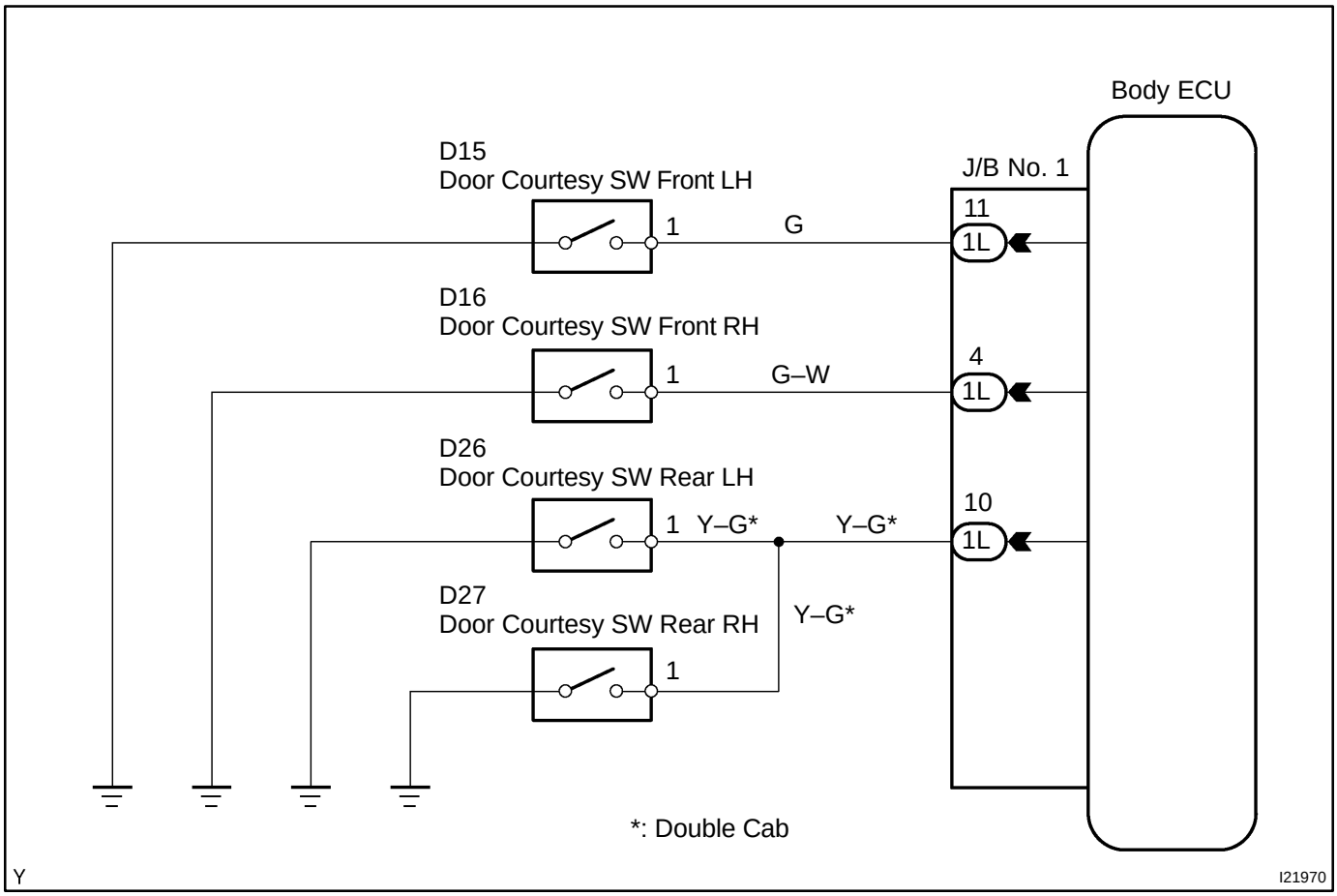

INSPECTION PROCEDURE

1	**Check door courtesy switch (See page BE–54).**

NG → **Replace door courtesy switch.**

OK

2	Check for a grounding malfunction caused by loosened screw.

NG → Tighten screw.

OK

3	Check for harness and connector between door courtesy switch and body ECU (See page IN–28).

NG → Repair or replace harness or connector.

OK

Proceed to next circuit inspection shown in problem symptoms table (See page DI–773).

DI83U–04

Door Key Lock and Unlock Switch Circuit

CIRCUIT DESCRIPTION

Door key lock and unlock switch is built in the door key cylinder. When the key is turned to the lock side, terminals 6 (LH) and 7 (RH) of the switch is grounded and when the key is turned to the unlock side, terminals 1 (LH) and 4 (RH) of the switch is grounded.

WIRING DIAGRAM

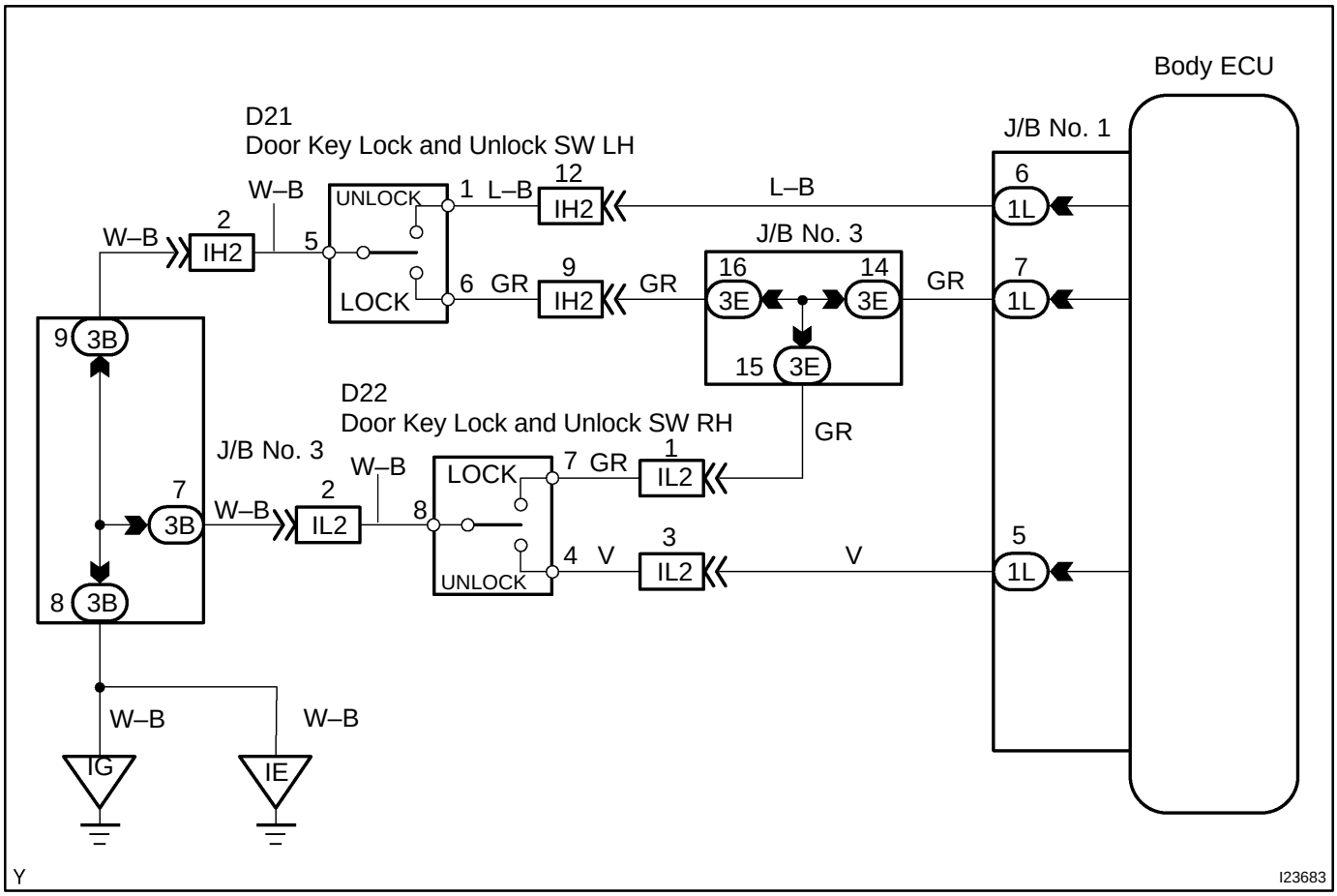

INSPECTION PROCEDURE

1	**Check door key lock and unlock switch (See page BE–54).**

NG → **Replace door key lock and unlock switch.**

OK

2	**Check for harness and connector between door key lock and unlock switch and body ECU (See page IN–28).**

NG → **Repair or replace harness or connector.**

OK

Proceed to next circuit inspection shown in problem symptoms table (See page DI–773).

DI83S–04

Door Lock Motor Circuit

WIRING DIAGRAM

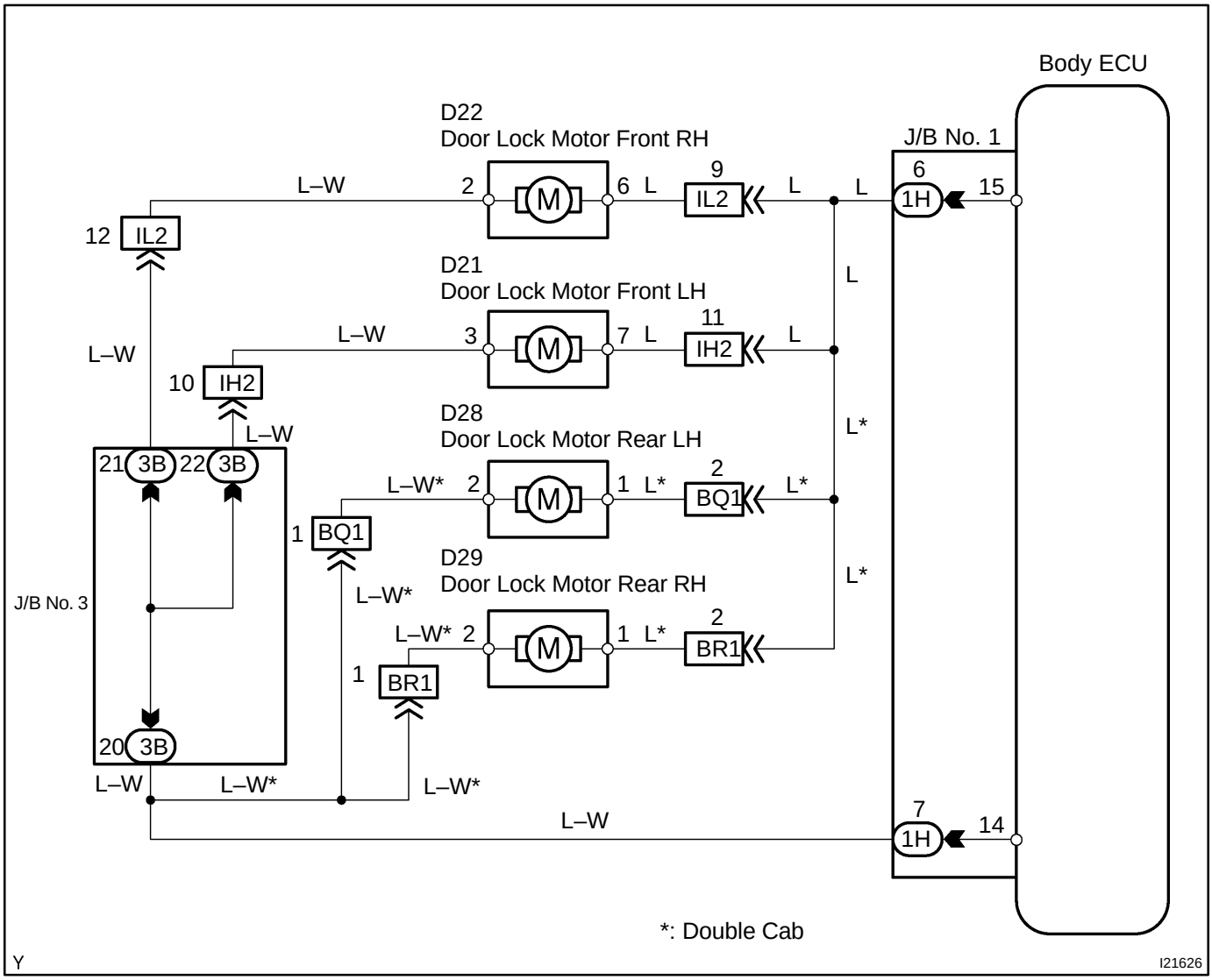

INSPECTION PROCEDURE

1	Check door lock motor (See page BE–54).

NG → Replace door lock motor.

OK

2	Check for harness and connector between door lock motor and body ECU.

NG → Repair or replace harness or connector.

OK

Proceed to next circuit inspection shown in problem symptoms table (See page DI–773).

DI83T–04

Door Unlock Detection Switch Circuit

CIRCUIT DESCRIPTION

Door unlock detection switch is built in the door lock motor assembly. This switch comes on when the door lock knob is in the unlock position and goes off when the lock knob is in the lock position. The body ECU detects the door lock knob conditions in this circuit. It is used as one of the operating conditions for the key confinement prevention function.

WIRING DIAGRAM

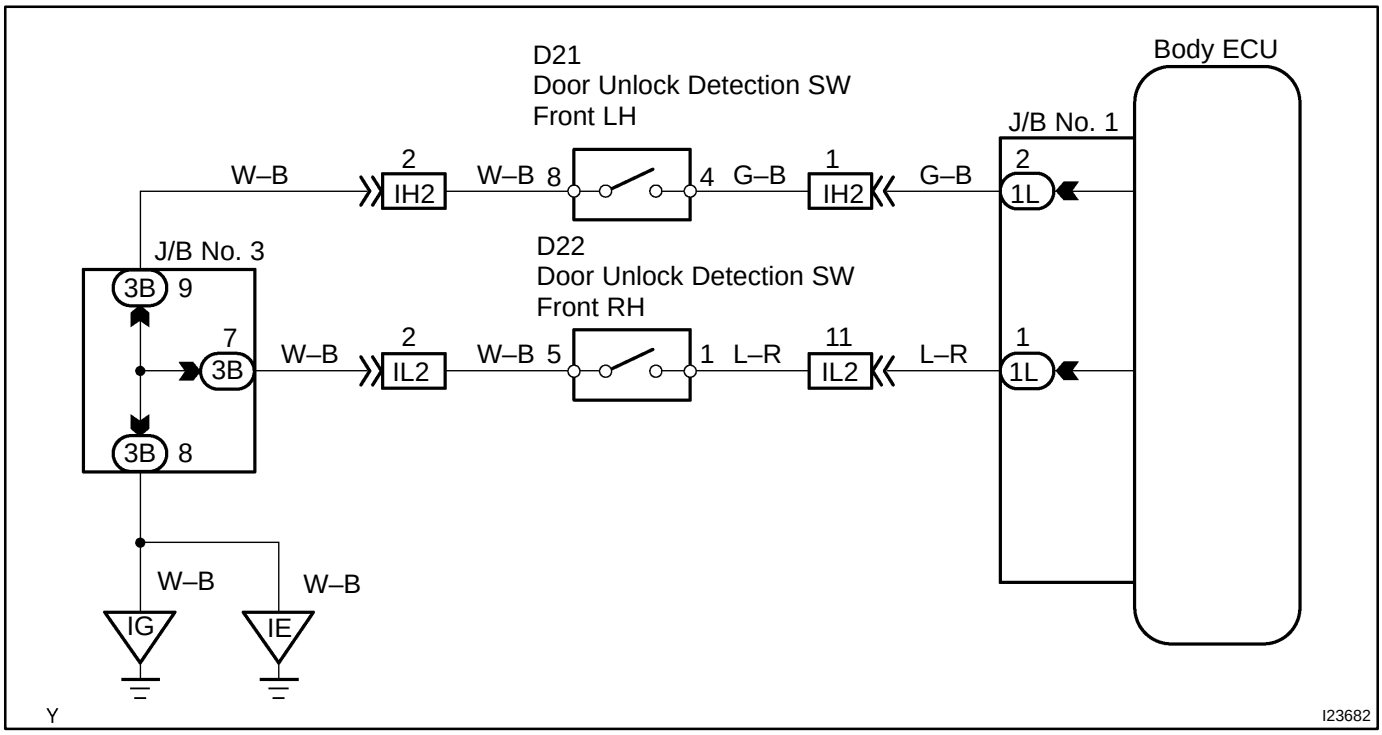

INSPECTION PROCEDURE

1	**Check door unlock detection switch (See page BE–54).**

NG → **Replace door unlock detection switch.**

OK

2	**Check for harness and connector between door unlock detection switch and body ECU (See page IN–28).**

NG → **Repair or replace harness or connector.**

OK

Proceed to next circuit inspection shown in problem symptoms table (See page DI–773).

DI7U0–04

Driver buckle switch circuit

WIRING DIAGRAM

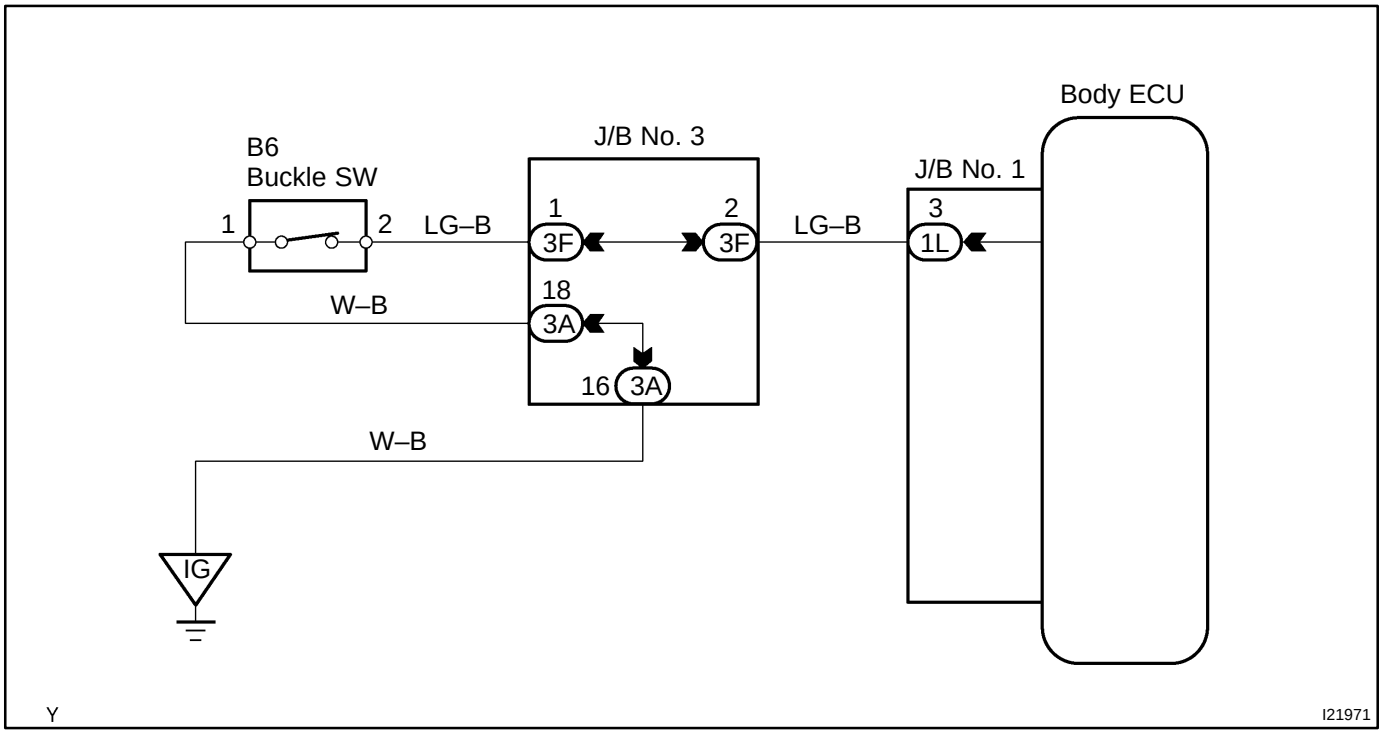

INSPECTION PROCEDURE

HINT:
In case of using a hand–held tester, start the inspection from step 1, and in case of not using a hand–held tester, start it from step 2.

1	**Check driver buckle switch using hand–held tester.**

PREPARATION:
Connect a hand–held tester to the DLC 3.
CHECK:
Check the driver buckle switch, using DATA LIST.

OK → **Proceed to next circuit inspection shown on problem symptoms table. (See page DI–773)**

NG

2	Check driver buckle switch. (See page BE–39)

NG → Replace the driver buckle switch.

OK

3	Check wire harness and connector between driver buckle switch and body ground.

NG → Repair or replace wire harness or connector.

OK

Proceed to next circuit inspection shown on problem symptoms table.
(See page DI–773)

DI83K–04

Headlight Relay Circuit

CIRCUIT DESCRIPTION

Headlight relay will be on by operating the headlight switch. The transistor which activates the taillight relay has two sorts: one is activated directly by the headlight switch for fail safe and another is activated by CPU. The one activated by CPU has two systems and prevents the headlight from turning off at the time of one system trouble in the automatic operation circuit.

WIRING DIAGRAM

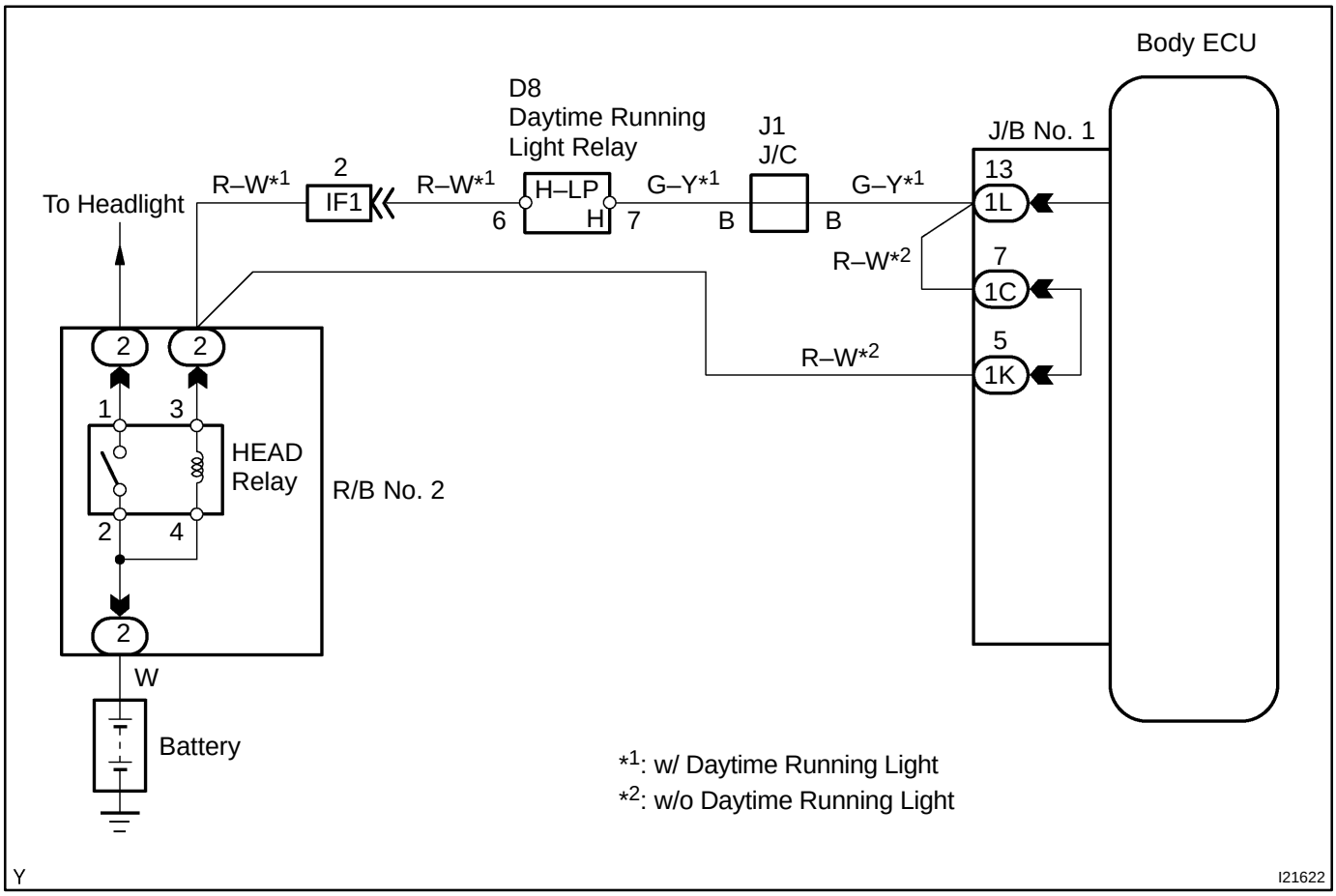

INSPECTION PROCEDURE

1	Check headlight relay (See page BE–17).

NG → Replace headlight relay.

OK

2	Check for harness and connector between headlight relay and body ECU, and battery and headlight relay (See page IN–28).

NG → Repair or replace harness or connector.

OK

Proceed to next circuit inspection shown in problem symptoms table (See page DI–773).

DI7WA–04

Ignition Switch Power Source Circuit

CIRCUIT DESCRIPTION

When the ignition switch is turned to the ON position, battery voltage is applied to terminal IG of the body ECU.

WIRING DIAGRAM

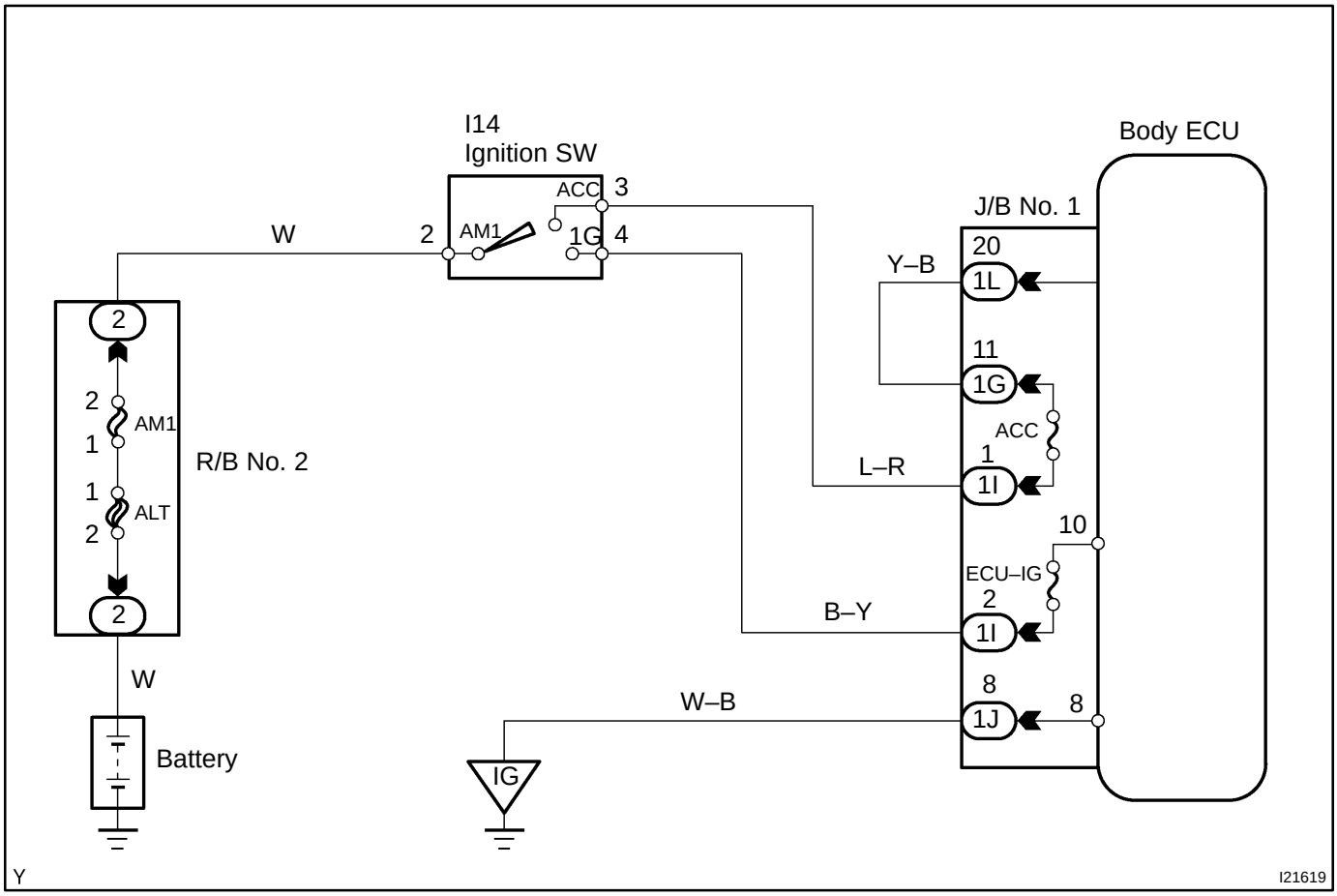

INSPECTION PROCEDURE

1	**Check voltage between terminals 1I–2/1L–20 and 1J–8 of body ECU connector.**

PREPARATION:
Turn the ignition switch ON.
CHECK:
Measure the voltage between terminals 1I–2/1L–20 and 1J–8 of the body ECU connector.
OK:
Voltage: 9 – 14 V

OK → **Proceed to next circuit inspection shown in problem symptoms table (See page DI–773).**

NG

2	**Check ECU–IG and ACC fuses.**

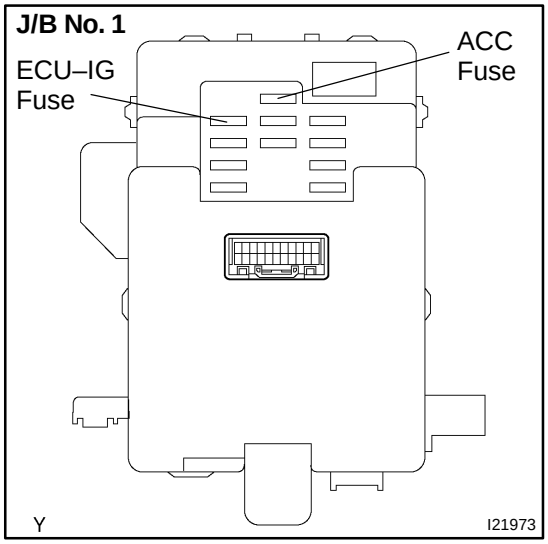

PREPARATION:
Remove the ECU–IG and ACC fuses from the J/B No. 1.
CHECK:
Check the continuity of the ECU–IG and ACC fuses.
OK:
Continuity

NG → **Replace faulty fuse.**

OK

3	Check ignition switch (See page BE–14).

NG → Replace ignition switch.

OK

4	Check for harness and connector between body ECU and body ground (See page IN–28).

NG → Repair or replace harness or connector.

OK

Check and repair harness or connector between body ECU and battery (See page IN–28).

DI83P–03

Illumination Circuit

CIRCUIT DESCRIPTION

Receiving the courtesy signal from the body ECU will make the interior light and courtesy light on.

WIRING DIAGRAM

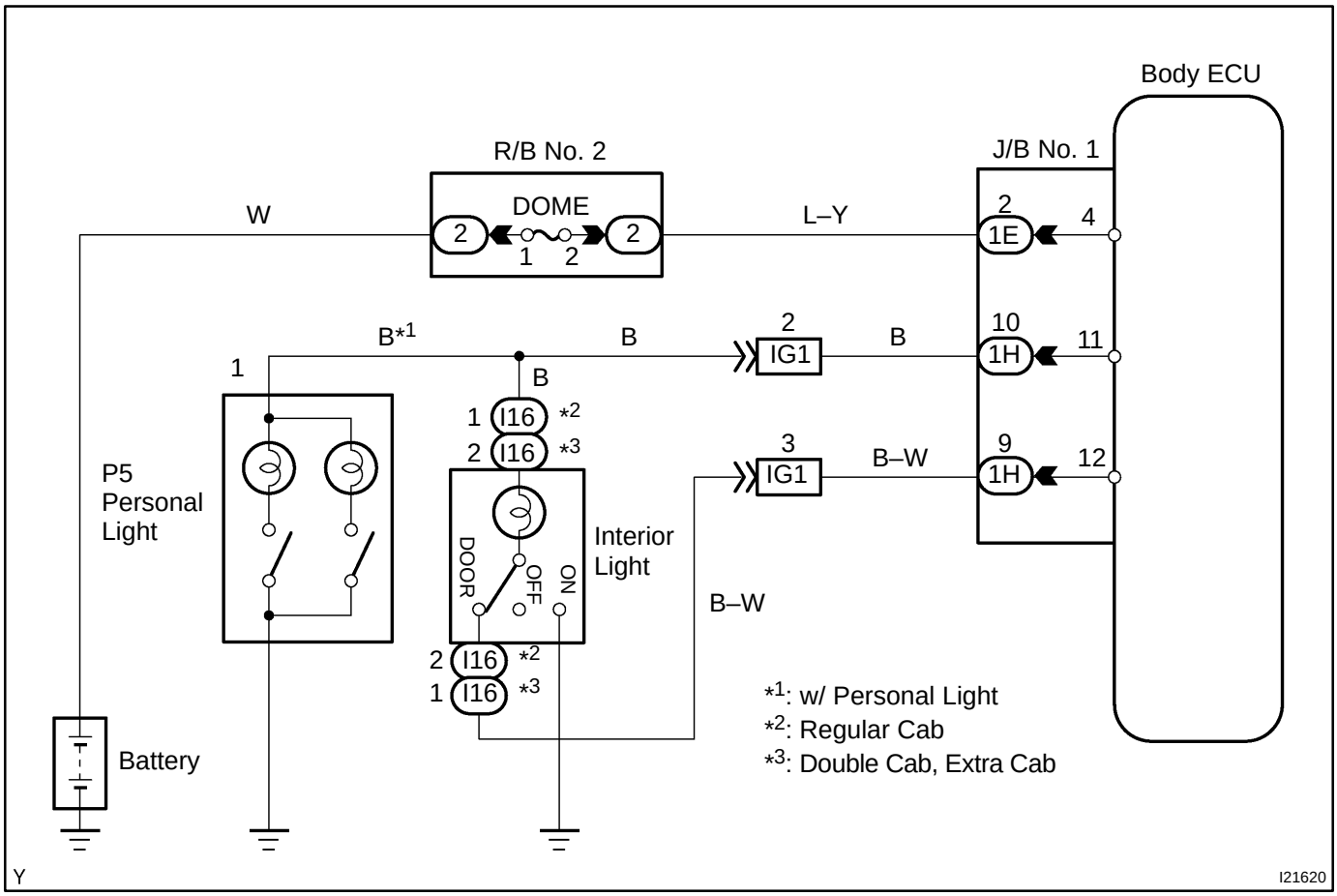

INSPECTION PROCEDURE

1	**Check DOME fuse (See page DI–777).**

NG → **Replace fuse.**

OK

2	**Check illumination light.**

NG → **Replace failure light.**

OK

3	**Check for harness and connector between each illumination light and body ECU, and battery and each illumination light (See page IN–28).**

NG → **Repair or replace harness or connector.**

OK

Proceed to next circuit inspection shown in problem symptoms table (See page DI–773).

DI83Q–04

Key Unlock Warning Switch Circuit

CIRCUIT DESCRIPTION

Key unlock warning switch comes on when the ignition key is inserted in the key cylinder and goes off when the ignition key is removed.
The body ECU operates the key confinement prevention function while the key unlock warning switch is on.

WIRING DIAGRAM

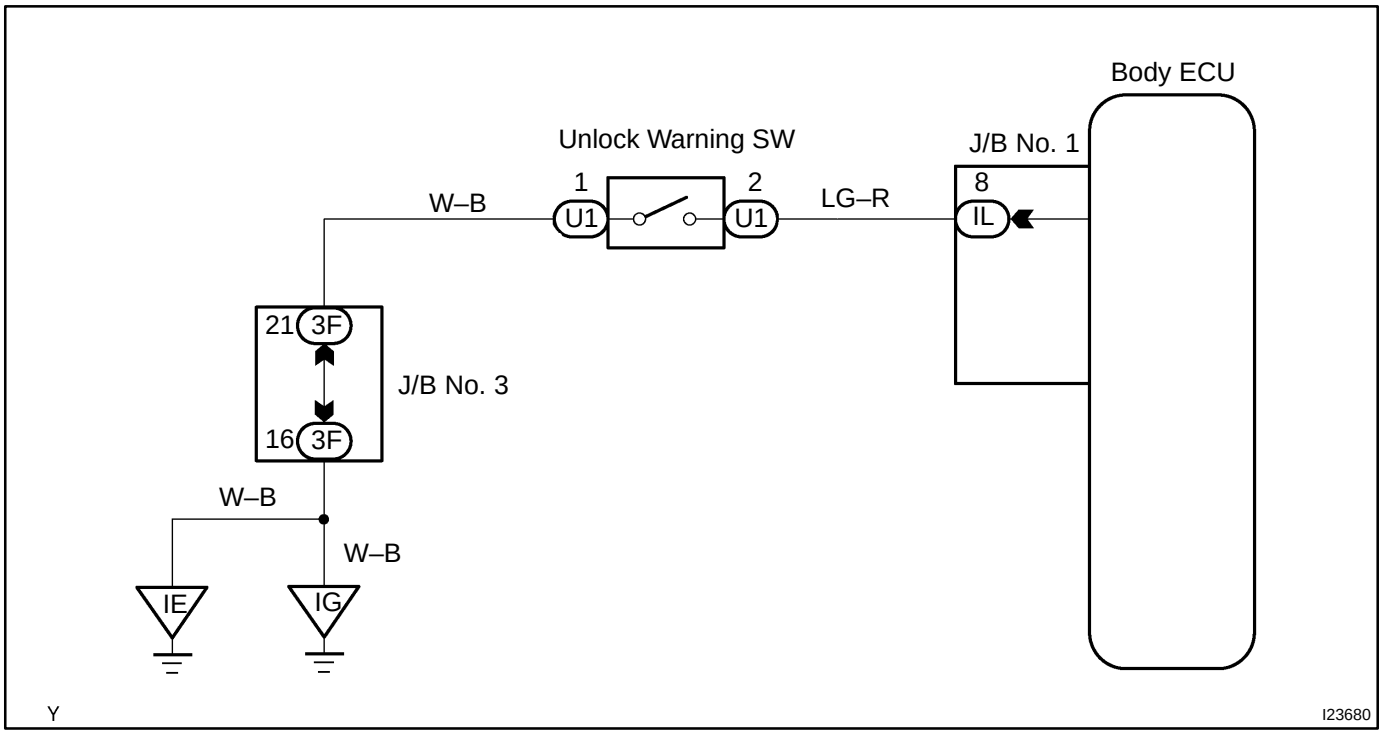

INSPECTION PROCEDURE

1	**Check key unlock warning switch (See page BE–14).**

NG → **Replace key unlock warning switch.**

OK

2	**Check for harness and connector between key unlock warning switch and body ECU (See page IN–28).**

NG → **Repair or replace harness or connector.**

OK

Proceed to next circuit inspection shown in problem symptoms table (See page DI–773).

DI83M–04

Light Control Switch Circuit

CIRCUIT DESCRIPTION

This circuit detects the state of the light control switch.

WIRING DIAGRAM

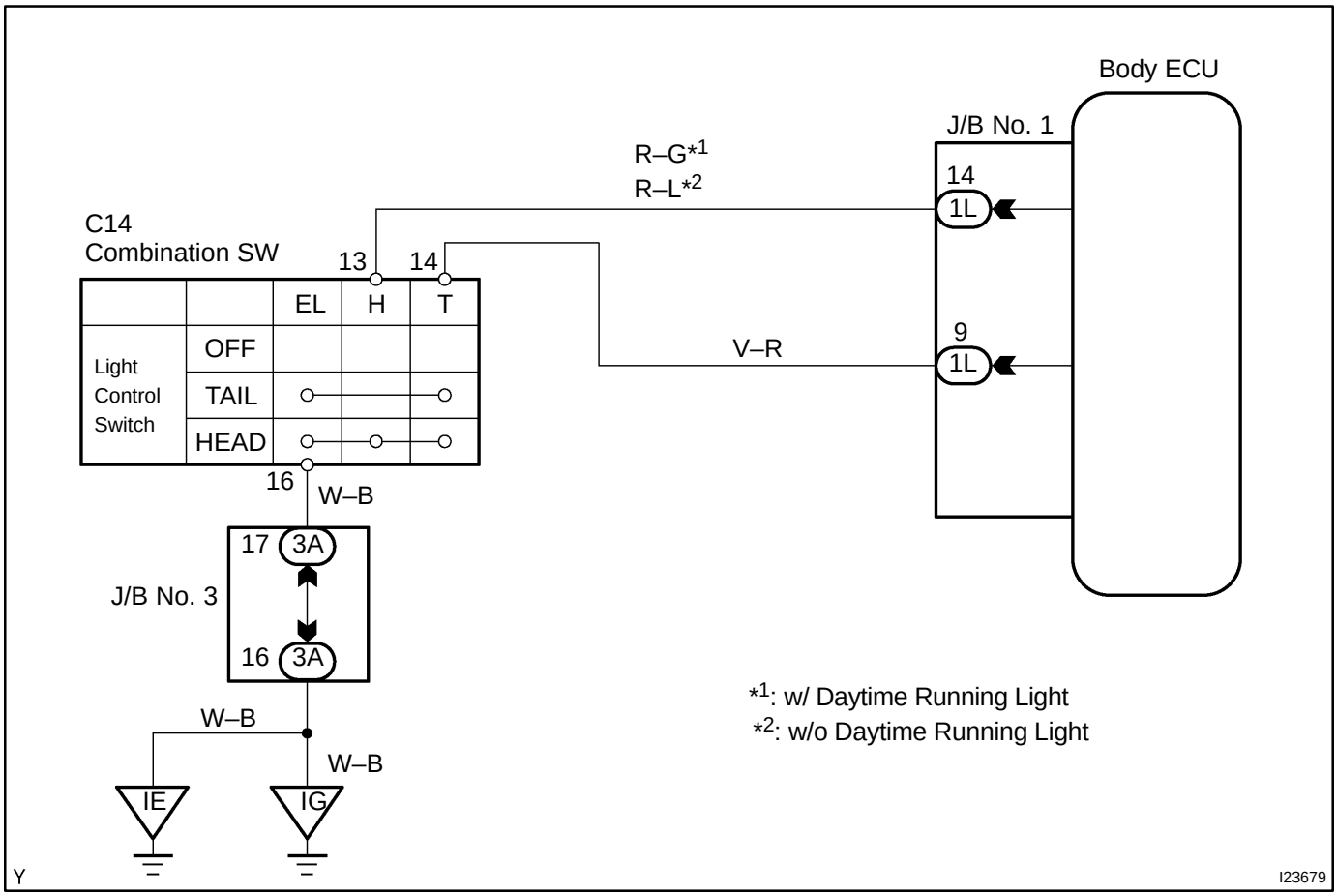

INSPECTION PROCEDURE

1	**Check light control switch (See page BE–17).**

NG → **Replace light control switch.**

OK

2	**Check for harness and connector between light control switch and body ECU (See page IN–28).**

NG → **Repair or replace harness or connector.**

OK

Proceed to next circuit inspection shown in problem symptoms table (See page DI–773).

DI83R–04

Power Main Relay Circuit

CIRCUIT DESCRIPTION

Power main relay (Marking: PWR) will be on by operating the power window switch.

WIRING DIAGRAM

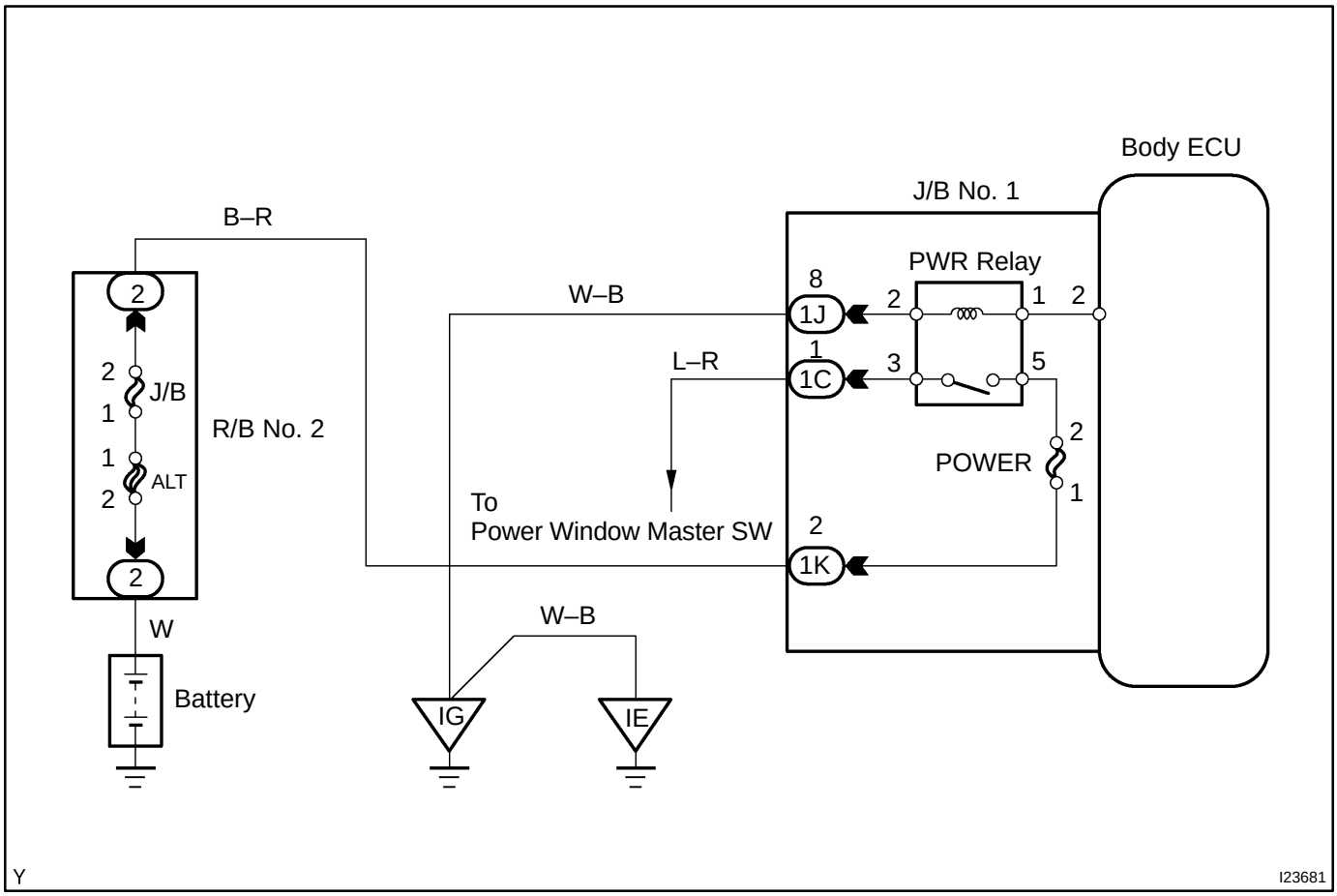

INSPECTION PROCEDURE

1	**Check power main relay (Marking: PWR) (See page BE–17).**

NG → **Replace power main relay.**

OK

2	**Check for harness and connector between power main relay (Marking: PWR) and body ECU, and battery and power main relay.**

NG → **Repair or replace harness or connector.**

OK

Proceed to next circuit inspection shown in problem symptoms table (See page DI–773).

DI7W9–04

CIRCUIT INSPECTION

Power Source Circuit

CIRCUIT DESCRIPTION

This circuit provides power to operate the body ECU.

WIRING DIAGRAM

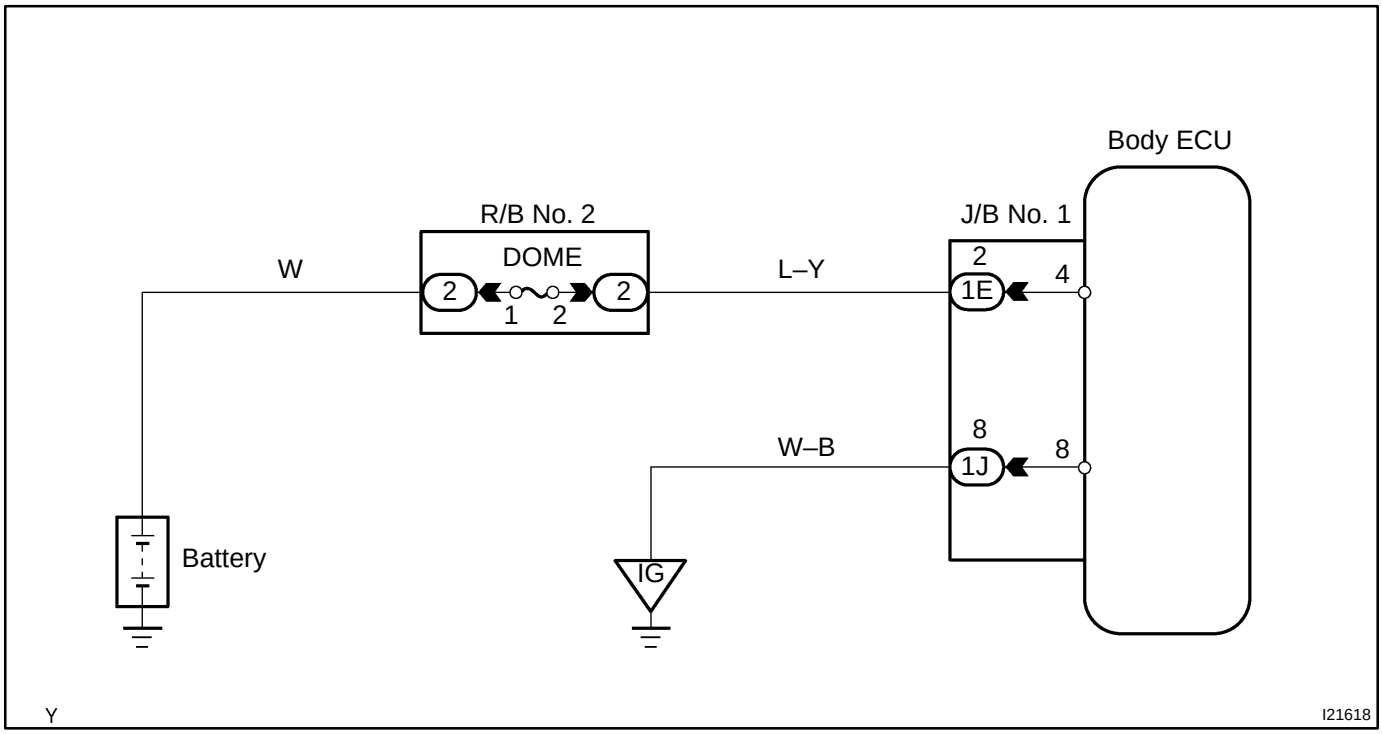

INSPECTION PROCEDURE

1	**Check voltage between terminal 1E–2 and 1J–8 of body ECU connector.**

PREPARATION:

(a) Turn the ignition switch OFF.

(b) Disconnect the body ECU connector.

CHECK:

Measure the voltage between terminal 1E–2 and 1J–8.

OK:

Voltage: 9 – 14 V

OK → **Proceed to next circuit inspection shown in problem symptoms table (See page DI–773).**

NG

2	**Check DOME fuse.**

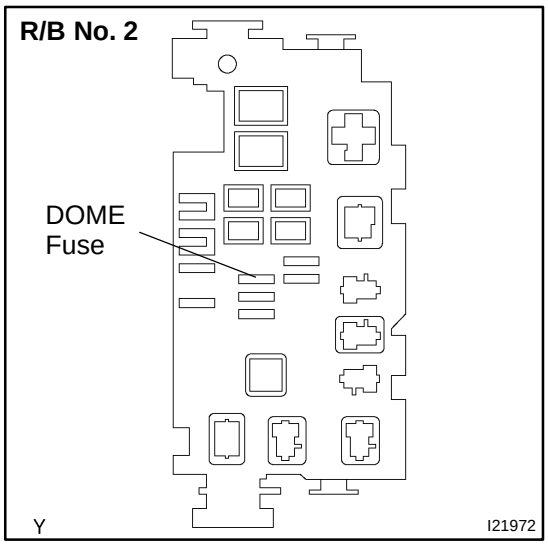

PREPARATION:
Remove the DOME fuse from the R/B No. 2.
CHECK:
Check the continuity of the DOME fuse.
OK:
Continuity

NG → **Replace faulty fuse.**

OK

3	**Check for harness and connector between body ECU and body ground (See page IN–28).**

NG → **Repair or replace harness or connector.**

OK

Check and repair harness or connector between body ECU and battery (See page IN–28).

DI83L–03

Taillight Relay Circuit

CIRCUIT DESCRIPTION

Taillight relay will be on by operating the taillight switch. The transistor which activates the taillight relay has two sorts: one is activated by the taillight switch for fail safe and another is activated by CPU.

WIRING DIAGRAM

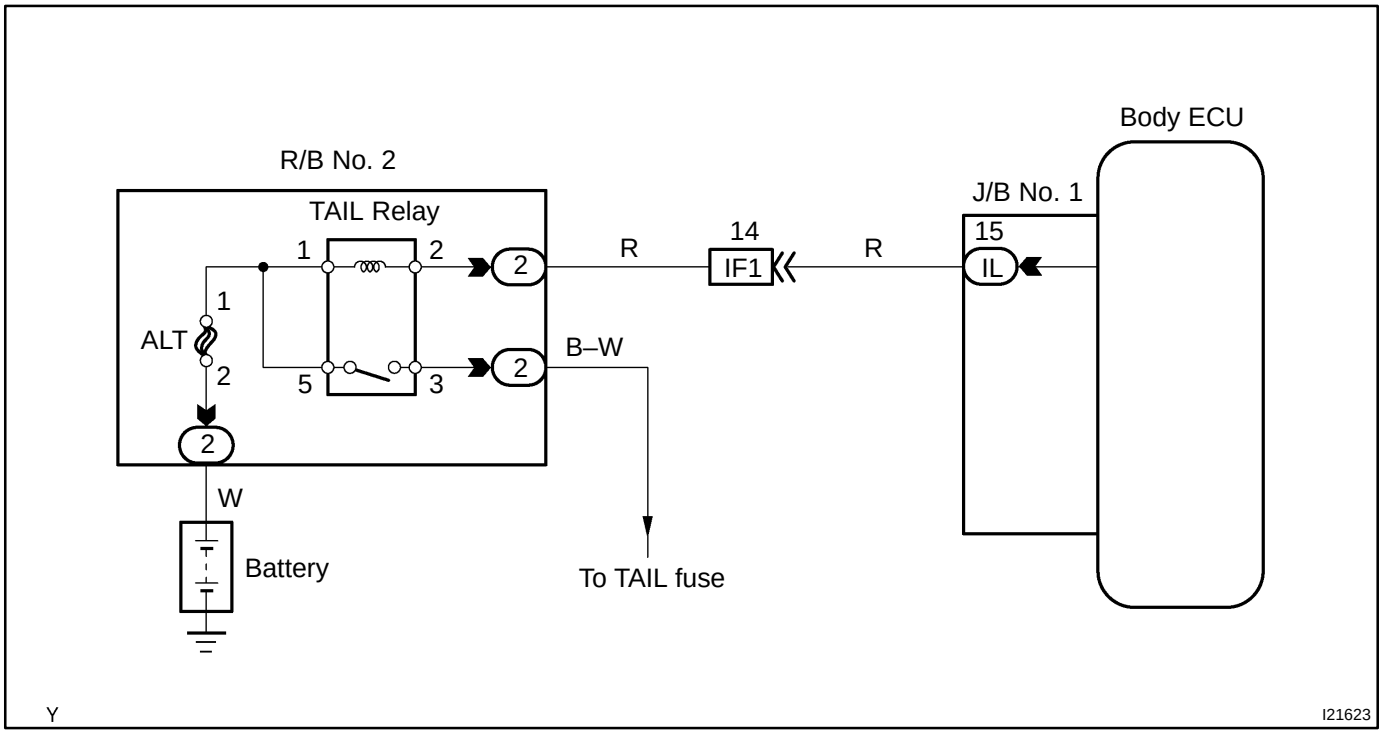

INSPECTION PROCEDURE

1	**Check taillight relay (See page BE–17).**

NG → **Replace taillight relay.**

OK

2	**Check for harness and connector between taillight relay and body ECU, and battery and taillight relay (See page IN–28).**

NG → **Repair or replace harness or connector.**

OK

Proceed to next circuit inspection shown in problem symptoms table (See page DI–773).

DI62D–05

CUSTOMER PROBLEM ANALYSIS CHECK

BODY CONTROL SYSTEM Check Sheet

Inspector's name: _____

Customer's Name		**Registration No.**	
		Registration Year	
		Frame No.	
Date Vehicle Brought in	/ /	**Odometer Reading**	**km mile**

Date Problem First Occurred		/ /
Frequency Problem Occurs		¿ Constant ¿ Sometimes (times per day, month) ¿ Once only
Weather Conditions When Problem Occurred	**Weather**	¿ Fine ¿ Cloudy ¿ Rainy ¿ Snowy ¿ Various/ Others
	Outdoor Temperature	¿ Hot ¿ Warm ¿ Cool ¿ Cold (Approx. °F (°C))

Malfunction System	¿ Key Unlock Warning System
	¿ Combination Meter (Open door warning light)
	¿ Power Window Control System
	¿ Power Door Lock Control System
	¿ Others

BODY CONTROL SYSTEM

DI62C–11

HOW TO PROCEED WITH TROUBLESHOOTING

Troubleshoot in accordance with the procedure on the following pages.

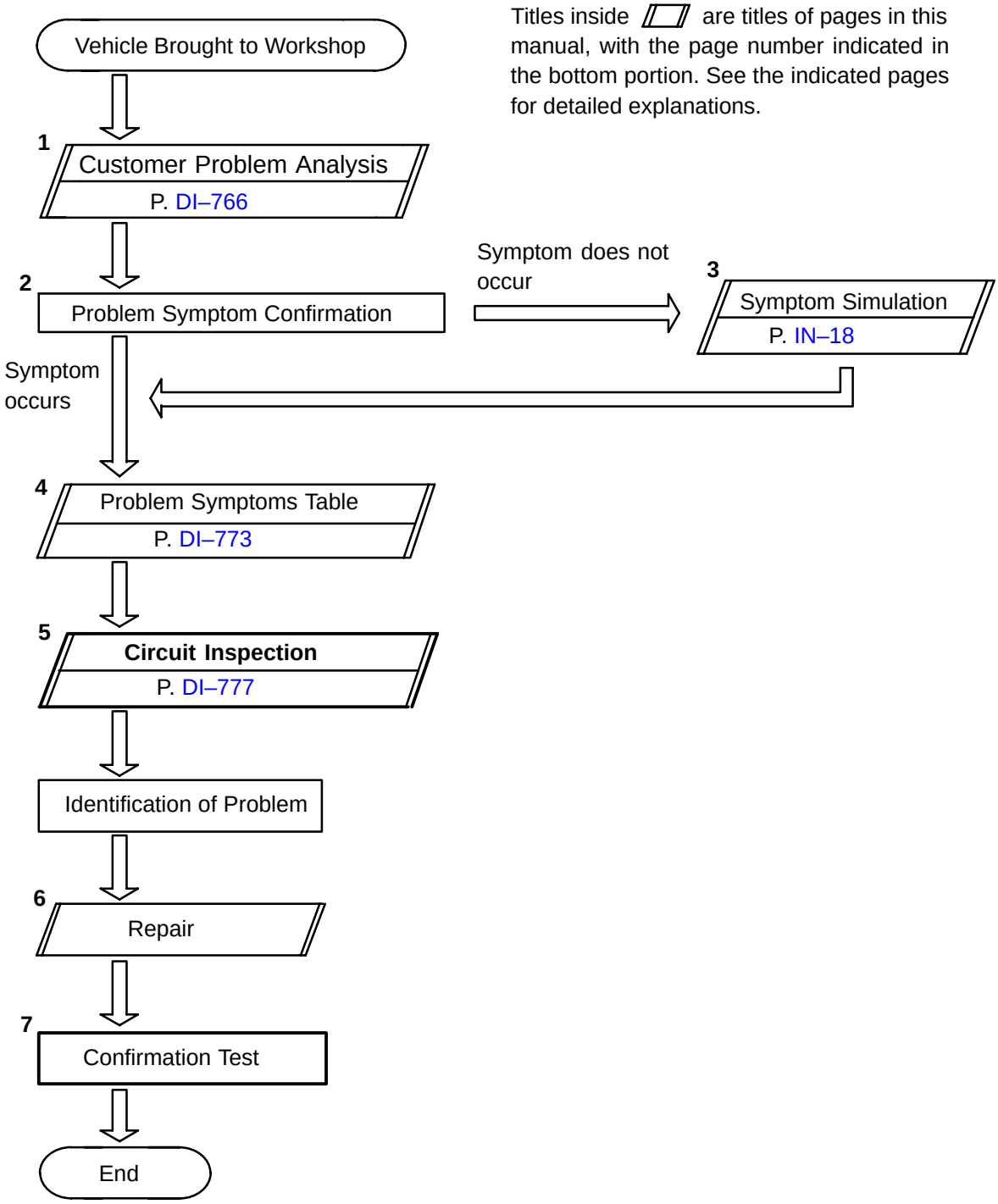

Titles inside ▱ are titles of pages in this manual, with the page number indicated in the bottom portion. See the indicated pages for detailed explanations.

DI3CC–04

PARTS LOCATION

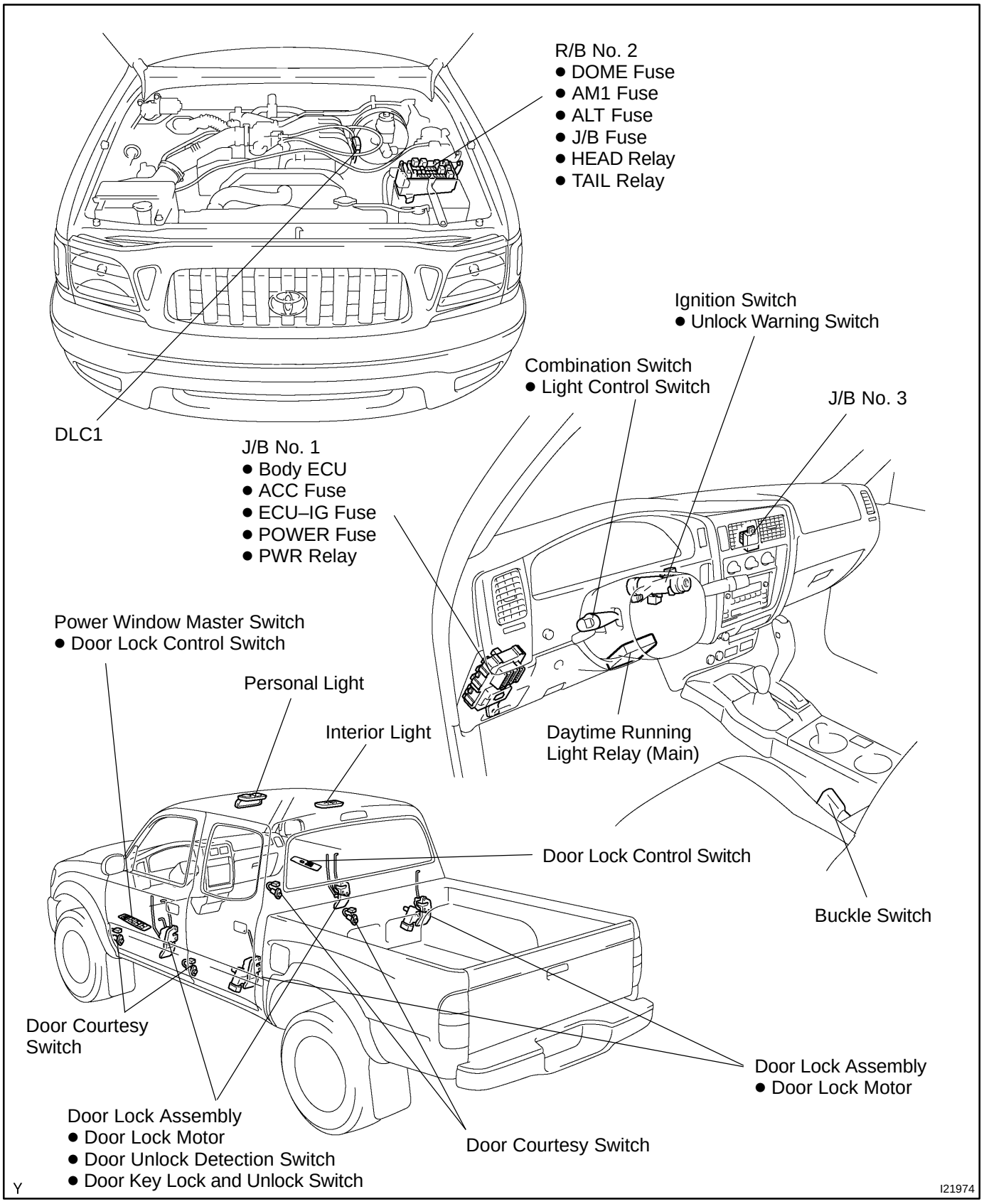

DI7FX–04

PROBLEM SYMPTOMS TABLE

IGNITION SWITCH AND KEY UNLOCK WARNING SWITCH

Symptom	Suspected Area	See page
Ignition switch is not set to each position	1. Ignition switch	BE–14
”Key unlock warning system” does not operate	1. Body ECU 2. GAUGE fuse 3. Key unlock warning switch circuit 4. Key unlock warning switch 5. Door courtesy switch circuit 6. Door courtesy switch 7. Combination meter 8. Wire harness	IN–28 DI–779 DI–790 BE–14 DI–802 BE–24 BE–39 IN–28

HEADLIGHT AND TAILLIGHT SYSTEM

Symptom	Suspected Area	See page
Headlight does not light (Taillight is normal)	1. Body ECU 2. HEAD fuse (LH, RH) 3. Headlight relay circuit 4. Headlight dimmer switch 5. Light control switch circuit 6. Light control switch 7. Headlight bulb 8. Wire harness	IN–28 BE–10 DI–786 BE–17 DI–784 BE–17 – IN–28
Headlight does not light (Taillight does not light)	1. Body ECU 2. Light control switch circuit 3. Light control switch 4. Headlight bulb 5. Wire harness	IN–28 DI–784 BE–17 – IN–28
Only one side headlight does not light	1. HEAD fuse (LH, RH) 2. Headlight bulb 3. Wire harness	BE–10 – IN–28
”Lo–Beam” does not light (ALL)	1. Body ECU 2. Headlight dimmer switch 3. Wire harness	IN–28 BE–17 IN–28
”Lo–Beam” does not light (ONE SIDE)	1. HEAD LH fuse 2. HEAD RH fuse 3. Headlight bulb 4. Wire harness	BE–10 BE–10 – IN–28
”Hi–Beam” does not light (ALL)	1. Body ECU 2. Headlight dimmer switch 3. Wire harness	IN–28 BE–17 IN–28
”Hi–Beam” does not light (ONE SIDE)	1. HEAD LH fuse 2. HEAD RH fuse 3. Headlight bulb 4. Wire harness	BE–10 BE–10 – IN–28
”Flash” does not light	1. Body ECU 2. Headlight dimmer switch 3. Wire harness	IN–28 BE–17 IN–28
”Light–on warning system” does not operate	1. Body ECU 2. GAUGE fuse 3. Door courtesy switch circuit 4. Door courtesy switch (Driver’s) 5. Combination meter 6. Wire harness	IN–28 DI–779 DI–802 BE–24 BE–39 IN–28

Headlight does not light with light control SW in HEAD	1. Body ECU 2. Light control switch circuit 3. Light control switch 4. Wire harness	IN–28 DI–784 BE–17 IN–28
Headlight does not go off with light control SW in OFF	1. Body ECU 2. Light control switch circuit 3. Light control switch 4. Wire harness	IN–28 DI–784 BE–17 IN–28
Taillight does not light with light control SW in TAIL	1. Body ECU 2. Taillight control relay circuit 3. Taillight control relay 4. Light control switch circuit 5. Light control switch 6. Wire harness	IN–28 DI–788 BE–17 DI–784 BE–17 IN–28
Taillight does not go off with light control SW in OFF	1. Body ECU 2. Taillight control relay circuit 3. Taillight control relay 4. Light control switch circuit 5. Light control switch 6. Wire harness	IN–28 DI–788 BE–17 DI–784 BE–17 IN–28

INTERIOR LIGHT SYSTEM

Symptom	Suspected Area	See page
Only one light does not light.	1. Bulb 2. Wire harness	– IN–28
Interior light does not light (All).	1. Body ECU 2. DOME fuse 3. Wire harness	IN–28 BE–10 IN–28
Interior light does not light (Interior light only).	1. Bulb 2. Interior light assembly 3. Wire harness	– BE–24 IN–28
”Illuminated Entry System” does not operate.	1. Body ECU 2. Illumination circuit 3. Door courtesy switch circuit 4. Door unlock detection switch circuit 5. Wire harness	IN–28 DI–782 DI–802 DI–796 IN–28
Front personal light does not light.	1. Body ECU 2. Bulb 3. Front personal light 4. Wire harness	IN–28 – BE–24 IN–28

Warning Lights:

COMBINATION METER

Symptom	Suspected Area	See page
Seat belt warning light does not light	1. Body ECU 2. LED 3. Buckle switch circuit 4. Meter circuit plate 5. Wire harness	IN–28 – BE–39 BE–37 IN–28
Door open warning light does not light	1. Body ECU 2. LED 3. DOME fuse 4. Door courtesy switch circuit 5. Door courtesy switch 6. Meter circuit 7. Wire harness	IN–28 – BE–10 DI–802 BE–24 DI–765 IN–28

POWER WINDOW CONTROL SYSTEM

Symptom	Suspected Area	See page
Power window does not operate	1. Body ECU 2. POWER fuse 3. Ignition switch 4. Power window control switch 5. Wire harness	IN–28 BE–10 BE–14 BE–48 IN–28
”One touch power window system” does not operate	1. Body ECU 2. Power window control switch	IN–28 BE–48
Only one window glass does not move	1. Body ECU 2. Power window control switch 3. Power window motor 4. Wire harness	IN–28 BE–48 BE–48 IN–28
”Window lock system” does not operate	1. Body ECU 2. Power window control switch	IN–28 BE–48
Illumination does not light	1. Body ECU 2. Power window control switch	IN–28 BE–48

POWER DOOR LOCK CONTROL SYSTEM

Symptom	Suspected Area	See page
”Door lock control system” does not operate (ALL)	1. Body ECU 2. GAUGE fuse 3. Wire harness 4. Other parts	IN–28 DI–779 IN–28 –
Malfunction in door lock / unlock (Using door manual switch)	1. Body ECU 2. Door lock control switch circuit 3. Door lock control switch 4. Wire harness 5. Other parts	IN–28 DI–800 BE–54 IN–28 –
Malfunction in door lock/unlock (Using door manual switch and key)	1. Body ECU 2. Wire harness 3. Other parts	IN–28 IN–28 –
Malfunction in door lock/unlock (Using key)	1. Body ECU 2. Door unlock detection switch circuit 3. Door unlock detection switch 4. Wire harness 5. Other parts	IN–28 DI–796 BE–54 IN–28 –
Fault in 2–operation unlock function of driver’s side door key lock and unlock switch	1. Body ECU 2. Door unlock detection switch circuit 3. Door unlock detection switch 4. Wire harness 5. Other parts	IN–28 DI–796 BE–54 IN–28 –
Fault in key confine prevention operation	1. Body ECU 2. Door unlock detection switch circuit 3. Door unlock detection switch 4. Door courtesy switch circuit 5. Door courtesy switch 6. Door lock control switch circuit 7. Door lock control switch 8. Wire harness 9. Other parts	IN–28 DI–796 BE–54 DI–802 BE–24 DI–800 BE–54 IN–28 –
Only one door lock does not operate	1. Body ECU 2. Door lock motor circuit 3. Door lock motor 4. Wire harness	IN–28 DI–794 BE–54 IN–28

OTHERS

Symptom	Suspected Area	See page
Body ECU does not operate	1. Body ECU 2. Power source circuit	IN–28 DI–777
The flashing frequency is abnormal	1. Body ECU 2. Bulb 3. Turn signal flasher relay 4. Wire harness	IN–28 – BE–22 IN–28

DI8ZS–02

TERMINALS OF ECU

J/B No. 1 Inner Circuit

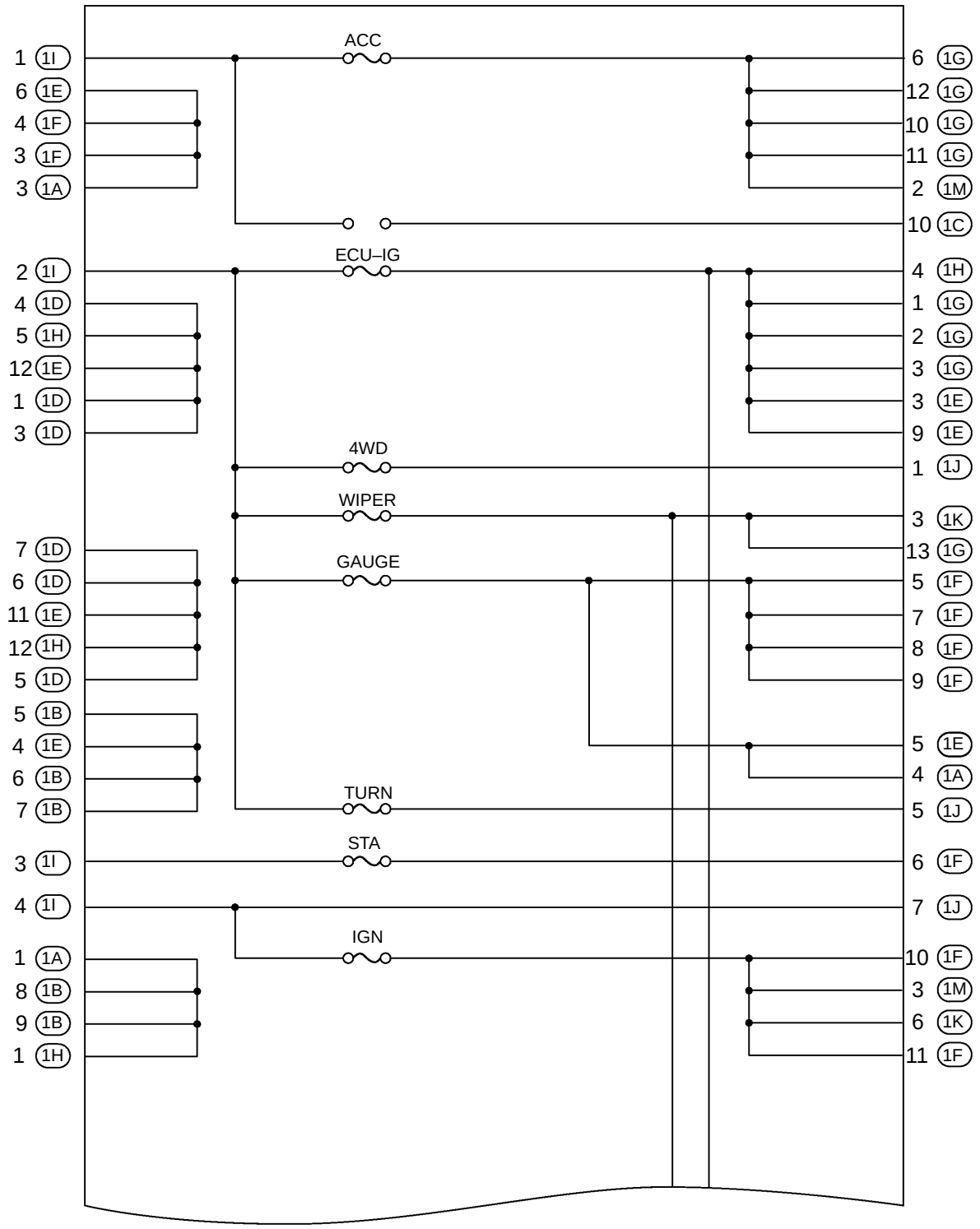

Cont. next page

Y

I21615

J/B No. 1 Inner Circuit

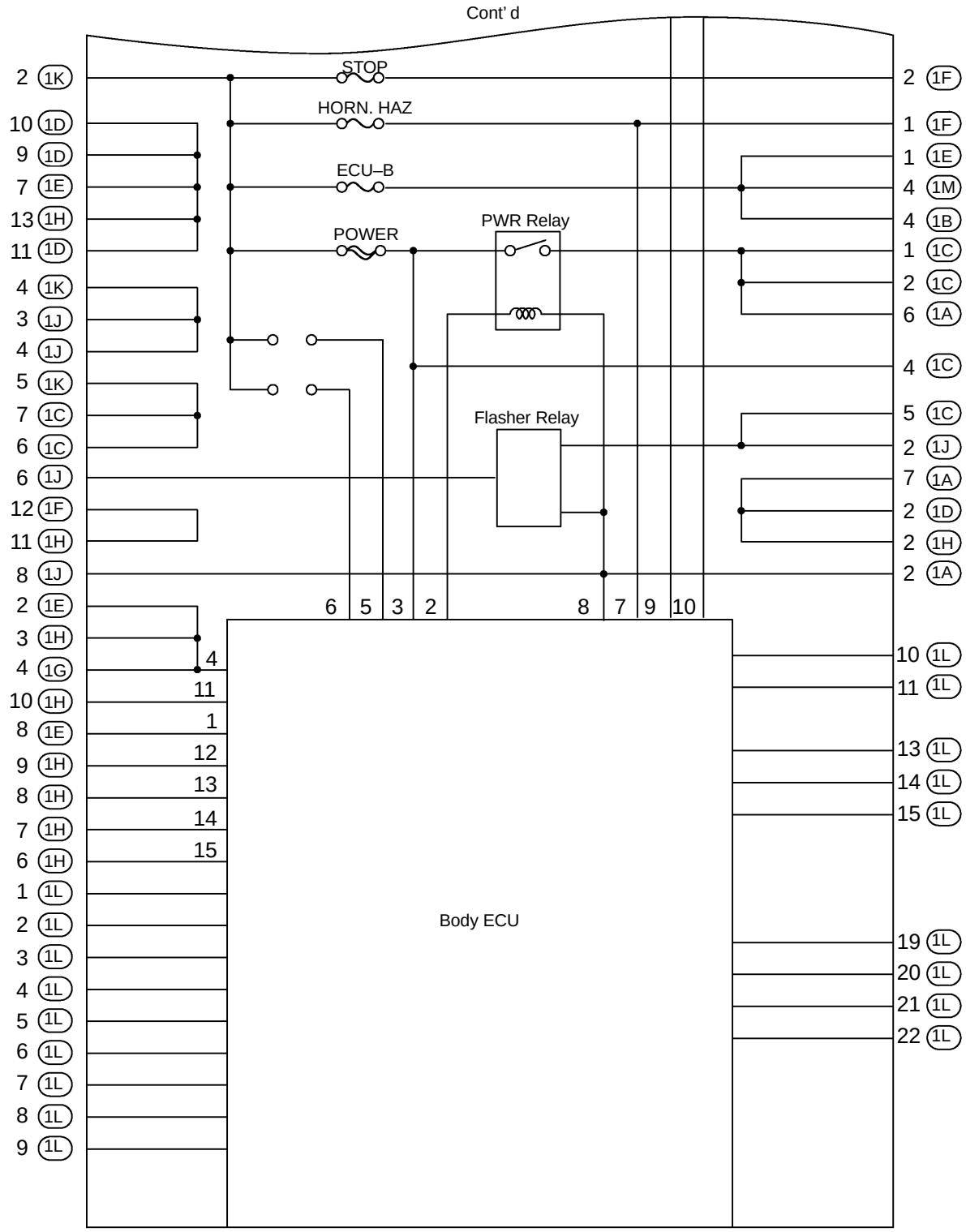

J/B No. 1

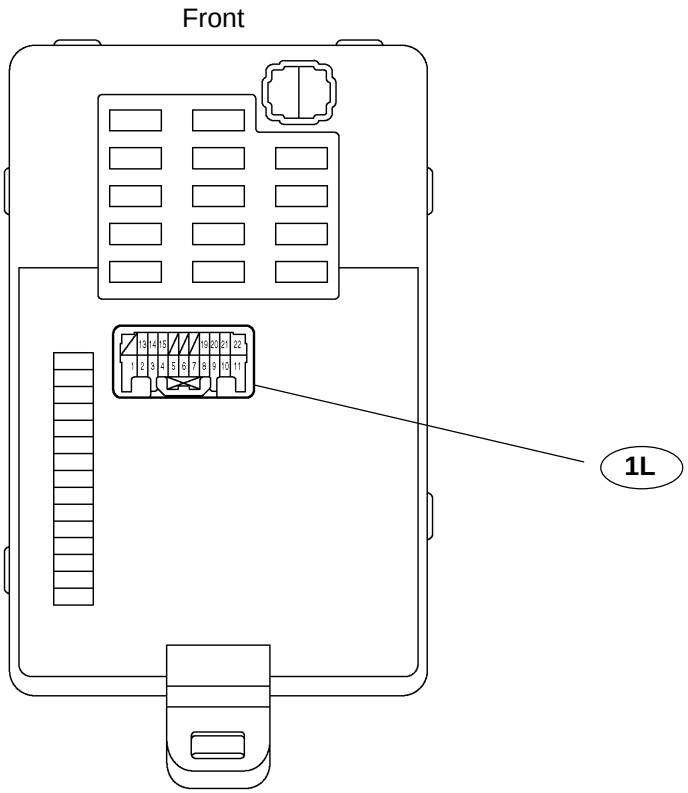

Y

I21617

J/B No. 1

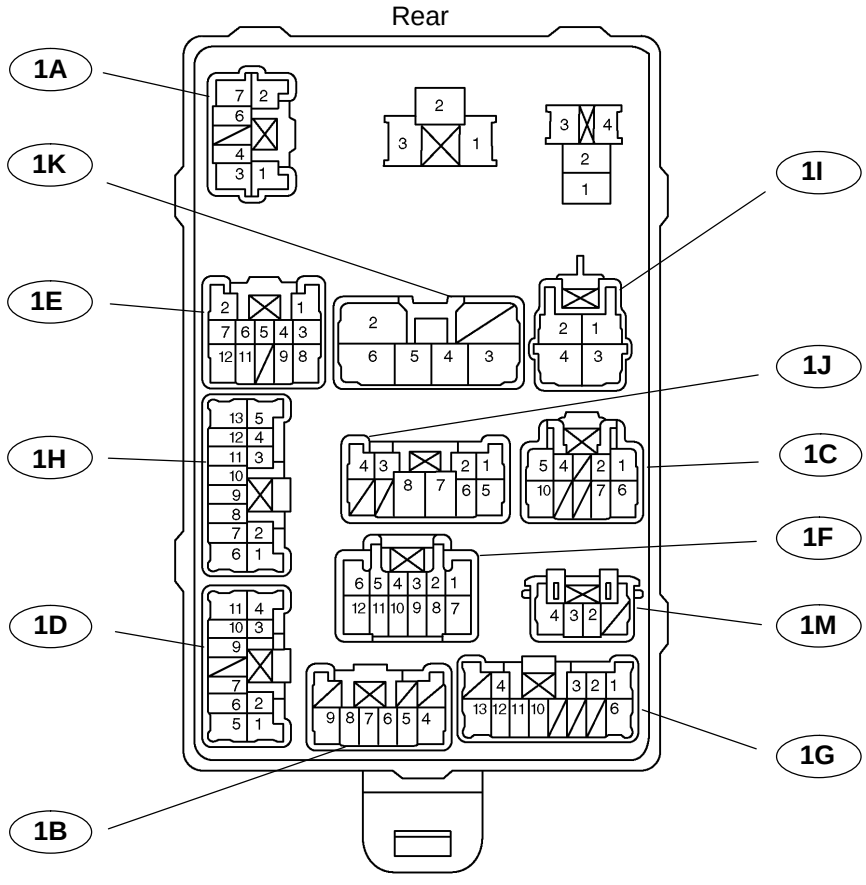

Y

I21614

Symbols (Terminal No.)	Wiring Color	Condition	STD Voltage (V)
1E–2 – 1J–8	L–Y – W–B	Always	9 – 14
1H–10 – 1J–8	B – W–B	Always	9 – 14
1K–2 – 1J–8	B–R – W–B	Always	9 – 14
1F–1 – 1J–8	L–W – W–B	Always	9 – 14
1I–2 – 1J–8	B–Y – W–B	Ignition switch OFF	Below 1
		Ignition switch ON	9 – 14
1L–19 – 1J–8	B – W–B	Ignition switch OFF	Below 1
		Ignition switch ON	9 – 14
1L–20 – 1J–8	Y–B – W–B	Ignition switch OFF	Below 1
		Ignition switch ACC or ON	9 – 14
1H–9 – 1J–8	B–W – W–B	Any one of doors opened	Below 1
		All doors closed	9 – 14
1L–14 – 1J–8	R–L*1, R–G*2 – W–B	Light control switch OFF or TAIL	Approx. 5.7
		Light control switch HEAD	Below 1
1L–13 – 1J–8	R–W*1, G–Y*2 – W–B	Light control switch OFF	9 – 14
		Light control switch TAIL or HEAD	Below 1
1L–9 – 1J–8	V–R – W–B	Light control switch OFF	9 – 14
		Light control switch TAIL or HEAD	Below 1
1L–8 – 1J–8	LG–R – W–B	Key inserted	Below 1
		Key not inserted	9 – 14
1L–2 – 1J–8	G–B – W–B	Driver door unlocked	Below 1
		Driver door locked	Approx. 5.7
1L–1 – 1J–8	L–R – W–B	Passenger door unlocked	Below 1
		Passenger door locked	Approx. 5.7
1L–22 – 1J–8	B–L – W–B	Door lock manual switch OFF or UNLOCK	Below 1
		Door lock manual switch LOCK	Approx. 5
1L–21 – 1J–8	R–Y – W–B	Door lock manual switch OFF	Below 1
		Door lock manual switch UNLOCK	Approx. 5
1L–7 – 1J–8	GR – W–B	Door key lock and unlock switch OFF	Approx. 5
		Door key lock and unlock switch ON	Below 1
1L–6 – 1J–8	L–B – W–B	Driver door key lock and unlock switch OFF	Approx. 5
		Driver door key lock and unlock switch ON	Below 1
1L–5 – 1J–8	V – W–B	Passenger door key lock and unlock switch OFF	Approx. 5
		Passenger door key lock and unlock switch ON	Below 1
1H–6 – 1J–8	L – W–B	Door lock operating to lock	9 – 14
1H–7 – 1J–8	L–W – W–B	Door lock operating to unlock	9 – 14
1L–11 – 1J–8	G – W–B	Driver door opened	Below 1
		Driver door closed	9 – 14
1L–4 – 1J–8	G–W – W–B	Passenger door opened	Below 1
		Passenger door closed	9 – 14
1L–10 – 1J–8	Y–G – W–B	Rear door opened	Below 1
		Rear door closed	9 – 14
1L–15 – 1J–8	R – W–B	Light control switch OFF	9 – 14
		Light control switch TAIL or HEAD	Below 1

1L–3 – 1J–8	LG–B – W–B	With seat belt ON	Below 1
		No seat belt ON	9 – 14
1H–8 – 1J–8	G–R – W–B	Horn switch ON	Below 1
		Horn switch OFF	9 – 14
1E–8 – 1J–8	B – W–B	Horn sound	Below 1
		Horn does not sound	9 – 14
1J–8 – Body Ground	W–B – Body Ground	Constant	Below 1

*1: w/o Daytime running light

*2: w/ Daytime running light

DIA7W–02

Control Switch Circuit (Cruise Control Switch)

CIRCUIT DESCRIPTION

This circuit Sends the SET/COAST, RES/ACC and CANCEL signals (each voltage) to the ECM.

WIRING DIAGRAM

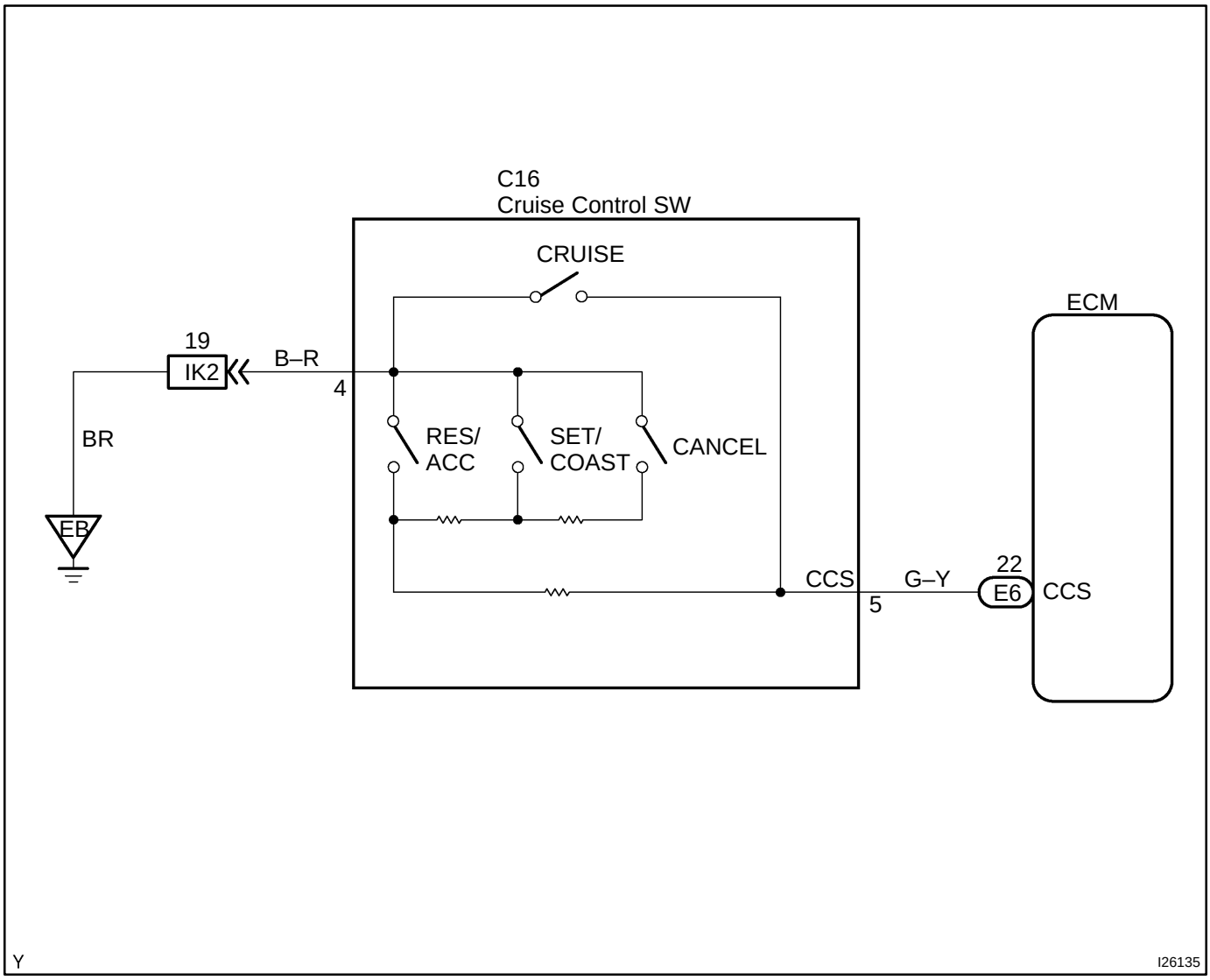

INSPECTION PROCEDURE

1	**Check voltage between terminal CCS of ECM connector and body ground.**

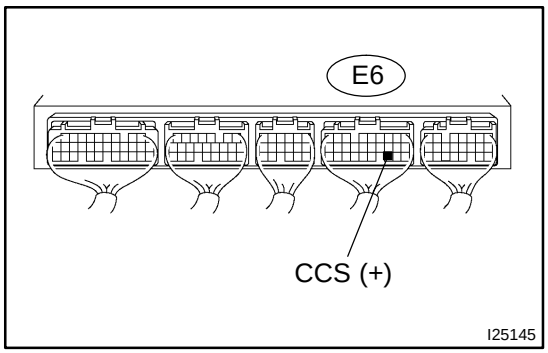

PREPARATION:

(a) Remove the ECM with the connector being connected.

(b) Turn the ignition switch ON.

CHECK:

Measure the voltage between terminals E6–22 (CCS) of the ECM connector and the body ground when each control switch is operated.

Switch position	Voltage
Neutral	9 – 14 V
RES/ACC	2.1 – 4.0 V
SET/COAST	4.0 – 7.1 V
CANCEL	6.0 – 10.1 V

NG → **Proceed to next circuit inspection shown in problem symptoms table (See page DI–700).**

OK

2	Check control switch.

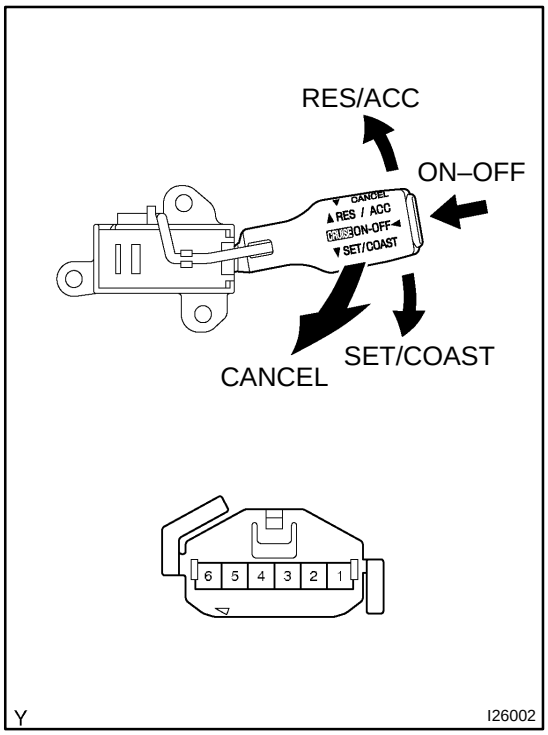

PREPARATION:

(a) Remove the steering wheel center pad.

(b) Disconnect the control switch connector.

CHECK:

(a) Measure the resistance between terminals 4 and 5 of the control switch connector when the control switch is operated.

OK:

Switch Position	Resistance
Neutral	∞ (No continuity)
RES/ACC	235 – 245 Ω
SET/COAST	617 – 643 Ω
CANCEL	1509 – 1571 Ω

(b) Check the continuity between terminals 4 and 5 of the control switch connector when the main switch is held on and off.

OK:

Switch Position	Tester connection	Specified condition
OFF	–	No continuity
ON	4 – 5	Continuity

NG → **Replace control switch.**

OK

3	Check harness and connector between ECM and cruise control switch, and cruise control switch and body ground (See page IN–28).

NG → **Repair or replace harness or connector.**

OK

4	Check CRUISE MAIN indicator light (See page DI–713).

NG → Replace combination meter.

OK →

Check and replace ECM (See page IN–28).

DIA7U–03

Clutch Switch Circuit (M/T)

CIRCUIT DESCRIPTION

When the clutch pedal is depressed, the clutch switch sends a signal to the ECM. When the signal is input to the ECM during cruise control driving, the ECM cancels the cruise control.

WIRING DIAGRAM

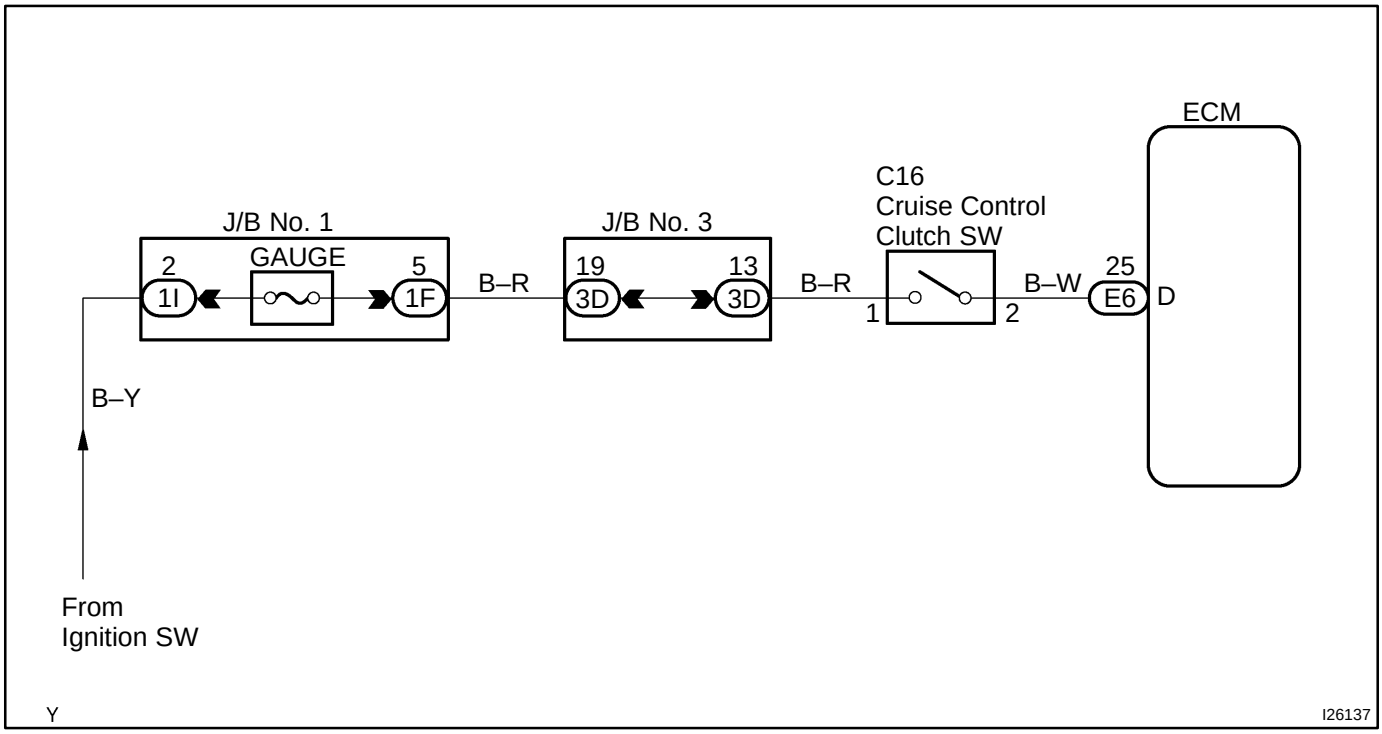

INSPECTION PROCEDURE

1	**Check starter operation.**

CHECK:

Check that the starter operates normally and that the engine starts.

NG → **Proceed to engine troubleshooting.**

OK

2	Check input signal.

Input Signal	Indicator Light Blinking Pattern
Turn PNP Switch OFF (Shift into positions except D)	Light ON SW ON, OFF SW OFF

PREPARATION:

See the input signal check on page DI–691.

CHECK:

Check the indicator light when shifting into any positions except D.

OK:

The indicator light goes off when shifting into any positions except D.

OK → **Proceed to next circuit inspection shown in problem symptoms table (See page DI–700).**

NG

3	Check voltage between terminal D of ECM connector and body ground.

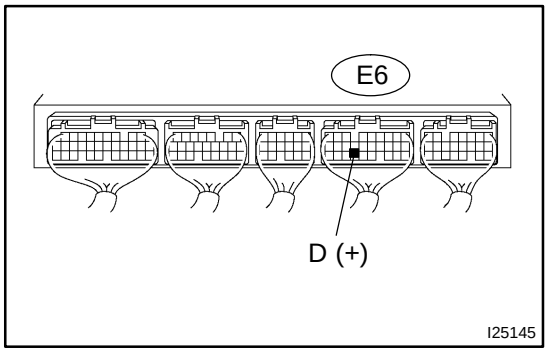

PREPARATION:

Turn the ignition switch ON.

CHECK:

Measure the voltage between terminal E6–25 (D) of the ECM connector and the body ground when the clutch pedal is depressed and released.

OK:

Clutch Pedal	Voltage
Released	10 – 14 V
Depressed	Below 1 V

OK → **Proceed to next circuit inspection shown in problem symptoms table (See page DI–700).**

NG

4	**Check wire harness and connector between ECM and GAUGE fuse (See page IN–28).**

NG → **Repair or replace harness or connector.**

OK

Check and replace ECM (See page IN–28).

DIA7V–02

CRUISE MAIN Indicator Light Circuit

CIRCUIT DESCRIPTION

When the cruise control main switch is turned ON, the CRUISE MAIN indicator light lights up.

WIRING DIAGRAM

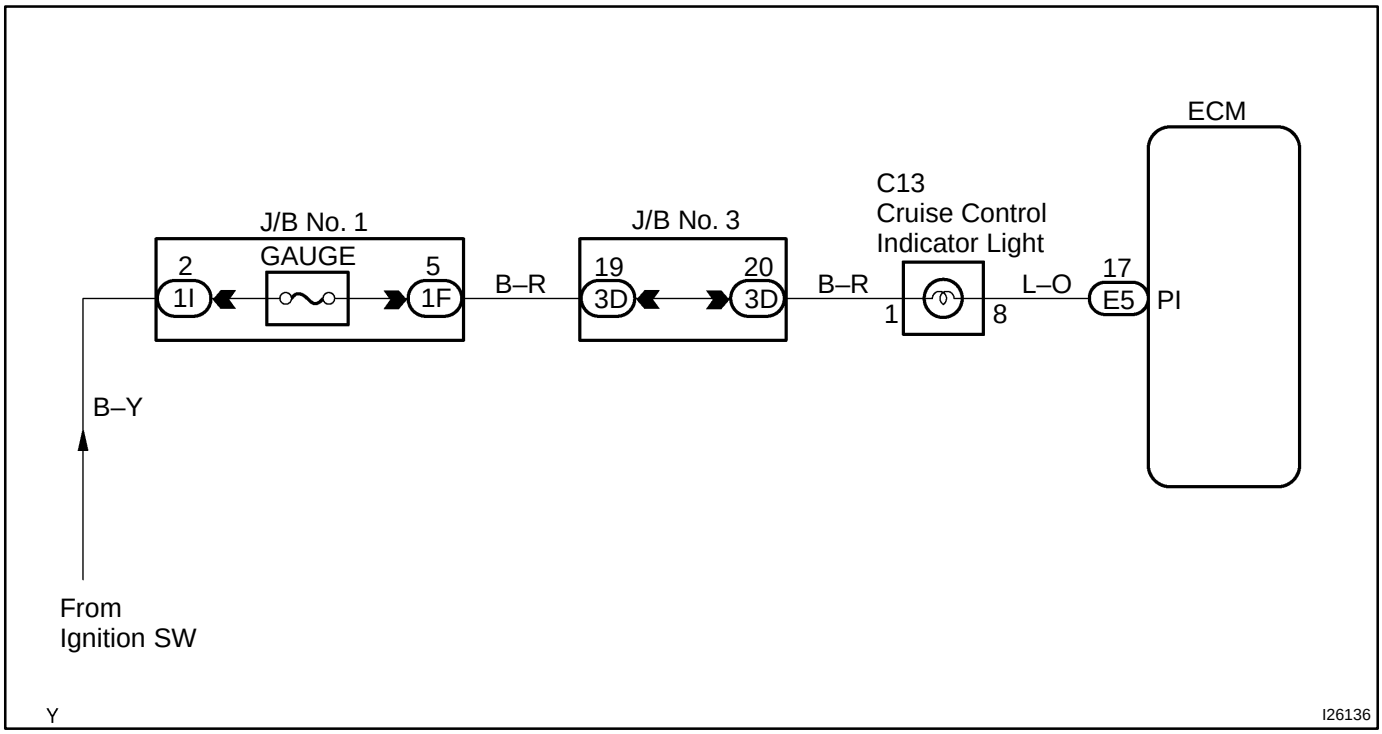

INSPECTION PROCEDURE

1	**Check voltage between terminal PI of ECM connector and body ground.**

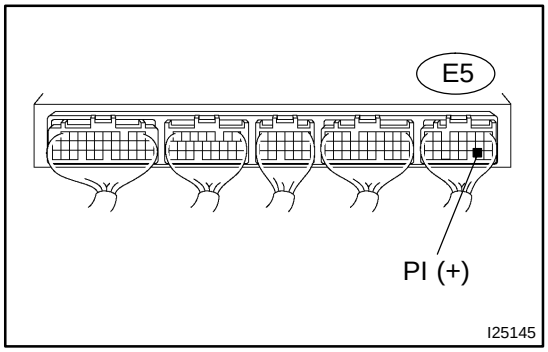

PREPARATION:
Turn the ignition switch ON.
CHECK:
Measure the voltage between terminal E5–17 (PI) of the ECM connector and the body ground, when the main switch is ON and OFF.
OK:

Switch Position	Voltage
OFF	10 – 16 V
ON	Below 1.2 V

OK → **Proceed to next circuit inspection shown in problem symptoms table (See page DI–700).**

NG

2	**Check combination meter (See page BE–2).**

NG → **Replace combination meter.**

OK

Check and replace ECM (See page IN–28).

DI8ZM–04

Park/Neutral Position Switch Circuit (A/T)

CIRCUIT DESCRIPTION

When the shift position is except D, a signal is sent from the park/neutral position switch to the ECM. When this signal is input during the cruise control driving, the ECM cancels the cruise control.

WIRING DIAGRAM

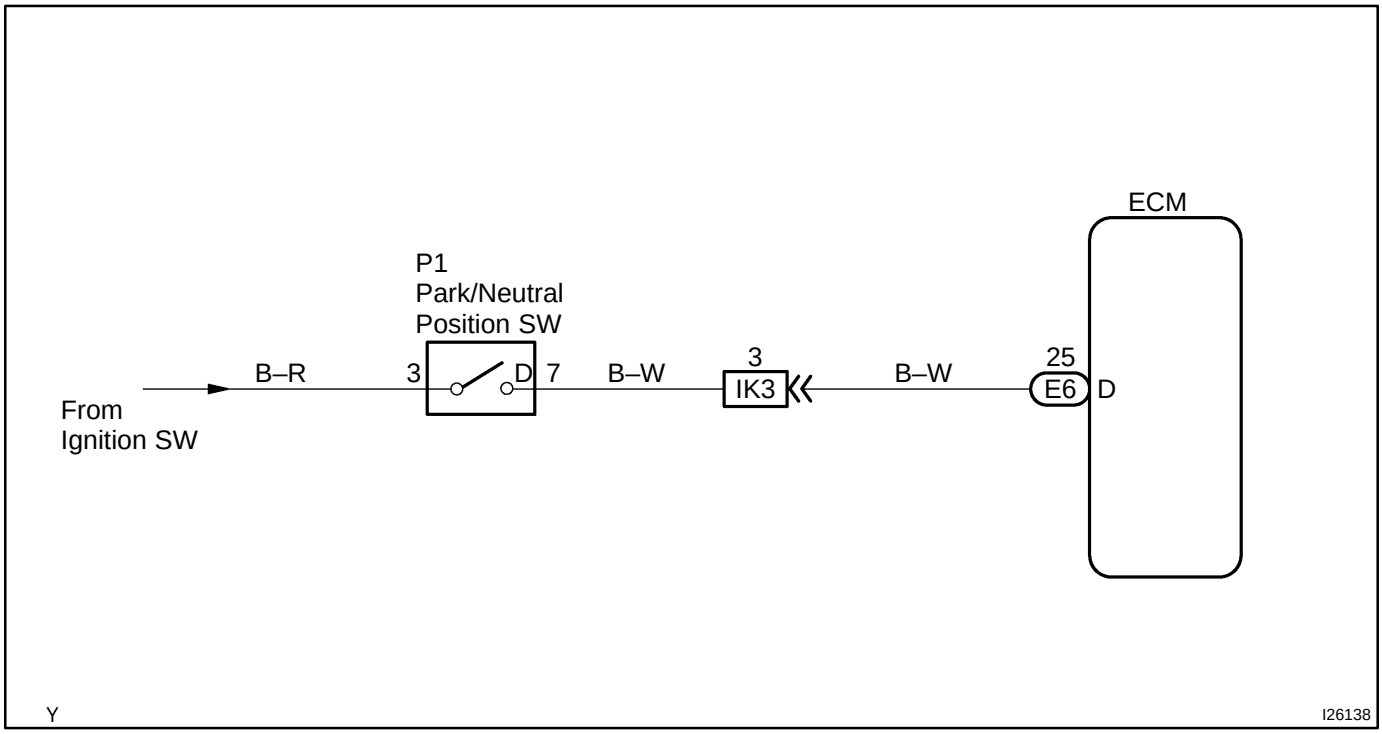

INSPECTION PROCEDURE

1	**Check starter operation.**

CHECK:

Check that the starter operates normally and that the engine starts.

NG → **Proceed to engine troubleshooting.**

OK

2	Check input signal

Input Signal	Indicator Light Blinking Pattern
Turn PNP Switch OFF (Shift to positions except D)	Light: ON (SW ON) / OFF (SW OFF)

PREPARATION:
See the input signal check on page DI–691.
CHECK:
Check the indicator light when shifting into positions except D.
OK:

The indicator light goes off when shifting into positions except D.

OK → **Proceed to next circuit inspection shown in problem symptoms table (See page DI–700).**

NG

3	Check voltage between terminal D of ECM connector and body ground.

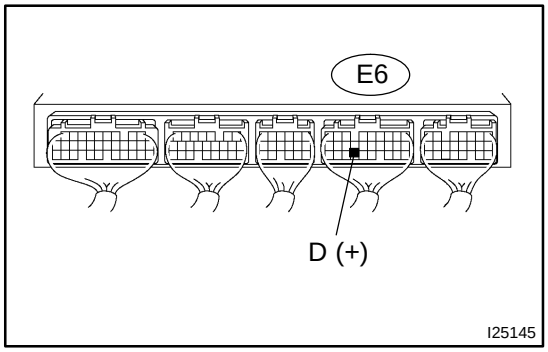

PREPARATION:
Turn the ignition switch ON.
CHECK:
Measure the voltage between terminal E6–25 (D) of the ECM connector and the body ground when shifting into the D position and other positions.
OK:

Shift Position	Voltage
D position	10 – 16 V
Other positions	Below 1 V

OK → **Proceed to next circuit inspection shown in problem symptoms table (See page DI–700).**

NG

4	**Check harness and connector between ECM and park/neutral position switch (See page IN–28).**

NG → **Repair or replace harness or connector.**

OK

Check and replace cruise control ECU (See page IN–28).

DIA7S–02

CIRCUIT INSPECTION

DTC	P0500/21	Vehicle Speed Sensor ”A”

DTC	P0503/23	Vehicle Speed Sensor ”A” Intermittent/Erratic/High

CIRCUIT DESCRIPTION

See page DI–378.

DTC No.	DTC Detection Condition	Trouble Area
P0500/42 P0503/23	No vehicle speed sensor signal to ECM under following conditions (a) and (b): (2 trip detection logic) (a) Park/neutral position switch is OFF (b) Vehicle is being driven	• Combination meter • Open or short in vehicle speed sensor circuit • Vehicle speed sensor • ECM

WIRING DIAGRAM

See page DI–378.

INSPECTION PROCEDURE

See page DI–378.

DTC	P0571/52	Brake Switch ”A” Circuit

CIRCUIT DESCRIPTION

When the brake pedal is depressed, the stop light switch sends a signal to the ECM. When the ECM receives this signal, it cancels the cruise control.
A fail–safe function is provided so that the functions normally, even if there is a malfunction in the stop light signal circuit.
The cancel condition occurs as battery positive voltage is supplied to terminal STP.
When the brake is on, battery positive voltage is normally applied through the STOP fuse and the stop light switch to terminal STP of the ECM, and the ECM turns the cruise control OFF.
If the harness connected to terminal STP has an open circuit, terminal STP will have battery positive voltage and the cruise control will be turned OFF.

DTC No.	DTC Detection Condition	Trouble Area
P0571/52	Stop light switch does not turn off even once the vehicle is driven (2 trip detection logic)	• Short in stop light switch signal circuit • Stop light switch • ECM

WIRING DIAGRAM

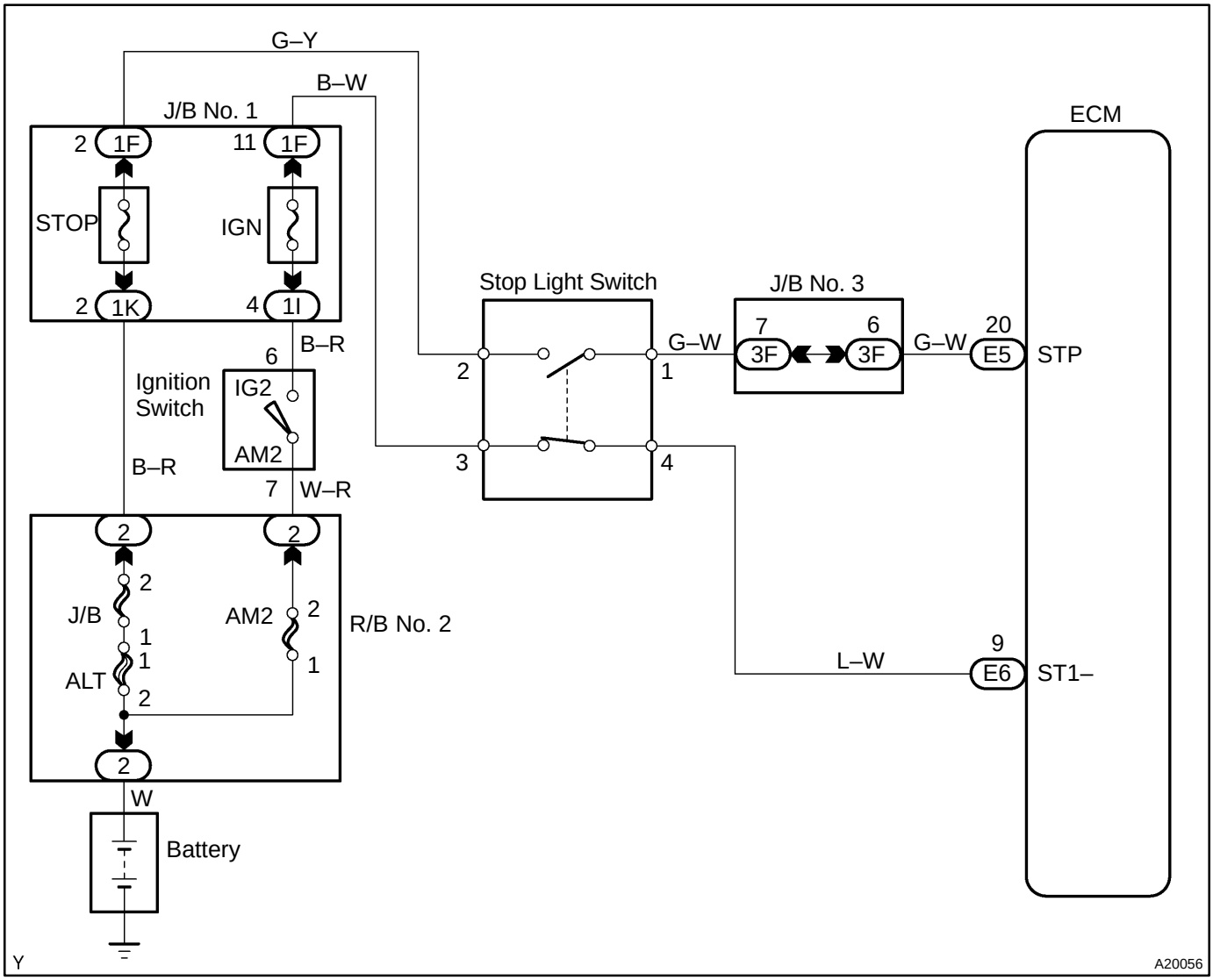

INSPECTION PROCEDURE

HINT:

Read freeze frame data using the hand–held tester or the OBD II scan tool, as freeze frame data records the engine conditions when a malfunction is detected. When troubleshooting, it is useful for determining whether the vehicle was running or stopped, the engine was warmed up or not, the air–fuel ratio was lean or rich, etc. at the time of the malfunction.

Hand–held tester:

1	**Check stop light switch using hand–held tester.**

PREPARATION:

Connect the hand–held tester to the DLC3.

(a) Connect the hand–held tester to the DLC3.

(b) Turn the ignition switch ON and push the hand–held tester main SW ON.

CHECK:

Select the item ”STOP LIGHT SW” in the DATA LIST and read its valve displayed.

OK:

Brake pedal depressed: ON
Brake pedal released: OFF

OK → **Proceed to next circuit inspection shown in problem symptom table (See page DI–700).**

NG

2	**Check operation of stop light.**

PREPARATION:

Check if the stop lights come on and go off normally when the brake pedal is depressed and released.

NG → **Check stop light circuit (See page BE–29).**

OK

3	**Connect hand–held tester, and read valve of stop light switch signal**

PREPARATION:

(a) Connect the hand–held tester to the DLC3.
(b) Turn the ignition switch ON and push the hand–held tester main switch ON.
(c) Select the item "DIAGNOSIS/ENHANCED OBD II/DATA LIST/ALL/STOP LIGHT SW".

CHECK:

Read the STP signal on the hand–held tester.

OK:

Brake Pedal	STP Sognal	ST1– Terminal Voltage
Depressed	ON	Below 1.5 V
Released	OFF	7.5 – 14 V

OK → **Check for intermittent problems (See page DI–218).**

NG

4	**Check for harness and connector between ECM and stop light switch (See page IN–28).**

NG → **Repair or replace harness or connector.**

OK

Check and replace ECM (See page IN–28).

OBD II scan tool (excluding hand–held tester):

1	**Check operation of stop light.**

PREPARATION:

Check if the stop lights come on and go off normally when the brake pedal is depressed and released.

NG → **Check stop light circuit (See page BE–29).**

OK

2	Connect hand–held tester, and read valve of stop light switch signal

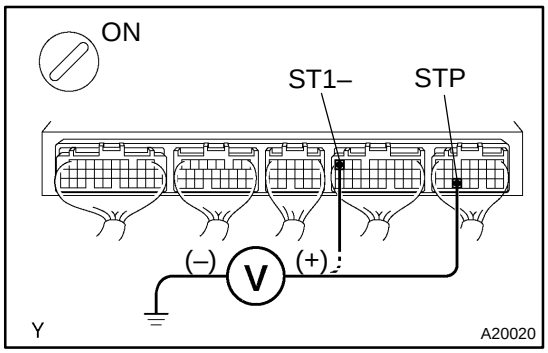

PREPARATION:

(a) Remove the glove compartment.

(b) Turn the ignition switch ON.

CHECK:

Measure the voltage between terminals STP, ST1– of the ECM connector.

OK:

Brake Pedal	STP Terminal Voltage	ST1– Terminal Voltage
Depressed	7.5 – 14 V	Below 1.5 V
Released	Below 1.5 V	7.5 – 14V

OK → **Check for intermittent problems (See page DI–218).**

NG

3	Check for harness and connector between ECM and stop light switch (See page IN–28).

NG → **Repair or replace harness or connector.**

OK

Check and replace ECM (See page IN–28).

DIA7T–02

DTC	P0607/54	Control Module Performance

CIRCUIT DESCRIPTION

See page DI–389.

DTC No.	DTC Detecting Condition	Trouble Area
P0607/54	ECM malfunction	• ECM

WIRING DIAGRAM

See page DI–389.

INSPECTION PROCEDURE

See page DI–389.

DI0YJ–04

CUSTOMER PROBLEM ANALYSIS CHECK

CRUISE CONTROL SYSTEM Check Sheet

Inspector's name: _____

Customer's Name		**Registration No.**	
		Registration Year	
		Frame No.	
Date of Vehicle Brought in	/ /	**Odometer Reading**	**km Mile**

Condition of Problem Occurrence	**Date of Problem Occurrence**	/ /
	How Often does Problem Occur?	☑ Continuous ☑ Intermittent (Times a day)
	Vehicle Speed when Problem Occurred	**km mile**

Symptoms	☑ Auto cancel occurs	● Driving condition ☐ City driving ☐ Freeway ☐ Uphill ☐ Downhill ● After cancel occurred, did the driver activate cruise control again? ☐ Yes ☐ No
	☐ Cancel does not occur	☐ With brake depressed ☐ Except D position shift ☐ At 40 km/h (25 mph) or less ☐ When control SW turns to CANCEL position
	☐ Cruise control malfunction	☐ Slip to acceleration side ☐ Slip to deceleration side ☐ Hunting occurs ☐ O/D cut off does not occur ☐ O/D does not return
	☐ Switch malfunction	☐ + ☐ RES ☐ – ☐ SET ☐ CANCEL
	☐ CRUISE MAIN indicator light	☐ Remains ON ☐ Does not light up ☐ Blinking

DTC Check	**1st Time**	☐ Normal Code ☐ Malfunction Code (Code)
	2nd Time	☐ Normal Code ☐ Malfunction Code (Code)

DI0YN–06

DIAGNOSTIC TROUBLE CODE CHART

If a malfunction code is displayed during the DTC check, check the circuit listed by code in the table below and proceed to the appropriate page.

DTC No. (See page)	Detection Item	Trouble Area
P0500/21 (DI–701)	Vehicle Speed Sensor ”A”	• Combination meter • Open or short in vehicle speed sensor circuit • Vehicle speed sensor • ECM
P0503/23 (DI–701)	Vehicle Speed Sensor ”A” Intermittent/Erratic/High	• Combination meter • Open or short in vehicle speed sensor circuit • Vehicle speed sensor • ECM
P0571/52 (DI–702)	Brake Switch ”A” Circuit	• Short in stop light switch circuit • Stop light switch • ECM
P0607/54 (DI–706)	Control Module Performance	• ECM

CRUISE CONTROL SYSTEM (w/ ETCS–i)

DI663–04

HOW TO PROCEED WITH TROUBLESHOOTING

Troubleshooting in accordance with the procedure on the following pages.

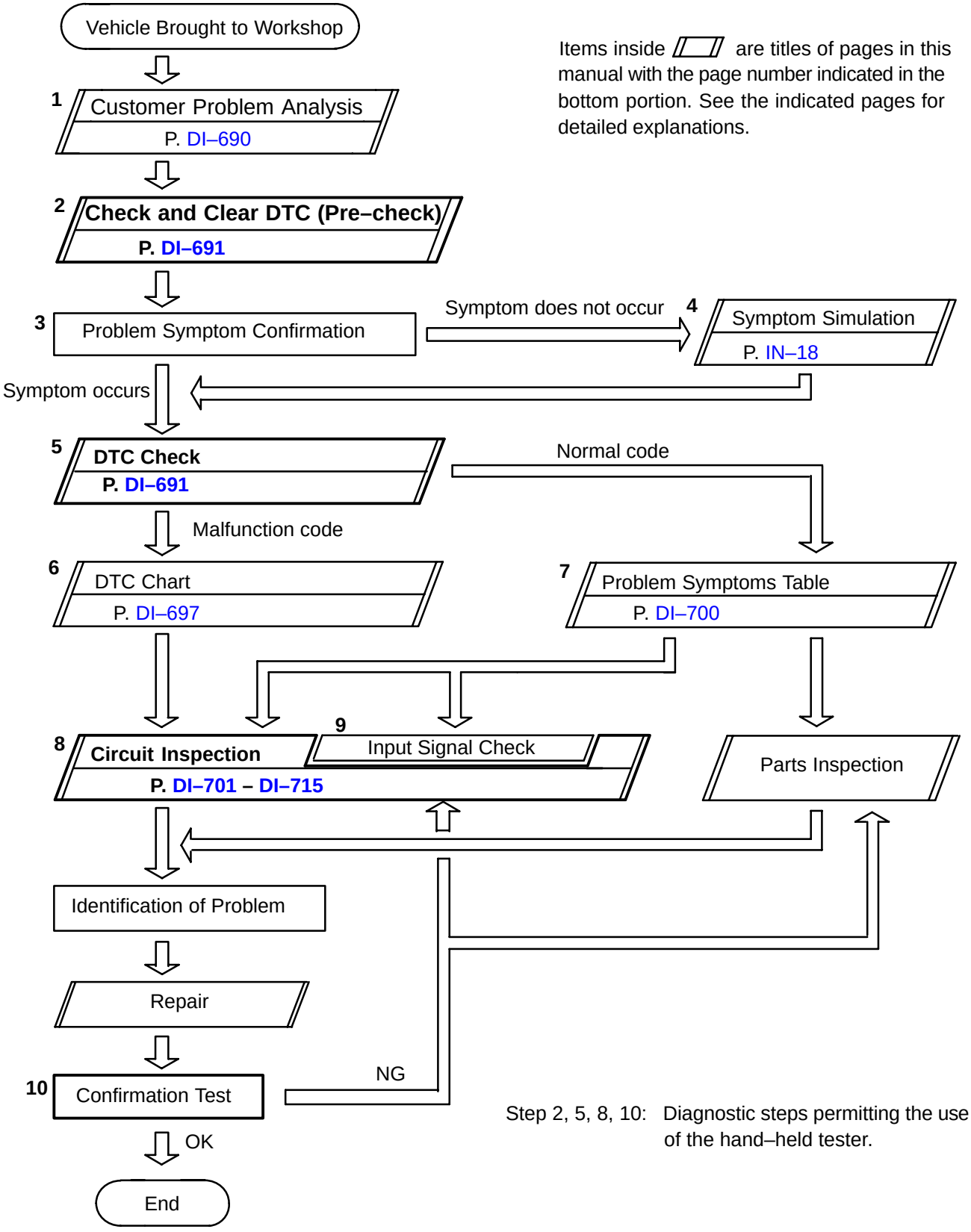

Items inside ▱ are titles of pages in this manual with the page number indicated in the bottom portion. See the indicated pages for detailed explanations.

Step 2, 5, 8, 10: Diagnostic steps permitting the use of the hand–held tester.

DI8ZB–04

PARTS LOCATION

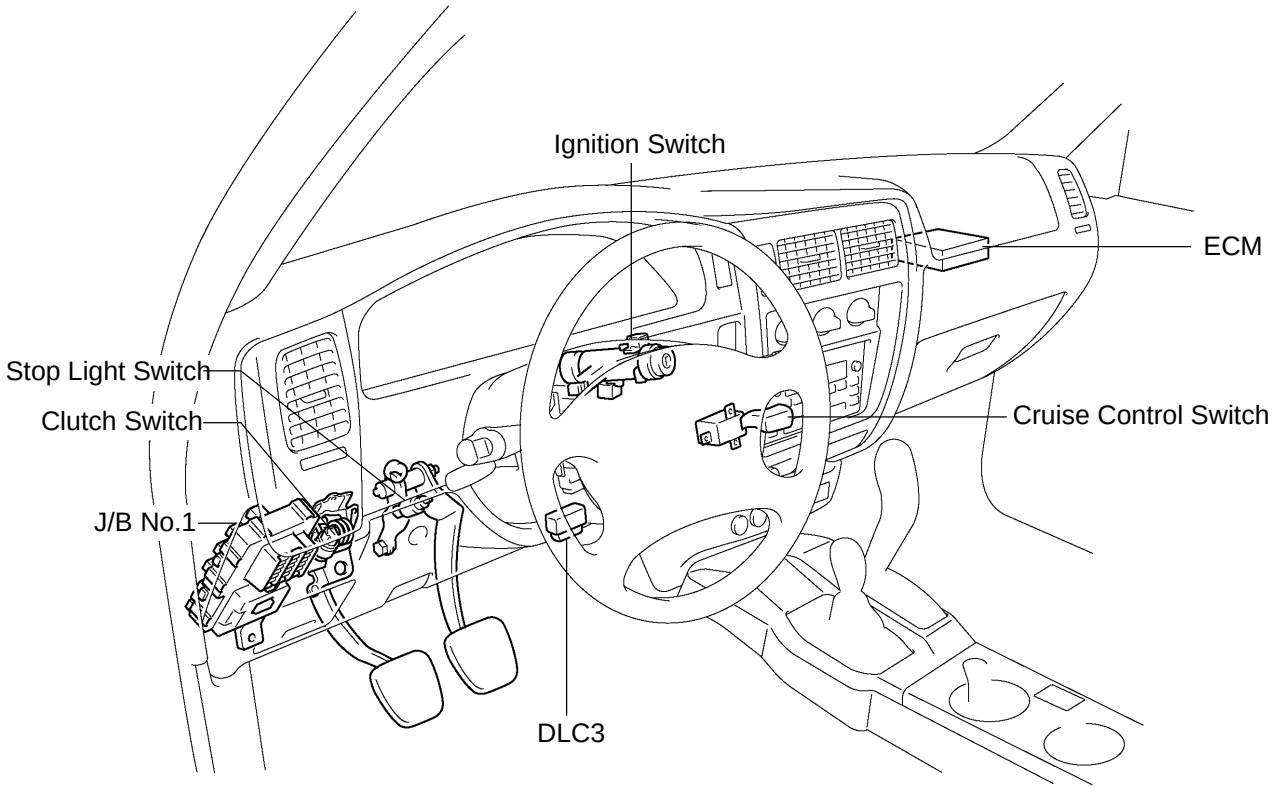

Y

I26003

DIARC–01

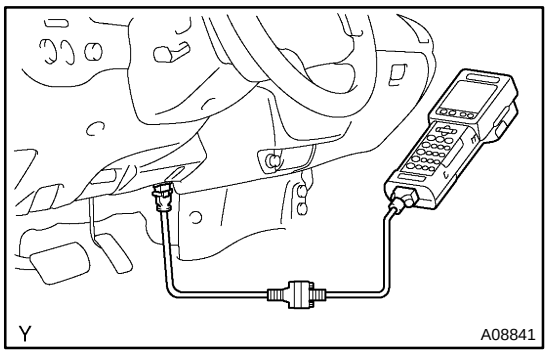

PRE–CHECK

1. DIAGNOSIS SYSTEM

(a) Description

The ECM controls the cruise control function on this vehicle. Data of the cruise control or DTC can be read from the DLC3 of the vehicle. When cruise control function has a trouble, check CRUISE MAIN indicator does not light up but DTC inspection is performed.

Therefore, when the cruise control function seems to have a trouble, use the hand–held tester or SST to check and troubleshoot it.

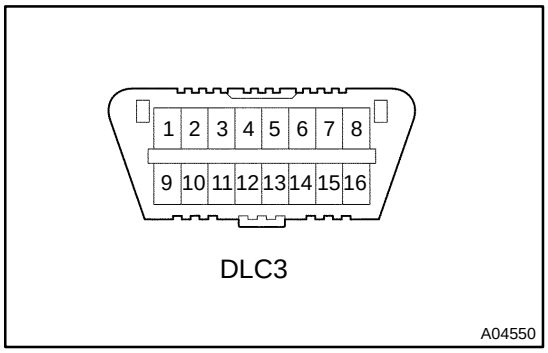

(b) Check the DLC3.

The vehicle's ECM uses the ISO 9141–2 for communication. The terminal arrangement of the DLC3 complies with the SAE J1962 and matches the ISO 9141–2 format.

Terminal No.	Connection/Specified Condition	Condition
7	Bus+ Line/Pulse generation	During transmission
4	Chassis Ground ↔ Body Ground/1 Ω or less	Always
16	Battery Positive ↔ Body Ground/9 – 14 V	Always

HINT:

If the display shows "UNABLE TO CONNECT TO VEHICLE" when you have connected the cable of the hand–held tester to the DLC3, turned the ignition switch ON and operated the hand–held tester, there is a problem on the vehicle side or tool side.

- If the communication is normal when the tool is connected to another vehicle, inspect the DLC3 on the original vehicle.
- If the communication is still impossible when the tool is connected to another vehicle, the problem is probably in the tool itself, so consult the Service Department listed in the tool's instruction manual.

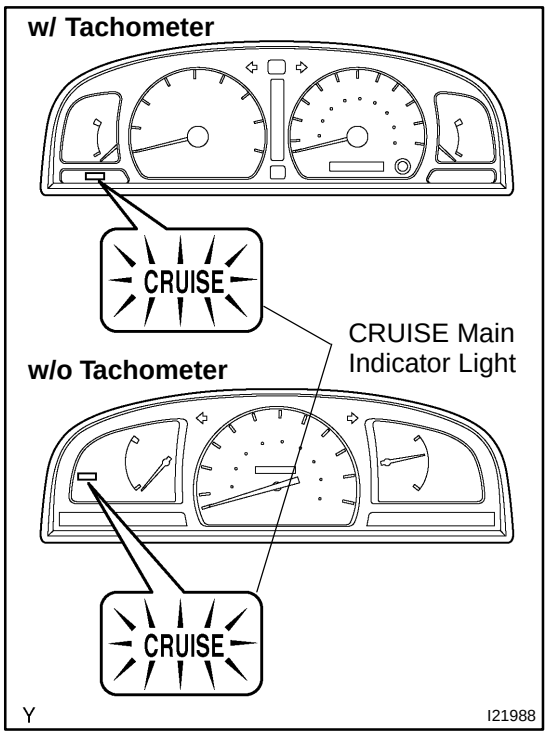

(c) Check the indicator.
(1) Turn the ignition switch ON.
(2) Check that the CRUISE MAIN indicator light comes on when the cruise control main switch is turned ON, and check that the indicator light goes off when the main switch is turned OFF.

HINT:
If the indicator check result is abnormal, proceed to troubleshooting (See page BE–2) of the combination meter section.

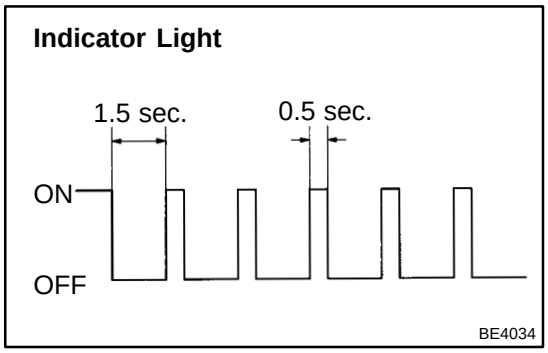

(d) Check the DTC.

HINT:
If a malfunction occurs in the speed sensor or actuator, etc. during cruise control driving, the ECU actuates AUTO CANCEL of the cruise control and turns ON and OFF the CRUISE MAIN indicator light to inform the driver of a malfunction. At the same time, the malfunction is stored in the memory as a DTC.

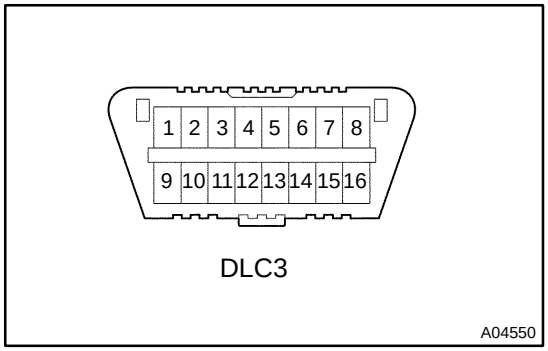

(e) Using diagnosis check wire, check the output of the DTC.
(1) Turn the ignition switch ON.
(2) Using SST, connect terminals Tc and CG of the DLC3.
SST 09843–18020
(3) Read the DTC on the CRUISE MAIN indicator light.

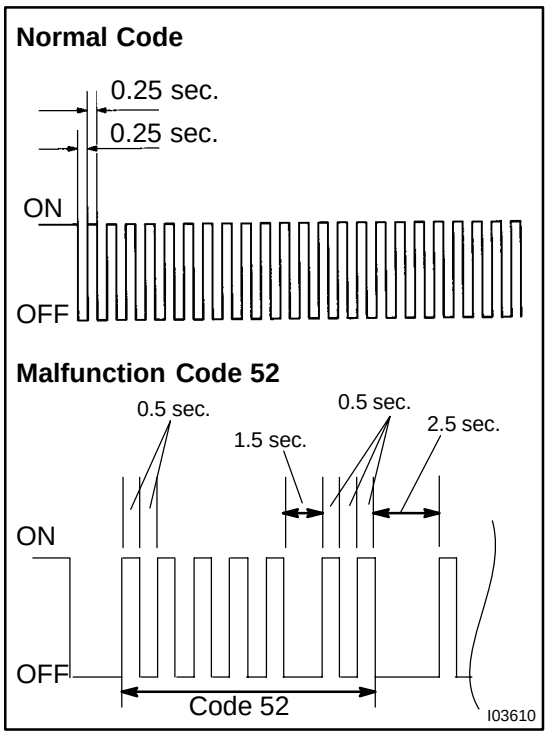

HINT:

- If a DTC is not output, inspect the diagnosis circuit.
- As an example, the blinking patterns of codes; normal and 52 are shown in the illustration.

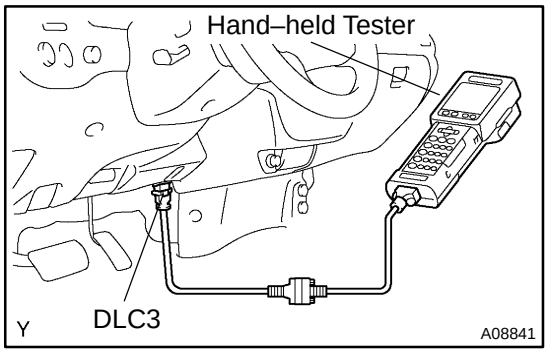

2. MONITOR ECM DATA BY USING HAND–HELD TESTER

(a) Connect the hand–held tester to the DLC3.
(b) Monitor the ECM data by following the prompts on the tester screen.

HINT:

The hand–held tester has a ”Snapshot” function which records the monitored data.

Please refer to the hand–held tester operator’s manual for further details.

3. DATA LIST

HINT:

According to the DATA LIST displayed by the hand–held tester, you can read the value of the switch, sensor, actuator and so on without parts removal. Reading the DATA LIST as a first step of troubleshooting is one of the method to shorten the labor time.

(a) Connect the hand–held to the DLC3.
(b) Turn the ignition switch ON.
(c) According to the display on the tester, read the ”DATA LIST”.

Item	Measurement Item / Display (Range)	Normal Condition	Diagnostic Note
VEHICLE SPD	Vehicle speed / min.: 0 km/h (0 mph), max.: 255 km/h (158 mph)	Actual vehicle speed	–
MEMORY SPD	Cruise control memorized speed / min.: 0 km/h (0 mph), max.: 255 km/h (158 mph)	Memorized speed : Cruise control activated	–

THROTTLE	Required throttle opening angle / min.: 0˚, max.: 125˚	Required throttle opening angle (0˚ – 84˚): Cruise control activated	–
CCS READY S	Cruise control system stand by condition (Sub CPU) / ON or OFF	ON ↔ OFF: Change ON/OFF each time Main SW is pressed in.	”1”
CCS MEMORY M	Cruise control system stand by condition (Main CPU) / ON or OFF	ON ↔ OFF: Change ON/OFF each time Main SW is pressed in.	”1”
CANCEL SW	CANCEL SW signal / ON or OFF	ON: CANCEL SW ON OFF: CANCEL SW OFF	–
SET/COAST SW	SET/COAST SW signal / ON or OFF	ON: SET/COAST SW ON OFF: SET/COAST SW OFF	–
RES/ACC SW	RES/ACC SW signal / ON or OFF	ON: RES/ACC SW ON OFF: RES/ACC SW OFF	–
STP LIGHT SW2 M	Stop light SW signal (Main CPU) /ON or OFF	ON: Brake pedal depressed OFF: Brake pedal released	–
STP LIGHT SW2 S	Stop light SW signal (Sub CPU) /ON or OFF	ON: Brake pedal depressed OFF: Brake pedal released	–
STP LIGHT SW1 S	Stop light SW signal (Sub CPU) /ON or OFF	ON: Brake pedal depressed OFF: Brake pedal released	–
SHIFT D POS	PNP SW signal (D position) / ON or OFF	ON: Shift D position OFF: Expect shift D position	–
CRUISE CTRL	Cruise control system active condition / ON or OFF	ON: Cruise control activated OFF: Cruise control inactivated	–
CCS INDICATOR M	Cruise indicator signal (Main CPU) / ON or OFF	ON: ”CCS READY” ON OFF: ”CCS READY” OFF	”2”
CCS INDICATOR S	Cruise indicator signal (Sub CPU) / ON or OFF	ON: ”CCS READY” ON OFF: ”CCS READY” OFF	”2”
MAIN SW (SUB)	Main SW signal (Sub CPU) / ON or OFF	ON: Main SW ON (Pressed in) OFF: Main SW OFF (Pressed out)	”3”
MAIN SW (MAIN)	Main SW signal (Main CPU) / ON or OFF	ON: Main SW ON (Pressed in) OFF: Main SW OFF (Pressed out)	”3”

HINT:

”3” is OK but ”1” is NG → ECM failure.

”1” is OK but IS NG → DTC output or ECM failure.

”3” is OK but cruise indicator not turn on → Indicator or W/H or ECM failure.

4. DTC CLEARANCE

HINT:

During in the erase mode, DTC detection dose not work.

(a) The following actions will erase DTCs and freeze frame data.
  (1) Hand–Held Tester:
    Operating the hand–held tester to erase codes.
  (2) Except Hand–Held Tester:
    Disconnecting the battery terminals or the EFI fuse for 10 seconds or more.

(b) After completing repairs, the DTC retained in the memory can be cleared by removing the EFI fuse for 10 seconds or more with the ignition switch OFF.

(c) Check that the normal code is displayed after connecting the fuse.

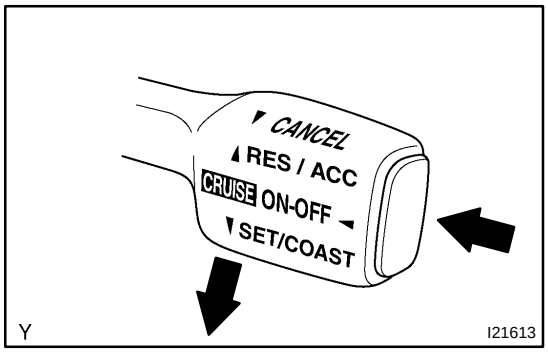

5. PROBLEM SYMPTOM CONFIRMATION (ROAD TEST)

(a) Inspect the SET switch.
(1) Push the main switch ON.
(2) Drive at the see speed (40 km/h (25 mph) or higher).
(3) Press the control switch downward for the SET/ COAST.
(4) Release the switch, and check that the vehicle cruises at the set speed.

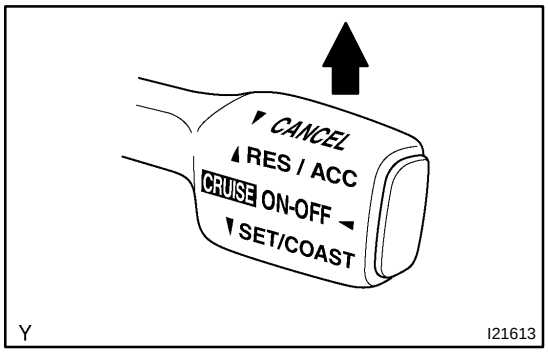

(b) Inspect the ACCEL switch.
(1) Push the main switch ON.
(2) Drive at the see speed (40 km/h (25 mph) or higher).
(3) Check that the vehicle speed increases while the control switch is turned to RES/ACC, and that the vehicle cruises at the set speed when the switch is released.
(4) Momentarily push the control switch upward in the RES/ACC direction and then immediately release it. Check that the vehicle speed increases by about 1.5 km/h (Tap–up function).

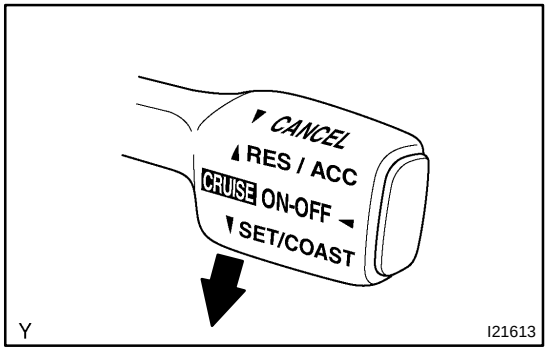

(c) Inspect the COAST switch.
(1) Push the main switch ON.
(2) Drive at the set speed (40 km/h (25 mph) or higher).
(3) Check that the vehicle speed decreases while the control switch is turned to SET/COAST, and the vehicle cruises at the set speed when the switch is released.
(4) Momentarily push the control switch downward for the SET/COAST, and then immediately release it.

Check that the vehicle speed decreases by about 1.5 km/h (Tap–down function).

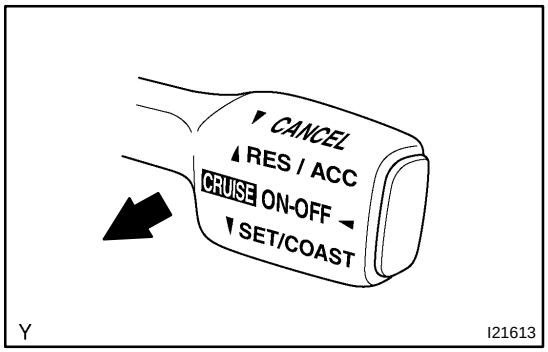

(d) Inspect the CANCEL switch.
(1) Push the main switch ON.
(2) Drive at the set speed (40 km/h (25 mph) or higher).
(3) When operating one of the followings, check that the cruise control system is cancelled and that the normal driving mode is reset.
- Depress the brake pedal.
- M/T:
  Depress the clutch pedal.
- A/T:
  Shift into except D position.
- Push the main switch OFF.
- Pull the cruise control switch for CANCEL.

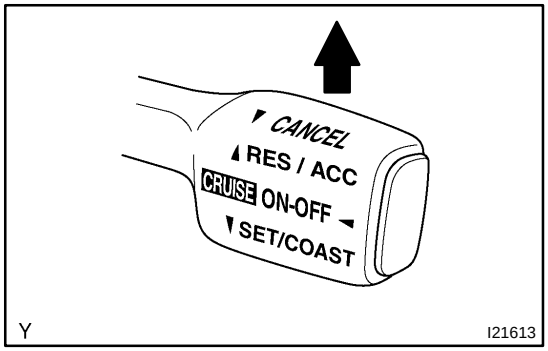

(e) Inspect the RESUME switch.
(1) Push the main switch ON.
(2) Drive at the set speed (40 km/h (25 mph) or higher).
(3) When operating one of the followings, check that the cruise control system is cancelled and that the normal driving mode is reset.
- Depress the brake pedal.
- M/T:
  Depress the clutch pedal.
- A/T:
  Shift into except D position.
- Pull the cruise control switch for CANCEL.

(4) Turn the control switch to RES/ACC at the driving speed of more than 40 km/h (25 mph), and check that the vehicle restores the speed before the cancellation.

DI0YQ–07

PROBLEM SYMPTOMS TABLE

Symptom	Suspect Area	See page
SET does not occur or CANCEL occurs (DTC is Normal)	1. Vehicle Speed Sensor Circuit 2. Stop Light Switch Circuit 3. Park/Neutral Position Switch (A/T), Clutch Switch Circuit (M/T) 4. ECM	DI–701 DI–702 DI–707 DI–710 IN–28
SET does not occur or CANCEL occurs (DTC is not output)	ECM	IN–28
Actual vehicle speed deviates above or below the set speed	1. ECM	IN–28
Gear shifting occurs frequently between 3rd and O/D when driving on uphill road (Hunting)	ECM	IN–28
Cruise control can not be cancelled even when brake pedal is depressed	1. Stop Light Switch Circuit 2. ECM	DI–702 IN–28
Cruise control can not be cancelled even when transmission is shifted to ”N” position	1. Park/Neutral Position Switch (A/T) 2. ECM	DI–707 IN–28
Cruise control can not be cancelled even when clutch pedal is depressed	ECM	IN–28
Control switch does not operate (SET/COAST, RES/ACC, CANCEL not possible)	ECM	IN–28
SET is possible at 40 km/h (25 mph) or less, or CANCEL does not operate at 40 km/h (25 mph) or less	ECM	IN–28
Poor response in ACCEL and RESUME modes	ECM	IN–28
O/D does not resume even though the road is not uphill	ECM	IN–28
DTC memory is erased	ECM	IN–28
DTC is not output, or is output when should not be	1. Diagnosis Circuit 2. ECM	– IN–28
”CRUISE MAIN” indicator light remains ON or fails to light up	ECM	IN–28
”CRUISE MAIN” indicator does not light up	CRUISE MAIN Indicator Light Circuit	DI–713

DI665–04

TERMINALS OF ECU

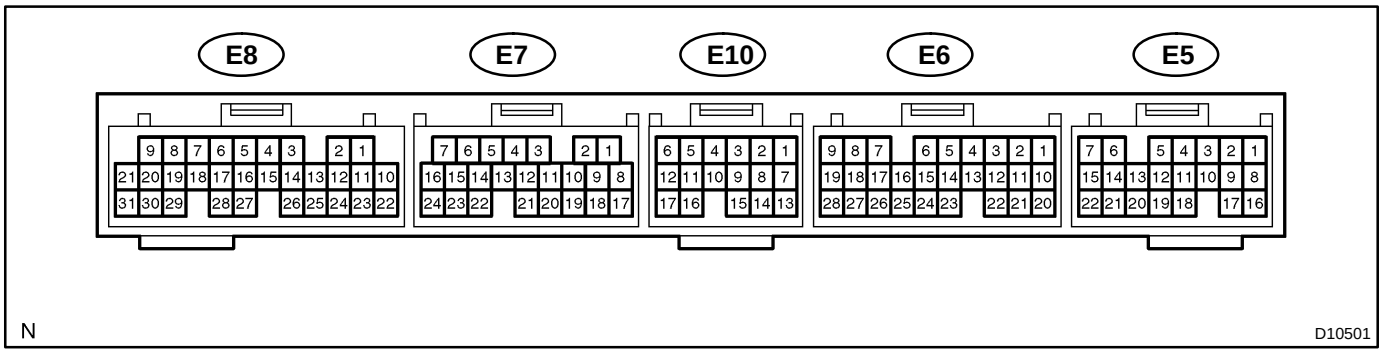

Symbols (Terminals No.)	Wiring Color	Condition	STD Voltage (V)
STP (E5–20) ↔ E1 (E7–17)	G–W ↔ BR	Brake pedal is depressed	7.5 – 14 V
		Brake pedal is released	0 – 1.5 V
CCS (E6–22) ↔ E1 (E7–17)	G–Y ↔ BR	Ignition switch ON	9.0 – 14 V
		Ignition switch ON CANCEL switch held ON	6.0 – 10.1 V
		Ignition switch ON SET/COAST switch held ON	4.0 – 7.1 V
		Ignition switch ON RES/ACC switch held ON	2.1 – 4.0 V
		Ignition switch ON Main switch held ON	Below 1 V
PI (E5–17) ↔ E1 (E7–17)	L–O ↔ BR	Ignition switch ON Cruise control main switch ON	0 – 3.0 V
		Ignition switch ON Cruise control main switch OFF	9 – 14 V
ST1– (E6–9) ↔ E1 (E7–17)	L–W ↔ BR	Brake pedal is depressed	0 – 1.5 V
		Brake pedal is released	7.5 – 14 V
D (E6–25) ↔ E1 (E7–17)	B–W ↔ BR	Ignition switch ON A/T models: Shifting into D range M/T modes: Clutch pedal is released	9 – 14 V
		Ignition switch ON A/T models: Shifting into any positions except D range M/T modes: Clutch pedal is depressed	0 – 1.5 V

DI8ZF–03

DTC	12	Actuator Magnetic Clutch Circuit

CIRCUIT DESCRIPTION

This circuit turns on the magnetic clutch inside the actuator during cruise control operation, according to the signal from the ECU. If a malfunction has occured in the actuator or speed sensor, etc. during cruise control operation, the rotor shaft between the motor and control plate is released.
When the brake pedal is depressed, the stop light switch turns on, supplying electrical power to the stop light. Power supply to the magnetic clutch is mechanically cut and the magnetic clutch is turned off.
When driving downhill, if the vehicle speed has exceeded the set speed by 8 km/h (5 mph), the ECU turns the safety magnet clutch off. If the vehicle speed later drops to within 5 km/h (3 mph), cruise control at the set speed is resumed.

DTC No.	DTC Detection Condition	Trouble Area
12	• Short in actuator magnetic clutch circuit • Open (0.8 sec.) in actuator magnetic clutch circuit	• STOP Fuse • Stop light switch • Actuator magnetic clutch • Harness or connector between cruise control ECU and actuator magnetic clutch, and actuator magnetic clutch and body ground • Cruise control ECU

WIRING DIAGRAM

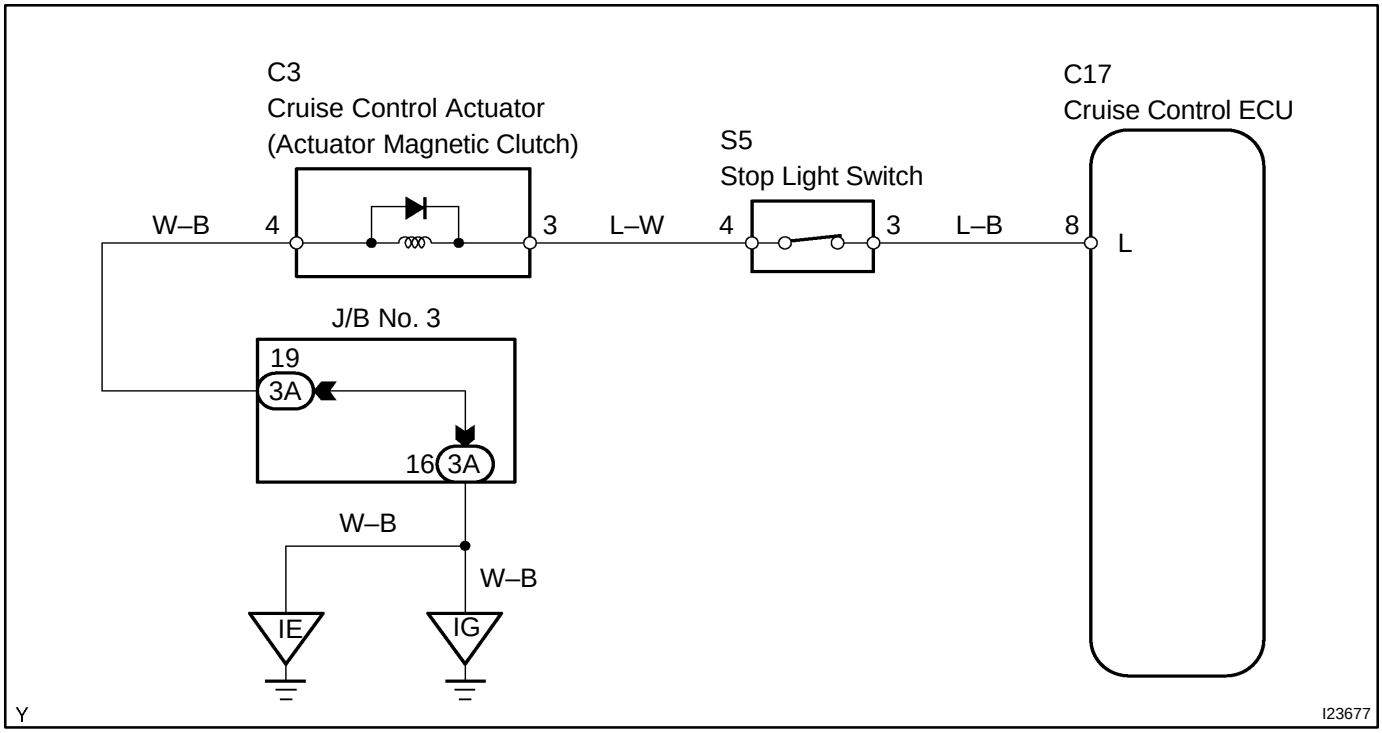

INSPECTION PROCEDURE

1	Check STOP fuse.

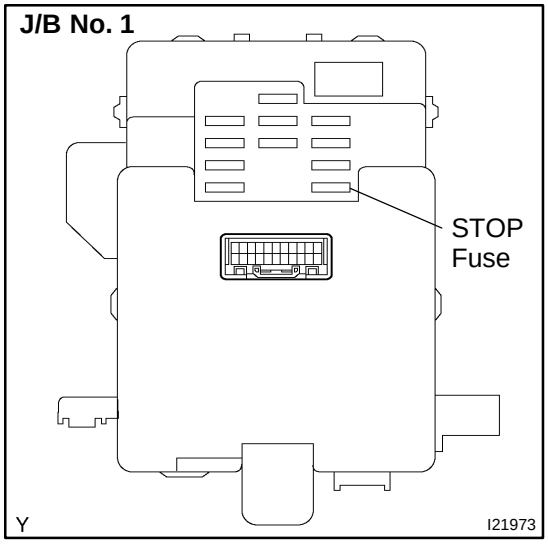

PREPARATION:
(a) Turn the ignition switch OFF.
(b) Remove the STOP fuse from the J/B No. 1.
CHECK:
Check the fuse continuity.
OK:
There is continuity.

NG → **Replace STOP fuse.**

OK

2	Check stop light switch.

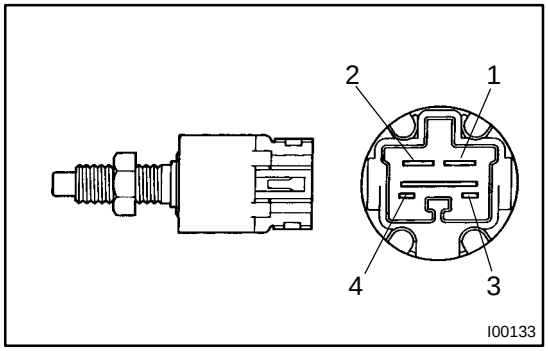

PREPARATION:
Disconnect the stop light switch connector.
CHECK:
Check the continuity between the terminals.

Switch Position	Continuity
Switch pin free (Brake pedal depressed)	1 – 2
Switch pin pushed in (Brake pedal released)	3 – 4

NG → **Replace stop light switch.**

OK

3	**Check resistance between terminals 3 and 4 of actuator magnetic clutch.**

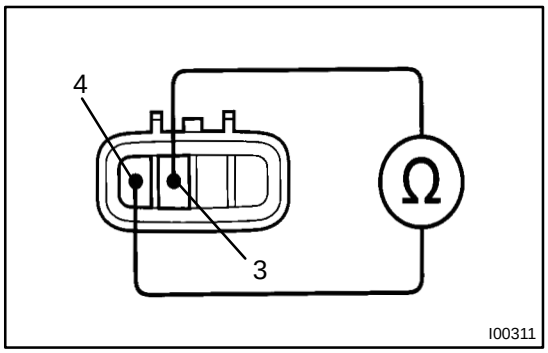

PREPARATION:

(a) Turn the ignition switch OFF.

(b) Disconnect the actuator connector.

CHECK:

Measure the resistance between terminals 3 and 4.

OK:

Resistance: 34.65 – 42.35 Ω.

NG → **Replace cruise control actuator.**

OK

4	**Check for open and short in harness and connector between cruise control ECU and actuator magnetic clutch, and actuator magnetic clutch and body ground (See page IN–28).**

NG → **Repair or replace harness or connector.**

OK

Check and replace cruise control ECU.

DI8ZG–03

DTC	14	Actuator Mechanical Malfunction

CIRCUIT DESCRIPTION

The circuit detects a rotation position of the actuator control plate and sends a signal to the ECU.

DTC No.	DTC Detection Condition	Trouble Area
14	Cruise control actuator mechanical malfunction	• Actuator motor (actuator lock: motor, arm) • Cruise control ECU

WIRING DIAGRAM

See page DI–733.

INSPECTION PROCEDURE

1	Check cruise control actuator arm locking operation

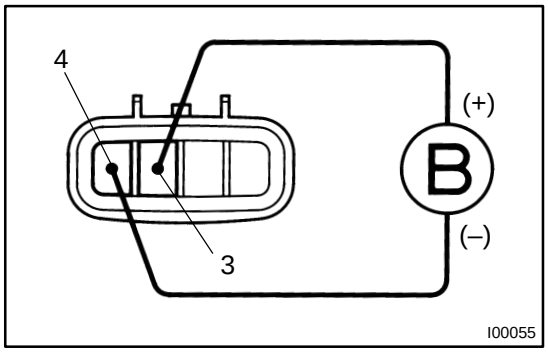

PREPARATION:

(a) Turn the ignition switch OFF.

(b) Disconnect the actuator connector.

CHECK:

(a) Connect the positive (+) lead from the battery to terminal 3 of the actuator and the negative (–) lead to terminal 4.

NOTICE:

Do not connect high tension cables to a wrong battery terminal. The cruise control actuator will be damaged.

(b) Move the control plate by hand.

OK:

Control plate does not move.

NG → **Replace cruise control actuator.**

OK

2	Check cruise control actuator operation.

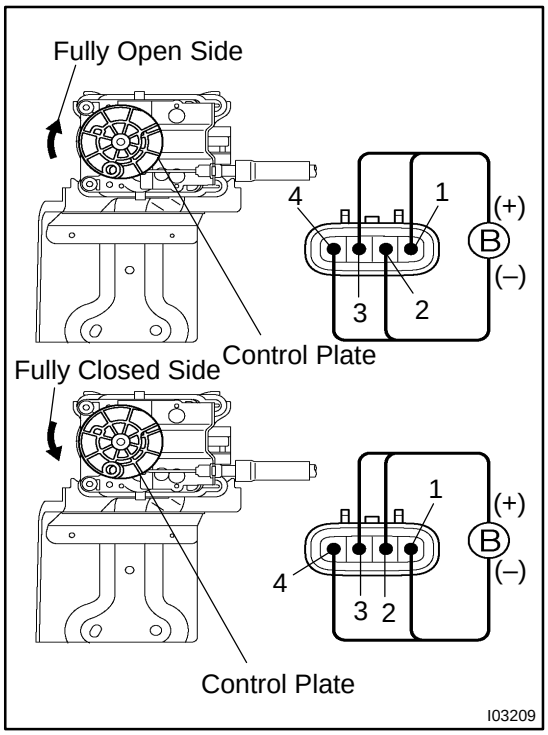

PREPARATION:

(a) Turn the ignition switch OFF.

(b) Disconnect the actuator connector.

CHECK:

Connect the positive (+) lead from the battery to terminals 1 and 3 of the actuator, and the negative (–) lead to terminals 2 and 4.

OK:

Control arm moves to fully opened side

CHECK:

Connect the positive (+) lead from the battery to terminals 2 and 3 of the actuator, and the negative (–) lead to terminals 1 and 4.

OK:

Control arm moves to fully colsed side

NG → **Replace cruise control actuator.**

OK

3	Check harness and connector between cruise control ECU and cruise control actuator (See page IN–28).

NG → **Repair or replace harness or connector.**

OK

Check and replace cruise control ECU.

DI8ZH–04

DTC	21	Open in Vehicle Speed Sensor Circuit

CIRCUIT DESCRIPTION

Vehicle speed sensor circuit sends a signal to the cruise control ECU as a vehicle speed signal.
The rotor shaft is driven by the gear of the transmission.
For each rotation of the shaft, the vehicle speed sensor sends a 4–pulse signal through the combination meter to the cruise control ECU (See the following illustration).
This signal is converted inside the combination meter and sent as a 4–pulse signal to the cruise control ECU.
The ECU calculates the vehicle speed from this pulse frequency.

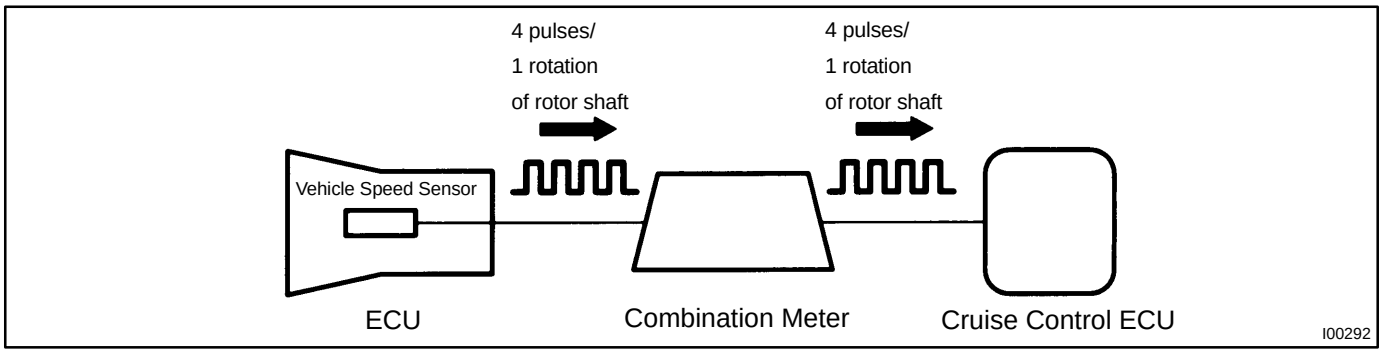

DTC No.	DTC Detection Condition	Trouble Area
21	Speed signal is not input to the cruise control ECU while cruise control is set	• Combination meter • Harness or connector between cruise control ECU and combination meter, and combination meter and vehicle speed sensor • Vehicle speed sensor • Cruise control ECU

WIRING DIAGRAM

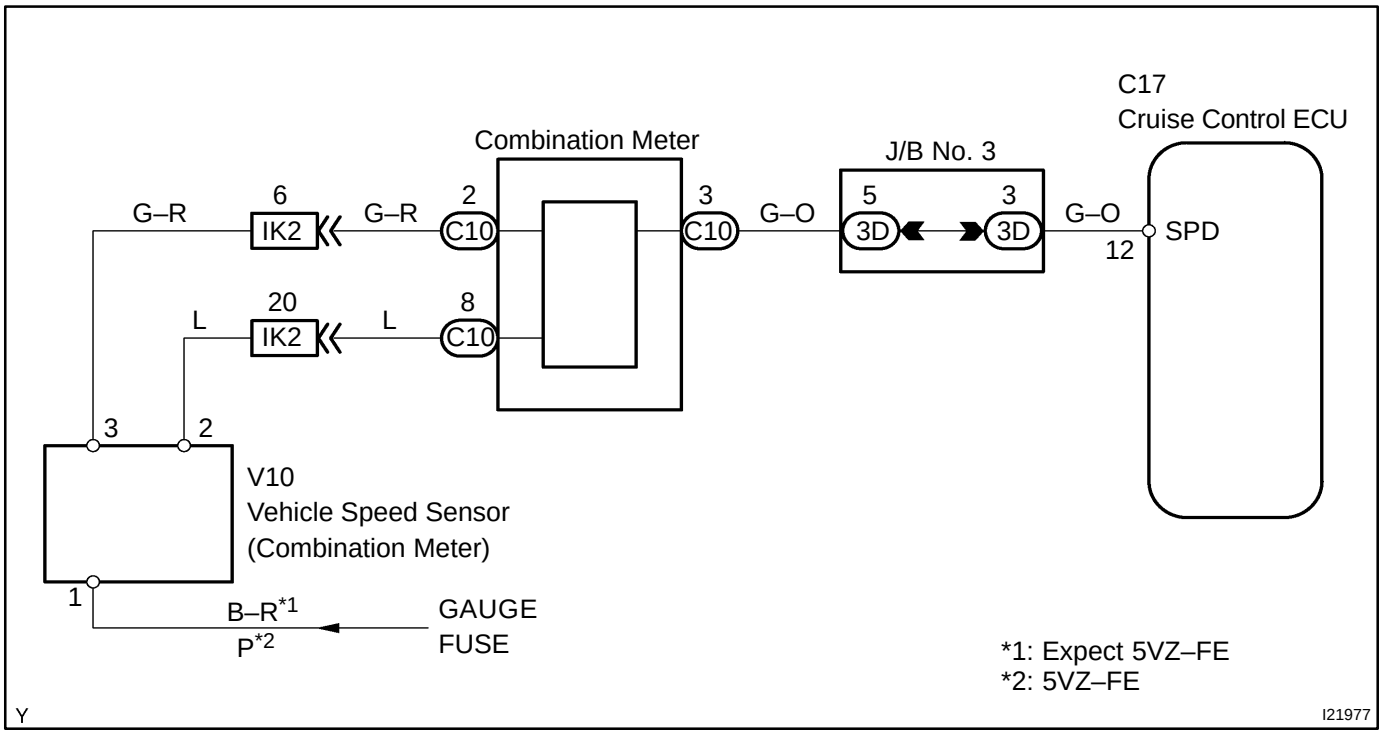

INSPECTION PROCEDURE

1	**Input signal check.**

Input Signal	Indicator Light Blinking Pattern
Drive at about 40 km/h (25 mph) or below	Light: ON — OFF
Drive at about 40 km/h (25 mph) or higher	Light: ON / OFF 

CHECK:

(a) See the input signal check on page DI–721.

(b) Check the indicator light operation when driving with vehicle speed of above 40 km/h (25 mph), and with vehicle speed of below 40 km/h (25 mph).

OK:

Vehicle speed above 40 km/h (25 mph):
Indicator light blinks

Vehicle speed below 40 km/h (25 mph):
Indicator light stays on

OK → **Check and replace cruise control ECU (See page IN–28).**

NG

2	**Check speedometer circuit (See combination meter troubleshooting on page BE–2).**

NG → **Repair or replace harness, connector or combination meter assembly.**

OK

3	**Check harness and connector between cruise control ECU and combination meter, and combination meter and vehicle speed sensor (See page IN–28).**

NG → **Repair or replace harness or connector.**

OK

4	Check vehicle speed sensor (See page BE–39).

NG → Replace vehicle speed sensor.

OK →

Check and replace cruise control ECU (See page IN–28).

DI8ZI–02

DTC	23	Vehicle Speed Signal Abnormal

CIRCUIT DESCRIPTION

See page DI–738.

DTC No.	DTC Detection Condition	Trouble Area
23	Vehicle speed sensor pulse is abnormal	• Vehicle speed sensor • Cruise control ECU

WIRING DIAGRAM

See page DI–738.

INSPECTION PROCEDURE

1	**Check vehicle speed sensor (See page BE–39).**

NG → **Replace vehicle speed sensor.**

OK

Check and replace cruise control ECU (See page IN–28).

DI8ZJ–04

DTC	51	Idle Signal Circuit

CIRCUIT DESCRIPTION

When the idle switch is turned on, a signal is sent to the ECU. The ECU uses this signal to correct a discrepancy between the throttle valve position and the actuator position sensor values, and it enables accurate cruise control at the set speed. If the idle switch malfunctions, problem symptoms occur also in the engine, so inspect the engine then.

DTC No.	DTC Detection Condition	Trouble Area
51	Short in idle signal circuit	• Harness or connector between ECM and throttle position sensor • Throttle position sensor • Harness or connector between cruise control ECU and ECM • Cruise control ECU

WIRING DIAGRAM

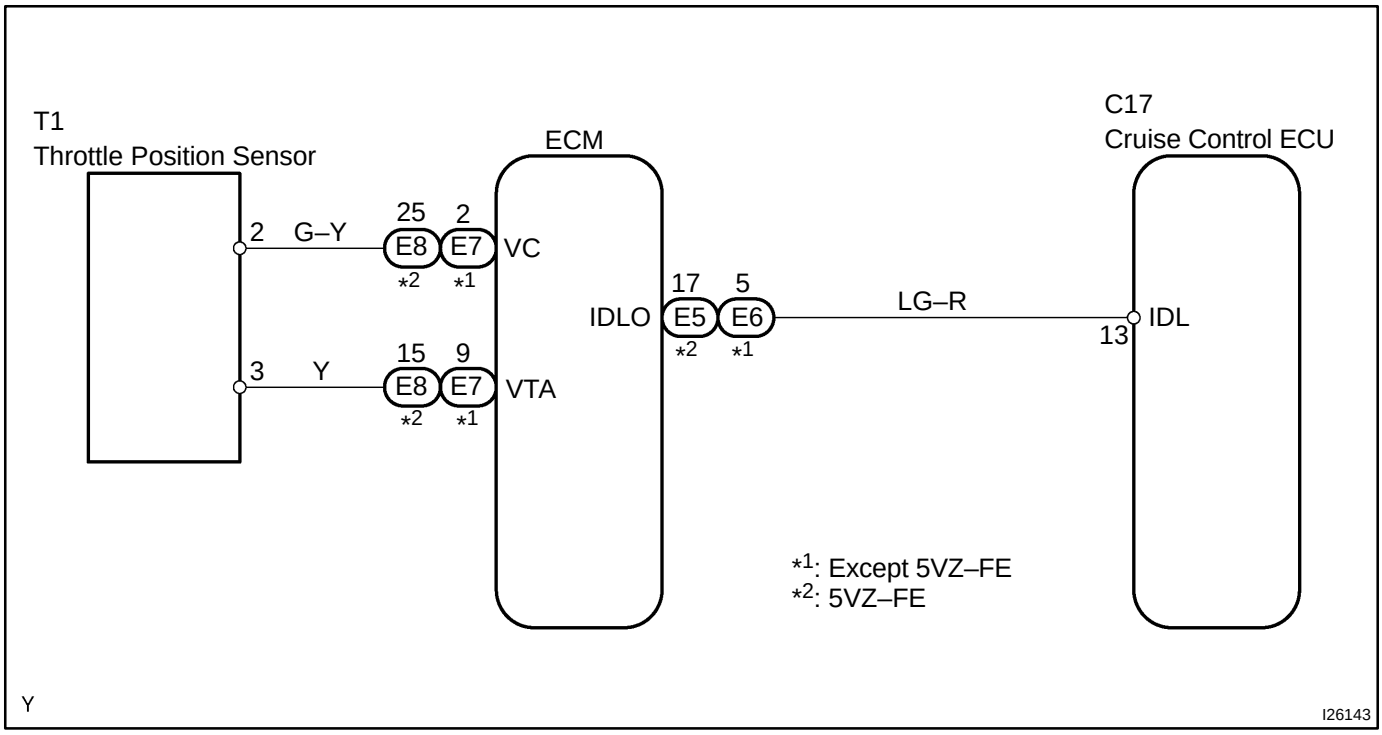

INSPECTION PROCEDURE

1	**Check voltage between terminal IDL of cruise control ECU connector and body ground.**

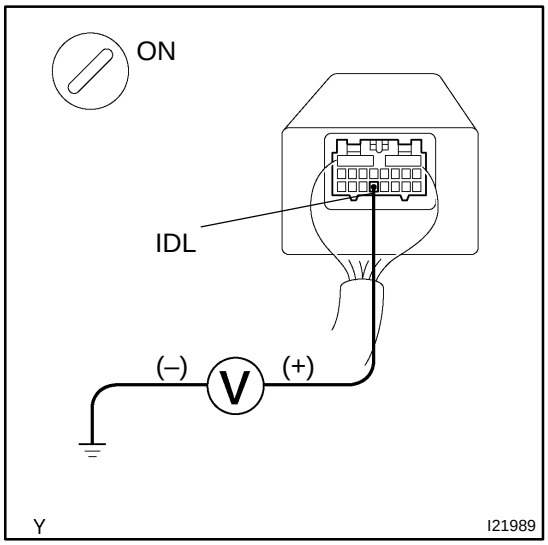

PREPARATION:

(a) Remove the ECU with the connector being connected.
(b) Disconnect the ECM connector.
(c) Turn the ignition switch ON.

CHECK:

Measure the voltage between terminal IDL of the ECU connector and the body ground when the throttle valve is fully closed and fully opened.

OK:

Throttle Valve Position	Voltage
Fully opened	10 – 16 V
Fully closed	Below 1.5 V

OK → **Proceed to next circuit inspection shown in problem symptoms table (See page DI–730).**

NG

2	**Check harness and connector between ECM and throttle position sensor (See page IN–28).**

NG → **Repair or replace harness or connector.**

OK

3	**Check throttle position sensor circuit (See page DI–272).**

NG → **Replace throttle position sensor.**

OK

4	**Check throttle position sensor.**

NG → **Replace throttle position sensor.**

OK

5	**Check for open and short in harness and connector between cruise control ECU and ECM (See page IN–28).**

NG → **Repair or replace harness or connector.**

OK

Check and replace cruise control ECU.

DI8ZE–03

CIRCUIT INSPECTION

DTC	11, 15	Actuator Motor Circuit

CIRCUIT DESCRIPTION

Actuator motor is operated by signals from the ECU. Acceleration and deceleration signals are transmitted according to changes in the Duty Ratio (See below).

Duty Ratio:

The duty ratio is a ratio of a period of continuity in one cycle. For example, if A is a period of continuity in one cycle, and B is a period of non–continuity.

$$\text{Duty Ratio} = \frac{A}{A + B} \times 100\ (\%)$$

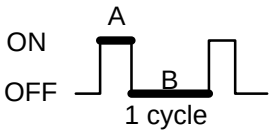

DTC No.	DTC Detection Condition	Trouble Area
11	Short in actuator motor circuit	• Actuator motor • Harness or connector between cruise control ECU and actuator motor • Cruise control ECU
15	Open in actuator motor circuit	• Actuator motor

WIRING DIAGRAM

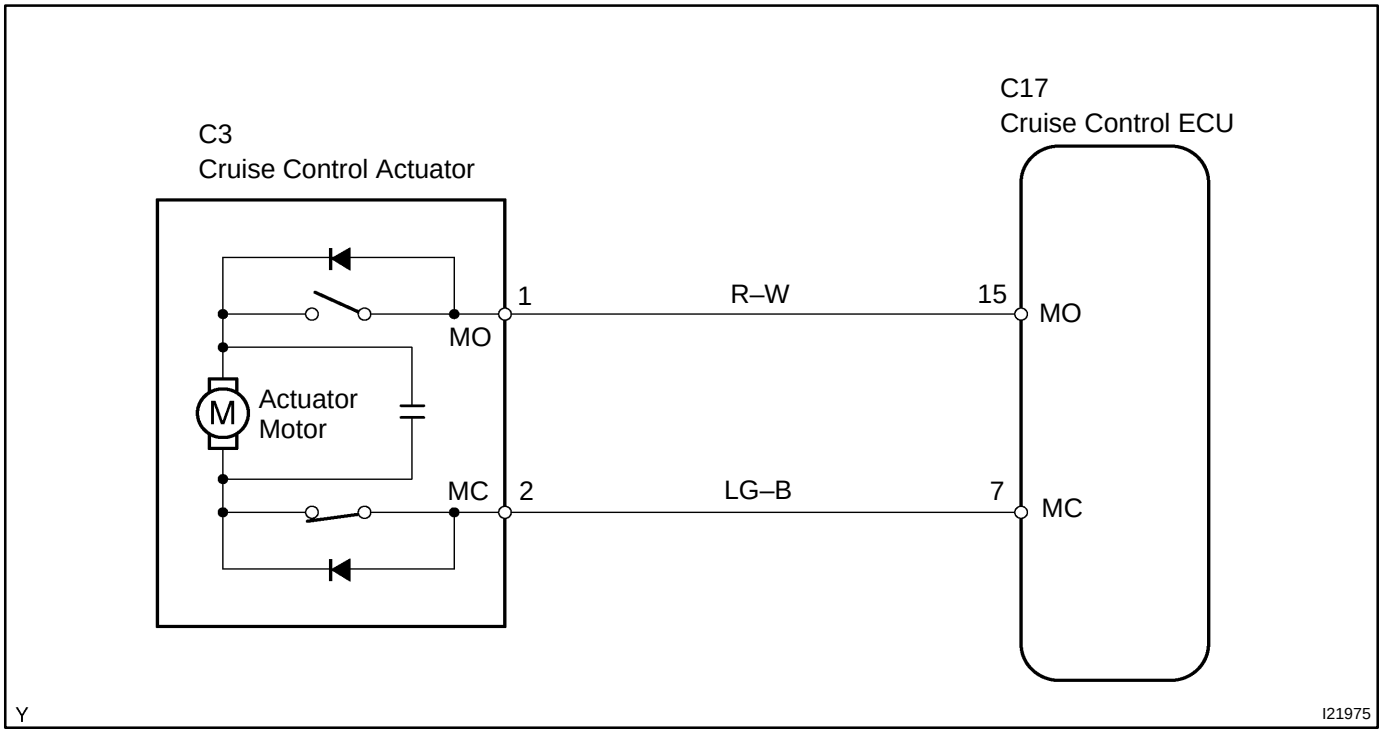

INSPECTION PROCEDURE

1	**Check resistance between terminals 1 and 2 of actuator motor.**

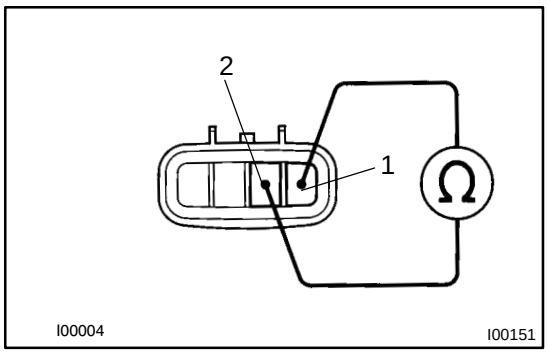

PREPARATION:

(a) Turn the ignition switch OFF.

(b) Disconnect the actuator connector.

CHECK:

Measure the resistance between terminals 1 and 2.

HINT:

If the control plate is in the fully opened or fully closed position, the resistance can not be measured.

OK:

Resistance: More than 4.2 Ω

NG → **Replace cruise control actuator.**

OK

2	**Check for open and short in harness and connector between cruise control ECU and actuator motor (See page IN–28).**

NG → **Repair or replace harness or connector.**

OK

Check and replace cruise control ECU.

DI8ZR–01

Actuator Control Cable

INSPECTION PROCEDURE

1	**Inspect actuator control cable.**

CHECK:

(a) Check that the actuator and control cable throttle link are properly installed and that the cable and link are connected correctly.

(b) Check that the actuator and bell crank operate smoothly.

(c) Check that the cable is not loose or not too tight.

OK:

Freeplay: Less than 10 mm (0.39 in.)

HINT:

- If the control cable is very loose, the vehicle's loss of speed will be large while going uphill.
- If the control cable is too tight, the idle RPM will become high.

DI8ZO–03

ECU Power Source Circuit

CIRCUIT DESCRIPTION

The ECU power source supplies power to the actuator and sensors, etc., when terminal GND and the cruise control ECU case are grounded.

WIRING DIAGRAM

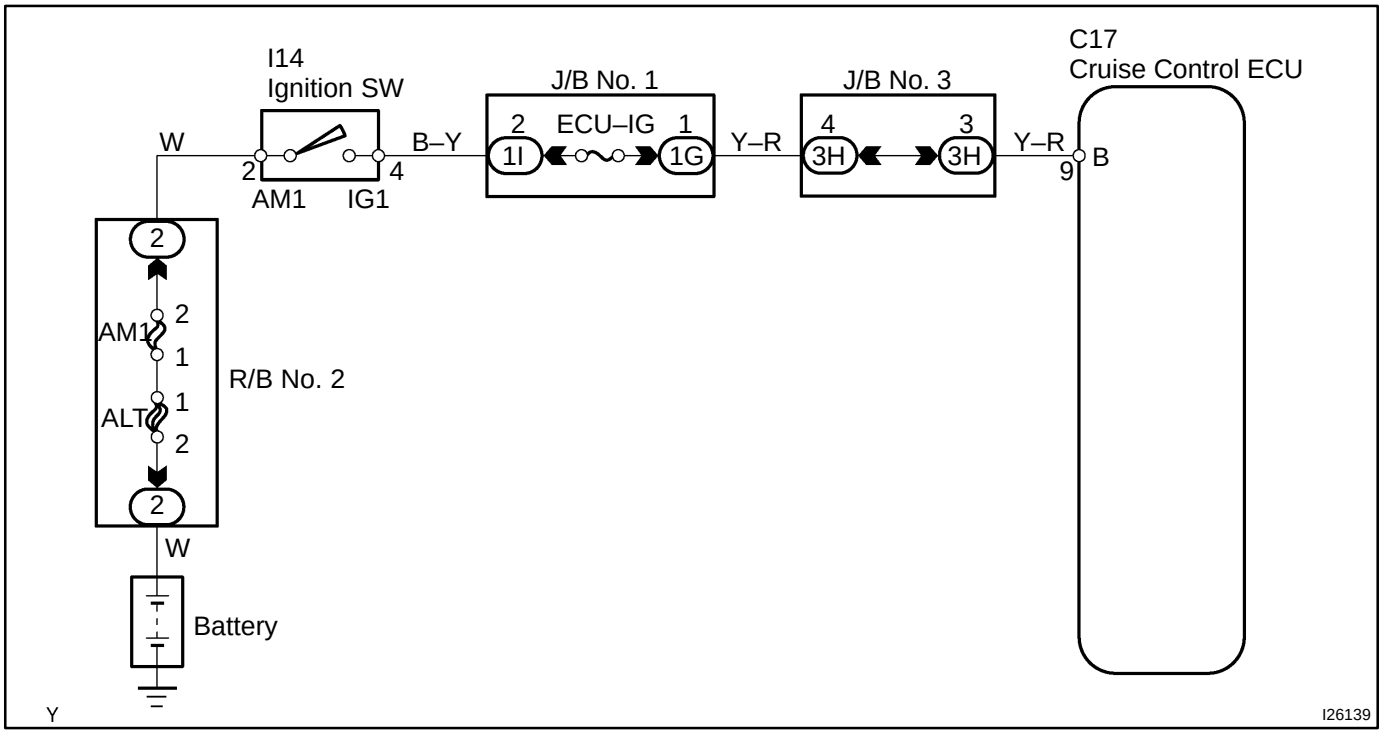

INSPECTION PROCEDURE

1	Check ECU–IG fuse.

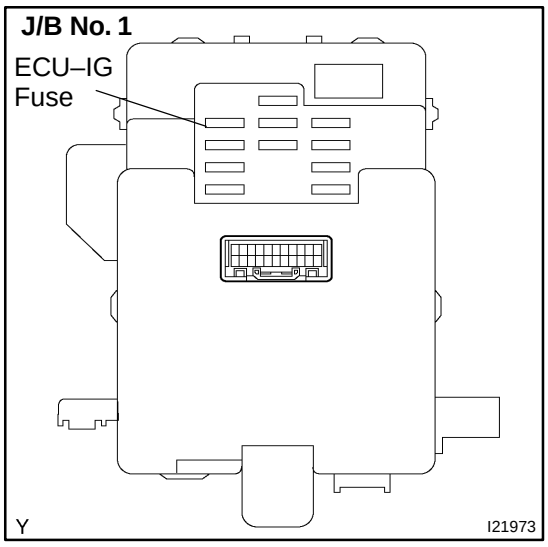

PREPARATION:
Remove the ECU–IG fuse from the J/B No. 1.
CHECK:
Check the continuity of the ECU–IG fuse.
OK:
Continuity

NG → **Replace ECU–IG fuse.**

OK

2	Check voltage between terminals B and GND of cruise control ECU connector.

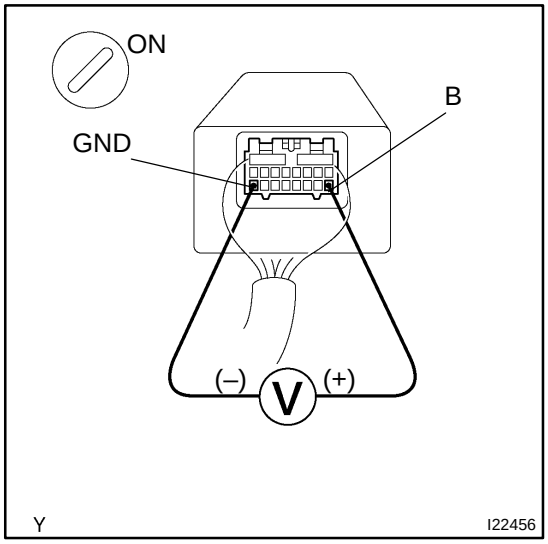

PREPARATION:
(a) Remove the ECU with the connector being connected.
(b) Turn the ignition switch ON.
CHECK:
Measure the voltage between terminals B and GND of the ECU connector.
OK:
10 – 16 V

OK → **Proceed to next circuit inspection shown in problem symptoms table (See page DI–730).**

NG

3	**Check resistance between terminal GND of cruise control ECU connector and body ground.**

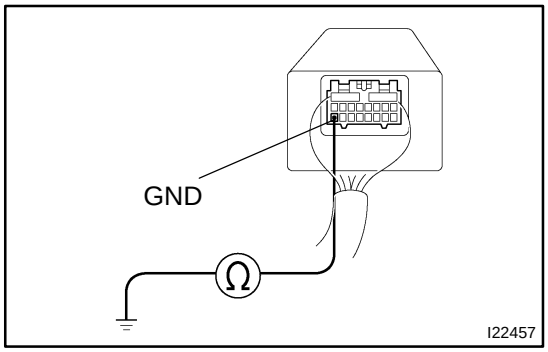

CHECK:

Measure the resistance between terminal GND of the ECU connector and the body ground.

OK:

Resistance: Below 1 Ω

NG → **Repair or replace harness or connector.**

OK

Check and repair harness and connector between cruise control ECU and battery (See page DI–730).

DI8ZM–05

Park/Neutral Position Switch Circuit (A/T)

CIRCUIT DESCRIPTION

When the shift position is except D, a signal is sent from the park/neutral position switch to the ECU. When this signal is input during the cruise control driving, the ECU cancels the cruise control.

WIRING DIAGRAM

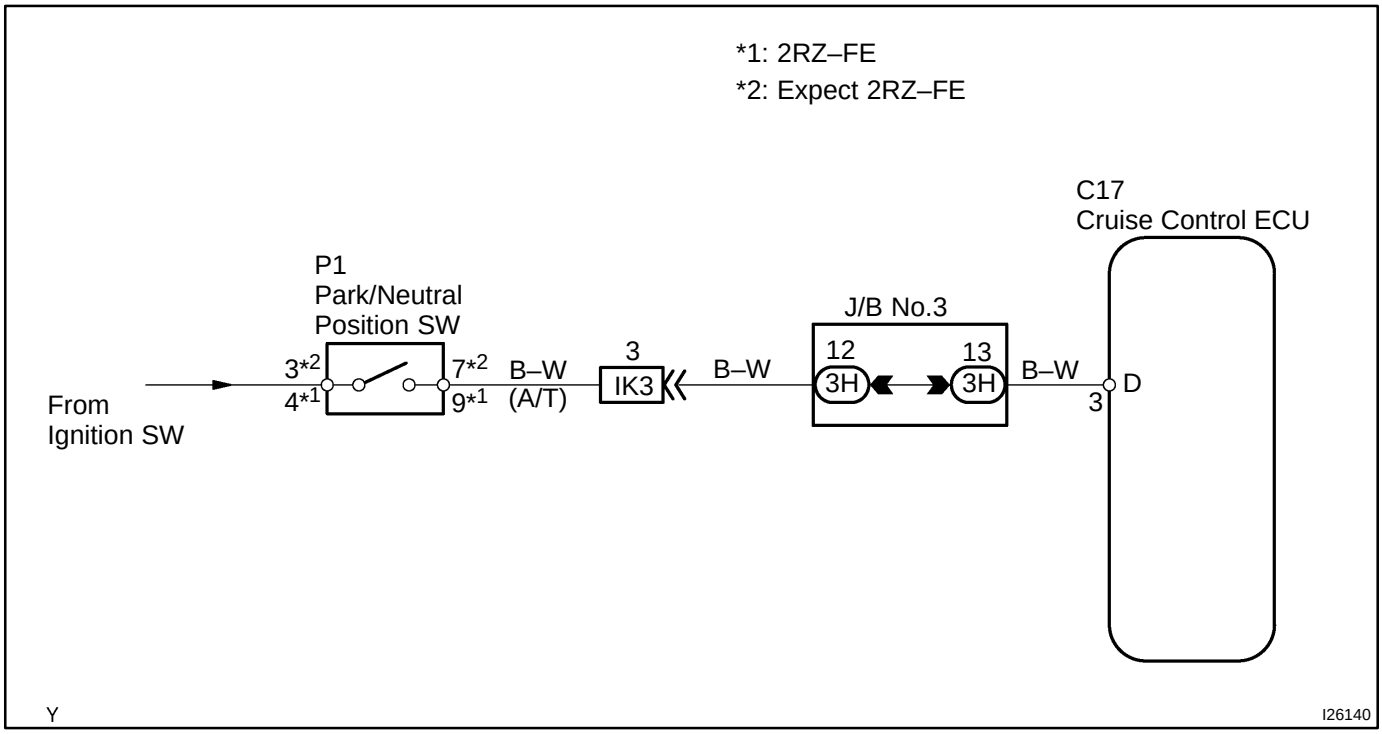

INSPECTION PROCEDURE

1	**Check starter operation.**

CHECK:

Check that the starter operates normally and that the engine starts.

NG → **Proceed to engine troubleshooting.**

OK

2	Input signal check.

Input Signal	Indicator Light Blinking Pattern
Turn PNP Switch OFF (Shift to positions except D)	Light: ON (SW ON), OFF (SW OFF)

PREPARATION:

See the input signal check on page DI–721.

CHECK:

Check the indicator light when shifting into positions except D.

OK:

The indicator light goes off when shifting into positions except D.

OK → **Proceed to next circuit inspection shown in problem symptoms table (See page DI–730).**

NG

3	Check voltage between terminal D of cruise control ECU connector and body ground.

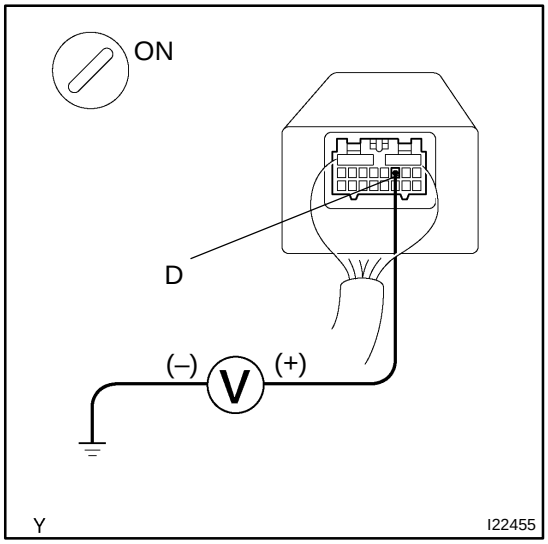

PREPARATION:

Turn the ignition switch ON.

CHECK:

Measure the voltage between terminal D of the ECU connector and the body ground when shifting into the D position and other positions.

OK:

Shift Position	Voltage
D position	10 – 16 V
Other positions	Below 1 V

OK → **Proceed to next circuit inspection shown in problem symptoms table (See page DI–730).**

NG

4	**Check harness and connector between cruise control ECU and park/neutral position switch (See page IN–28).**

NG → **Repair or replace harness or connector.**

OK

Check and replace cruise control ECU (See page IN–28).

DI8ZL–03

Electronically Controlled Transmission Communication Circuit

CIRCUIT DESCRIPTION

When the vehicle is driven uphill under the cruise control, a signal to prevent a upshift until the end of the uphill slope is sent from the cruise control ECU to the electronically controlled transmission, in order to reduce shifting due to ON–OFF overdrive operation and to provide smooth driving when a downshifting in the electronically controlled transmission occurs.
Terminal ECT of the cruise control ECU detects a shift change signal (input to electronically controlled transmission No. 2 solenoid) from the ECM.
When the vehicle speeds down and when terminal ECT of the cruise control ECU receives a downshifting signal, it sends a signal from terminal OD to the ECM to cut overdrive until the end of the uphill slope, and the gear shiftings are reduced and gear shifting points in the electronically controlled transmission are changed.

WIRING DIAGRAM

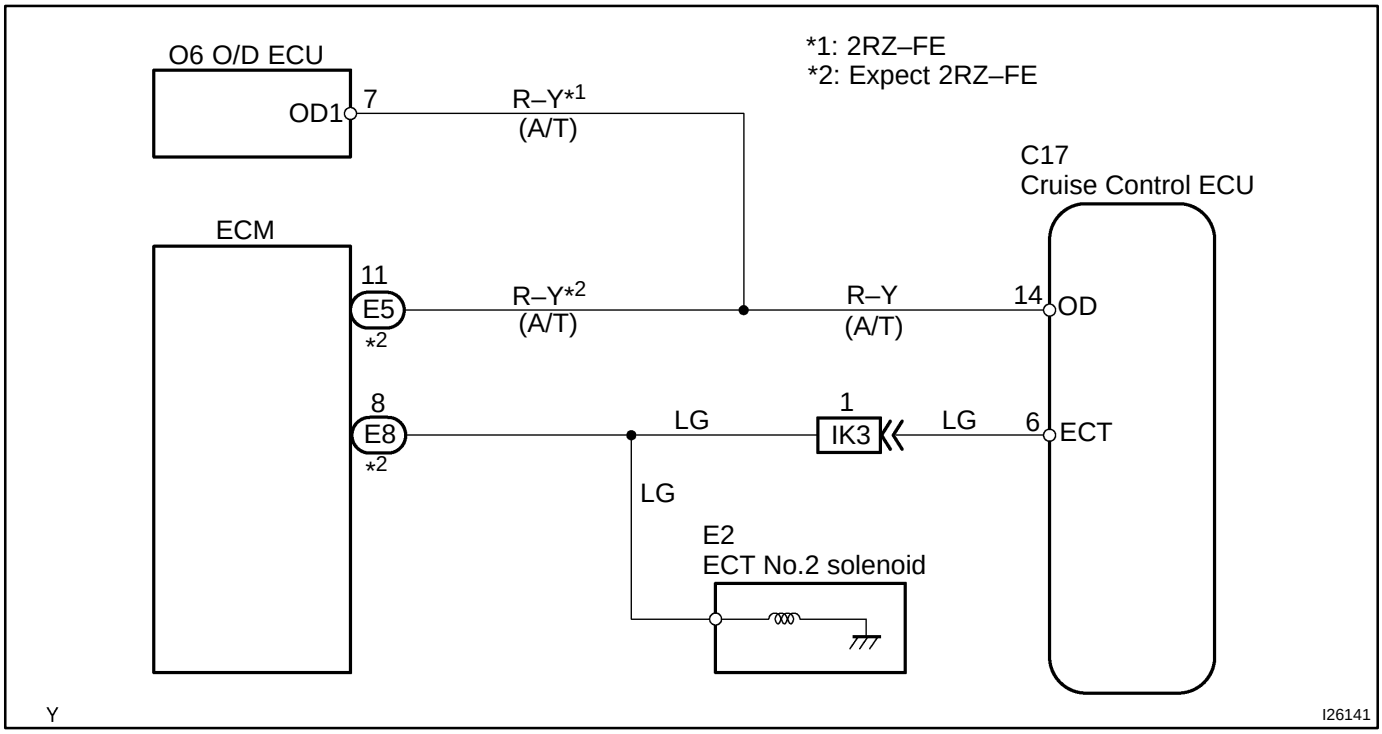

INSPECTION PROCEDURE

1	**Check operation of overdrive.**

PREPARATION:

Drive the vehicle after the engine warmed up.

CHECK:

Check that overdrive ON ↔ OFF occurs by an operation of the OD switch ON–OFF.

NG → **Check and repair electronically controlled transmission (See page DI–454).**

OK

2	**Check voltage between terminal OD of cruise control ECU connector and body ground.**

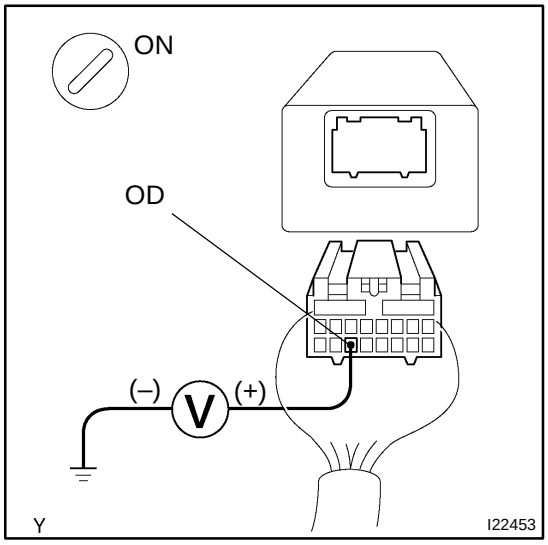

PREPARATION:

(a) Remove the ECU with the connector being connected.
(b) Turn the ignition switch ON.
(c) Disconnect the ECU connector.

CHECK:

Measure the voltage between terminal OD of the ECU connector and the body ground.

OK:

Voltage: 10 – 16 V

NG → **Go to step 5.**

OK

3	Check voltage between terminal ECT of cruise control ECU connector and body ground (On test drive).

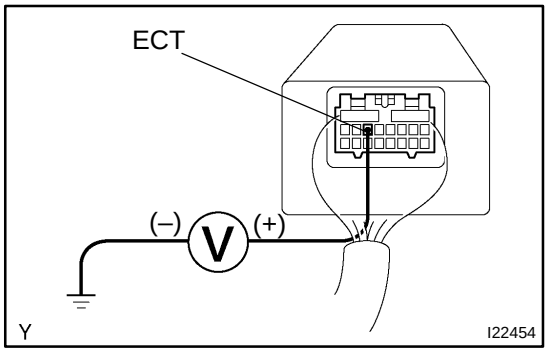

PREPARATION:

(a) Connect the ECU connector.

(b) Drive the vehicle after the engine warmed up.

CHECK:

Check the voltage between terminal ECT of the ECU connector and the body ground when the OD switch is ON and OFF.

OK:

OD Switch Position	Voltage
ON	8 – 16 V
OFF	Below 0.5 V

OK → **Proceed to next circuit inspection shown in problem symptoms table (See page DI–730).**

NG

4	Check harness and connector between terminal ECT of cruise control ECU and electronically controlled transmission solenoid (See page IN–28).

NG → **Repair or replace harness or connector.**

OK

Check and replace cruise control ECU.

5	Check harness and connector between terminal OD of cruise control ECU and terminal OD1 of ECM or terminal OD1 of O/D ECU (See page IN–28).

NG → **Repair or replace harness or connector.**

OK

Check and replace cruise control ECU.

DI8ZN–04

Clutch Switch Circuit (M/T)

CIRCUIT DESCRIPTION

When the clutch pedal is depressed, the clutch switch sends a signal to the cruise control ECU. When the signal is input to the cruise control ECU during cruise control driving, the cruise control ECU cancels the cruise control.

WIRING DIAGRAM

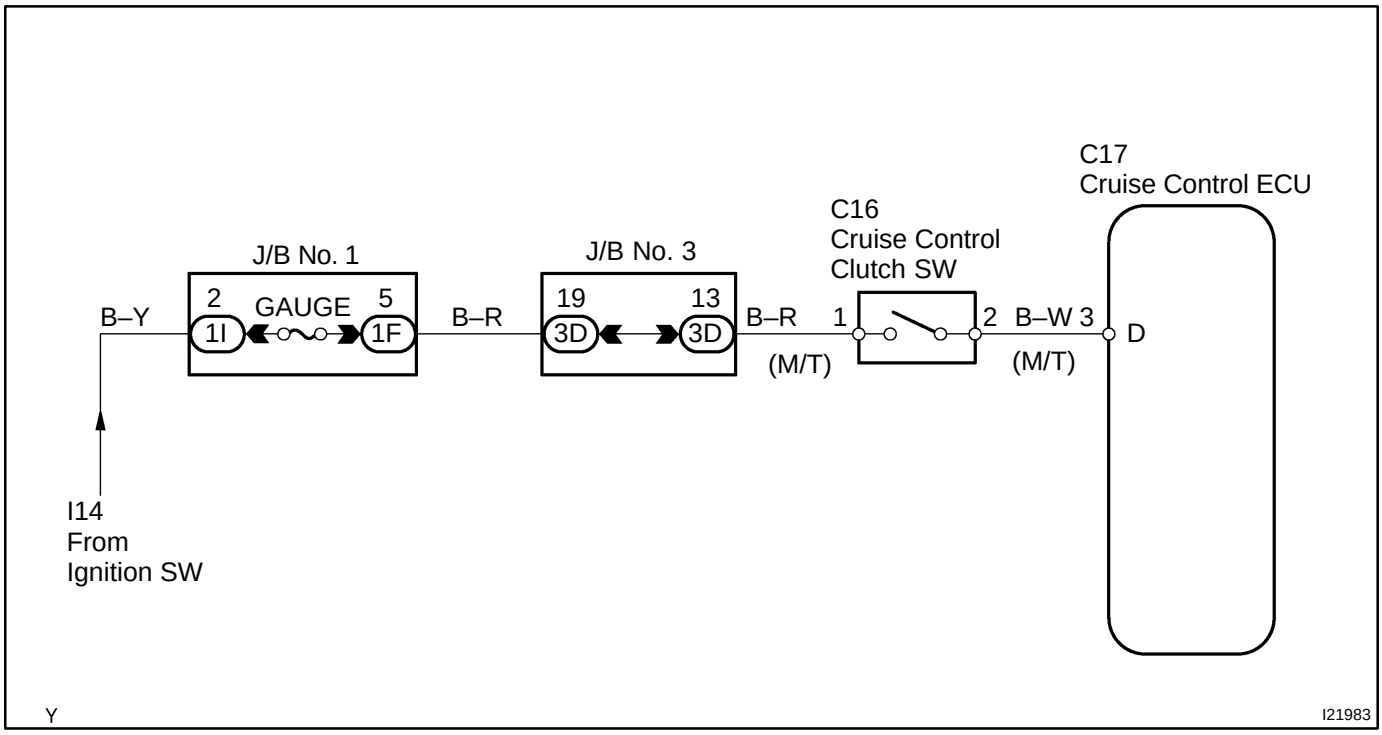

INSPECTION PROCEDURE

1	**Check starter operation.**

CHECK:

Check that the starter operates normally and that the engine starts.

NG → **Proceed to engine troubleshooting (See page DI–390).**

OK

2	Input signal check.

Input Signal	Indicator Light Blinking Pattern
Clutch Switch OFF (Depress clutch pedal)	Light ON / OFF, SW ON, SW OFF

PREPARATION:

See the input signal check on page DI–721.

CHECK:

Check the indicator light when the clutch pedal is depressed.

OK:

The indicator light goes off when the clutch pedal is depressed.

OK → **Proceed to next circuit inspection shown on problem symptoms table (See page DI–730).**

NG

3	Check voltage between terminal D of cruise control ECU and body ground.

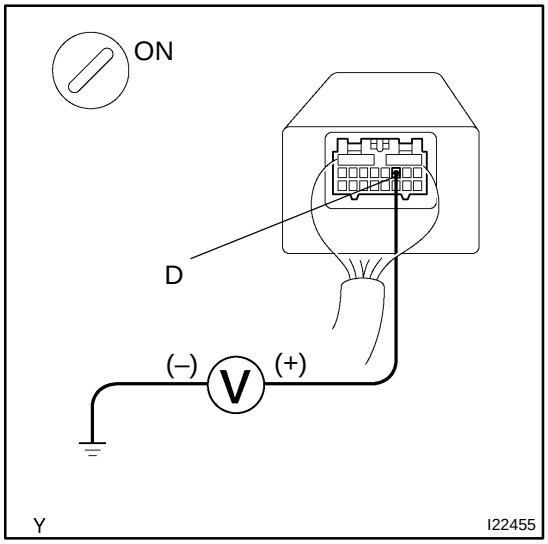

PREPARATION:

Turn the ignition switch ON.

CHECK:

Measure the voltage between terminal D of the ECU connector and the body ground when the clutch pedal is depressed and released.

OK:

Clutch Pedal	Voltage
Depressed	10 – 16 V
Released	Below 1 V

OK → **Proceed to next circuit inspection shown on problem symptoms table (See page DI–730).**

NG

4	**Check for open in harness and connector between cruise control ECU and GAUGE fuse (See page IN–28).**

NG → **Repair or replace harness or connector.**

OK

Check and replace cruise control ECU (See page IN–28).

DI8ZP–03

CRUISE Main Indicator Light Circuit

CIRCUIT DESCRIPTION

When the cruise control main switch is turned ON, CRUISE main indicator light lights up.

WIRING DIAGRAM

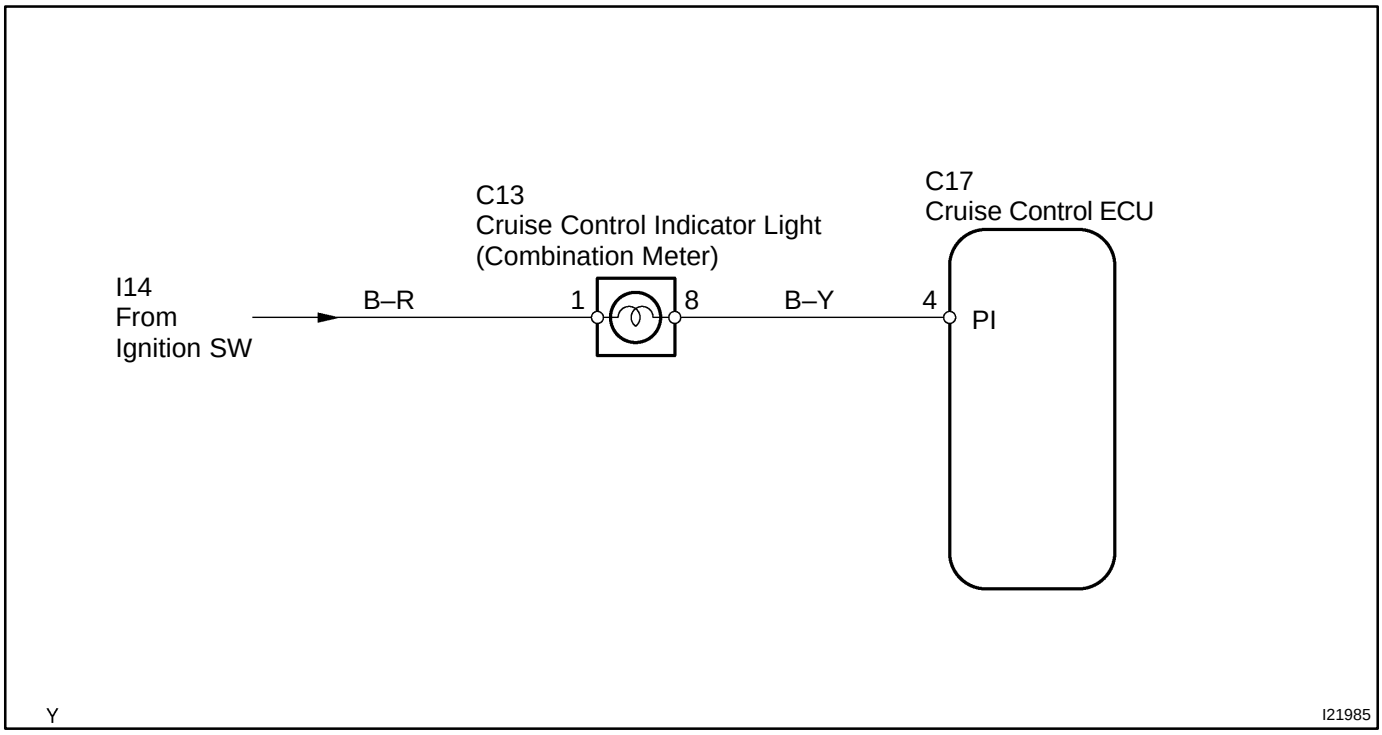

INSPECTION PROCEDURE

1	**Check voltage between terminal PI of cruise control ECU connector and body ground.**

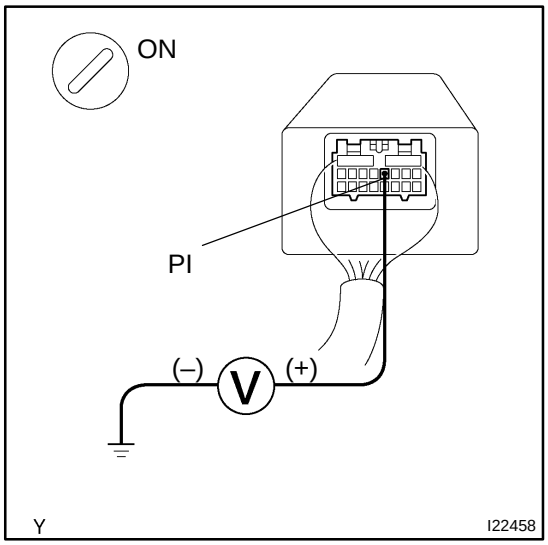

PREPARATION:
Turn the ignition switch ON.
CHECK:
Measure the voltage between terminal PI of the ECU connector and the body ground, when the main switch is ON and OFF.
OK:

Switch Position	Voltage
OFF	10 – 16 V
ON	Below 1.2 V

OK → **Proceed to next circuit inspection shown in problem symptoms table (See page DI–730).**

NG

2	**Check combination meter (See page BE–2).**

NG → **Replace combination meter.**

OK

Check and replace cruise control ECU (See page IN–28).

DI8ZK–03

Stop Light Switch Circuit

CIRCUIT DESCRIPTION

When the brake pedal is depressed, the stop light switch sends a signal to the ECU. When the ECU receives this signal, it cancels the cruise control.

A fail–safe function is provided so that the cancel functions normally even when there is a malfunction in the stop light signal circuit.

The cancel conditions: Battery positive voltage at terminal STP–

When the brake is on, battery positive voltage is normally applied through the STOP fuse and stop light switch to terminal STP– of the ECU, and the ECU turns the cruise control off.

If the harness connected to terminal STP– has an open circuit, terminal STP– will have battery positive voltage and the cruise control will be turned off.

Also, when the brake is on, the magnetic clutch circuit is cut mechanically by the stop light switch and turning the cruise control off. (See page DI–733 for operation of the magnetic clutch)

WIRING DIAGRAM

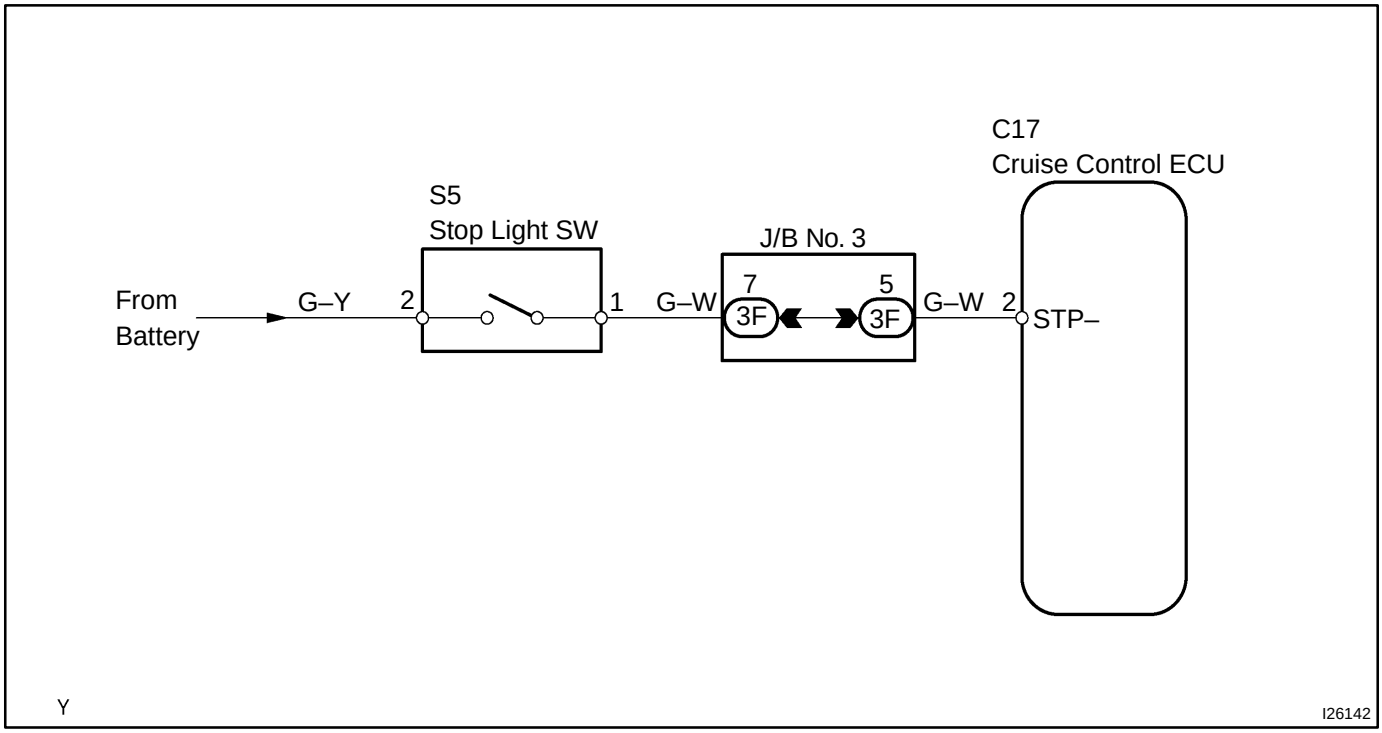

INSPECTION PROCEDURE

1	**Check operation of stop light.**

CHECK:

Check that the stop light comes on when the brake pedal is depressed, and turns off when the brake pedal is released.

NG → **Check stop light system (See page BE–2).**

OK

2	**Input signal check.**

Input Signal	Indicator Light Blinking Pattern
Stop Light Switch ON	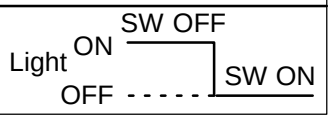

CHECK:

(a) See the input signal check on DI–721.

(b) Check the indicator light when the brake pedal is depressed.

OK:

The indicator light goes off when the brake pedal is depressed.

OK → **Proceed to next circuit inspection shown in problem symptoms table (See page DI–730).**

NG

3	Check voltage between terminal STP– of cruise control ECU connector and body ground.

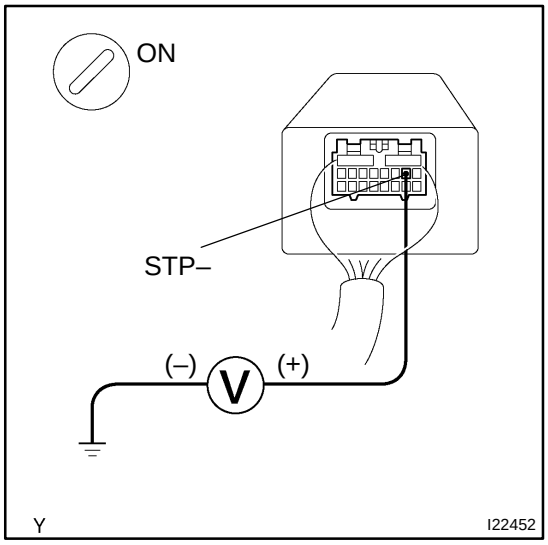

PREPARATION:

(a) Remove the ECU with the connectors being connected.

(b) Turn the ignition switch ON.

CHECK:

Measure the voltage between terminal STP– of the ECU connector and the body ground when the brake pedal is depressed and released.

OK:

Brake Pedal	Voltage
Depressed	10 – 16 V
Released	Below 1 V

OK → **Proceed to next circuit inspection shown in problem symptoms table (See page DI–730).**

NG

4	Check for open in harness and connectors between terminal STP– of cruise control ECU and stop light switch (See page IN–28).

NG → **Repair or replace harness or connector.**

OK

Check and replace cruise control ECU.

DI8ZQ–03

Diagnosis Circuit

CIRCUIT DESCRIPTION

This circuit sends a signal to the ECU that outputs a DTC.

WIRING DIAGRAM

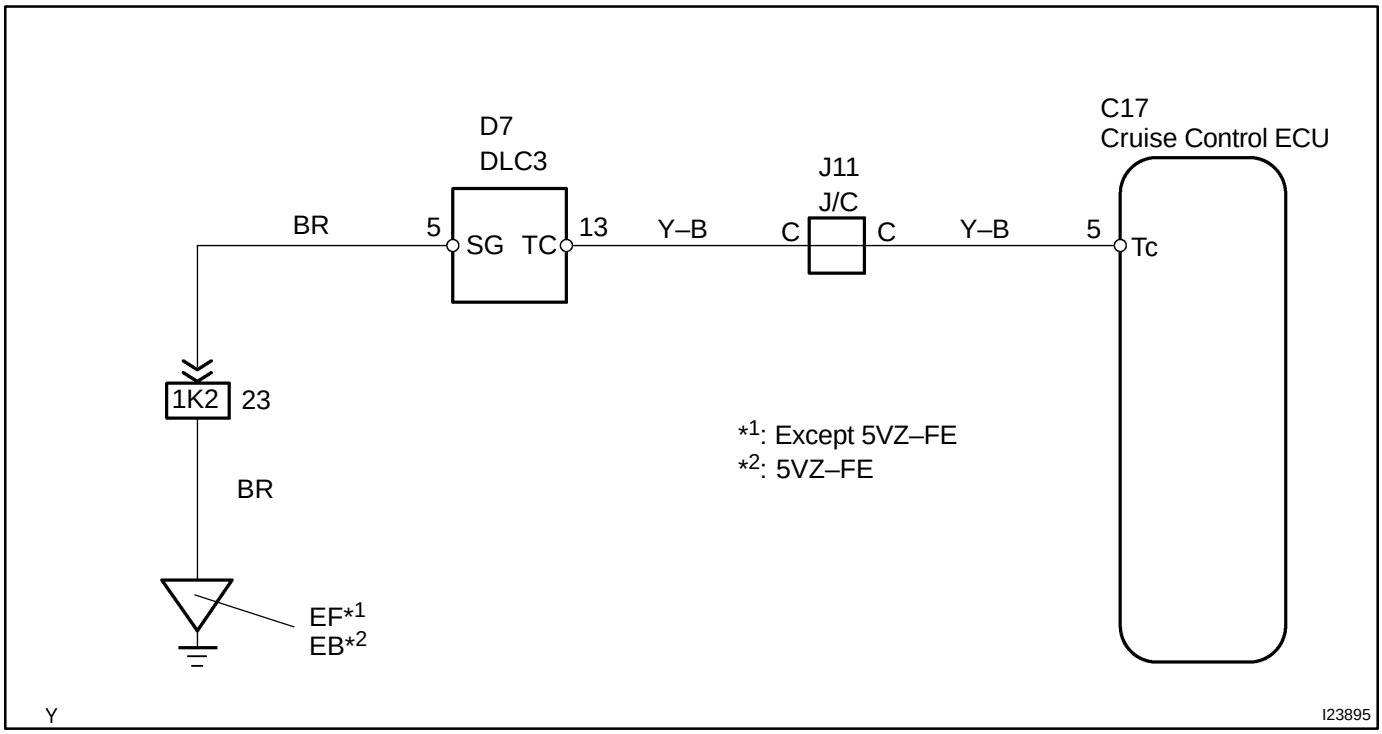

INSPECTION PROCEDURE

1	**Check voltage between terminals Tc and E_1 of DLC1.**

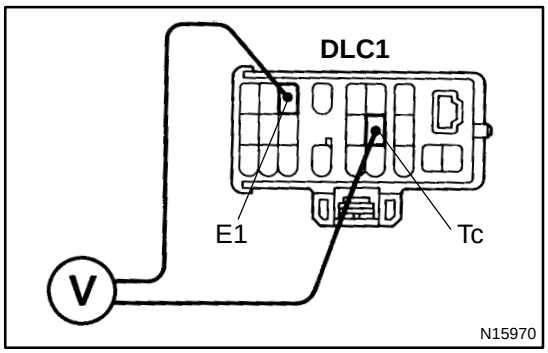

CHECK:

(a) Turn the ignition switch ON.

(b) Measure the voltage between terminals Tc and E_1 of the DLC1.

OK:

Voltage: 10 – 14 V

OK → **Proceed to next circuit inspection shown on problem symptoms table (See page DI–730).**

NG

2	**Check harness and connector between cruise control ECU and DLC1, and DLC1 and body ground (See page IN–28).**

NG → **Repair or replace harness or connector.**

OK

Check and replace cruise control ECU (See page IN–28).

DI8Z8–01

CUSTOMER PROBLEM ANALYSIS CHECK

CRUISE CONTROL SYSTEM Check Sheet

Inspector's name: _____

Customer's Name		**Registration No.**	
		Registration Year	
		Frame No.	
Date of Vehicle Brought in	/ /	**Odometer Reading**	**km** **Mile**

Condition of Problem Occurrence	**Date of Problem Occurrence**	/ /
	How Often does Problem Occur?	☑ Continuous ☑ Intermittent (Times a day)
	Vehicle Speed when Problem Occurred	**km** **Mile**

Symptoms	☑ Auto cancel occurs	● Driving condition ☐ City driving ☐ Freeway ☐ Uphill ☐ Downhill ● After cancel occurred, did the driver activate cruise control again? ☐ Yes ☐ No
	☐ Cancel does not occur	☐ With brake on ☐ Except D position shift ☐ At 40 km/h (25 mph) or less ☐ When control SW turns to CANCEL position
	☐ Cruise control malfunction	☐ Slip to acceleration side ☐ Slip to deceleration side ☐ Hunting occurs ☐ O/D cutoff does not occur ☐ O/D does not return
	☐ Switch malfunction	☐ SET ☐ ACC ☐ COAST ☐ RES ☐ CANCEL
	☐ Cruise main indicator light	☐ Remains on ☐ Does not light up ☐ Blinking

DTC Check	**1st Time**	☐ Normal code ☐ Malfunction code (Code)
	2nd Time	☐ Normal code ☐ Malfunction code (Code)

DI8ZA–02

DIAGNOSTIC TROUBLE CODE CHART

If a malfunction code is displayed during the DTC check, check the circuit listed by code in the table below and proceed to the appropriate page.

DTC No. (See page)	Detection Item	Trouble Area
11, 15 (DI–731)	Actuator Motor Circuit	• Actuator motor • Harness or connector between cruise control ECU and actuator motor • Cruise control ECU
12 (DI–733)	Actuator Magnetic Clutch Circuit	• STOP Fuse • Stop light switch • Actuator magnetic clutch • Harness or connector between cruise control ECU and actuator magnetic clutch, and actuator magnetic clutch and body ground • Cruise control ECU
14 (DI–736)	Actuator Mechanical Malfunction	• Actuator motor (actuator lock: motor, arm) • Cruise control ECU
21 (DI–738)	Open in Vehicle Speed Sensor Circuit	• Combination meter • Harness or connector between cruise control ECU and combination meter, and combination meter and vehicle speed sensor • Vehicle speed sensor • Cruise control ECU
23 (DI–741)	Vehicle Speed Signal Abnormal	• Vehicle speed sensor • Cruise control ECU
41	Cruise control ECU	• Cruise control ECU
42	Source voltage drop	• Power source
51 (DI–742)	Idle Signal Circuit	• Throttle position sensor • Harness or connector between ECM and throttle position sensor • Harness or connector between cruise control ECU and ECM • Cruise control ECU

CRUISE CONTROL SYSTEM (w/o ETCS–i)

DI8Z7–02

HOW TO PROCEED WITH TROUBLESHOOTING

Troubleshooting in accordance with the procedure on the following pages.

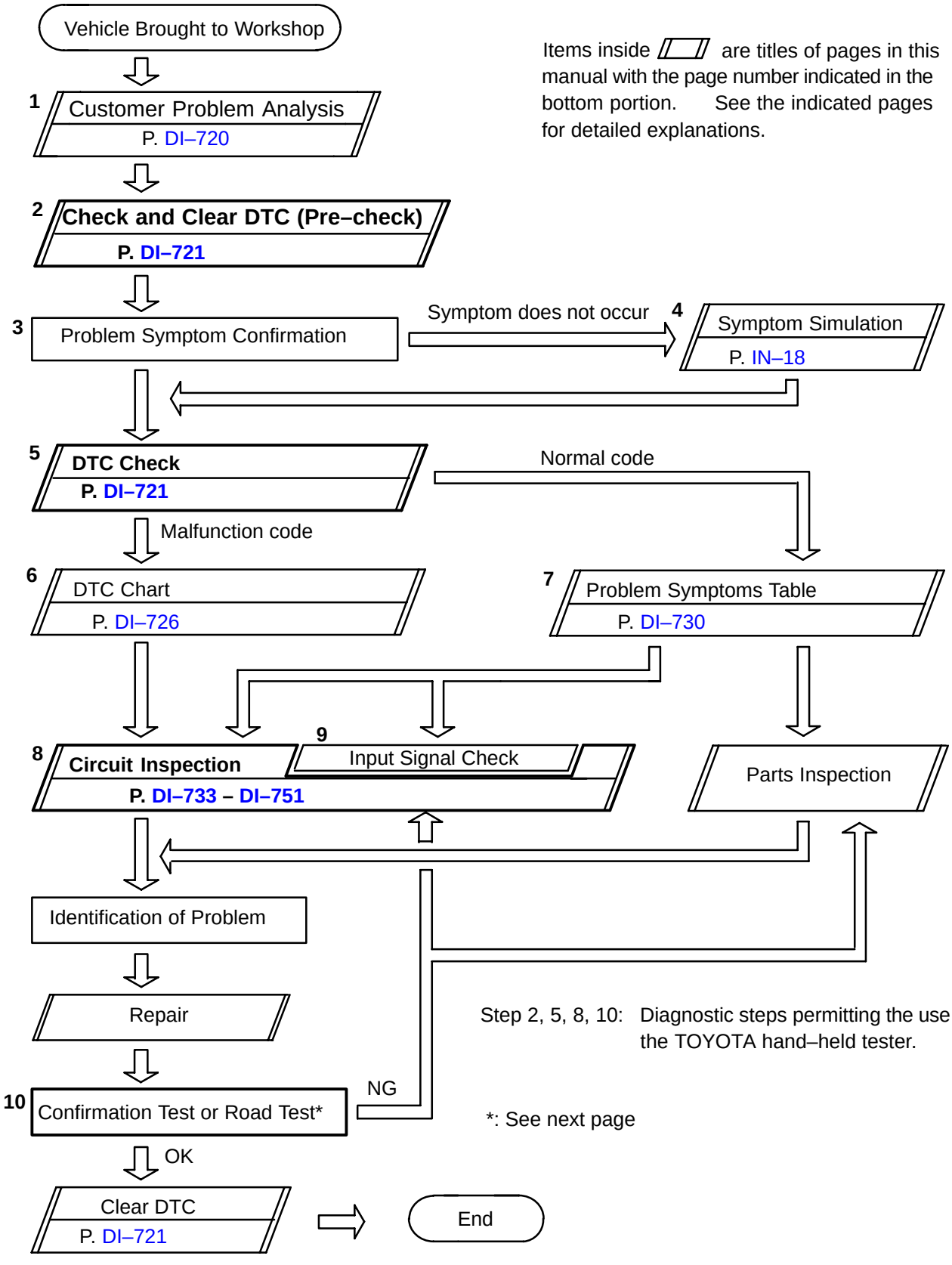

DI8ZB–03

PARTS LOCATION

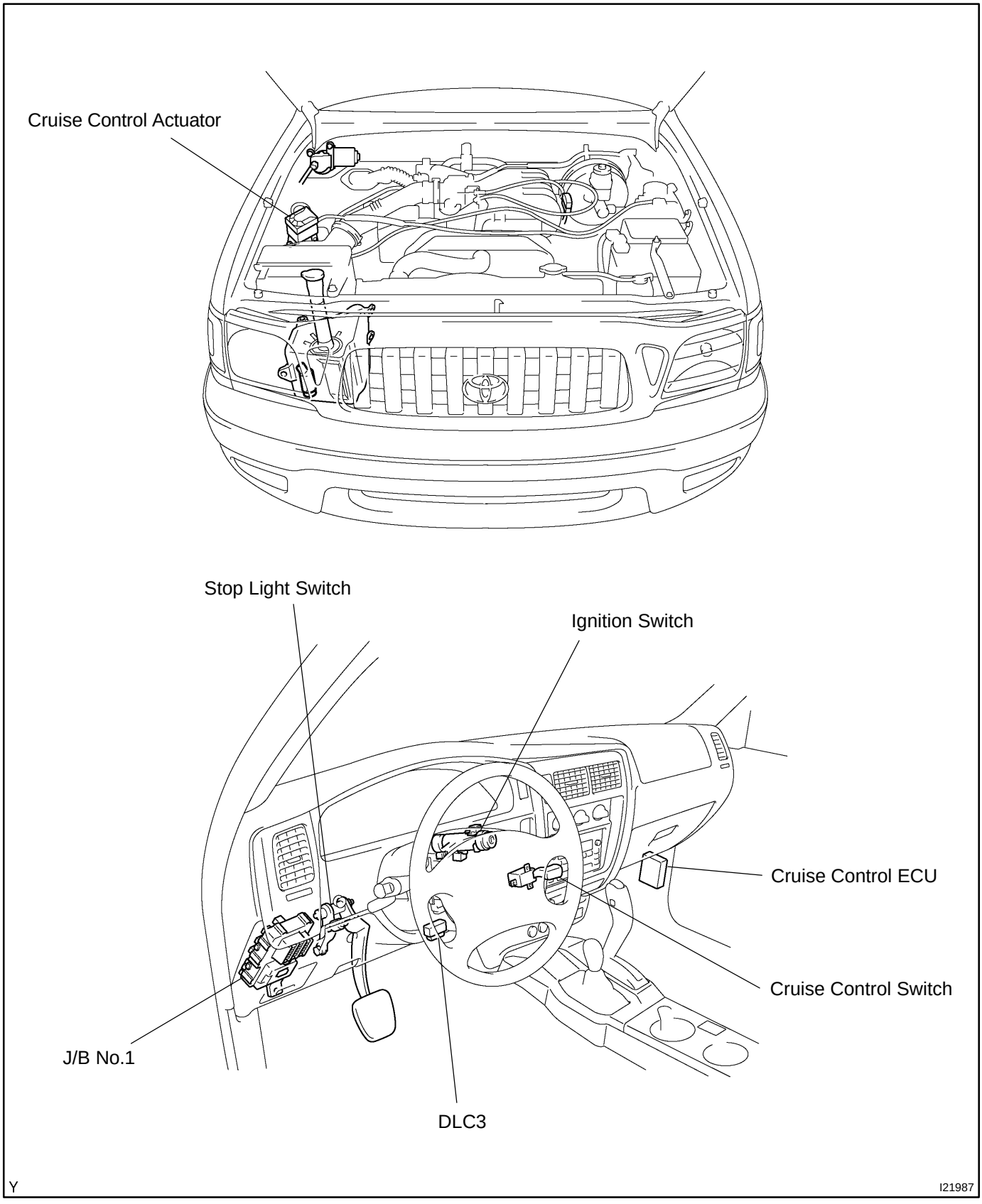

DI8Z9–03

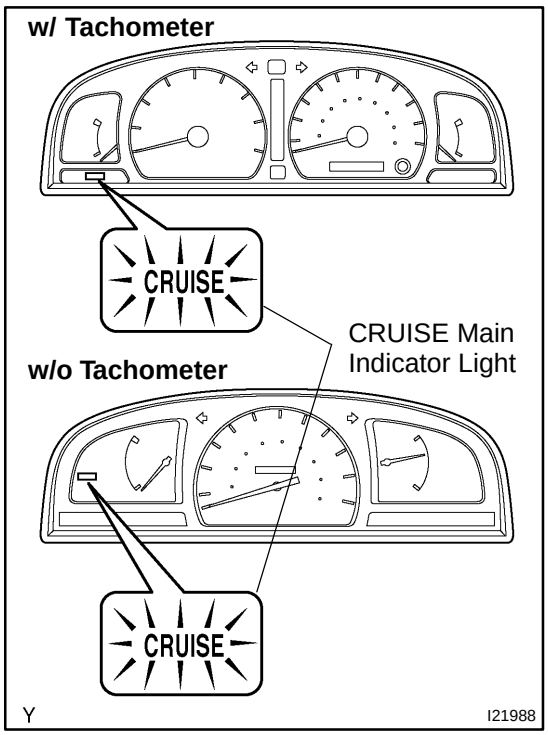

PRE–CHECK

1. DIAGNOSIS SYSTEM

(a) Check the indicator.

(1) Turn the ignition switch ON.

(2) Check that the CRUISE main indicator light comes on when the cruise control main switch is turned ON, and that the indicator light goes off when the main switch is turned OFF.

HINT:

If the indicator check result is not normal, proceed to a trouble-shooting of the combination meter section (See page BE–2).

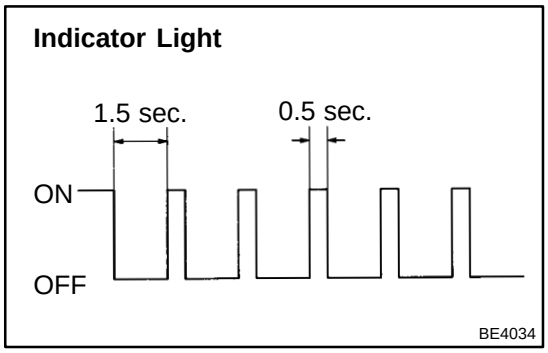

(b) Check the DTC.

HINT:

If a malfunction has occurs in the No. 1 vehicle speed sensor or actuator, etc. during the cruise control driving, the ECU actuates AUTO CANCEL of the cruise control and turns on and off the CRUISE main indicator light to inform the driver of a malfunction. At the same time, the malfunction is stored in the memory as a DTC.

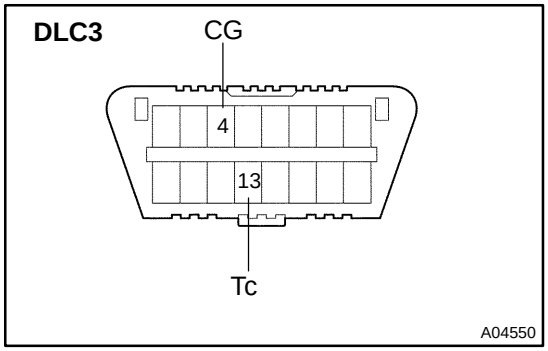

(c) Using diagnosis check wire, check the output of the DTC.

(1) Turn the ignition switch ON.

(2) Using SST, connect terminals Tc and CG of the DLC3.

SST 09843–18040

(3) Read the DTC on the CRUISE main indicator light.

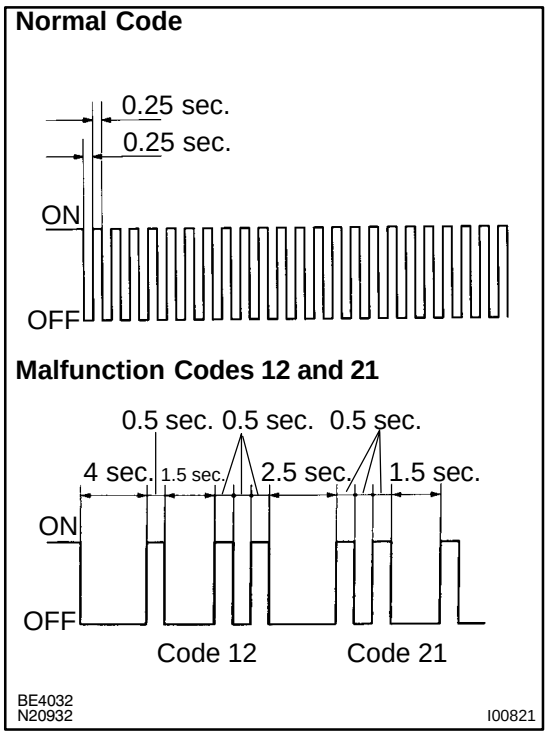

HINT:

- If a DTC is not output, inspect the diagnosis circuit (See page DI–726).
- As an example, the blinking patterns for codes; normal, 12 and 21 are shown in the illustration.

2. DTC CLEARANCE (ERASE MODE)

HINT:

During in the erase mode, DTC detection dose not work.

(a) Stop the vehicle.

(b) Using SST, connect terminals Tc and CG of the DLC3
SST 09843–18040

(c) Pull the cruise control switch to CANCEL.

(d) On the above method condition, turn on the cruise control main switch 5 times within 3 seconds.

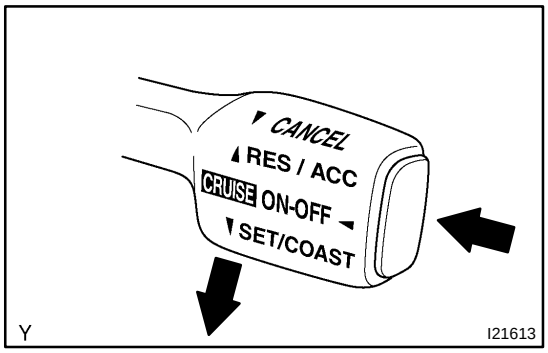

3. Road Test:

PROBLEM SYMPTOM CONFIRMATION

(a) Inspect the SET switch.

(1) Push the main switch ON.

(2) Drive at a desired speed (40 km/h (25 mph) or higher).

(3) Push the control switch downward for the SET/COAST.

(4) After releasing the switch, check that the vehicle cruises at the desired speed.

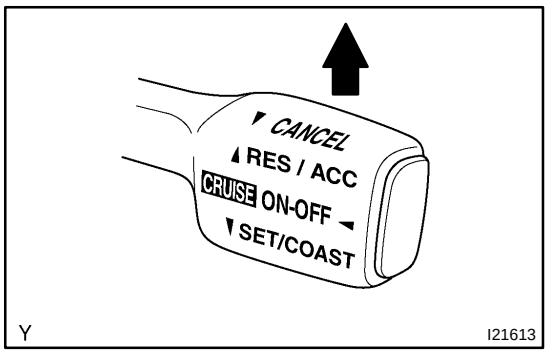

(b) Inspect the ACC (acceleration) switch.

(1) Push the main switch ON.

(2) Drive at a desired speed (40 km/h (25 mph) or higher).

(3) Check that the vehicle speed increases while the control switch is turned to RES/ACC, and that the vehicle cruises at the set speed when the switch is released.

(4) Momentarily push the control switch upward in the RES/ACC direction and then immediately release it. Check that the vehicle speed increases by about 1.6 km/h (Tap–up function).

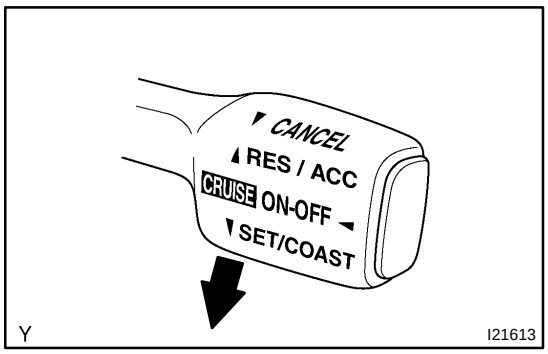

(c) Inspect the COAST switch.
(1) Push the main switch ON.
(2) Drive at a desired speed (40 km/h (25 mph) or higher).
(3) Check that the vehicle speed decreases while the control switch is turned to SET/COAST, and the vehicle cruises at the set speed when the switch is released.
(4) Momentarily push the control switch downward for SET/COAST, and then immediately release it. Check that the vehicle speed decreases by about 1.6 km/h (Tap–down function).

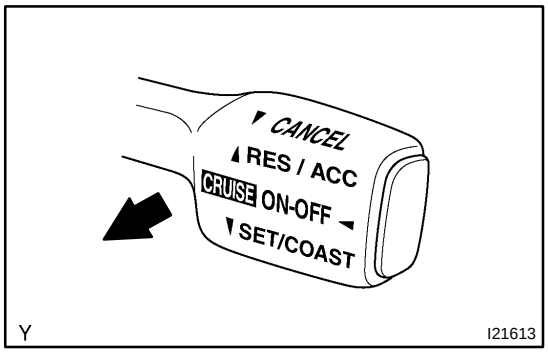

(d) Inspect the CANCEL switch.
(1) Push the main switch ON.
(2) Drive at a desired speed (40 km/h (25 mph) or higher).
(3) When operating one of the followings, check that the cruise control system is cancelled and that the normal driving mode is reset.
- Depress the brake pedal.
- M/T:
  Depress the clutch pedal.
- A/T:
  Shift into except D position.
- Push the main switch OFF.
- Pull the cruise control switch for CANCEL.

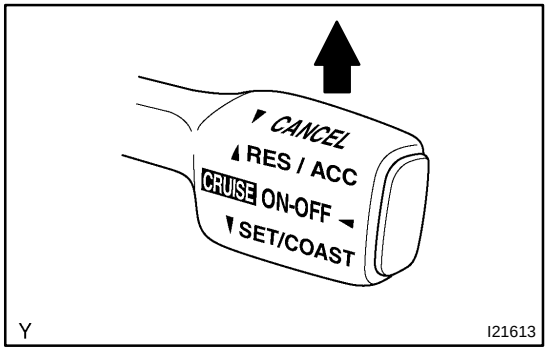

(e) Inspect the RES (resume) switch.
(1) Push the main switch ON.
(2) Drive at a desired speed (40 km/h (25 mph) or higher).
(3) When operating one of the followings, check that the cruise control system is cancelled and that the normal driving mode is reset.
- Depress the brake pedal.
- M/T:
  Depress the clutch pedal.

- A/T:
  Shift into except D position.
- Pull the cruise control switch for CANCEL.

(4) After the control switch is turned to RES/ACC at the driving speed of more than 40 km/h (25 mph), check that the vehicle restores the speed before the cancellation.

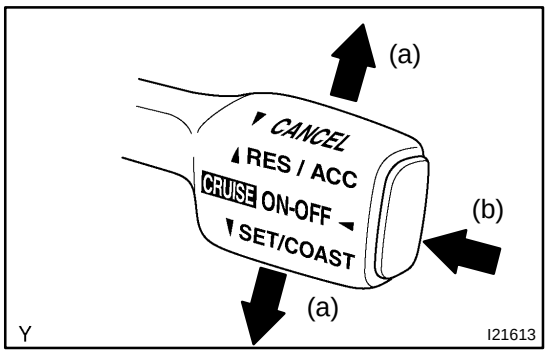

4. INPUT SIGNAL CHECK

HINT:

- For check No. 1 – No. 3:
  Turn the ignition switch ON.
- For check No. 4:
  Jack up the vehicle.
  Start the engine.
  Shift into the D position.

(a) Push the control switch to the SET/COAST or RES/ACC position and hold it down or up.
(b) Push the main switch ON.
(c) Check that the CRUISE main indicator light blinks twice or 3 times repeatedly after 3 seconds.
(d) Turn the SET/COAST or RES/ACC switch OFF.
(e) Operate each switch as listed in the table below.
(f) Read the blinking pattern of the CRUISE main indicator light.
(g) After performing the check, turn the main switch OFF.

HINT:

When 2 or more signals are input to the ECM, the lowest numbered code will be displayed first.

No.	Operation Method	CRUISE main Indicator Light Blinking Pattern	Diagnosis
1	Push SET/COAST switch ON	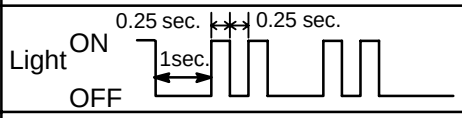	SET/COAST switch circuit is normal
2	Push RES/ACC switch ON		RES/ACC switch circuit is normal
3	Push CANCEL switch ON	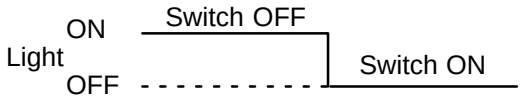	CANCEL switch circuit is normal
	Turn stop light switch ON Depress brake pedal		Stop light switch circuit is normal
	Turn PNP switch OFF (Shift to except D position)	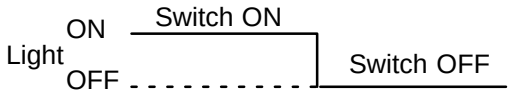	PNP switch circuit is normal
	Turn clutch switch OFF (Depress clutch pedal)		Clutch switch circuit is normal
4	Drive at about 40 km/h (25 mph)or higher		Vehicle speed sensor is normal
	Drive at about 40 km/h (25 mph) or below	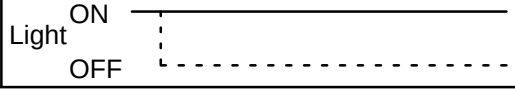	

DI8ZD–02

PROBLEM SYMPTOMS TABLE

Symptom	Suspected Area	See page
SET not occurring or CANCEL occurring (DTC is Normal)	1. Vehicle speed sensor 2. Stop light switch circuit 3. Park/neutral position switch (A/T) Clutch switch circuit (M/T) 4. Actuator motor circuit 5. Cruise control cable 6. Cruise control ECU	DI–738 DI–745 DI–751 DI–754 DI–731 DI–764 IN–28
SET not occurring or CANCEL occurring (DTC is not output)	1. ECU power source circuit 2. Cruise control ECU	DI–757 IN–28
Actual vehicle speed deviates above or below the set speed	1. Cruise control cable 2. Vehicle speed signal abnormal 3. Electronically controlled transmission communication circuit 4. Actuator motor circuit 5. Idle signal circuit (Main throttle position sensor) 6. Cruise control ECU	DI–764 DI–738 DI–748 DI–731 DI–742 IN–28
Gear shifting frequent between 3rd O/D when driving on uphill road (Hurting)	1. Electronically controlled transmission communication circuit 2. Cruise control ECU	DI–748 IN–28
Cruise control not cancelled, even when brake pedal is depressed	1. Cruise control cable 2. Stop light switch circuit 3. Actuator motor circuit 4. Cruise control ECU	DI–764 DI–745 DI–731 IN–28
Cruise control not cancelled, even when transmission is shifted to N postion	1. Cruise control cable 2. Park/neutral position switch circuit 3. Actuator motor circuit 4. Cruise control ECU	DI–764 DI–751 DI–731 IN–28
Control switch does not operate (SET/COAST, ACC/RES, CANCEL not possible)	1. Cruise control cable 2. Actuator motor circuit 3. Cruise control ECU	DI–764 DI–731 IN–28
SET possible at 40 km/h (25 mph) or less, or CANCEL does not operate at 40 km/h (25 mph) or less	1. Cruise control cable 2. Vehicle speed signal abnormal 3. Actuator motor circuit 4. Cruise control ECU	DI–764 DI–738 DI–731 IN–28
Poor response in ACC and RES modes	1. Cruise control cable 2. Electronically controlled transmission communication circuit 3. Actuator motor circuit 4. Cruise control ECU	DI–764 DI–748 DI–731 IN–28
O/D does not resume, even though the road is not uphill	1. Electronically controlled transmission communication circuit 2. Cruise control ECU	DI–748 IN–28
DTC memory erased	1. Cruise control ECU	IN–28
DTC is not output, or is output when should not be	1. Diagnosis circuit 2. Cruise control ECU	DI–762 IN–28
Cruise main indicator light remains on or falls to lighting up	1. Cruise main indicator light switch circuit 2. Cruise control ECU	DI–760 IN–28

DI8ZC–03

TERMINALS OF ECU

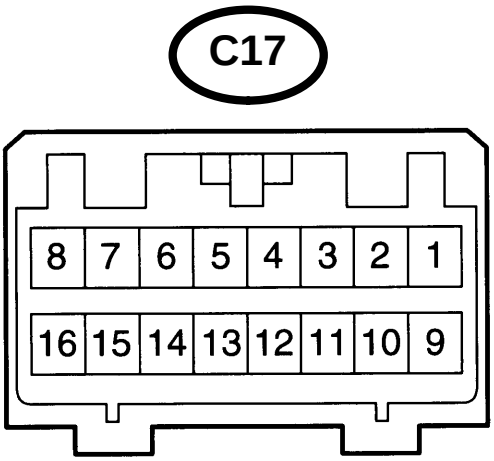

I00293

Symbols (Terminal No.)	Wiring Color	Condition	STD Voltage (V)
STP– (C17–2) – GND (C17–16)	G–W – W–B	Depress brake pedal	10 – 16
		Release brake pedal	Below 1
D (C17–3) – GND (C17–16)	B–W – W–B	Shift to positions except D	Below 1
		Shift to D position	10 – 16
PI (C17–4) – GND (C17–16)	B–Y – W–B	Ignition switch ON Cruise control main switch ON	Below 1.2
		Ignition switch ON Cruise control main switch OFF	10 – 16
TC (C17–5) – GND (C17–16)	Y–B – W–B	Ignition switch ON	10 – 16
		Ignition switch ON Connect terminals Tc and CG of DLC3	Below 2
ECT (C17–6) – GND (C17–16)	LG – W–B	During driving Gear position 3rd	8 – 16
		During driving Gear position O/D	Below 0.5
MC (C17–7) – GND (C17–16)	LG–B – W–B	During cruise control driving COAST switch held ON	9 – 15
		During cruise control driving ACC switch held ON	Below 1
L (C17–8) – GND (C17–16)	L–B – W–B	During cruise control driving	9 – 15
		Except during cruise control driving	Below 1
B (C17–9) – GND (C17–16)	Y–R – W–B	Ignition switch ON	10 – 16
CCS (C17–10) – GND (C17–16)	G–Y – W–B	Ignition switch ON	10 – 16
		Ignition switch ON MAIN switch held ON	Below 0.5
		Ignition switch ON SET/COAST switch held ON	4 – 7.9
		Ignition switch ON RES/ACC switch held ON	2 – 4.6
		Ignition switch ON CANCEL switch held ON	6 – 11
SPD (C17–12) – GND (C17–16)	G–O – W–B	Engine started Car stoppage	Below 1.5 or 4.7 – 16
		During driving (Pulse generated).	3 – 7
IDL (C17–13) – GND (C17–16)	LG–R – W–B	Ignition switch ON Throttle valve fully opened	10 – 16
		Ignition switch ON Throttle valve fully closed	Below 1.5
OD (C17–14) – GND (C17–16)	R–Y – W–B	During cruise control driving (Pulse generated) OD switch ON	1 – 16
		During cruise control driving OD switch OFF (3rd driving)	Below 1

MO (C17–15) – GND (C17–16)	R–W – W–B	During cruise control driving	ACC switch held ON	9 – 15
		During cruise control driving	COAST switch held ON	Below 1
GND (C17–16) – Body Ground	W–B – Body Ground	Constant		Below 1

DIB2L–01

ECM Power Source Circuit

CIRCUIT DESCRIPTION

When the ignition switch is turned ON, battery positive voltage is applied to the coil, closing the contacts of the EFI main relay (Marking: EFI) and supplying power to terminal +B of the ECM.

WIRING DIAGRAM

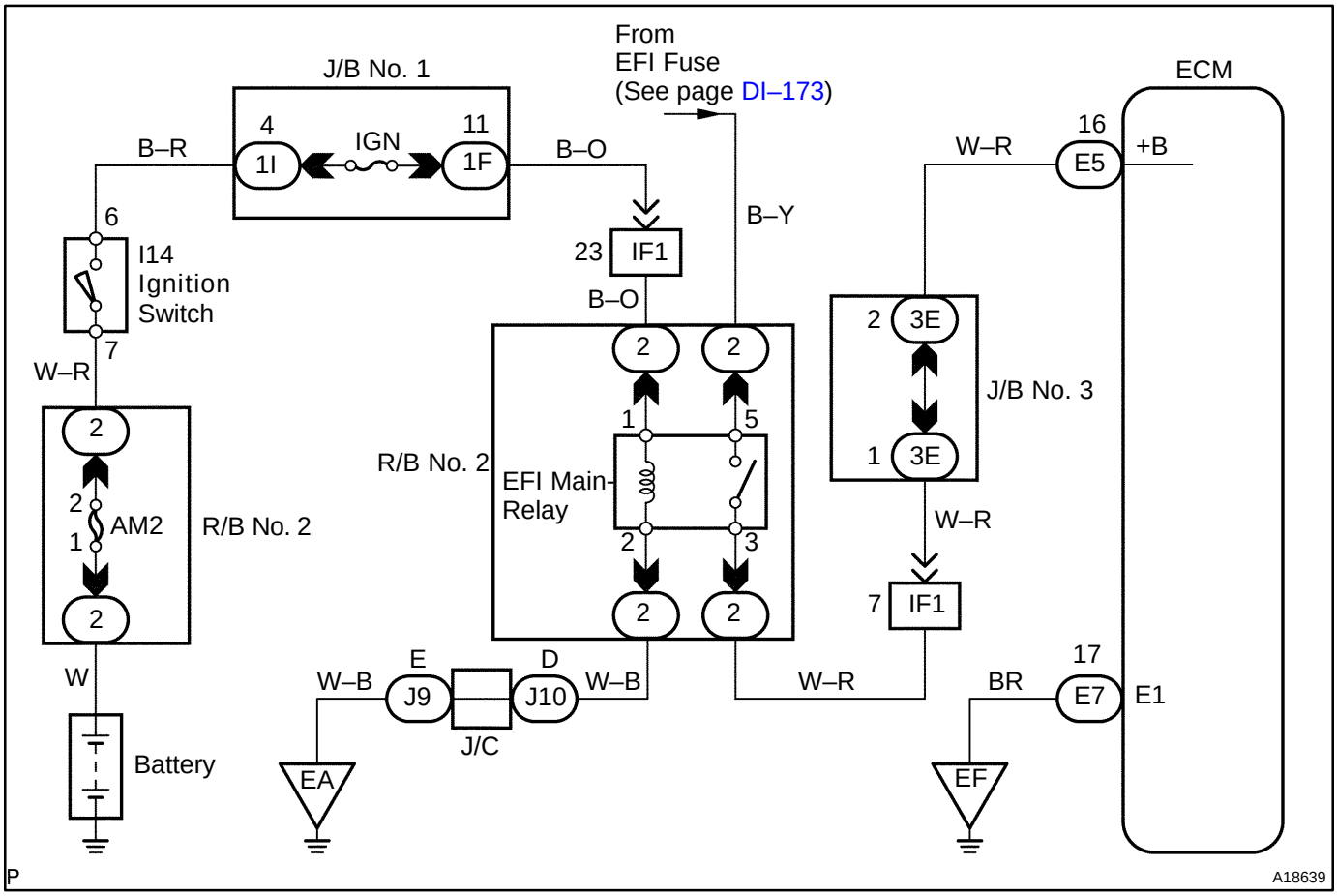

INSPECTION PROCEDURE

1	**Check voltage between terminals +B and E1 of ECM connectors.**

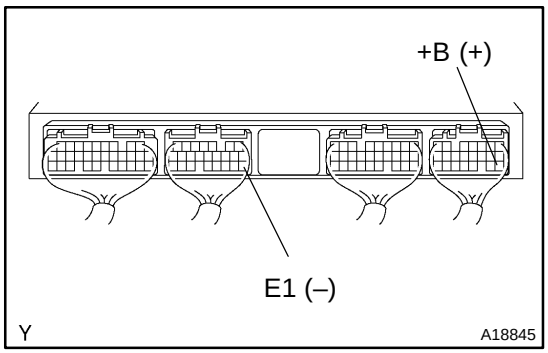

PREPARATION:

(a) Remove the glove compartment (See page SF–55).

(b) Turn the ignition switch ON.

CHECK:

Measure the voltage between terminals +B and E1 of the ECM connectors.

OK:

Voltage: 9 – 14 V

OK → **Proceed to next circuit inspection shown on Problem symptoms table (See page DI–24).**

NG

2	**Check for open in harness and connector between terminal E1 of ECM and body ground (See page IN–28).**

NG → **Repair or replace harness or connector.**

OK

3	**Check EFI main relay (Marking: EFI).**

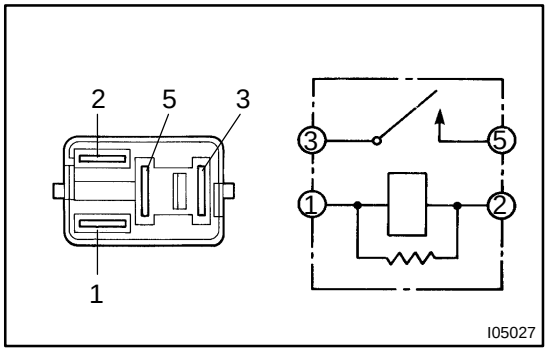

PREPARATION:

Remove the EFI main relay from RB No. 2.

CHECK:

Inspect the EFI main relay.

OK:

Condition	Tester connection	Specified condition
Constant	1 – 2	Continuity
	3 – 5	No continuity
Apply B+ between terminals 1 and 2.	3 – 5	Continuity

NG → **Replace EFI main relay.**

OK

4	**Check EFI fuse (See page DI–173, step 2).**

NG → **Check for short in all harness and components connected to EFI fuse.**

OK

5	**Check for open in harness and connector between EFI main relay (Marking: EFI) and battery, and EFI main relay and ECM (See page IN–28).**

NG → **Repair or replace harness or connector.**

OK

6	**Check IGN fuse.**

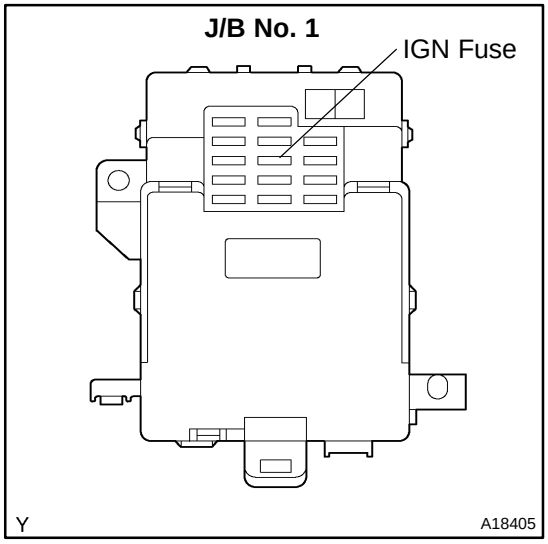

PREPARATION:
Remove the IGN fuse from the J/B No. 1.
CHECK:
Check the continuity of the IGN fuse.
OK:
Continuity

NG → **Check for short in all harness and components connected to IGN fuse.**

OK

7	Check ignition switch (See page BE–14).

NG → Replace ignition switch.

OK →

Check for open in harness and connector between ignition switch and EFI main relay (Marking: EFI), and EFI main relay and body ground (See page IN–28).

Fuel Pump Control Circuit

CIRCUIT DESCRIPTION

In the diagram below, when the engine is cranked, current flows from terminal ST of the ignition switch to the starter relay coil and also current flows to terminal STA of ECM (STA signal).
When the STA signal and NE signal are input to the ECM, Tr is turned ON, current flows to coil of the circuit opening relay, the relay switches on, power is supplied to the fuel pump and the fuel pump operates.
While the NE signal is generated (engine running), the ECM keeps Tr ON (circuit opening relay ON) and the fuel pump also keeps operating.

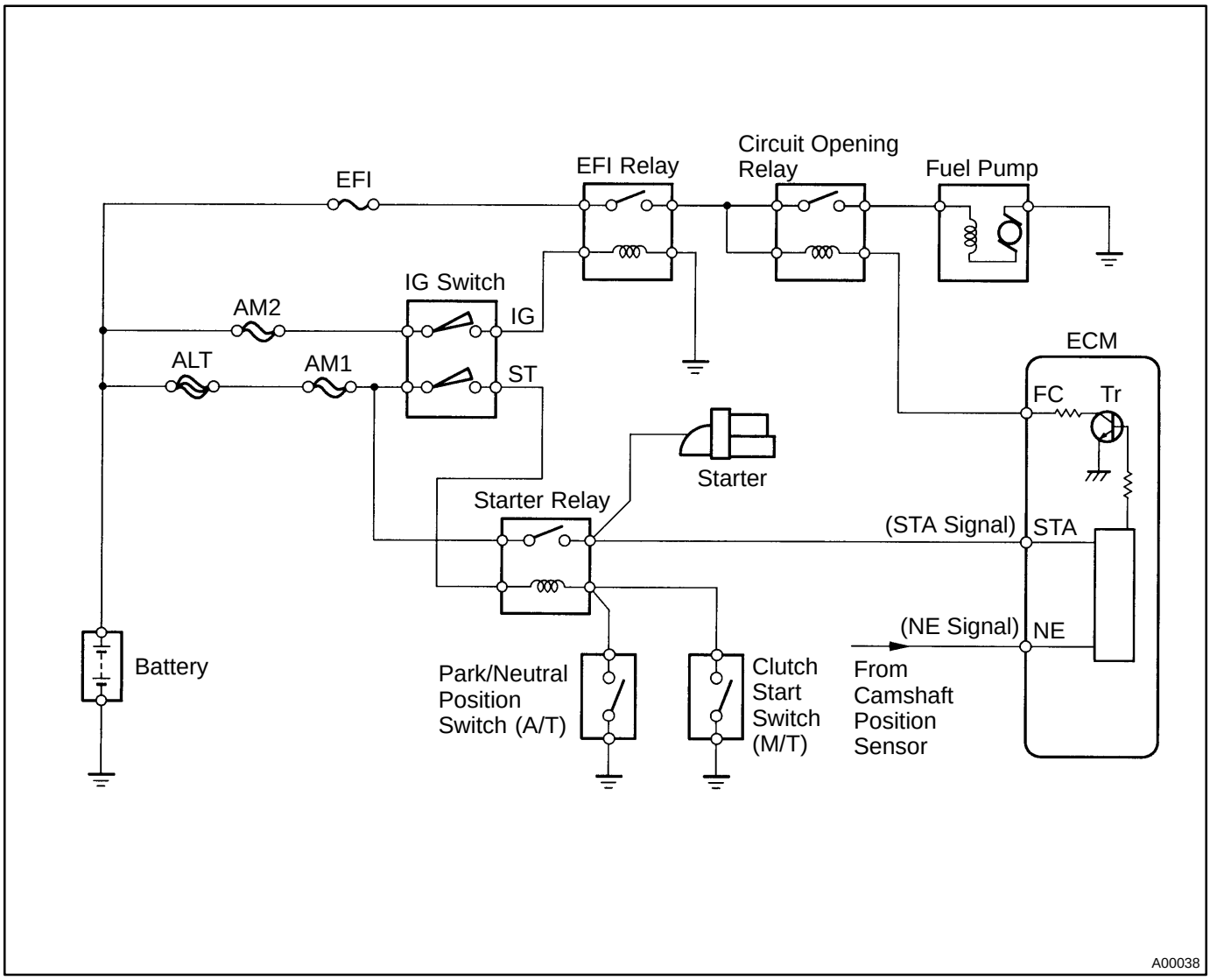

WIRING DIAGRAM

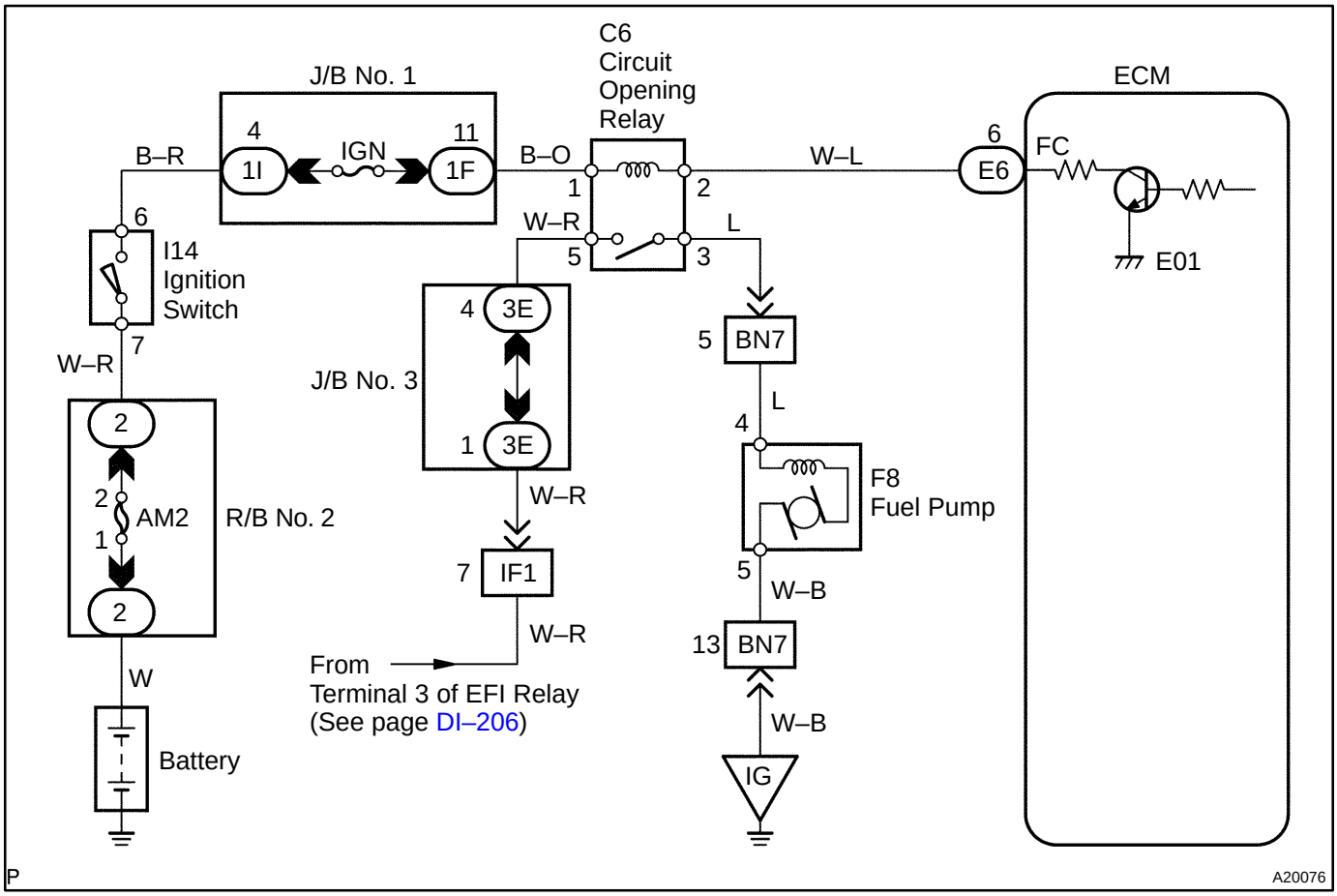

INSPECTION PROCEDURE

Hand–held tester:

1	**Connect hand–held tester, and check operation of fuel pump.**

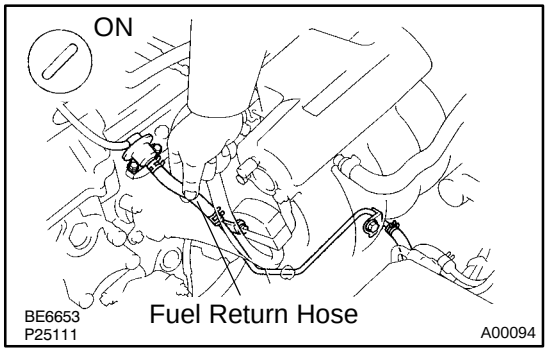

PREPARATION:

(a) Connect the hand–held tester to the DLC3.
(b) Turn the ignition switch ON and push the hand–held tester main switch ON.
(c) Select the item ”DIAGNOSIS/ENHANCED OBD II/ACTIVE TEST/FUEL PUMP/SPD”.
(d) Use the ACTIVE TEST mode to operate the fuel pump.

CHECK:

Check for fuel pressure in the fuel return hose when it is pinched off.

OK:

There is pressure in the fuel return hose.

HINT:

At this time, you will hear a fuel flowing noise.

OK → Proceed to next circuit inspection shown on problem symptoms table (See page DI–24).

NG

2	Check fuel pump (See page SF–5).

NG → Replace fuel pump.

OK

3	Check circuit opening relay (See page SF–40).

NG → Replace circuit opening relay.

OK

4	Check for open in harness and connector between circuit opening relay and fuel pump, and fuel pump and body ground (See page IN–28).

NG → Repair or replace harness or connector.

OK

5	Check voltage between terminal FC of ECM and body ground.

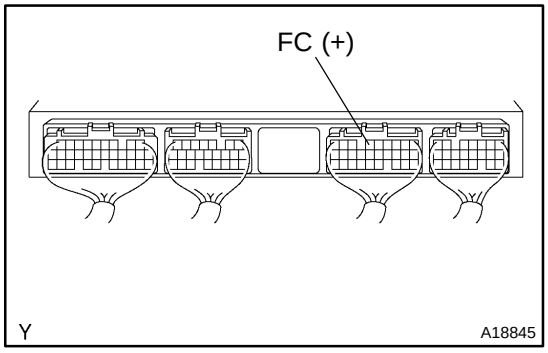

PREPARATION:

(a) Remove the glove compartment (See page SF–55).

(b) Turn the ignition switch ON.

CHECK:

Measure the voltage between terminal FC of the ECM connector and the body ground.

OK:

Voltage: 9 – 14 V

OK	**Proceed to next circuit inspection shown on problem symptoms table.**

NG

6	**Check for open in harness and connector between circuit opening relay and ECM (See page IN–28).**

NG	**Repair or replace harness or connector.**

OK

Check and replace ECM (See page IN–28).

OBD II scan tool (excluding hand–held tester):

1	**Check operation of fuel pump.**

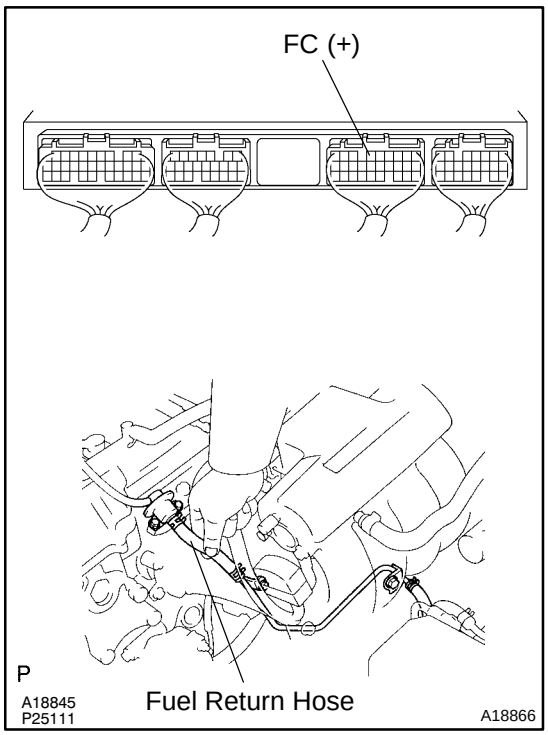

PREPARATION:

(a) Remove the glove compartment (See page SF–55).

(b) Turn the ignition switch ON.

CHECK:

(a) Connect between terminal FC of the ECM connector and the body ground.

(b) Check for fuel pressure in the fuel return hose when it is pinched by hand.

OK:

There is pressure in the fuel return hose.

HINT:

At this time, you will hear a fuel return flowing noise.

OK	**Proceed to next circuit inspection shown on problem symptoms table (See page DI–24).**

NG

2	Check fuel pump (See page SF–5).

NG → Replace fuel pump.

OK

3	Check circuit opening relay (See page SF–40).

NG → Replace circuit opening relay.

OK

4	Check for open in harness and connector between circuit opening relay and fuel pump, and fuel pump and body ground (See page IN–28).

NG → Repair or replace harness or connector.

OK

5	Check voltage between terminal FC of ECM and body ground.

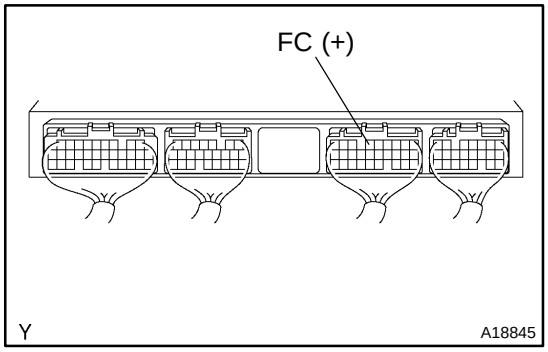

PREPARATION:

(a) Remove the glove compartment (See page SF–55).

(b) Turn the ignition switch ON.

CHECK:

Measure the voltage between terminal FC of the ECM connector and the body ground.

OK:

Voltage: 9 – 14 V

OK → Proceed to next circuit inspection shown on problem symptoms table.

NG

6	**Check for open in harness and connector between circuit opening relay and ECM (See page IN–28).**

NG → **Repair or replace harness or connector.**

OK

Check and replace ECM (See page IN–28).

DIB2K–01

DTC	P2A00	A/F Sensor Circuit Slow Response (Bank 1 Sensor 1)

CIRCUIT DESCRIPTION

Refer to DTC P2195 on page DI–185.

DTC No.	DTC Detection Condition	Trouble Area
P2A00	After engine is warmed up and during vehicle driving at engine speed 1,500 rpm or more and vehicle speed 60 km/h (28 mph) or more, if response characteristic of A/F sensor becomes deteriorated (2 trip detection logic)	• Open or short in A/F sensor circuit • A/F sensor • A/F sensor heater • EFI main relay • Air induction system • Fuel pressure • Injector • ECM

WIRING DIAGRAM

Refer to DTC P0134 on page DI–50.

INSPECTION PROCEDURE

HINT:

Hand–held tester only:

The narrowing down the trouble area is possible by performing ACTIVE TEST of the following ”A/F CONTROL” (A/F sensor, heated oxygen sensor or another can be distinguished).

Perform ACTIVE TEST by hand–held tester (A/F CONTROL).

HINT:

”A/F CONTROL” is an ACTIVE TEST which change the injection volume to –12.5 % or +25 %.

(1) Connect the hand–held tester to the DLC3 on the vehicle.
(2) Turn the ignition switch ON.
(3) Warm up the engine with the engine speed at 2,500 rpm for approx. 90 sec.
(4) Select the item ”DIAGNOSIS/ENHANCED OBD II/ACTIVE TEST/ A/F CONTROL”.
(5) Perform ”A/F CONTROL” when idle condition (press the ← or → button).

Result:

A/F sensor reacts in synchronizing with increase and decrease of injection volume (+25 % → rich output: Less than 3.0 V, –12.5 % → lean output: More than 3.35 V)

Heated oxygen sensor reacts in synchronizing with increase and decrease of injection volume (+25 % → rich output: More than 0.55 V, –12.5 % → lean output: Less than 0.4 V)

NOTICE:

However, there is a few second delay in the A/F sensor output. And there is about 20 seconds delay in the heated oxygen sensor.

	Output voltage of A/F sensor (sensor 1)	Output voltage of heated oxygen sensor (sensor 2)	Mainly suspect trouble area
Case 1	Injection volume +25 % –12.5 % Output voltage More than 3.35 V Less than 3.0 V **OK**	Injection volume +25 % –12.5 % Output voltage More than 0.55 V Less than 0.4 V **OK**	—
Case 2	Injection volume +25 % –12.5 % Output voltage No reaction **NG**	Injection volume +25 % –12.5 % Output voltage More than 0.55 V Less than 0.4 V **OK**	A/F sensor (A/F sensor, heater, A/F sensor circuit)
Case 3	Injection volume +25 % –12.5 % Output voltage More than 3.35 V Less than 3.0 V **OK**	Injection volume +25 % –12.5 % Output voltage No reaction **NG**	Heated oxygen sensor (heated oxygen sensor, heater, heated oxygen sensor circuit)
Case 4	Injection volume +25 % –12.5 % Output voltage No reaction **NG**	Injection volume +25 % –12.5 % Output voltage No reaction **NG**	Extremely rich or lean of the actual air–fuel ratio (Injector, fuel pressure, gas leakage in exhaust system, etc)

The following procedure of A/F CONTROL enable that to check its output (show its graph indication) of A/F sensor and heated oxygen sensor.

To display the graph indication. Select and push the ”YES or NO” button 2 data ”AFS B1S1 and O2S B1S2” or ”AFS B2S1 and O2S B2S2” and press button ”4” after selecting ”ACTIVE TEST/ A/F CONTROL/USER DATA”.

HINT:

- A low A/F sensor voltage could be caused by a rich air fuel mixture. Check for conditions that would cause the engine to run rich.
- A high A/F sensor voltage could be caused by a lean air fuel mixture. Check for conditions that would cause the engine to run lean.
- Read freeze frame data using the hand–held tester or the OBD II scan tool, as freeze frame records the engine conditions when a malfunction is detected. When troubleshooting, it is useful for determining whether the vehicle was running or stopped, the engine was warmed up or not, the air–fuel ratio was lean or rich, etc. at the time of the malfunction.

1	**Are there any other codes (besides DTC P2A00) being output?**

YES → **Go to relevant DTC chart (See page DI–16).**

NO

2	**Connect OBDII scan tool or hand–held tester, and read value for voltage output of A/F sensor.**

PREPARATION:

(a) Connect the hand–held tester or the OBD II scan tool to the DLC 3.
(b) Warm up the A/F sensor (bank 1 sensor 1) with the engine at 2,500 rpm for approximately 90 seconds.
(c) Read A/F sensor voltage on the OBD II scan tool or hand–held tester.

CHECK:

(a) Hand–held tester only:
Select the ”DIAGNOSIS/ENHANCED OBD II/SNAPSHOT/MANUAL SNAPSHOT/USER DATA” mode on the hand–held tester.
(b) Select ”AFS B1 S1/ENGINE SPD” and press button ”YES”.
(c) Monitor the A/F sensor voltage carefully.
(d) Check the A/F sensor voltage under the condition as follows.
  (1) Allow engine to idle for 30 seconds.
  (2) Engine is racing at approx. 2,500 rpm (when engine revolution is not suddenly changed).
  (3) Raise the engine speed to 4,000 rpm and release the accelerator pedal fully closed quickly.

OK:

Standard:
Condition (1) and (2)
Voltage change a little in the vicinity of 3.3 V (0.66 V)* (between approx. 3.1 – 3.5 V) as shown in the illustration.
Condition (3)
A/F ratio sensor voltage increase to 3.8 V (0.76 V)* or more during engine deceleration (when fuel cut) as shown in the illustration.

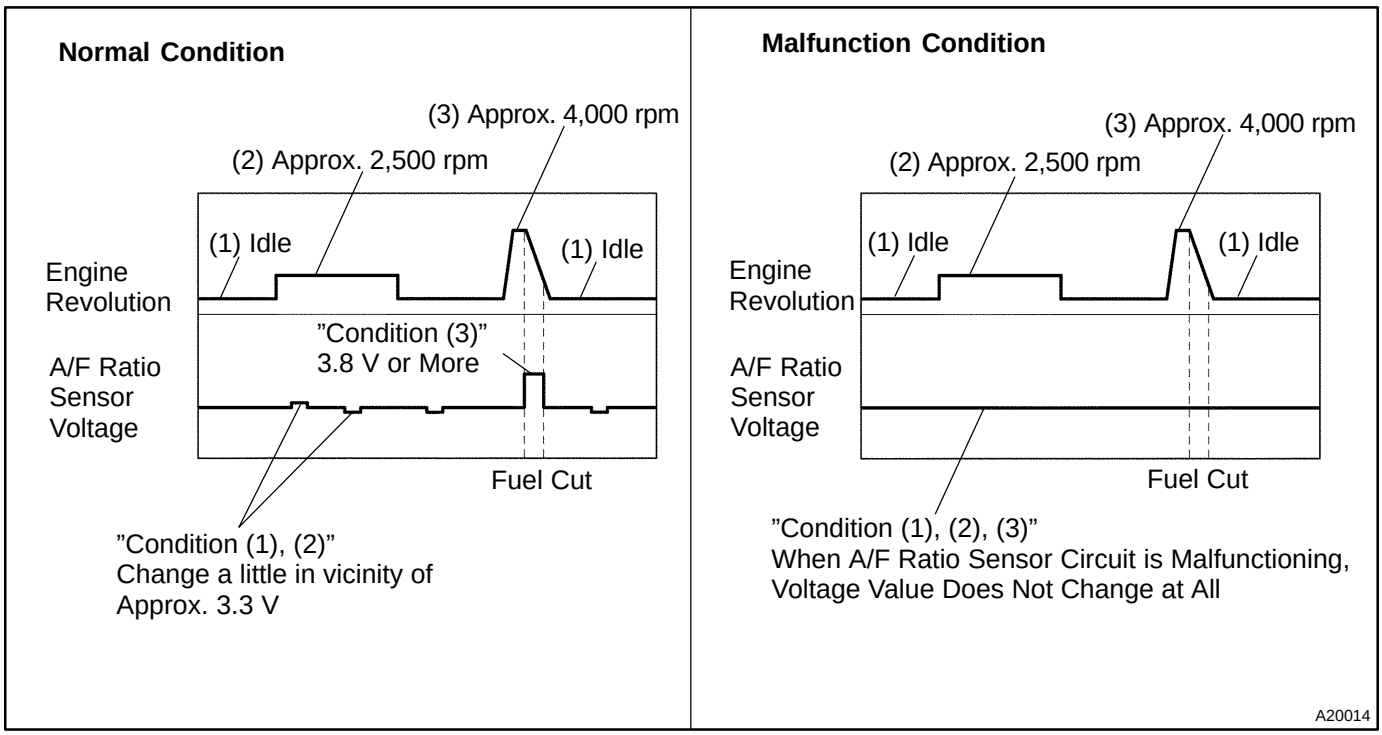

HINT:

- Whenever the output voltage of the A/F sensor remains at approx. 3.3 V (0.660 V)* (see dwg. 2) under any conditions as well as the above conditions, the A/F sensor may have an open–circuit. (This will happen also when the A/F sensor heater has an open–circuit.)
- Whenever the output voltage of the A/F sensor remains at a certain value of approx. 3.8 V (0.76 V)* or more, or 2.8 V (0.56 V)* or less (see dwg. 2) under any conditions as well as the above conditions, the A/F sensor may have a short–circuit.
- The ECM will stop fuel injection (fuel cut) during engine deceleration. This will cause a lean condition and should result in a momentary increase in A/F ratio sensor voltage.
- The ECM must establish a closed throttle position learned value to perform fuel cut. If the battery terminal has been disconnected, the vehicle must be driven over 10 mph to allow the ECM to relearn the closed throttle position.
- When the vehicle is driven:
  In the case that the output voltage of the A/F sensor is below 2.8 V (0.76 V)* during fuel enrichment (for example, when the vehicle tries to overtake another vehicle on a highway, the vehicle speed is suddenly increased with the accelerator pedal fully depressed), the A/F sensor are functioning normally.
- The A/F sensor is a current output element, and therefore the current is converted into voltage inside the ECM. If measuring voltage at connectors of A/F ratio sensor or ECM, you can obtain a constant voltage.

*: When using the OBD II scan tool (excluding hand–held tester).

OK	**Go to step 14.**

NG

3	Check resistance of A/F sensor heater.

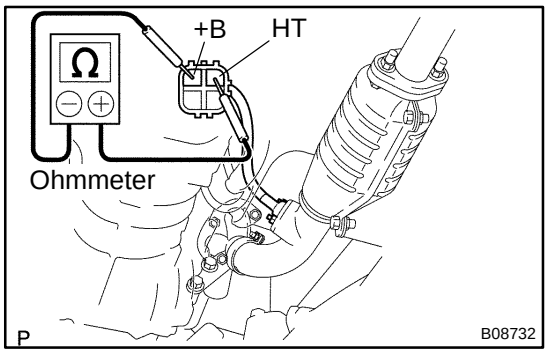

PREPARATION:
Disconnect the sensor connector.
CHECK:
Using an ohmmeter, measure the resistance between terminals +B and HT.
OK:

at 20°C (68°F)	0.8 – 1.4 Ω
at 800°C (1,472°F)	1.8 – 3.2 Ω

NG → **Replace A/F sensor.**

OK

4	Check EFI main relay (Marking: EFI).

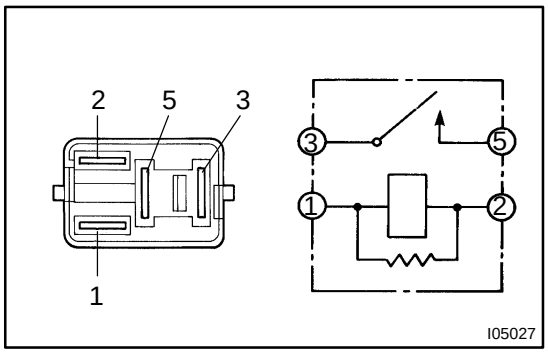

PREPARATION:
Remove the EFI main relay from RB No. 2.
CHECK:
Inspect the EFI main relay.
OK:

Condition	Tester connection	Specified condition
Constant	1 – 2	Continuity
	3 – 5	No continuity
Apply B+ between terminals 1 and 2.	3 – 5	Continuity

NG → **Replace EFI main relay.**

OK

5	Check for open and short in harness and connector between ECM and A/F sensor (See page IN–28).

NG → **Repair or replace harness or connector.**

OK

6	Check air induction system (See page SF–1).

NG → Repair or replace.

OK

7	Only for 3RZ–FE: Check EGR system (See page EC–13).

NG → Repair EGR system.

OK

8	Check fuel pressure (See page SF–5).

NG → Check and repair fuel pump, pressure regulator, fuel pipe line and filter (See page SF–1).

OK

9	Check injector injection (See page SF–18).

NG → Replace injector.

OK

10	Replace A/F sensor.

GO

11	Perform confirmation driving pattern (See page DI–185).

GO

12	Is there DTC P2A00 being output again?

YES → Check and replace ECM (See page IN–28) and perform confirmation driving pattern (See page DI–185)

NO

13	Did vehicle run out of fuel in past?

NO → Check for intermittent problems (See page DI–3).

YES

DTC P2A00 is caused by shortage of fuel.

14	Perform confirmation driving pattern (See page DI–185).

Go

15	Is there DTC P2A00 being output again?

NO → Go to step 19.

YES

16	Replace A/F sensor.

GO

17	Perform confirmation driving pattern (See page DI–185).

GO

18	Is there DTC P2A00 being output again?

YES → Check and replace ECM (See page IN–28) and perform confirmation driving pattern (See page DI–185)

NO

19	Did vehicle run out of fuel in past?

NO → Check for intermittent problems (See page DI–3).

YES

DTC P2A00 is caused by shortage of fuel.

DIB2I–01

DTC	P2195	Oxygen (A/F) Sensor Signal Stuck Lean (Bank 1 Sensor 1)

DTC	P2196	Oxygen (A/F) Sensor Signal Stuck Rich (Bank 1 Sensor 1)

CIRCUIT DESCRIPTION

HINT:

This DTC is related to A/F sensor, although the caption is oxygen sensor.

To obtain a high purification rate of the CO, HC and NOx components of the exhaust gas, a three–way catalytic converter is used. But, for the most efficient use of the three–way catalytic converter, the air–fuel ratio must be precisely controlled so that it is always close to the stoichiometric air–fuel ratio.

The A/F sensor has a characteristic of providing output voltage* approximately proportional to the existing air–fuel ratio. The A/F sensor output voltage* is used to provide feedback for the ECM to control the air–fuel ratio.

By the A/F sensor output, the ECM can determine the deviation amount from the stoichiometric air–fuel ratio and control the proper injection time immediately. If the A/F sensor is malfunctioning, ECM is unable to perform the accurate air–fuel ratio control.

The A/F sensor is equipped with a heater which heats the zirconia element. The heater is controlled by the ECM. When the intake air volume is low (the temperature of the exhaust gas is low), current flows to the heater to heat the sensor for the accurate oxygen concentration detection.

*: The voltage value changes at the inside of the ECM only.

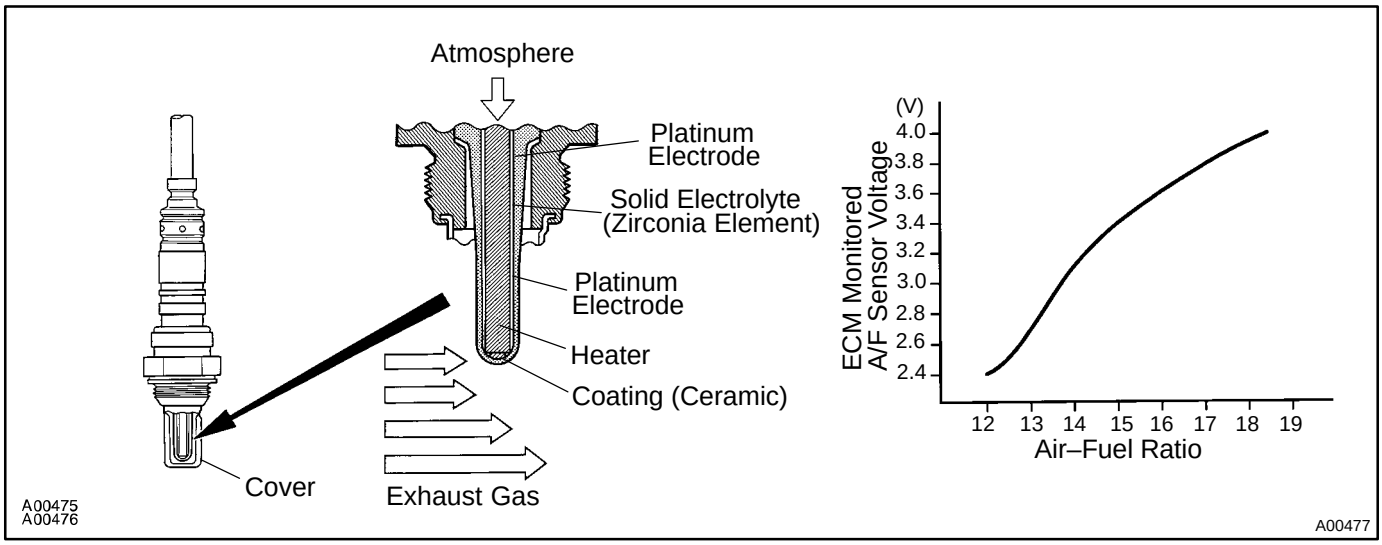

DTC No.	DTC Detection Condition	Trouble Area
P2195	Condition (a) continues for 10.0 sec. or more: (a) A/F sensor voltage > 3.8 V	• Open or short in A/F sensor circuit • A/F sensor • A/F sensor heater • EFI main relay • Air induction system • Fuel pressure • Injector • ECM
P2196	Condition (a) continues for 10.0 sec. or more: (a) A/F sensor voltage < 2.8 V	

HINT:

- After confirming DTC P2195, P2196, use the hand–held tester or the OBD II scan tool to confirm an output voltage of the A/F sensor (AFS B1 S1/O2S B1 S1) from the CURRENT DATA.
- The A/F sensor's output voltage and the short–term fuel value can be read using the OBD II scan tool or hand–held tester.
- The ECM controls the voltage of AF+ and AF– terminals of ECM to the fixed voltage. Therefore, it is impossible to confirm the A/F sensor output voltage without OBD II scan tool or hand–held tester.
- OBD II scan tool (excluding hand–held tester) displays the one fifth of the A/F sensor output voltage which is displayed on the hand–held tester.

WIRING DIAGRAM

Refer to DTC P0134 on page DI–50.

CONFIRMATION DRIVING PATTERN

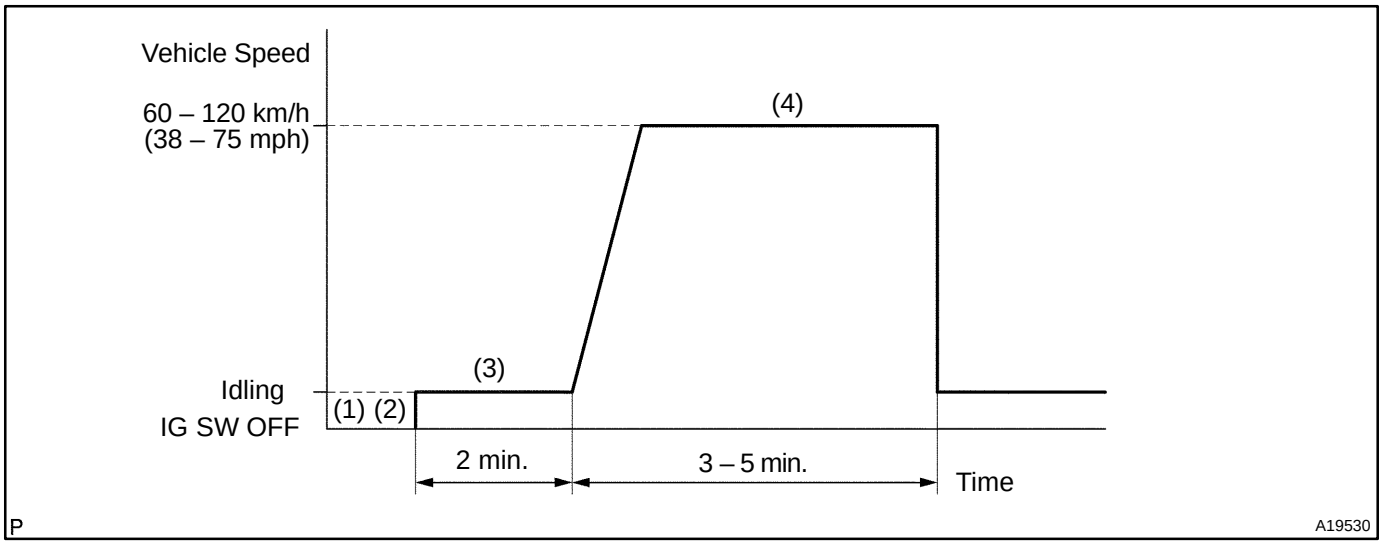

(a) Connect the hand–held tester to the DLC3.
(b) Switch the hand–held tester from the normal mode to the check mode (See page DI–3).
(c) Start the engine and warm it up for 2 min. with all the accessory switched OFF.
(d) Drive the vehicle at 60 – 120 km/h (38 – 75 mph) and the engine speed at 1,600 – 3,200 rpm for 3 – 5 min.

HINT:

If a malfunction exists, the MIL will light up during step (d).

NOTICE:

- **If the conditions in this test are not strictly followed, detection of the malfunction will not be possible.**
- **If you do not have a hand–held tester, turn the ignition switch OFF after performing steps (c) and (d), then perform steps (c) and (d) again.**

INSPECTION PROCEDURE

HINT:

Hand–held tester only:

The narrowing down the trouble area is possible by performing ACTIVE TEST of the following "A/F CONTROL" (A/F sensor, heated oxygen sensor or another can be distinguished).

Perform ACTIVE TEST by hand–held tester (A/F CONTROL).

HINT:
"A/F CONTROL" is an ACTIVE TEST which change the injection volume to –12.5 % or +25 %.

(1) Connect the hand–held tester to the DLC3 on the vehicle.
(2) Turn the ignition switch ON.
(3) Warm up the engine with the engine speed at 2,500 rpm for approx. 90 sec.
(4) Select the item "DIAGNOSIS/ENHANCED OBD II/ACTIVE TEST/ A/F CONTROL".
(5) Perform "A/F CONTROL" when idle condition (press the ← or → button).

Result:

A/F sensor reacts in synchronizing with increase and decrease of injection volume (+25 % → rich output: Less than 3.0 V, –12.5 % → lean output: More than 3.35 V)

Heated oxygen sensor reacts in synchronizing with increase and decrease of injection volume (+25 % → rich output: More than 0.55 V, –12.5 % → lean output: Less than 0.4 V)

NOTICE:

However, there is a few second delay in the A/F sensor output. And there is about 20 seconds delay in the heated oxygen sensor.

	Output voltage of A/F sensor (sensor 1)	Output voltage of heated oxygen sensor (sensor 2)	Mainly suspect trouble area
Case 1	Injection volume +25 % –12.5 % Output voltage More than 3.35 V Less than 3.0 V **OK**	Injection volume +25 % –12.5 % Output voltage More than 0.55 V Less than 0.4 V **OK**	—
Case 2	Injection volume +25 % –12.5 % Output voltage No reaction **NG**	Injection volume +25 % –12.5 % Output voltage More than 0.55 V Less than 0.4 V **OK**	A/F sensor (A/F sensor, heater, A/F sensor circuit)
Case 3	Injection volume +25 % –12.5 % Output voltage More than 3.35 V Less than 3.0 V **OK**	Injection volume +25 % –12.5 % Output voltage No reaction **NG**	Heated oxygen sensor (heated oxygen sensor, heater, heated oxygen sensor circuit)
Case 4	Injection volume +25 % –12.5 % Output voltage No reaction **NG**	Injection volume +25 % –12.5 % Output voltage No reaction **NG**	Extremely rich or lean of the actual air–fuel ratio (Injector, fuel pressure, gas leakage in exhaust system, etc)

The following procedure of A/F CONTROL enable that to check its output (show its graph indication) of A/F sensor and heated oxygen sensor.

To display the graph indication. Select and push the "YES or NO" button 2 data "AFS B1S1 and O2S B1S2" or "AFS B2S1 and O2S B2S2" and press button "4" after selecting "ACTIVE TEST/ A/F CONTROL/USER DATA".

HINT:

- A low A/F sensor voltage could be caused by a rich air fuel mixture. Check for conditions that would cause the engine to run rich.
- A high A/F sensor voltage could be caused by a lean air fuel mixture. Check for conditions that would cause the engine to run lean.
- Read frame freeze data using the hand–held tester or the OBD II scan tool, as freeze frame data records the engine conditions when a malfunction is detected. When troubleshooting, it is useful for determining whether the vehicle was running or stopped, the engine was warmed up or not, the air–fuel ratio was lean or rich, etc. at the time of the malfunction.

1	**Are there any other codes (besides A/F sensor circuit DTC codes) being output?**

YES → **Go to relevant DTC chart.**

NO

2	**Connect OBD II scan tool or hand–held tester, and read value for voltage output of A/F sensor.**

PREPARATION:

(a) Connect the hand–held tester or the OBD II scan tool to the DLC 3.
(b) Warm up the A/F sensor (bank 1 sensor 1) with the engine at 2,500 rpm for approximately 90 seconds.
(c) Read A/F sensor voltage on the OBD II scan tool or hand–held tester.

CHECK:

(a) Hand–held tester only:
Select the ”DIAGNOSIS/ENHANCED OBD II/SNAPSHOT/MANUAL SNAPSHOT/USER DATA” mode on the hand–held tester.
(b) Select ”AFS B1 S1/ENGINE SPD” and press button ”YES”.
(c) Monitor the A/F sensor voltage carefully.
(d) Check the A/F sensor voltage under the condition as follows.
  (1) Allow engine to idle for 30 seconds.
  (2) Engine is racing at approx. 2,500 rpm (when engine revolution is not suddenly changed).
  (3) Raise the engine speed to 4,000 rpm and release the accelerator pedal fully closed quickly.

OK:

Standard:

Condition (1) and (2)

Voltage change a little in the vicinity of 3.3 V (0.66 V)* (between approx. 3.1 – 3.5 V) as shown in the illustration.

Condition (3)

A/F ratio sensor voltage increase to 3.8 V (0.76 V)* or more during engine deceleration (when fuel cut) as shown in the illustration.

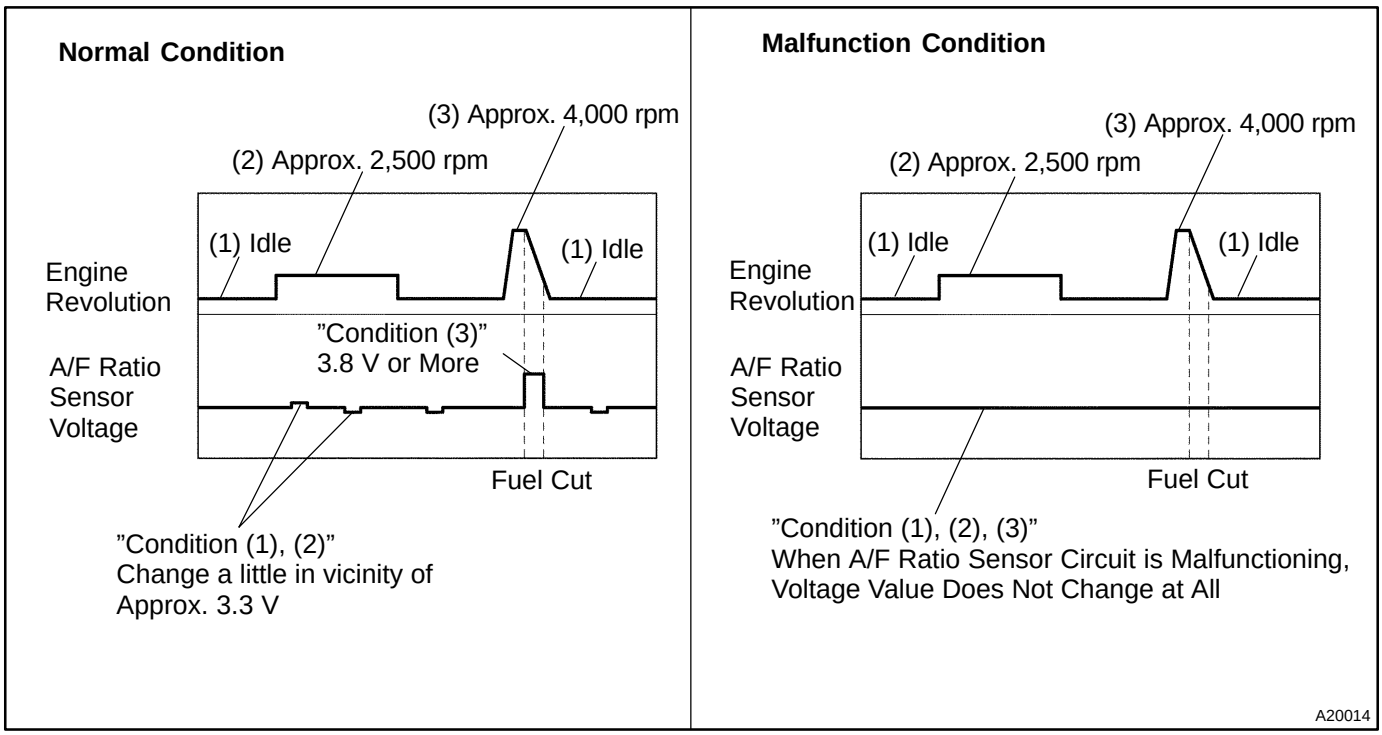

HINT:

- Whenever the output voltage of the A/F sensor remains at approx. 3.3 V (0.660 V)* (see dwg. 2) under any conditions as well as the above conditions, the A/F sensor may have an open–circuit. (This will happen also when the A/F sensor heater has an open–circuit.)
- Whenever the output voltage of the A/F sensor remains at a certain value of approx. 3.8 V (0.76 V)* or more, or 2.8 V (0.56 V)* or less (see dwg. 2) under any conditions as well as the above conditions, the A/F sensor may have a short–circuit.
- The ECM will stop fuel injection (fuel cut) during engine deceleration. This will cause a lean condition and should result in a momentary increase in A/F ratio sensor voltage.
- The ECM must establish a closed throttle position learned value to perform fuel cut. If the battery terminal has been disconnected, the vehicle must be driven over 10 mph to allow the ECM to relearn the closed throttle position.
- When the vehicle is driven:
  In the case that the output voltage of the A/F sensor is below 2.8 V (0.76 V)* during fuel enrichment (for example, when the vehicle tries to overtake another vehicle on a highway, the vehicle speed is suddenly increased with the accelerator pedal fully depressed), the A/F sensor are functioning normally.
- The A/F sensor is a current output element, and therefore the current is converted into voltage inside the ECM. If measuring voltage at connectors of A/F ratio sensor or ECM, you can obtain a constant voltage.

*: When using the OBD II scan tool (excluding hand–held tester).

OK	**Go to step 14.**

NG

3	Check resistance of A/F sensor heater.

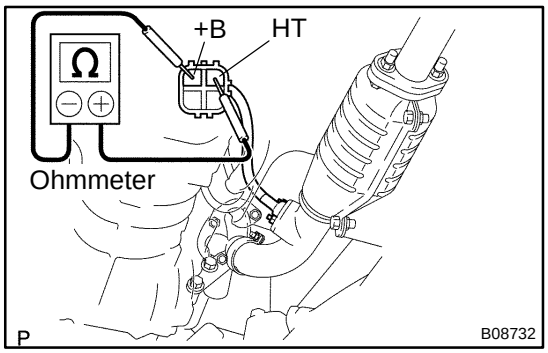

PREPARATION:
Disconnect the sensor connector.
CHECK:
Using an ohmmeter, measure the resistance between terminals +B and HT.
OK:

at 20°C (68°F)	0.8 – 1.4 Ω
at 800°C (1,472°F)	1.8 – 3.2 Ω

NG → **Replace A/F sensor.**

OK

4	Check EFI main relay (Marking: EFI).

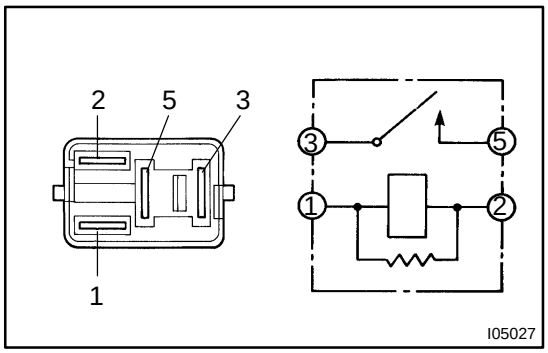

PREPARATION:
Remove the EFI main relay from RB No. 2.
CHECK:
Inspect the EFI main relay.
OK:

Condition	Tester connection	Specified condition
Constant	1 – 2	Continuity
	3 – 5	No continuity
Apply B+ between terminals 1 and 2.	3 – 5	Continuity

NG → **Replace EFI main relay.**

OK

5	Check for open and short in harness and connector between ECM and A/F sensor (See page IN–28).

NG → **Repair or replace harness or connector.**

OK

6	Check air induction system (See page SF–1).

NG → Repair or replace.

OK

7	Only for 3RZ–FE: Check EGR system (See page EC–13).

NG → Repair EGR system.

OK

8	Check fuel pressure (See page SF–5).

NG → Check and repair fuel pump, pressure regulator, fuel pipe line and filter (See page SF–1).

OK

9	Check injector injection (See page SF–18).

NG → Replace injector.

OK

10	Replace A/F sensor.

GO

11	Perform confirmation driving pattern.

GO

12	Are there A/F sensor circuit DTC codes being output again?

YES → Check and replace ECM (See page IN–28) and perform confirmation driving pattern.

NO

13	Did vehicle run out of fuel in past?

NO → Check for intermittent problems (See page DI–3).

YES

A/F sensor circuit DTC codes are caused by shortage of fuel.

14	Perform confirmation driving pattern.

GO

15	Are there A/F sensor circuit DTC codes being output again ?

NO → Go to step 19.

YES

16	Replace A/F sensor.

GO

17	Perform confirmation driving pattern.

GO

18	Are there A/F sensor circuit DTC codes being output again ?

YES → Check and replace ECM (See page IN–28) and perform confirmation driving pattern.

NO

19	Did vehicle run out of fuel in the past ?

NO → Check for intermittent problems (See page DI–3).

YES

A/F sensor circuit DTC codes is caused by shortage of fuel.

DIB2J–01

DTC	P2237	Oxygen Sensor Pumping Current Circuit / Open (for A/F sensor) (Bank 1 Sensor 1)

CIRCUIT DESCRIPTION

Refer to DTC P2195 on page DI–185.

HINT:

This DTC is related to A/F sensor, although the caption is oxygen sensor.

DTC No.	DTC Detection Condition	Trouble Area
P2237	A/F sensor circuit (bank 1 sensor 1)	HINT: Main trouble area • Open or short in A/F sensor circuit
	Condition (a) and (b) continues for 5.0 sec. or more: (a) AF+ ≦ 0.5 V (b) AF+ > 4.5 V	• Open or short in A/F sensor circuit • A/F sensor • A/F sensor heater • EFI main relay
	Condition (a) and (b) continues for 5.0 sec. or more: (a) AF+ – AF– ≦ 0.1 V (b) AF+ – AF– > 0.8 V	

HINT:

- After confirming DTC P2195, P2196, P2237, use the hand−held tester or OBD II scan tool to confirm an output voltage of the A/F sensor (AFS B1 S1/O2S B1 S1) from the ”DIAGNOSIS/ENHANCED OBD II/DATA LIST/ALL”.
- The A/F sensor’s output voltage and the short–term fuel value can be read using the OBD II scan tool or hand–held tester.
- The ECM controls the voltage of AF+ and AF– terminals of ECM to the fixed voltage. Therefore, it is impossible to confirm the A/F sensor output voltage without OBD II scan tool or hand–held tester.
- OBD II scan tool (excluding hand–held tester) displays the one fifth of the A/F sensor output voltage which is displayed on the hand–held tester.

WIRING DIAGRAM

Refer to DTC P0134 on page DI–50.

INSPECTION PROCEDURE

HINT:

Hand–held tester only:

The narrowing down the trouble area is possible by performing ACTIVE TEST of the following ”A/F CONTROL” (A/F sensor, heated oxygen sensor or another can be distinguished).

Perform ACTIVE TEST by hand–held tester (A/F CONTROL).

HINT:

”A/F CONTROL” is an ACTIVE TEST which change the injection volume to –12.5 % or +25 %.

(1) Connect the hand–held tester to the DLC3 on the vehicle.
(2) Turn the ignition switch ON.
(3) Warm up the engine with the engine speed at 2,500 rpm for approx. 90 sec.
(4) Select the item ”DIAGNOSIS/ENHANCED OBD II/ACTIVE TEST/ A/F CONTROL”.
(5) Perform ”A/F CONTROL” when idle condition (press the ← or → button).

Result:

A/F sensor reacts in synchronizing with increase and decrease of injection volume (+25 % → rich output: Less than 3.0 V, –12.5 % → lean output: More than 3.35 V)

Heated oxygen sensor reacts in synchronizing with increase and decrease of injection volume (+25 % → rich output: More than 0.55 V, –12.5 % → lean output: Less than 0.4 V)

NOTICE:

However, there is a few second delay in the A/F sensor output. And there is about 20 seconds delay in the heated oxygen sensor.

	Output voltage of A/F sensor (sensor 1)	Output voltage of heated oxygen sensor (sensor 2)	Mainly suspect trouble area
Case 1	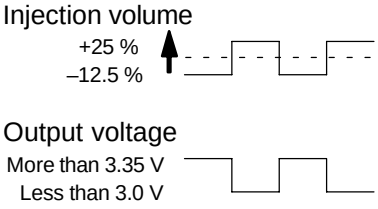 **OK**	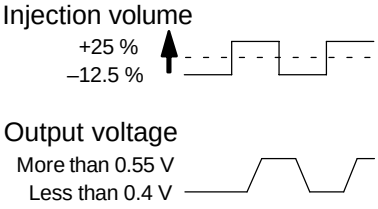 **OK**	—
Case 2	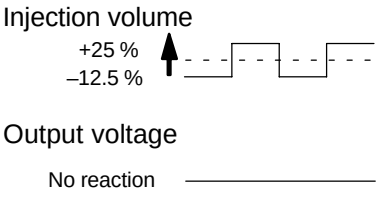 **NG**	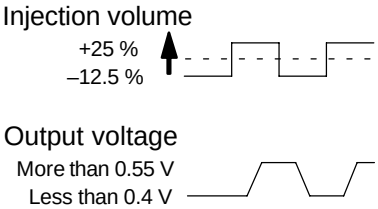 **OK**	A/F sensor (A/F sensor, heater, A/F sensor circuit)
Case 3	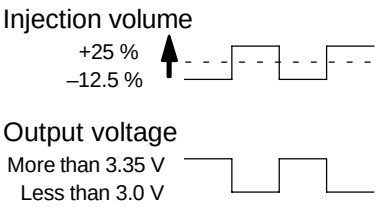 **OK**	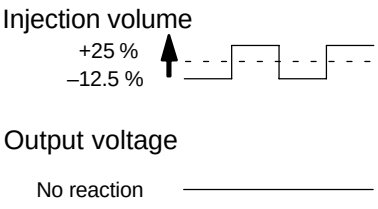 **NG**	Heated oxygen sensor (heated oxygen sensor, heater, heated oxygen sensor circuit)
Case 4	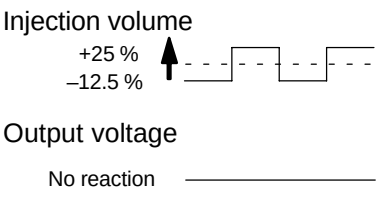 **NG**	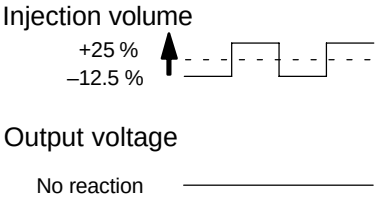 **NG**	Extremely rich or lean of the actual air–fuel ratio (Injector, fuel pressure, gas leakage in exhaust system, etc)

The following procedure of A/F CONTROL enable that to check its output (show its graph indication) of A/F sensor and heated oxygen sensor.

To display the graph indication. Select and push the ”YES or NO” button 2 data ”AFS B1S1 and O2S B1S2” or ”AFS B2S1 and O2S B2S2” and press button ”4” after selecting ”ACTIVE TEST/ A/F CONTROL/USER DATA”.

HINT:

Read frame freeze data using the hand–held tester or the OBD II scan tool, as freeze frame data records the engine conditions when a malfunction is detected. When troubleshooting, it is useful for determining whether the vehicle was running or stopped, the engine was warmed up or not, the air–fuel ratio was lean or rich, etc. at the time of the malfunction.

1	Check resistance of A/F sensor heater.

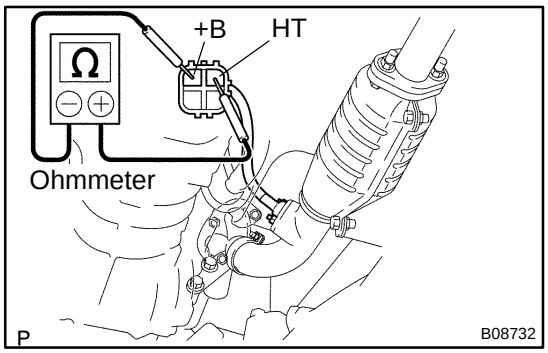

PREPARATION:
Disconnect the sensor connector.
CHECK:
Using an ohmmeter, measure the resistance between terminals +B and HT.
OK:

at 20˚C (68˚F)	0.8 – 1.4 Ω
at 800˚C (1,472˚F)	1.8 – 3.2 Ω

NG → **Replace A/F sensor.**

OK

2	Check EFI main relay (Marking: EFI).

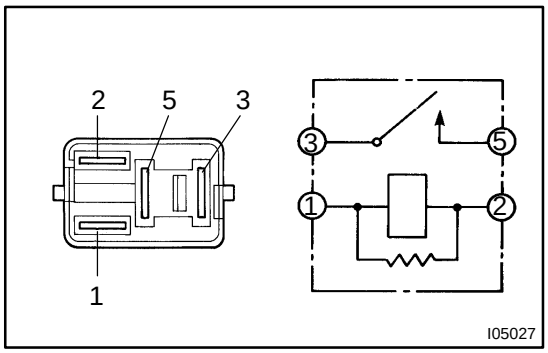

PREPARATION:
Remove the EFI main relay from RB No. 2.
CHECK:
Inspect the EFI main relay.
OK:

Condition	Tester connection	Specified condition
Constant	1 – 2	Continuity
	3 – 5	No continuity
Apply B+ between terminals 1 and 2.	3 – 5	Continuity

NG → **Replace EFI main relay.**

OK

3	**Check for open and short in harness and connector between ECM and A/F sensor (See page IN–28).**

NG → **Repair or replace harness or connector.**

OK

Replace A/F sensor.

DIB1X–01

CIRCUIT INSPECTION

DTC	P0036	Oxygen Sensor Heater Cointrol Circuit (Bank 1 Sensor 2)

CIRCUIT DESCRIPTION

Refer to DTC P0136 on page DI–64.

HINT:

The ECM provides a pulse width modulated control circuit to adjust current through the heater. The oxygen sensor heater circuit uses a relay on the B+ side of the circuit.

Reference

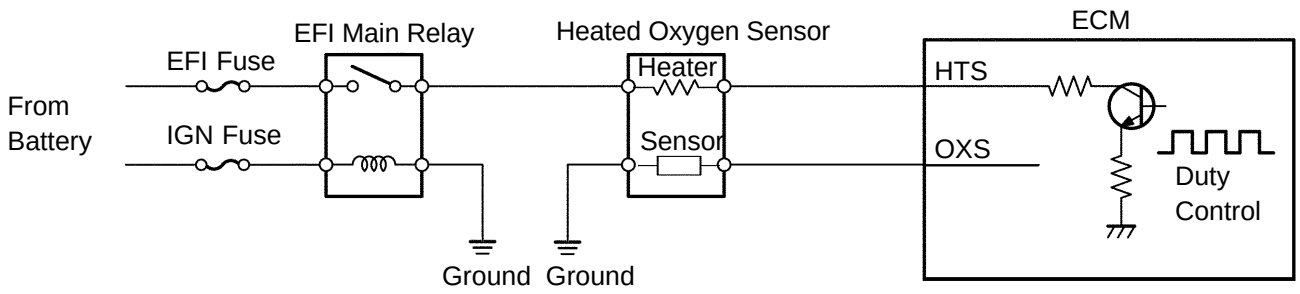

DTC No.	DTC Detection Condition	Trouble Area
P0036	When heater operates, heater current exceeds 2 A	• Open or short in heater circuit of heated oxygen sensor • Heated oxygen sensor heater • EFI main relay • ECM
	Heater current of 0.20 A or less when heater operates	

HINT:

Sensor 2 refers to the sensor farther away from the engine body.

WIRING DIAGRAM

Refer to DTC P0134 on page DI–50.

INSPECTION PROCEDURE

HINT:

Read freeze frame data using the hand–held tester or the OBD II scan tool, as freeze frame data records the engine conditions when a malfunction is detected. When troubleshooting, it is useful for determining whether the vehicle was running or stopped, the engine was warmed up or not, the air–fuel ratio was lean or rich, etc. at the time of the malfunction.

1	Check resistance of heated oxygen sensor heater.

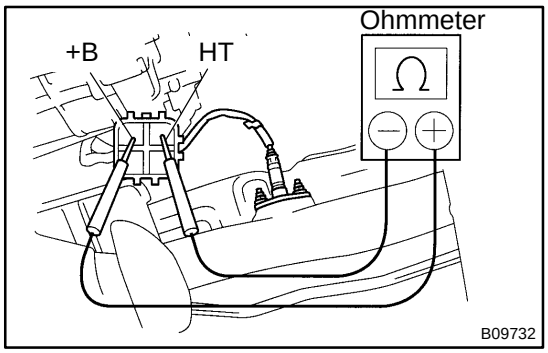

PREPARATION:
Disconnect the sensor connector.
CHECK:
Using an ohmmeter, measure the resistance between terminals +B and HT.
OK:

at 20˚C (68˚F)	11 – 16 Ω
at 800˚C (1,472˚F)	23 – 32 Ω

NG → **Replace heated oxygen sensor.**

OK

2	Check EFI main relay (Marking: EFI).

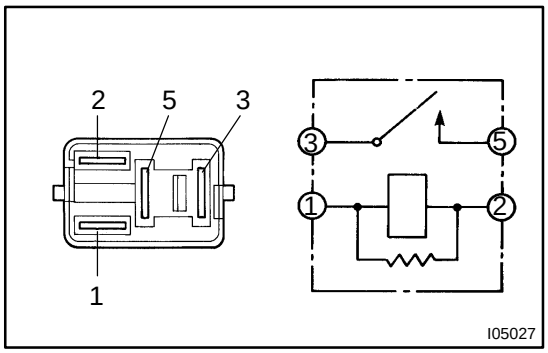

PREPARATION:
Remove the EFI main relay from RB No. 2.
CHECK:
Inspect the EFI main relay.
OK:

Condition	Tester connection	Specified condition
Constant	1 – 2	Continuity
	3 – 5	No continuity
Apply B+ between terminals 1 and 2.	3 – 5	Continuity

NG → **Replace EFI main relay.**

OK

3	Check voltage between terminals HTS of ECM connector and body ground.

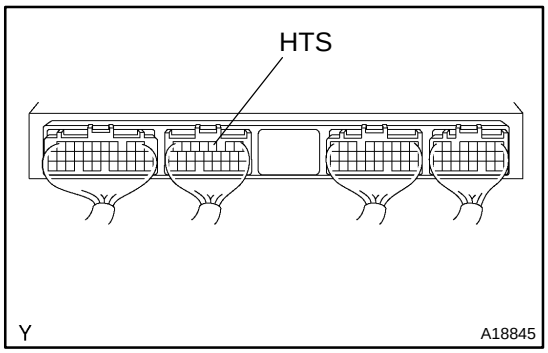

PREPARATION:

(a) Remove the glove compartment (See page SF–55).

(b) Turn the ignition switch ON.

CHECK:

Measure the voltage between terminals HTS of the ECM connector and body ground.

HINT:

Connect terminal HTS to bank 1 sensor 2.

OK:

Voltage: 9 – 14 V

OK	Check and replace ECM (See page IN–28).

NG

Check and repair harness or connector between EFI main relay (Marking: EFI) and heated oxygen sensor, and heated oxygen sensor and ECM (See page IN–28).

DTC	P0100	Mass or Volume Air Flow Circuit

CIRCUIT DESCRIPTION

The mass air flow meter uses a platinum hot wire. The hot wire air flow meter consists of a platinum hot wire, temperature sensor and a control circuit installed in a plastic housing. The hot wire air flow meter works in principle that the hot wire and temperature sensor located in the intake air bypass of the housing detect any changes in the intake air temperature.

The hot wire is maintained at the set tempreature by controlling the current flow through the hot wire. This current flow is then measured as the output voltage of the air flow meter.

The circuit is constructed so that the platinum hot wire and temperature sensor can provide a bridge circuit with the power transistor, and controlled so that the potential of A and B can remain equal in order to maintain the set temperature.

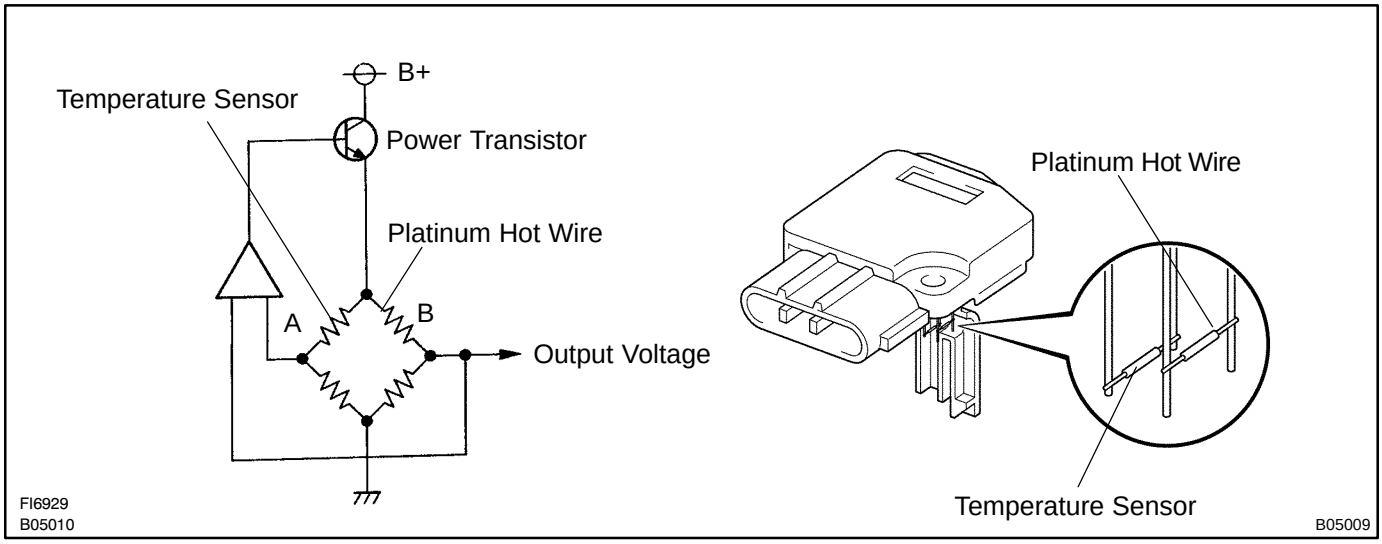

DTC No.	DTC Detection Condition	Trouble Area
P0100	Open or short in mass air flow meter circuit with more than 3 sec. engine speed 4,000 rpm or less	• Open or short in mass air flow meter circuit • Mass air flow meter • ECM

HINT:

After confirming DTC P0100, use the hand–held tester or OBD II scan tool to confirm the mass air flow ratio from the ”DIAGNOSIS/ENHANCED OBD II/DATA LIST/ALL”.

Mass Air Flow Value (g/s)	Malfunction
Approx. 0	• Mass air flow meter power source circuit open • VG circuit open or short
202.2 or more	• EVG circuit open

WIRING DIAGRAM

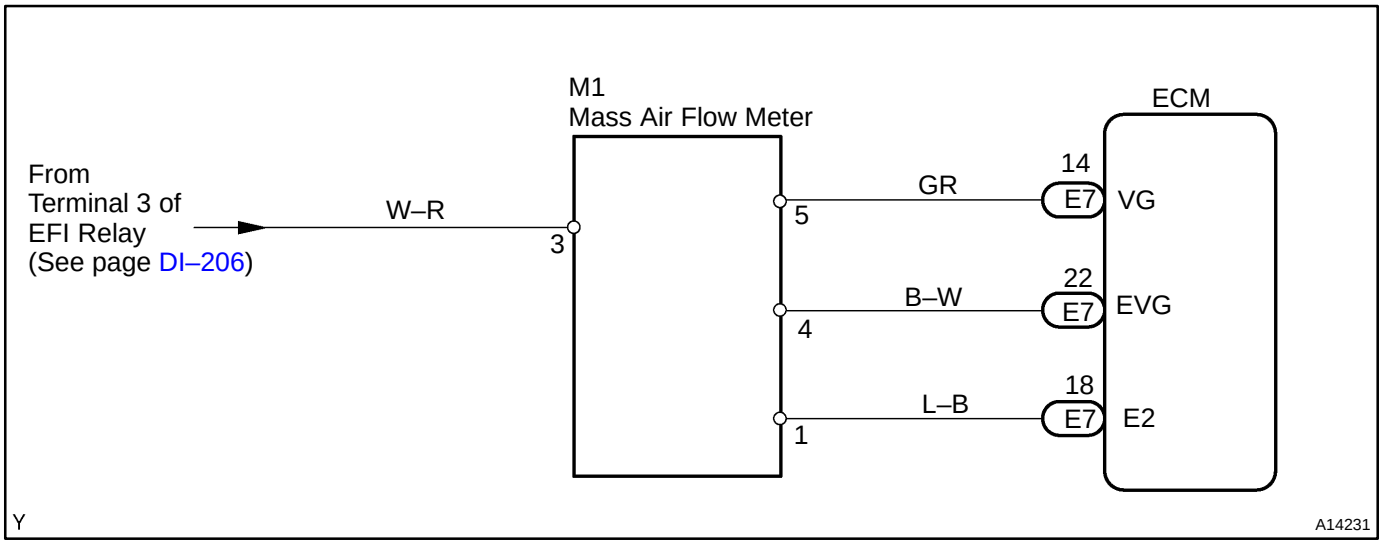

INSPECTION PROCEDURE

HINT:

Read freeze frame data using the hand–held tester or the OBD II scan tool, as freeze frame data records the engine conditions when a malfunction is detected. When troubleshooting, it is useful for determining whether the vehicle was running or stopped, the engine was warmed up or not, the air–fuel ratio was lean or rich, etc. at the time of the malfunction.

1	**Connect hand–held tester or OBD II scan tool, and read value of mass air flow rate.**

PREPARATION:

(a) Connect the OBD II scan tool or the hand–held tester to the DLC3.
(b) Turn the ignition switch ON and push the hand–held tester or the OBD II scan tool main switch ON.
(c) Start the engine.
(d) Select the item ”DIAGNOSIS/ENHANCED OBD II/DATA LIST/ALL/MAF”.

CHECK:

Read the mass air flow rate on the hand–held tester or the OBD II scan tool.

RESULT:

Mass Air Flow Rate (g/s)	Proceed to
0.0	Type I
1 ≦ Mass Air Flow Rate ≦ 202.1 or more (*1)	Type II
202.2 gm/sec. or more	Type III

*1: Read the mass air flow rate on the OBD II scan tool or the hand–held tester.

Type II → **Check intermittent problems (See page DI–3).**

Type II → **Go to step 5.**

Type I

2	Check voltage of mass air flow meter power source.

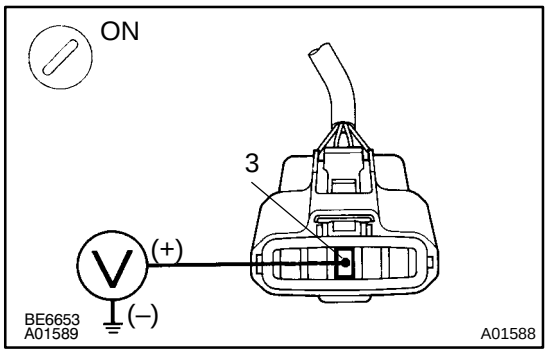

PREPARATION:

(a) Disconnect the mass air flow meter connector.

(b) Turn the ignition switch ON.

CHECK:

Measure the voltage between terminal 3 of the mass air flow meter connector and the body ground.

OK:

Voltage: 9 – 14 V

NG	Check for open in harness and connector between EFI main relay (Marking: EFI) and mass air flow meter (See page IN–28).

OK

3	Check voltage between terminal VG of ECM connector and body ground.

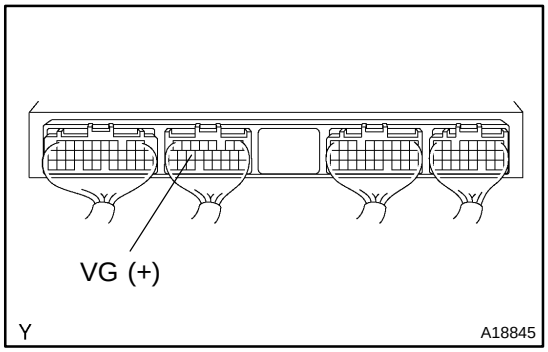

PREPARATION:

(a) Remove the glove compartment (See page SF–55).

(b) Start the engine.

CHECK:

Measure the voltage between terminal VG of the ECM connector and the body ground while the engine is idling.

OK:

Voltage:

1.1 – 1.5 V (P or N position and A/C switch OFF)

OK	Check and replace ECM (See page IN–28).

NG

4	**Check for open and short in harness and connector between mass air flow meter and ECM (See page IN–28).**

NG → **Repair or replace harness or connector.**

OK

Replace mass air flow meter.

5	**Check continuity between terminal EVG of ECM connector and body ground.**

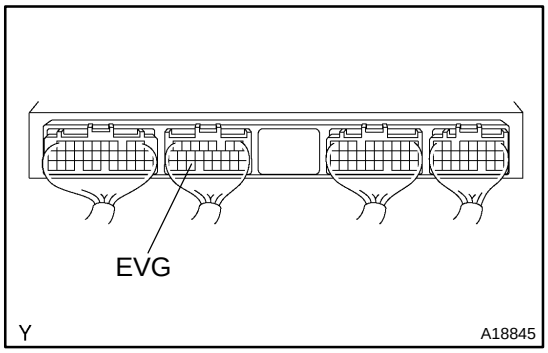

PREPARATION:
Remove the glove compartment (See page SF–55).
CHECK:
Check the continuity between terminal EVG of the ECM connector and the body ground.
OK:
Continuity (1 Ω or less)

NG → **Check and replace ECM (See page IN–28).**

OK

6	**Check for open in harness and connector between mass air flow meter and ECM (See page IN–28).**

NG → **Repair or replace harness or connector.**

OK

Replace mass air flow meter.

DTC	P0101	Mass or Volume Air Flow Circuit Range/Performance Problem

CIRCUIT DESCRIPTION

Refer to DTC P0100 on page DI–28.

DTC No.	DTC Detection Condition	Trouble Area
P0101	After engine is warmed up, conditions (a), (b) and (c) continue with more than 10 sec. engine speed 900 rpm or less: (2 trip detection logic) (a) Throttle valve fully closed (b) Mass air flow meter output > 2.2 V (c) THW ≧ 70°C	• Mass air flow meter
	Conditions (a) and (b) continue with more than 10 sec. engine speed 1,850 rpm or more: (2 trip detection logic) (a) VTA ≧ 0.1 V (b) Mass air flow meter output < 0.25 V	

INSPECTION PROCEDURE

HINT:

Read freeze frame data using the hand–held tester or the OBD II scan tool as freeze frame data records the engine conditions when a malfunction is detected. When troubleshooting, it is useful for determining whether the vehicle was running or stopped, the engine was warmed up or not, the air–fuel ratio was lean or rich, etc. at the time of the malfunction.

1	Are there any other codes (besides DTC P0101) being output?

YES → Go to relevant DTC chart (See page DI–16).

NO →

Replace mass air flow meter.

DI12I–13

DTC	P0110	Intake Air Temperature Circuit Malfunction

CIRCUIT DESCRIPTION

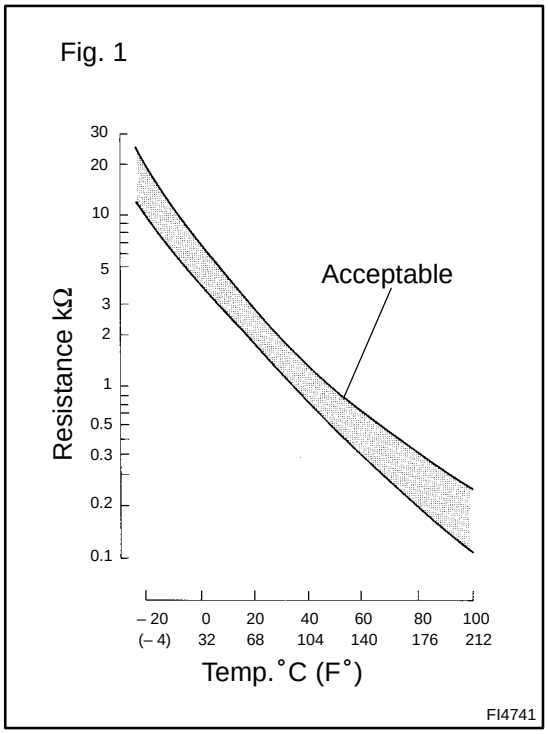

The intake air temperature sensor is built into mass air flow meter and senses the intake air temperature.
A thermistor built in the sensor changes the resistance value according to the intake air temperature. The lower the intake air temperature, the greater the thermistor resistance value, and the higher the intake air temperature, the lower the thermistor resistance value (See Fig. 1).
The intake air temperature sensor is connected to the ECM (See below). The 5 V power source voltage in the ECM is applied to the intake air temperature sensor from terminal THA via a resistor R.
That is, resistor R and the intake air temperature sensor are connected in series. When the resistance value of the intake air temperature sensor changes in accordance with changes in the intake air temperature, the potential at terminal THA also changes. Based on this signal, the ECM increases the fuel injection volume to improve driveability during cold engine operation.

DTC No.	DTC Detection Condition	Trouble Area
P0110	Open or short in intake air temp. sensor circuit	• Open or short in intake air temp. sensor circuit • Intake air temp. sensor (built into mass air flow meter) • ECM

HINT:
After confirming DTC P110, use the hand–held tester or the OBD II scan tool to confirm the intake air temperature from the ”DIAGNOSIS/ENHANCED OBD II/DATA LIST/ALL”.

Temperature Displayed	Malfunction
–40˚C (–40˚F)	Open circuit
140˚C (284˚F) or more	Short circuit

WIRING DIAGRAM

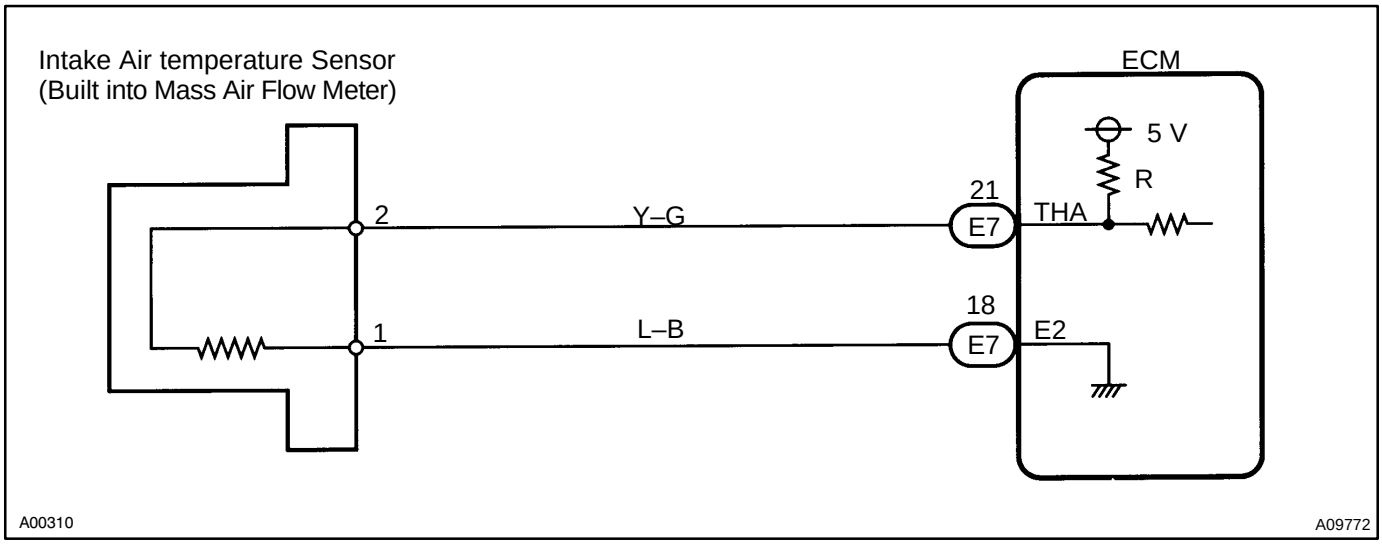

INSPECTION PROCEDURE

HINT:

- If different DTCs that are related to different systems are output simultaneously while terminal E2 is used as a ground terminal, terminal E2 may be open.
- Read freeze frame data using the hand–held tester or the OBD II scan tool, as freeze frame data records the engine conditions when a malfunction is detected. When troubleshooting, it is useful for determining whether the vehicle was running or stopped, the engine was warmed up or not, the air–fuel ratio was lean or rich, etc. at the time of the malfunction.

1	**Connect hand–held tester or OBD II scan tool, and read value of intake air temperature.**

PREPARATION:

(a) Connect the hand–held tester or OBD II scan tool to DLC3.
(b) Turn the ignition switch ON and push the hand–held tester or OBD II scan tool main switch ON.
(c) Select the item ”DIAGNOSIS/ENHANCED OBD II/DATA LIST/ALL/INTAKE AIR”.

CHECK:

Read the temperature value on the hand–held tester or the OBD II scan tool.

OK:

Same value as the actual intake temperature.

HINT:

- If there is open circuit, hand–held tester or OBD II scan tool indicates –40˚C (–40˚F).
- If there is short circuit, hand–held tester or OBD II scan tool indicates 140˚C (284˚F) or more.

NG → **–40˚C (–40˚F) ..... Go to step 2.**
140˚C (284˚F) or more ..... Go to step 4.

OK

Check for intermittent problems
(See page DI–3).

2	Check for open in harness or ECM.

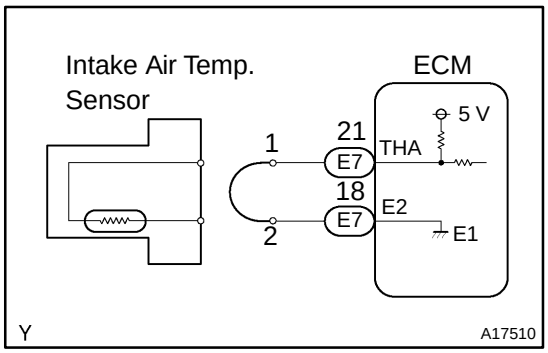

PREPARATION:

(a) Disconnect the mass air flow meter connector.
(b) Connect the sensor wire harness terminals together.
(c) Turn the ignition switch ON.
(d) Select the item ”DIAGNOSIS/ENHANCED OBD II/DATA LIST/ALL/INTAKE AIR”.

CHECK:

Read the temperature value on the hand–held tester or the OBD II scan tool.

OK:

Temperature value: 140˚C (284˚F) or more

OK	Confirm good connection at sensor. If OK, replace mass air flow meter.

NG

3	Check for open in harness or ECM.

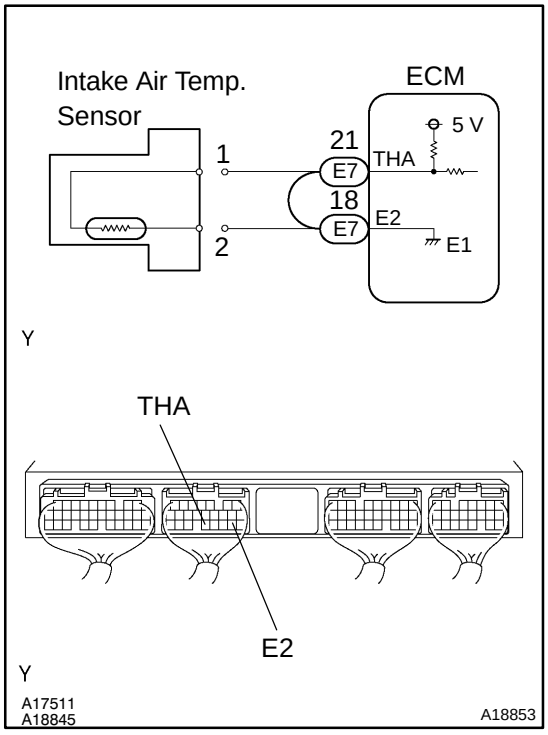

PREPARATION:

(a) Disconnect the mass air flow meter connector.
(b) Remove the glove compartment (See page SF–55).
(c) Connect between terminals THA and E2 of the ECM connector.

HINT:

The mass air flow meter connector is disconnected. Before checking, do a visual and contact pressure check for the ECM connector (See page IN–28).

(d) Turn the ignition switch ON.
(e) Select the item ”DIAGNOSIS/ENHANCED OBD II/DATA LIST/ALL/INTAKE AIR”.

CHECK:

Read the temperature value on the hand–held tester or the OBD II scan tool.

OK:

Temperature value: 140˚C (284˚F) or more

OK	Open in harness between terminal E2 or THA, repair or replace harness.

NG

Confirm good connection at ECM. If OK, replace ECM.

4	**Check for short in harness and ECM.**

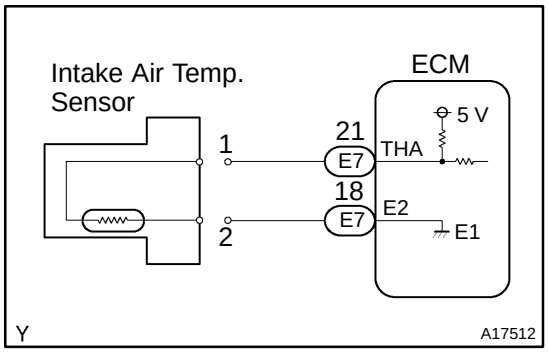

PREPARATION:

(a) Disconnect the mass air flow meter connector.
(b) Turn the ignition switch ON.
(c) Select the item ”DIAGNOSIS/ENHANCED OBD II/DATA LIST/ALL/INTAKE AIR”.

CHECK:

Read the temperature value on the hand–held tester or OBD II scan tool.

OK:

Temperature value: –40˚C (–40˚F)

OK	**Replace mass air flow meter.**

NG

5	Check for short in harness or ECM.

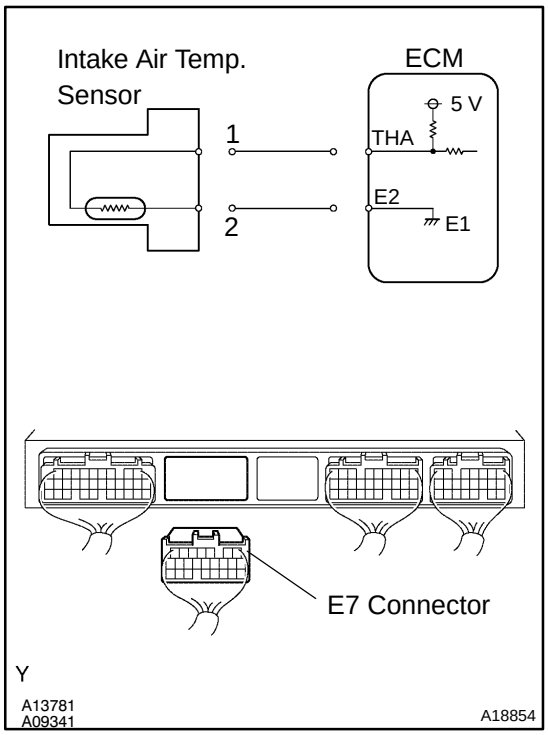

PREPARATION:

(a) Remove the glove compartment (See page SF–55).

(b) Disconnect the E7 ECM connector.

HINT:

The mass air flow meter connector is disconnected.

(c) Turn the ignition switch ON.

(d) Select the item ”DIAGNOSIS/ENHANCED OBD II/DATA LIST/ALL/INTAKE AIR”.

CHECK:

Read the temperature value on the hand–held tester or OBD II scan tool.

OK:

Temperature value: –40°C (–40°F)

OK → **Repair or replace harness or connector.**

NG

Check and replace ECM (See page IN–28).

DI12J–13

DTC	P0115	Engine Coolant Temperature Circuit

CIRCUIT DESCRIPTION

A thermistor built into the engine coolant temperature sensor changes the resistance value according to the engine coolant temperature.

The structure of the sensor and connection to the ECM is the same as in the DTC P0110 shown on page DI–33.

DTC No.	DTC Detection Condition	Trouble Area
P0115	Open or short in engine coolant temp. sensor circuit	• Open or short in engine coolant temp. sensor circuit • Engine coolant temp. sensor • ECM

HINT:

After confirming DTC P0115, use the hand–held tester or the OBD II scan tool to confirm the engine coolant temperature from the ”DIAGNOSIS/ENHANCED OBD II/DATA LIST/ALL”.

Temperature Displayed	Malfunction
–40˚C (–40˚F)	Open circuit
140˚C (284˚F) or more	Short circuit

WIRING DIAGRAM

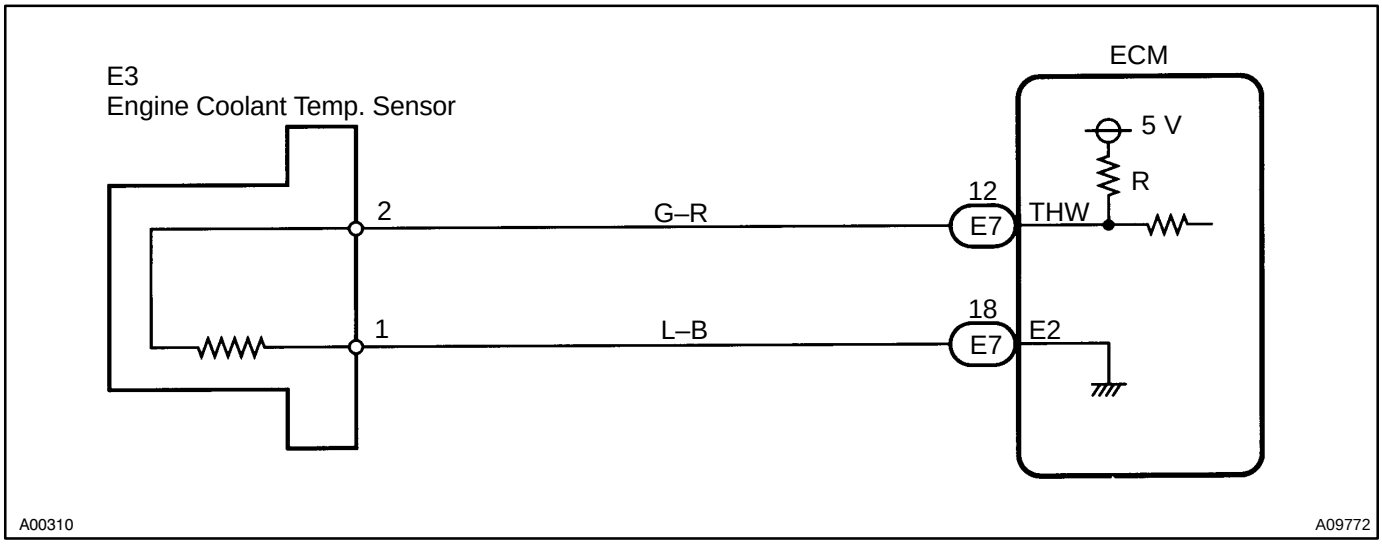

INSPECTION PROCEDURE

HINT:

- If different DTCs that are related to different systems are output simultaneously while terminal E2 is used as a ground terminal, terminal E2 may be open.
- Read freeze frame data using the hand–held tester or the OBD II scan tool, as freeze frame data records the engine conditions when a malfunction is detected. When troubleshooting, it is useful for determining whether the vehicle was running or stopped, the engine was warmed up or not, the air–fuel ratio was lean or rich, etc. at the time of the malfunction.

1	**Connect hand–held tester or OBD II scan tool, and read value of engine coolant temperature.**

PREPARATION:

(a) Connect the hand–held tester or OBD II scan tool to the DLC3.
(b) Turn the ignition switch ON and push the hand–held tester or OBD II scan tool main switch ON.
(c) Select the item ”DIAGNOSIS/ENHANCED OBD II/DATA LIST/ALL/COOLANT TEMP”.

CHECK:

Read the temperature value on the hand–held tester or OBD II scan tool.

OK:

Same as actual engine coolant temperature.

HINT:

- If there is open circuit, hand–held tester or OBD II scan tool indicates –40˚C (–40˚F).
- If there is open circuit, hand–held tester or OBD II scan tool indicates 140˚C (284˚F) or more.

NG	**–40˚C (–40˚F) ..... Go to step 2.** **140˚C (284˚F) or more ..... Go to step 4.**

OK

Check for intermittent problems (See page DI–3).

2	**Check for open in harness or ECM.**

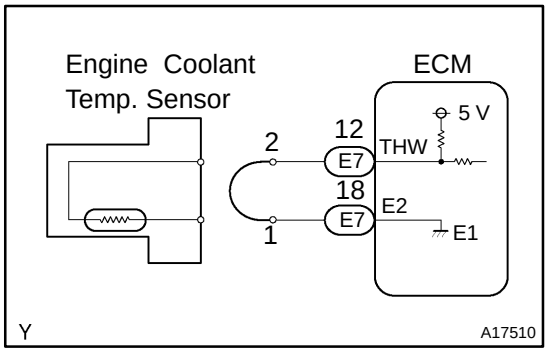

PREPARATION:

(a) Disconnect the engine coolant temperature sensor connector.
(b) Connect the sensor wire harness terminals together.
(c) Turn the ignition switch ON.
(d) Select the item ”DIAGNOSIS/ENHANCED OBD II/DATA LIST/ALL/COOLANT TEMP”.

CHECK:

Read the temperature value on the hand–held tester or OBD II scan tool.

OK:

Temperature value: 140˚C (284˚F) or more

OK	**Confirm good connection at sensor. If OK, replace engine coolant temperature sensor.**

NG

3	Check for open in harness or ECM.

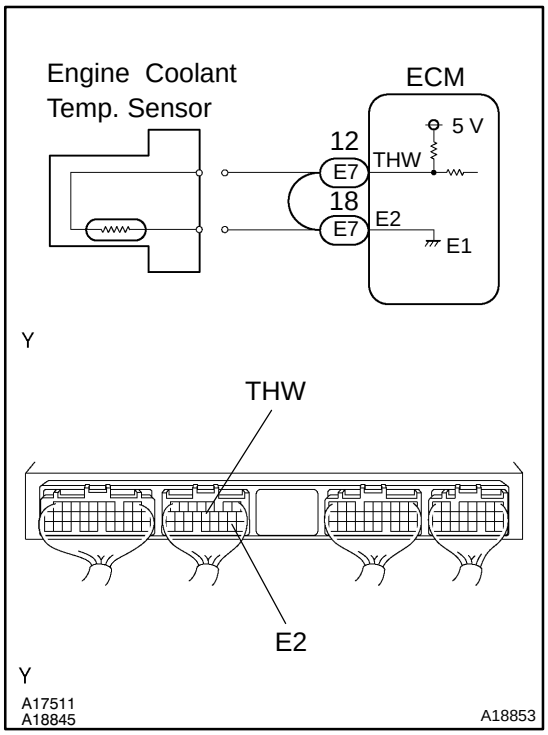

PREPARATION:

(a) Disconnect the engine coolant temperature sensor connector.
(b) Remove the glove compartment (See page SF–55).
(c) Connect between terminals THW and E2 of the ECM connector.

HINT:

The engine coolant temperature sensor connector is disconnected. Before checking, do a visual and contact pressure check for the ECM connector (See page IN–28).

(d) Turn the ignition switch ON.
(e) Select the item "DIAGNOSIS/ENHANCED OBD II/DATA LIST/ALL/COOLANT TEMP".

CHECK:

Read the temperature value on the hand–held tester or OBD II scan tool.

OK:

Temperature value: 140°C (284°F) or more

OK	Open in harness between terminal E2 or THW, repair or replace harness.

NG

Confirm good connection at ECM. If OK, replace ECM.

4	Check for open in harness or ECM.

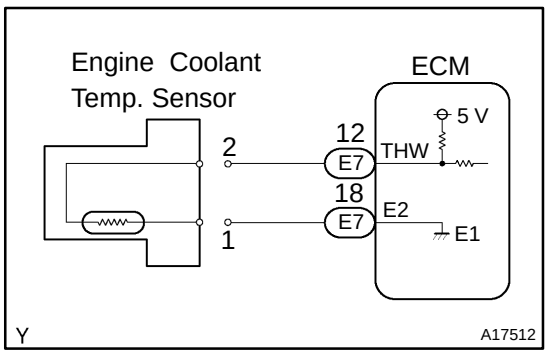

PREPARATION:

(a) Disconnect the engine coolant temperature sensor connector.
(b) Turn the ignition switch ON.
(c) Select the item "DIAGNOSIS/ENHANCED OBD II/DATA LIST/ALL/COOLANT TEMP".

CHECK:

Read the temperature value on the hand–held tester or OBD II scan tool.

OK:

Temperature value: –40°C (–40°F)

OK	Replace engine coolant temperature sensor.

NG

5	Check for short in harness or ECM.

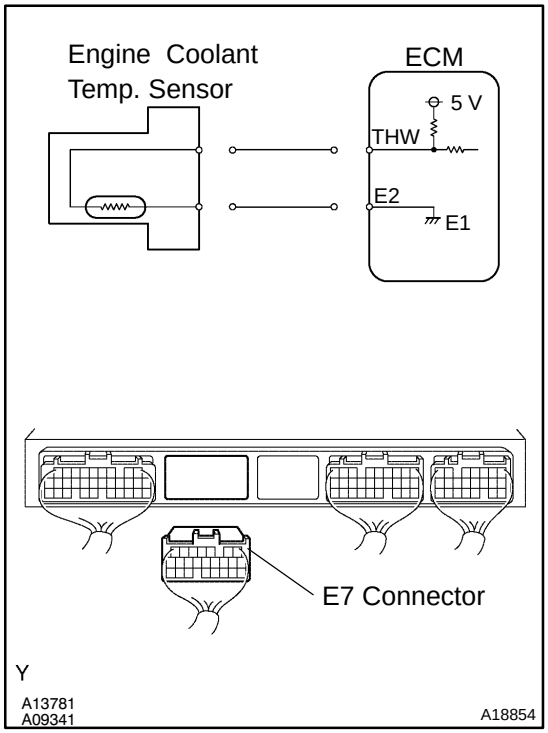

PREPARATION:

(a) Remove the glove compartment (See page SF–55).

(b) Disconnect the E7 ECM.

HINT:

The engine coolant temp. sensor connector is disconnected.

(c) Turn ignition switch ON.

(d) Select the item ”DIAGNOSIS/ENHANCED OBD II/DATA LIST/ALL/COOLANT TEMP”.

CHECK:

Read the temperature value on the hand–held tester or OBD II scan tool.

OK:

Temperature value: –40˚C (–40˚F)

OK	Repair or replace harness or connector.

NG

Check and replace ECM (See page IN–28).

DIB20–01

DTC	P0116	Engine Coolant Temperature Circuit Range/ Performance Problem

DTC	P0125	Insufficient Coolant Temperature for Closed Loop Fuel Control

CIRCUIT DESCRIPTION

Refer to DTC P0115 on page DI–38.

DTC No.	DTC Detection Condition	Trouble Area
P0116	When THW ⍁ 35°C (95°F) and 60°C (140°F), THA ≧ –6.7°C (19.4°F) when starting engine, conditions (a) and (b) continue (2 trip detection logic) (a) Vehicle speed is changing (Not stable) (b) Water temp. change is lower than 3°C (5.4°F) from water temp. since when starting engine	• Cooling system • Engine coolant temp. sensor
	In case that reading value of water temp. sensor will not change more than 1°C (1.8°F) even after repeating 6 trips (detection logic) of adjusting speed pattern with THW more than 60°C (140°F) when starting engine	
P0125	If THW < –6.7°C (19.4°F) or THA < –6.7°C (19.4°F) 20 min. or more after starting engine, engine coolant temp. sensor value is 15°C (59°F) or less (2 trip detection logic)	
	If THW ⍁ –6.7°C (19.4°F) and THA ≧ –6.7°C (19.4°F) and 10°C (50°F) at engine start, 5 min. or more after starting engine, engine coolant temp. sensor value is 30°C (86°F) or less (2 trip detection logic)	
	If THW ≧ 10°C (50°F) and THA ≧ 10°C (50°F) at engine start, 2 min. or more after starting engine, engine coolant temp. sensor value is 20°C (68°F) or less (2 trip detection logic)	

INSPECTION PROCEDURE

HINT:

- If DTCs P0115 and P0116 are output simultaneously, engine coolant temp. sensor circuit may be open. Perform troubleshooting of DTC P0115 first.
- Read freeze frame data using the hand–held tester or the OBD II scan tool, as freeze frame data records the engine conditions when a malfunction is detected. When troubleshooting, it is useful for determining whether the vehicle was running or stopped, the engine was warmed up or not, the air–fuel ratio was lean or rich, etc. at the time of the malfunction.

1	Are there any other codes (besides DTC P0116 and P0125) being output?

YES → Go to relevant DTC chart (See page DI–16).

NO

2	Check thermostat (See page CO–11).

NG → Replace thermostat (See page CO–9).

OK →

Replace engine coolant temperature sensor.

DTC	P0120	Throttle Pedal Position Sensor/Switch ”A” Circuit

CIRCUIT DESCRIPTION

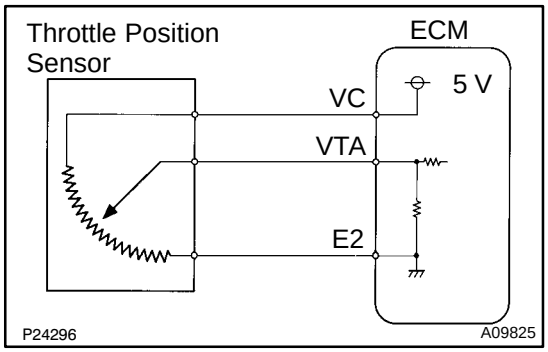

The throttle position sensor is mounted in the throttle body and detects the throttle valve opening angle.
When the throttle valve is fully closed, a voltage of approximately 0.3 – 0.8 V is applied to terminal VTA of the ECM. The voltage applied to the terminals VTA of the ECM increases in proportion to the opening angle of the throttle valve and becomes approximately 3.2 – 4.9 V when the throttle valve is fully opened. The ECM judges the vehicle driving conditions from these signals input from terminal VTA, uses it as one of the conditions to decide the air–fuel ratio correction, power increase correction and fuel–cut control etc.

DTC No.	DTC Detection Condition	Trouble Area
P0120	Condition (a) or (b) continues with more than 5 sec.: (a) VTA < 0.1 V (b) VTA > 4.9 V	• Open or short in throttle position sensor circuit • Throttle position sensor • ECM

HINT:
After confirming DTC P0120, use the hand–held tester or OBD II scan tool to confirm the throttle valve opening percentage and closed throttle position switch condition.

Throttle valve opening position expressed as percentage		Trouble Area
Throttle valve fully closed	Throttle valve fully open	
0 %	0 %	• VC circuit open • VTA circuit open or short
Approx. 100 %	Approx. 100 %	• E2 circuit open

WIRING DIAGRAM

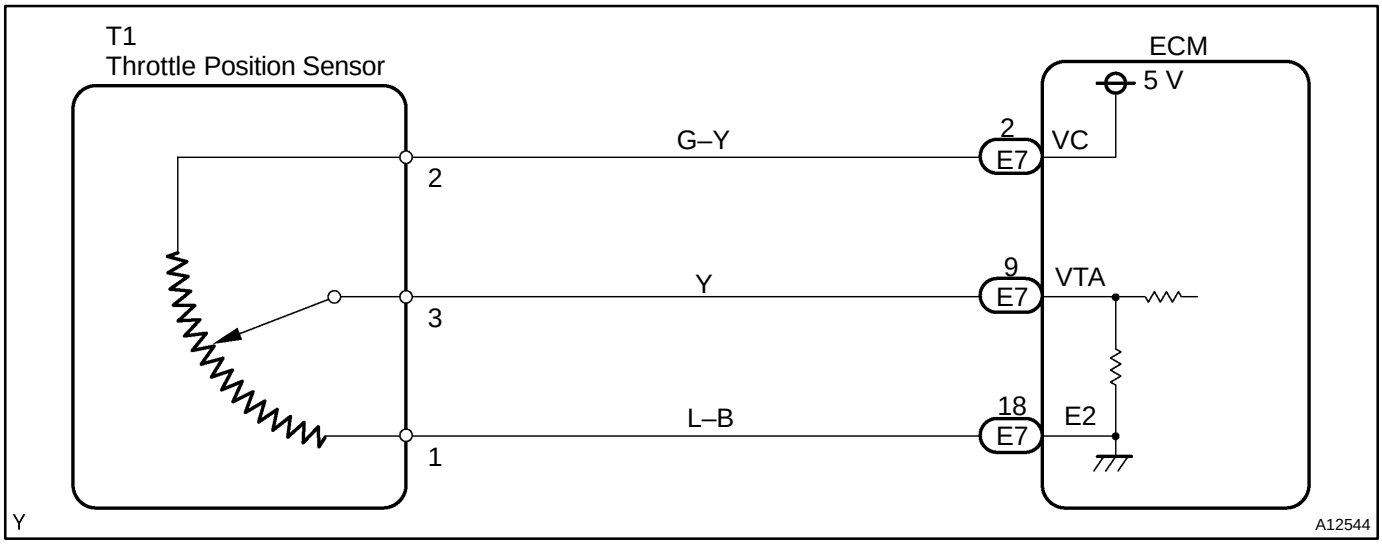

INSPECTION PROCEDURE

HINT:

- If different DTCs that are related to different systems are output simultaneously while terminal E2 is used as a ground terminal, terminal E2 may be open.
- Read freeze frame data using the hand–held tester or the OBD II scan tool, as freeze frame data records the engine conditions when a malfunction is detected. When troubleshooting, it is useful for determining whether the vehicle was running or stopped, the engine was warmed up or not, the air–fuel ratio was lean or rich, etc. at the time of the malfunction.

1	**Connect hand–held tester or OBD II scan tool, and read throttle valve opening percentage.**

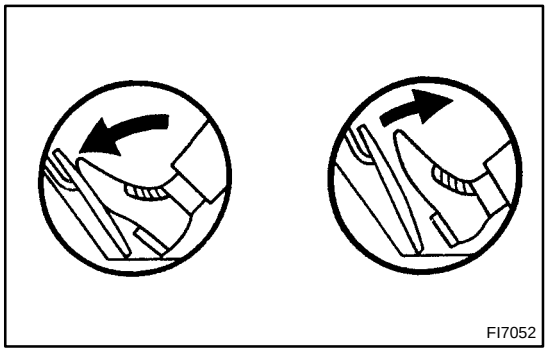

PREPARATION:

(a) Connect the hand–held tester or OBD II scan tool to DLC3.

(b) Turn the ignition switch ON and push the hand–held tester or OBD II scan tool main switch ON.

CHECK:

Read the throttle valve opening percentage.

OK:

Throttle valve	Throttle valve opening position expressed as percentage
Fully open	Approx. 75 %
Fully closed	Approx. 10 %

OK	**Check for intermittent problems (See page DI–3).**

NG

2	**Check voltage between terminal 2 of throttle position sensor connector and body ground.**

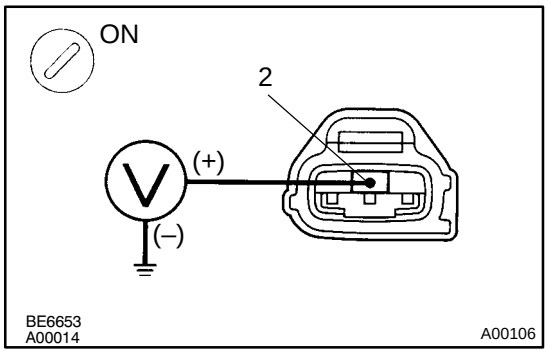

PREPARATION:

(a) Disconnect the throttle position sensor connector.

(b) Turn the ignition switch ON.

CHECK:

Measure the voltage between terminal 2 of the throttle position sensor connector and the body ground.

OK:

Voltage: 4.5 – 5.5 V

NG	**Go to step 5.**

OK

3	**Check throttle position sensor (See page SF–31).**

NG → **Replace throttle position sensor (See page SF–29).**

OK

4	**Check voltage between terminals VTA and E2 of ECM connector.**

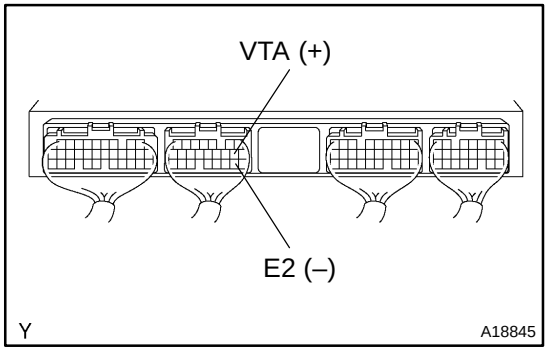

PREPARATION:

(a) Remove the glove compartment (See page SF–55).

(b) Turn the ignition switch ON.

CHECK:

Measure the voltage between terminals VTA and E2 of the ECM connector.

OK:

Throttle Valve	Voltage
Fully closed	0.3 – 0.8 V
Fully open	3.2 – 4.9 V

NG → **Check for open and short in harness and connector between ECM and throttle position sensor in VTA circuit (See page IN–28).**

OK

Check and replace ECM (See page IN–28).

5	Check voltage between terminals VC and E2 of ECM connector.

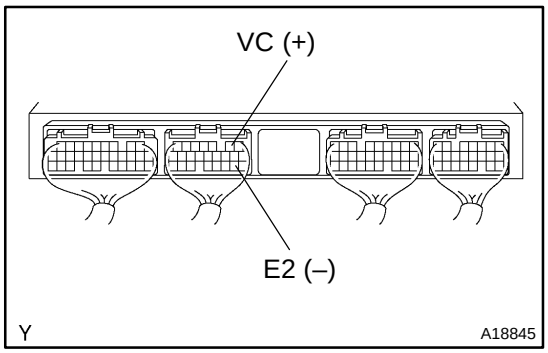

PREPARATION:

(a) Remove the glove compartment (See page SF–55).

(b) Turn the ignition switch ON.

CHECK:

Measure the voltage between terminals VC and E2 of the ECM connector.

OK:

Voltage: 4.5 – 5.5 V

NG → **Check and replace ECM (See page IN–28).**

OK

Check for open in harness and connector in VC circuit between ECM throttle position and sensor (See page IN–28).

DI12M–14

DTC	P0121	Throttle Pedal Position Sensor/Switch ”A” Circuit Range/Performance Problem

CIRCUIT DESCRIPTION

Refer to DTC P0120 on page DI–44.

HINT:

This is the procedure of throttle position sensor.

DTC No.	DTC Detection Condition	Trouble Area
P0121	While vehicle speed drops from 30 km/h (19 mph) or more to 0 km/h (0 mph), output value of throttle position sensor is out of applicable range (2 trip detection logic)	• Throttle position sensor

INSPECTION PROCEDURE

HINT:

Read freeze frame data using the hand–held tester or the OBD II scan tool, as freeze frame data records the engine conditions when a malfunction is detected. When troubleshooting, it is useful for determining whether the vehicle was running or stopped, the engine was warmed up or not, the air–fuel ratio was lean or rich, etc. at the time of the malfunction.

1	Are there any other codes (besides DTC P0121) being output?

YES → Go to relevant DTC chart (See page DI–16).

NO →

Replace throttle position sensor.

DI9K6–05

DTC	P0128	Coolant Thermostat (Coolant Temperature Below Thermostat Regulating Temperature)

CIRCUIT DESCRIPTION

HINT:

This is the troubleshooting procedure of thermostat.

If the engine coolant temperature does not reach 75˚C (167˚F)even after warming up, it is abnormal.

DTC No.	DTC Detection Condition	Trouble Area
P0128	Conditions (a), (b) and (c): (a) Cold start (b) After engine is warmed up (c) Engine coolant temp. < 75˚C (167˚F)	• Thermostat • Cooling system • Engine coolant temp. sensor • ECM

INSPECTION PROCEDURE

HINT:

Read freeze frame data using the hand–held tester or the OBD II scan tool, as freeze frame data records the engine conditions when a malfunction is detected. When troubleshooting, it is useful for determining whether the vehicle was running or stopped, the engine was warmed up or not, the air–fuel ratio was lean or rich, etc. at the time of the malfunction.

1	**Check thermostat (See page CO–11).**

NG → **Replace thermostat (See page CO–9).**

OK

2	**Are there any other codes (besides DTC P0128) being output?**

YES → **Go to relevant DTC chart (See page DI–16).**

NO

Check and replace ECM (See page IN–28).

DIB24–01

DTC	P0134	Oxygen (A/F) Sensor Circuit No Activity Detected (Bank 1 Sensor 1)

CIRCUIT DESCRIPTION

Refer to DTC P2195 on page DI–185.
HINT:
This DTC is related to A/F sensor, although the caption is oxygen sensor.

DTC No.	DTC Detection Condition	Trouble Area
P0134	After engine is warmed up, A/F sensor output* does not change when conditions (a), (b), (c) and (d) continue for at least 1.5 min.: *: Output value changes at inside of ECM only (a) Engine speed: 1,500 rpm or more (b) Vehicle speed: 40 – 130 km/h (25 – 81 mph) (c) Throttle valve is not fully closed (d) After starting engine ≧ 140 sec.	• Open or short in A/F sensor (bank 1 sensor 1) circuit • A/F sensor (bank 1 sensor 1) • A/F sensor heater • EFI main relay • A/F sensor heater and relay circuit • Air induction system • Fuel pressure • Injector • Gas leak in exhaust system • PCV hose connection • PCV valve and hose • ECM

HINT:

- Sensor 1 refers to the sensor closest to the engine body.
- Sensor 2 refers to the sensor farthest from the engine body.
- After confirming DTC P0134, use the OBD II scan tool or the hand−held tester to confirm output voltage of the A/F sensor (bank 1 sensor 1) from the ”DIAGNOSIS/ENHANCED OBD II/DATA LIST/ALL”.
- The ECM controls the voltage of AF1+ and AF1– terminals of the ECM to the fixed voltage. Therefore it is impossible to confirm the A/F sensor output voltage without the OBD II scan tool or the hand–held tester.
- OBD II scan tool (excluding hand–held tester) displays the one fifth of the A/F sensor output voltage which is displayed on the hand–held tester.

WIRING DIAGRAM

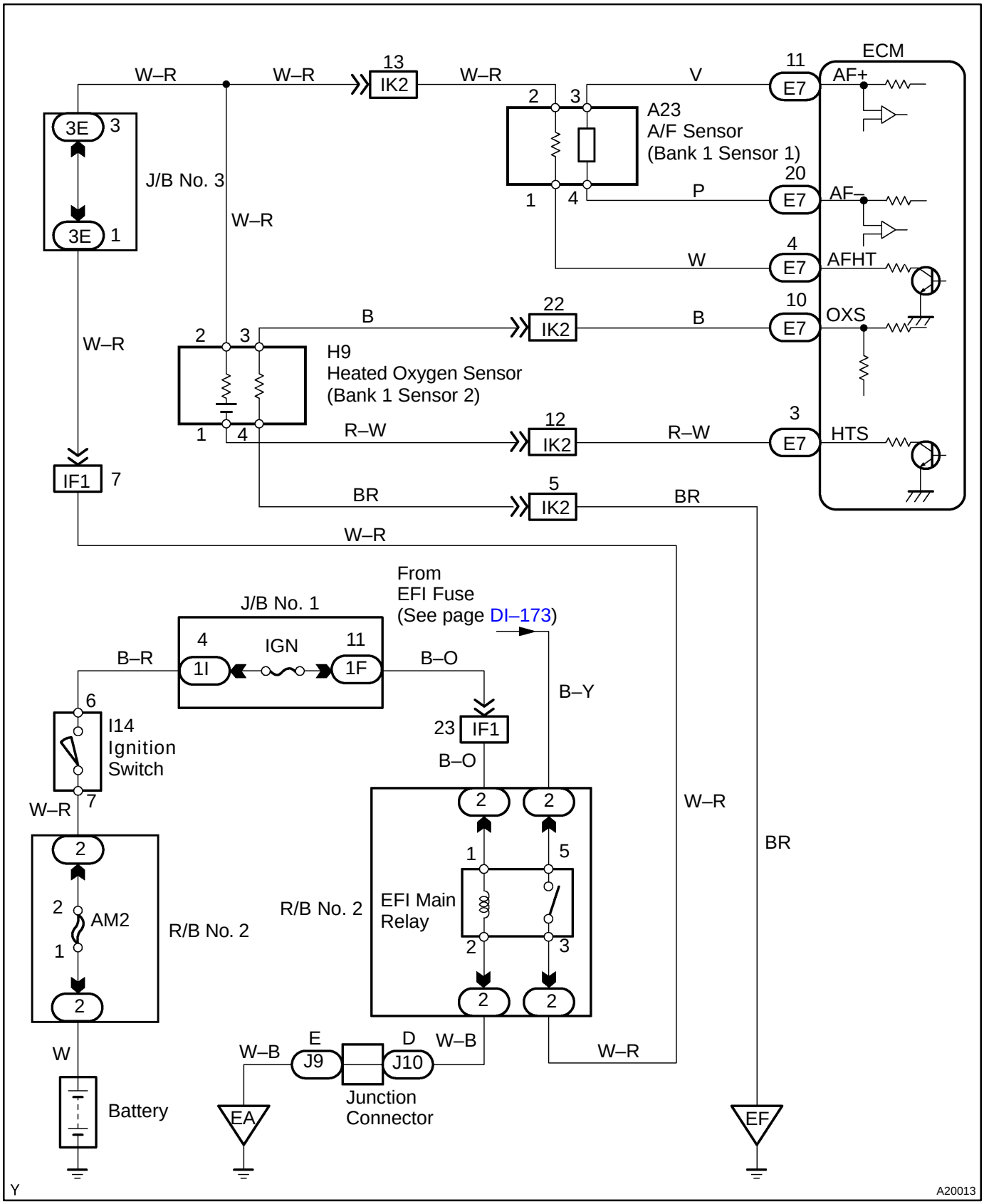

CONFIRMATION DRIVING PATTERN

Refer to DTC P2195 on page DI–185.

INSPECTION PROCEDURE

HINT:

Hand–held tester only:

The narrowing down the trouble area is possible by performing ACTIVE TEST of the following ”A/F CONTROL” (A/F sensor, heated oxygen sensor or another can be distinguished).

Perform ACTIVE TEST by hand–held tester (A/F CONTROL).

HINT:

”A/F CONTROL” is an ACTIVE TEST which change the injection volume to –12.5 % or +25 %.

(1) Connect the hand–held tester to the DLC3 on the vehicle.
(2) Turn the ignition switch ON.
(3) Warm up the engine with the engine speed at 2,500 rpm for approx. 90 sec.
(4) Select the item ”DIAGNOSIS/ENHANCED OBD II/ACTIVE TEST/ A/F CONTROL”.
(5) Perform ”A/F CONTROL” when idle condition (press the ← or → button).

Result:

A/F sensor reacts in synchronizing with increase and decrease of injection volume (+25 % → rich output: Less than 3.0 V, –12.5 % → lean output: More than 3.35 V)

Heated oxygen sensor reacts in synchronizing with increase and decrease of injection volume (+25 % → rich output: More than 0.55 V, –12.5 % → lean output: Less than 0.4 V)

NOTICE:

However, there is a few second delay in the A/F sensor output. And there is about 20 seconds delay in the heated oxygen sensor.

	Output voltage of A/F sensor (sensor 1)	Output voltage of heated oxygen sensor (sensor 2)	Mainly suspect trouble area
Case 1	Injection volume +25 % –12.5 % 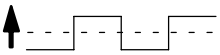 Output voltage More than 3.35 V Less than 3.0 V 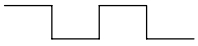 **OK**	Injection volume +25 % –12.5 % 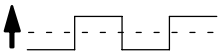 Output voltage More than 0.55 V Less than 0.4 V 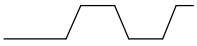 **OK**	—
Case 2	Injection volume +25 % –12.5 % 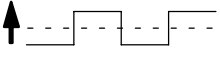 Output voltage No reaction **NG**	Injection volume +25 % –12.5 % 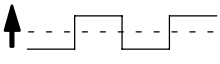 Output voltage More than 0.55 V Less than 0.4 V 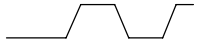 **OK**	A/F sensor (A/F sensor, heater, A/F sensor circuit)
Case 3	Injection volume +25 % –12.5 % 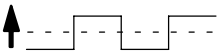 Output voltage More than 3.35 V Less than 3.0 V  **OK**	Injection volume +25 % –12.5 % 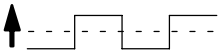 Output voltage No reaction **NG**	Heated oxygen sensor (heated oxygen sensor, heater, heated oxygen sensor circuit)
Case 4	Injection volume +25 % –12.5 % 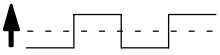 Output voltage No reaction **NG**	Injection volume +25 % –12.5 % 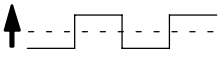 Output voltage No reaction **NG**	Extremely rich or lean of the actual air–fuel ratio (Injector, fuel pressure, gas leakage in exhaust system, etc)

The following procedure of A/F CONTROL enable that to check its output (show its graph indication) of A/F sensor and heated oxygen sensor.
To display the graph indication. Select and push the ”YES or NO” button 2 data ”AFS B1S1 and O2S B1S2” or ”AFS B2S1 and O2S B2S2” and press button ”4” after selecting ”ACTIVE TEST/ A/F CONTROL/USER DATA”.
HINT:

- If the vehicle runs out of fuel, the air–fuel ratio is LEAN and DTC P0134 is recorded. The MIL then comes on.
- A low A/F sensor voltage could be caused by a rich air fuel mixture. Check for conditions that would cause the engine to run rich.
- A high A/F sensor voltage could be caused by a lean air fuel mixture. Check for conditions that would cause the engine to run lean.
- Read freeze frame data using the hand–held tester or the OBD II scan tool, as freeze frame data records the engine conditions when a malfunction is detected. When troubleshooting, it is useful for determining whether the vehicle was running or stopped, the engine was warmed up or not, the air–fuel ratio was lean or rich, etc. at the time of the malfunction.

1	**Are there any other codes (besides DTC P0134) being output?**

YES → **Go to relevant DTC chart (See page DI–16)**

NO

2	**Connect OBD II scan tool or Hand–held tester, and read value for voltage output of A/F sensor (bank 1 sensor 1).**

PREPARATION:

(a) Connect the hand–held tester or the OBD II scan tool to the DLC 3.
(b) Warm up the A/F sensor (bank 1 sensor 1) with the engine at 2,500 rpm for approximately 90 seconds.
(c) Read A/F sensor voltage on the OBD II scan tool or hand–held tester.

CHECK:

(a) Hand–held tester only:
Select the ”DIAGNOSIS/ENHANCED OBD II/SNAPSHOT/MANUAL SNAPSHOT/USER DATA” mode on the hand–held tester.
(b) Select ”AFS B1 S1/ENGINE SPD” and press button ”YES”.
(c) Monitor the A/F sensor voltage carefully.
(d) Check the A/F sensor voltage under the condition as follows.
(1) Allow engine to idle for 30 seconds.
(2) Engine is racing at approx. 2,500 rpm (when engine revolution is not suddenly changed).
(3) Raise the engine speed to 4,000 rpm and release the accelerator pedal fully closed quickly.

OK:

Standard:
Condition (1) and (2)
Voltage change a little in the vicinity of 3.3 V (0.66 V)* (between approx. 3.1 – 3.5 V) as shown in the illustration.
Condition (3)
A/F ratio sensor voltage increase to 3.8 V (0.76 V)* or more during engine deceleration (when fuel cut) as shown in the illustration.

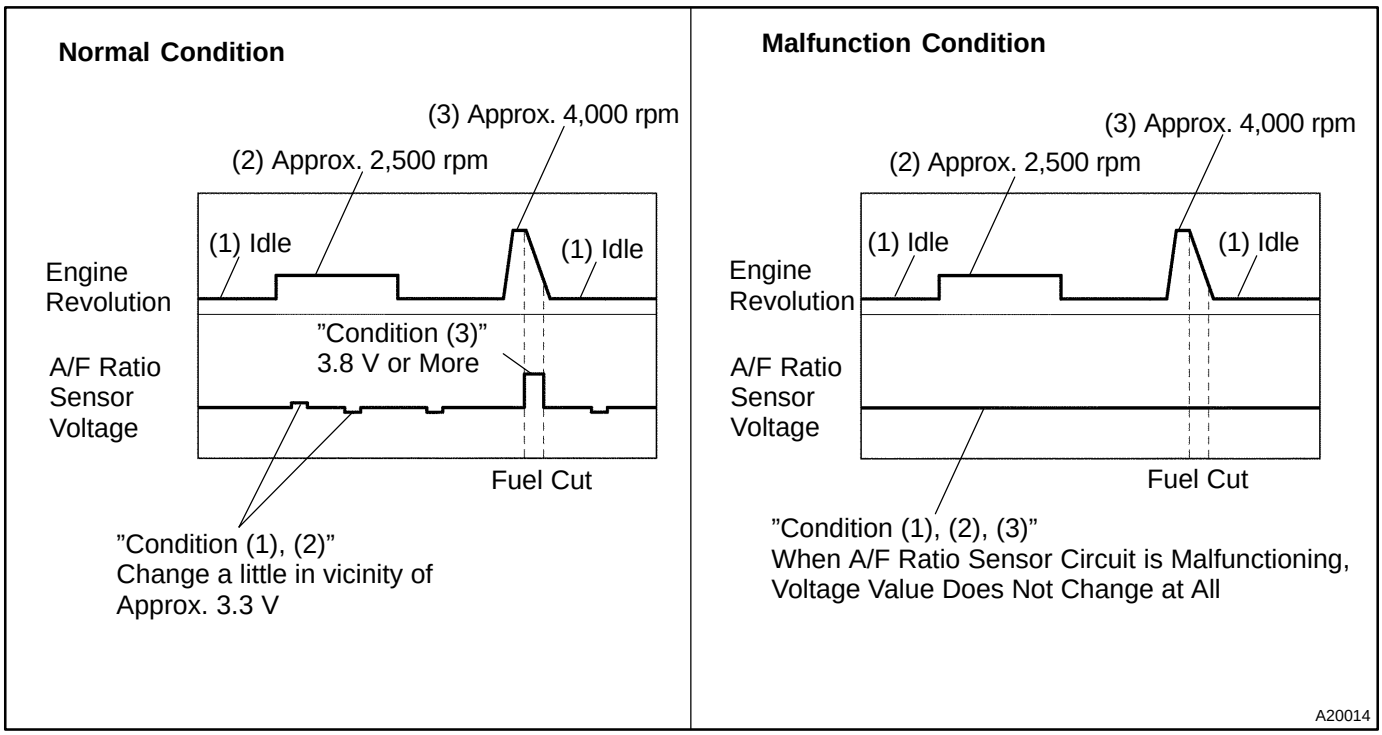

HINT:

- Whenever the output voltage of the A/F sensor remains at approx. 3.3 V (0.660 V)* (see dwg. 2) under any conditions as well as the above conditions, the A/F sensor may have an open–circuit. (This will happen also when the A/F sensor heater has an open–circuit.)
- Whenever the output voltage of the A/F sensor remains at a certain value of approx. 3.8 V (0.76 V)* or more, or 2.8 V (0.56 V)* or less (see dwg. 2) under any conditions as well as the above conditions, the A/F sensor may have a short–circuit.
- The ECM will stop fuel injection (fuel cut) during engine deceleration. This will cause a lean condition and should result in a momentary increase in A/F ratio sensor voltage.
- The ECM must establish a closed throttle position learned value to perform fuel cut. If the battery terminal has been disconnected, the vehicle must be driven over 10 mph to allow the ECM to relearn the closed throttle position.
- When the vehicle is driven:
  In the case that the output voltage of the A/F sensor is below 2.8 V (0.76 V)* during fuel enrichment (for example, when the vehicle tries to overtake another vehicle on a highway, the vehicle speed is suddenly increased with the accelerator pedal fully depressed), the A/F sensor are functioning normally.
- The A/F sensor is a current output element, and therefore the current is converted into voltage inside the ECM. If measuring voltage at connectors of A/F ratio sensor or ECM, you can obtain a constant voltage.

*: When using the OBD II scan tool (excluding hand–held tester).

OK	**Go to step 16.**

NG

3	Check connection of PCV valve and hose.

NG → Repair or replace PCV valve and hose

OK

4	Check resistance of A/F sensor heater (bank 1 sensor 1).

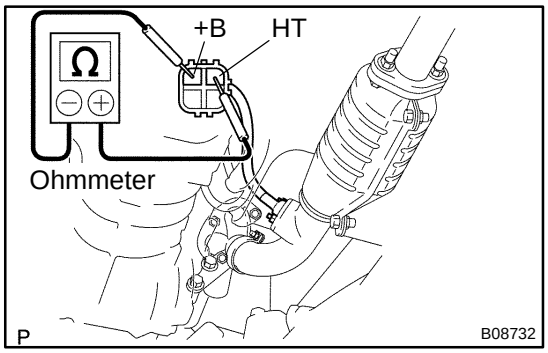

PREPARATION:
Disconnect the sensor connector.
CHECK:
Using an ohmmeter, measure the resistance between terminals +B and HT.
OK:

at 20˚C (68˚F)	0.8 – 1.4 Ω
at 800˚C (1,472˚F)	1.8 – 3.2 Ω

NG → Replace A/F sensor.

OK

5	Check EFI main relay (Marking: EFI).

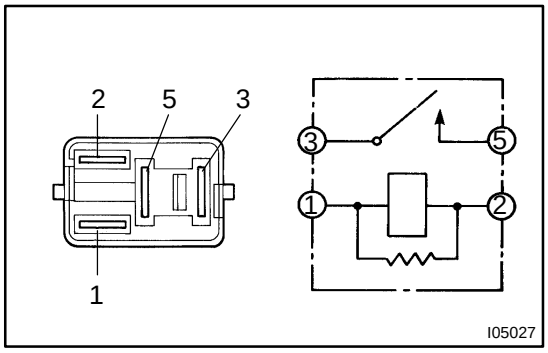

PREPARATION:
Remove the EFI main relay from RB No. 2.
CHECK:
Inspect the EFI main relay.
OK:

Condition	Tester connection	Specified condition
Constant	1 – 2	Continuity
	3 – 5	No continuity
Apply B+ between terminals 1 and 2.	3 – 5	Continuity

NG → Replace EFI main relay.

OK

6	Check for open and short in harness and connector between ECM and A/F sensor (bank 1 sensor 1) (See page IN–28).

NG → Repair or replace harness or connector.

OK

7	Check air induction system (See page SF–1).

NG → Repair or replace.

OK

8	Only for 3RZ–FE: Check EGR system (See page EC–13).

NG → Repair EGR system.

OK

9	Check gas leak on exhaust system.

NG → Repair or replace.

OK

10	Check fuel pressure (See page SF–5).

NG → Check and repair fuel pump, pressure regulator, fuel pipe line and filter (See page SF–1).

OK

11	Check injector injection (See page SF–18).

NG → Replace injector.

OK

12	Replace A/F sensor.

GO

13	Perform confirmation driving pattern (See page DI–185).

GO

14	Is there DTC P0134 being output again?

YES → Check and replace ECM (See page IN–28) and perform confirmation driving pattern (See page DI–185).

NO

15	Did vehicle run out of fuel in past?

NO → Check for intermittent problems (See page DI–3).

YES

DTC P0134 is caused by shortage of fuel.

16	Perform confirmation driving pattern (See page DI–185).

GO

17	Is there DTC P0134 being output again?

NO → Go to step 21.

YES

18	Replace A/F sensor.

GO

19	Perform confirmation driving pattern (See page DI–185).

GO

20	Is there DTC P0134 being output again ?

YES → Check and replace ECM (See page IN–28) and perform confirmation driving pattern (See page DI–185).

NO

21	**Did vehicle run out of fuel in past?**

NO → **Check for intermittent problems (See page DI–3).**

YES

DTC P0134 is caused by shortage of fuel.

DTC	P0135	Oxyge (A/F) Sensor Heater Circuit (Bank 1 Sensor 1)

CIRCUIT DESCRIPTION

Refer to DTC P2195 on page DI–185.

HINT:

- This DTC is related A/F sensor, although the caption is oxygen sensor.
- The ECM provides a pulse width to control current through the heater. The oxygen sensor heater circuit uses a relay on the B+ side of the circuit.

Reference

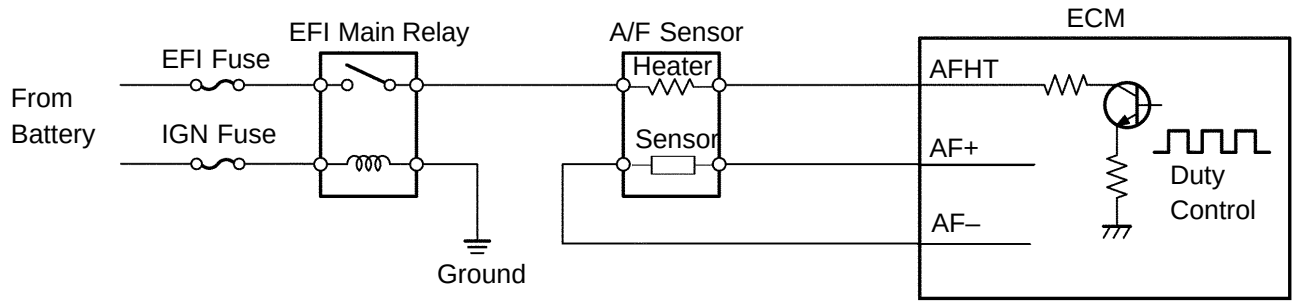

P A20024

DTC No.	DTC Detecting Condition	Trouble Area
P0135	When the heater operates, heater current exceeds 8 A (2 trip detection logic)	• Open or in heater circuit of A/F sensor • A/F sensor heater • ECM
	Heater current is 0.3 A or less when the heater operates (2 trip detection logic)	

WIRING DIAGRAM

Refer to DTC P0134 on page DI–50.

INSPECTION PROCEDURE

HINT:

Read freeze frame data using the hand–held tester or the OBD II scan tool, as freeze frame data records the engine conditions when a malfunction is detected. When troubleshooting, it is useful for determining whether the vehicle was running or stopped, the engine was warmed up or not, the air–fuel ratio was lean or rich, etc. at the time of the malfunction.

1	Check resistance of A/F sensor heater.

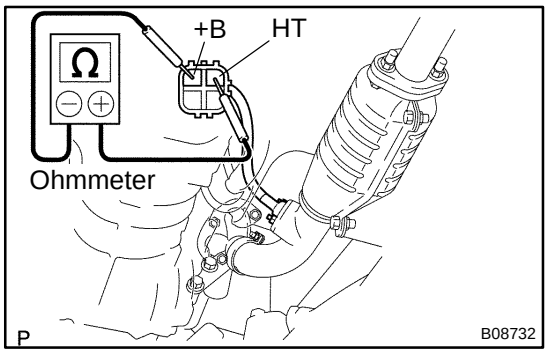

PREPARATION:
Disconnect the sensor connector.
CHECK:
Using an ohmmeter, measure the resistance between terminals +B and HT.
OK:

at 20˚C (68˚F)	0.8 – 1.4 Ω
at 800˚C (1,472˚F)	1.8 – 3.2 Ω

NG → **Replace A/F sensor.**

OK

2	Check EFI main relay (Marking: EFI).

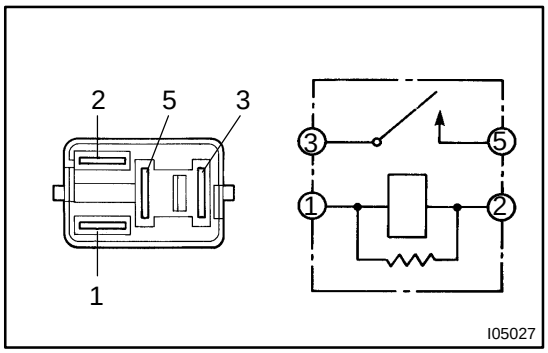

PREPARATION:
Remove the EFI main relay from RB No. 2.
CHECK:
Inspect the EFI main relay.
OK:

Condition	Tester connection	Specified condition
Constant	1 – 2	Continuity
	3 – 5	No continuity
Apply B+ between terminals 1 and 2.	3 – 5	Continuity

NG → **Replace EFI main relay.**

OK

3	**Check voltage between terminals AFHT of ECM connector and body ground.**

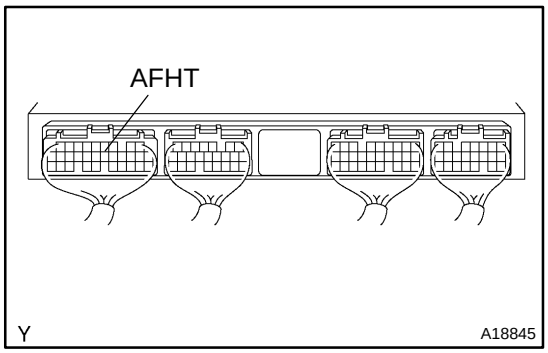

PREPARATION:

(a) Remove the glove compartment (See page SF–55).

(b) Turn the ignition switch ON.

CHECK:

Measure the voltage between terminals AFHT of the ECM connector and the body ground.

OK:

Voltage: 9 – 14 V

OK → **Check and replace ECM (See page IN–28).**

NG

Check and repair harness or connector between EFI main relay (Marking: EFI) and A/F sensor, and A/F sensor and ECM (See page IN–28).

DIB29–01

DTC	P0136	Oxygen Sensor Malfunction (Bank 1 Sensor 2)

CIRCUIT DESCRIPTION

To obtain a high purification rate for the CO, HC and NOx components of the exhaust gas, a three–way catalytic converter is used, but for the most efficient use of the three–way catalytic converter, the air–fuel ratio must be precisely controlled so that it is always close to the stoichiometric air–fuel ratio.

The oxygen sensor has the characteristic whereby its output voltage changes suddenly in the vicinity of the stoichiometric air–fuel ratio. This is used to detect the oxygen concentration in the exhaust gas and provide feedback to the computer for control of the air–fuel ratio.

When the air–fuel ratio becomes LEAN, the oxygen concentration in the exhaust increases and the oxygen sensor informs the ECM of the LEAN condition (small electromotive force: < 0.45 V).

When the air–fuel ratio is RICHER than the stoichiometric air–fuel ratio the oxygen concentration in the exhaust gas in reduced and the oxygen sensor informs the ECM of the RICH condition (large electromotive force: > 0.45V).

The ECM judges by the electromotive force from the oxygen sensor whether the air–fuel ratio is RICH or LEAN and controls the injection time accordingly. However, if malfunction of the oxygen sensor causes output of abnormal electromotive force, the ECM is unable to perform accurate air–fuel ratio control.

The oxygen sensors include a heater which heats the zirconia element. The heater is controlled by the ECM. When the intake air volume is low (the temp. of the exhaust gas is low) current flows to the heater to heat the sensor for accurate oxygen concentration detection.

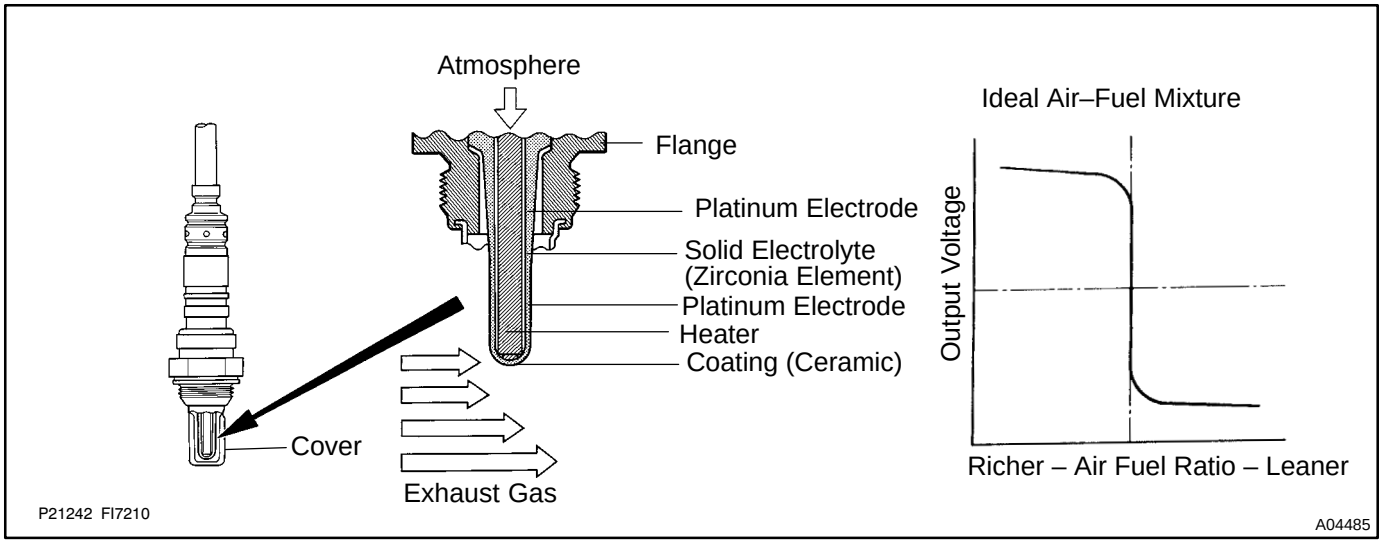

DTC No.	DTC Detection Condition	Trouble Area
P0136	Voltage output of heated oxygen sensor remains at 0.4 V or more to 0.6 V or less when vehicle is driven at 40 km/h (25 mph) or more after engine is warmed up (2 trip detection logic)	• Open or short in heated oxygen sensor circuit • Heated oxygen sensor

HINT:

- Sensor 1 refers to the sensor closest to the engine body.
- Sensor 2 refers to the sensor farthest from the engine body.

WIRING DIAGRAM

Refer to DTC P0134 on page DI–50.

CONFIRMATION DRIVING PATTERN

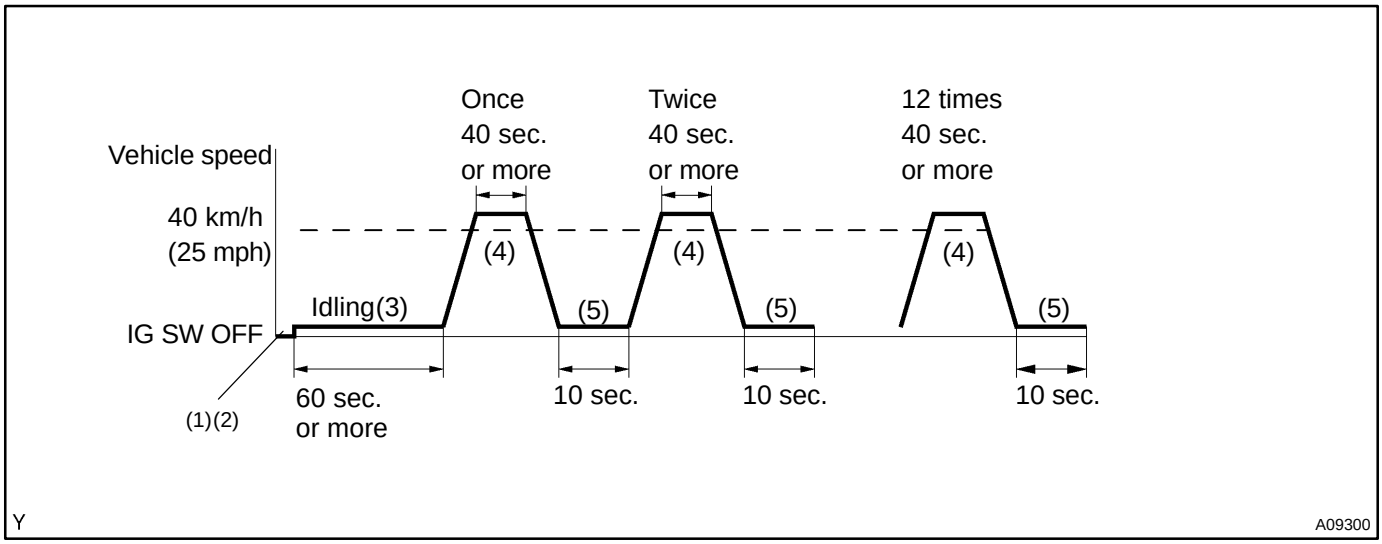

(1) Connect the hand–held tester to the DLC3.
(2) Switch the hand–held tester from the Normal Mode to the Check (Test) Mode (See page DI–3).
(3) Start the engine and let the engine idle for 60 seconds or more.
(4) Drive the vehicle at 40 km/h (25 mph) or more for 40 seconds or more.
(5) Let the engine idle for 10 seconds or more.
(6) Preform steps (4) to (5) 12 times.

HINT:
If a malfunction exists, the MIL will light up on the combination meter during step (6).
NOTICE:
If the conditions in this test are not strictly followed, detection of the malfunction will not be possible. If you do not have a hand–held tester, turn the ignition switch OFF after performing steps (3) to (6), then perform steps (3) to (6) again.

INSPECTION PROCEDURE

HINT:
Hand–held tester only:
The narrowing down the trouble area is possible by performing ACTIVE TEST of the following ”A/F CONTROL” (A/F sensor, heated oxygen sensor or another can be distinguished).
Perform ACTIVE TEST by hand–held tester (A/F CONTROL).
HINT:
”A/F CONTROL” is an ACTIVE TEST which change the injection volume to –12.5 % or +25 %.

(1) Connect the hand–held tester to the DLC3 on the vehicle.
(2) Turn the ignition switch ON.
(3) Warm up the engine with the engine speed at 2,500 rpm for approx. 90 sec.
(4) Select the item ”DIAGNOSIS/ENHANCED OBD II/ACTIVE TEST/ A/F CONTROL”.
(5) Perform ”A/F CONTROL” when idle condition (press the ← or → button).

Result:
A/F sensor reacts in synchronizing with increase and decrease of injection volume (+25 % → rich output: Less than 3.0 V, –12.5 % → lean output: More than 3.35 V)
Heated oxygen sensor reacts in synchronizing with increase and decrease of injection volume (+25 % → rich output: More than 0.55 V, –12.5 % → lean output: Less than 0.4 V)

NOTICE:
However, there is a few second delay in the A/F sensor output. And there is about 20 seconds delay in the heated oxygen sensor.

	Output voltage of A/F sensor (sensor 1)	Output voltage of heated oxygen sensor (sensor 2)	Mainly suspect trouble area
Case 1	Injection volume +25 % –12.5 % Output voltage More than 3.35 V Less than 3.0 V **OK**	Injection volume +25 % –12.5 % Output voltage More than 0.55 V Less than 0.4 V **OK**	—
Case 2	Injection volume +25 % –12.5 % Output voltage No reaction **NG**	Injection volume +25 % –12.5 % Output voltage More than 0.55 V Less than 0.4 V **OK**	A/F sensor (A/F sensor, heater, A/F sensor circuit)
Case 3	Injection volume +25 % –12.5 % Output voltage More than 3.35 V Less than 3.0 V **OK**	Injection volume +25 % –12.5 % Output voltage No reaction **NG**	Heated oxygen sensor (heated oxygen sensor, heater, heated oxygen sensor circuit)
Case 4	Injection volume +25 % –12.5 % Output voltage No reaction **NG**	Injection volume +25 % –12.5 % Output voltage No reaction **NG**	Extremely rich or lean of the actual air–fuel ratio (Injector, fuel pressure, gas leakage in exhaust system, etc)

The following procedure of A/F CONTROL enable that to check its output (show its graph indication) of A/F sensor and heated oxygen sensor.
To display the graph indication. Select and push the ”YES or NO” button 2 data ”AFS B1S1 and O2S B1S2” or ”AFS B2S1 and O2S B2S2” and press button ”4” after selecting ”ACTIVE TEST/ A/F CONTROL/USER DATA”.
HINT:
Read freeze frame data using the hand–held tester or the OBD II scan tool, as freeze frame data records the engine conditions when a malfunction is detected. When troubleshooting, it is useful for determining whether the vehicle was running or stopped, the engine was warmed up or not, the air–fuel ratio was lean or rich, etc. at the time of the malfunction.

1	**Are there any other codes (besides DTC P0136) being output?**

YES → **Go to relevant DTC chart (See page DI–16).**

NO

2	**Check for open and short in harness and connector between ECM and heated oxygen sensor (See page IN–28).**

NG → **Repair or replace harness or connector.**

OK

3	**Check output voltage of oxygen sensor.**

PREPARATION:

(a) Connect the hand–held tester or OBD II scan tool to the DLC3.
(b) Warm up the engine to normal operating temperature.
(c) Select the item ” DIAGNOSIS/ENHANCED OBD II/DATA LIST/ALL/O2S B1 S2 ”.

CHECK:

Read the voltage output of the heated oxygen sensor when the engine is suddenly raced.
HINT:
Perform quick racing to 3,000 rpm 6 times using the accelerator pedal.

OK:

Heated oxygen sensor output voltage: Alternates from 0.4 V or less to 0.6 V or more.

OK → **Check that each connector is properly connected.**

NG

Replace oxygen sensor.

DIB2B–01

DTC	P0171	System too Lean (Bank 1)

DTC	P0172	System too Rich (Bank 1)

CIRCUIT DESCRIPTION

The fuel trim is related to the feedback compensation value, not to the basic injection time. The fuel trim includes the short–term fuel trim and the long–term fuel trim. The short–term fuel trim is the short–term fuel compensation used to maintain the air–fuel ratio at its ideal theoretical value. The signal from the A/F sensor is approximately proportional to the existing air–fuel ratio. Comparing it with the ideal theoretical value, the ECM reduces fuel volume immediately if the air–fuel ratio is RICH and increases fuel volume if it is LEAN. The long–term fuel trim compensates for the deviation from the central value of the short–term fuel trim which is stored up by each engine tolerance, and the deviation from the central value due to the passage of time and changes of environment. If both the short–term fuel trim and the long–term fuel trim exceed a certain value, it is detected as a malfunction and the MIL lights up.

DTC No.	DTC Detection Condition	Trouble Area
P0171	When air fuel ratio feedback is stable after warming up engine, fuel trim is considerably in error on LEAN side (2 trip detection logic)	• Air induction system • Injector blockage • Mass air flow meter • Engine coolant temp. sensor • Fuel pressure • Gas leakage in exhaust system • Open or short in A/F sensor (bank 1 sensor 1) circuit • A/F sensor (bank 1 sensor 1) • PCV valve and hose • PCV hose connection • EFI main relay • A/F sensor heater and relay circuit
P0172	When air fuel ratio feedback is stable after warming up engine, fuel trim is considerably in error on RICH side (2 trip detection logic)	• Injector leak or blockage • Mass air flow meter • Engine coolant temp. sensor • Ignition system • Fuel pressure • Gas leakage in exhaust system • Open or short in A/F sensor (bank 1 sensor 1) circuit • A/F sensor (bank 1 sensor 1) • EFI main relay • A/F sensor heater and relay circuit

HINT:

- When the DTC P0171 is recorded, the actual air–fuel ratio is on the LEAN side. When DTC P0172 is recorded, the actual air–fuel ratio is on the RICH side.
- If the vehicle runs out of fuel, the air–fuel ratio is lean and DTC P0171 is recorded. The MIL then comes on.
- If the total of the short–term fuel trim value and long–term fuel trim value is within +30 %, –35 % (75˚C or more), the system is functioning normally.

- The A/F sensor (bank 1 sensor 1) output voltage and the short–term fuel trim value can be read using the hand–held tester or OBD II scan tool.
- The ECM controls the voltage of the AF+ and AF– terminals of the ECM to the fixed voltage. Therefore, it is impossible to confirm the A/F sensor output voltage without hand–held tester or OBD II scan tool.
- OBD II scan tool (excluding hand–held tester) displays the one fifth of the A/F sensor output voltage which is displayed on the hand–held tester.

WIRING DIAGRAM

Refer to DTC P0134 on page DI–50.

INSPECTION PROCEDURE

HINT:

Hand–held tester only:

The narrowing down the trouble area is possible by performing ACTIVE TEST of the following ”A/F CONTROL” (A/F sensor, heated oxygen sensor or another can be distinguished).

Perform ACTIVE TEST by hand–held tester (A/F CONTROL).

HINT:

”A/F CONTROL” is an ACTIVE TEST which change the injection volume to –12.5 % or +25 %.

(1) Connect the hand–held tester to the DLC3 on the vehicle.
(2) Turn the ignition switch ON.
(3) Warm up the engine with the engine speed at 2,500 rpm for approx. 90 sec.
(4) Select the item ”DIAGNOSIS/ENHANCED OBD II/ACTIVE TEST/ A/F CONTROL”.
(5) Perform ”A/F CONTROL” when idle condition (press the ← or → button).

Result:

A/F sensor reacts in synchronizing with increase and decrease of injection volume (+25 % → rich output: Less than 3.0 V, –12.5 % → lean output: More than 3.35 V)

Heated oxygen sensor reacts in synchronizing with increase and decrease of injection volume (+25 % → rich output: More than 0.55 V, –12.5 % → lean output: Less than 0.4 V)

NOTICE:

However, there is a few second delay in the A/F sensor output. And there is about 20 seconds delay in the heated oxygen sensor.

	Output voltage of A/F sensor (sensor 1)	Output voltage of heated oxygen sensor (sensor 2)	Mainly suspect trouble area
Case 1	Injection volume +25 % –12.5 % Output voltage More than 3.35 V Less than 3.0 V **OK**	Injection volume +25 % –12.5 % Output voltage More than 0.55 V Less than 0.4 V **OK**	—
Case 2	Injection volume +25 % –12.5 % Output voltage No reaction **NG**	Injection volume +25 % –12.5 % Output voltage More than 0.55 V Less than 0.4 V **OK**	A/F sensor (A/F sensor, heater, A/F sensor circuit)
Case 3	Injection volume +25 % –12.5 % Output voltage More than 3.35 V Less than 3.0 V **OK**	Injection volume +25 % –12.5 % Output voltage No reaction **NG**	Heated oxygen sensor (heated oxygen sensor, heater, heated oxygen sensor circuit)
Case 4	Injection volume +25 % –12.5 % Output voltage No reaction **NG**	Injection volume +25 % –12.5 % Output voltage No reaction **NG**	Extremely rich or lean of the actual air–fuel ratio (Injector, fuel pressure, gas leakage in exhaust system, etc)

The following procedure of A/F CONTROL enable that to check its output (show its graph indication) of A/F sensor and heated oxygen sensor.
To display the graph indication. Select and push the ”YES or NO” button 2 data ”AFS B1S1 and O2S B1S2” or ”AFS B2S1 and O2S B2S2” and press button ”4” after selecting ”ACTIVE TEST/ A/F CONTROL/USER DATA”.
HINT:

- A low A/F sensor voltage could be caused by a rich air fuel mixture. Check for conditions that would cause the engine to run rich.
- A high A/F sensor voltage could be caused by a lean air fuel mixture. Check for conditions that would cause the engine to run lean.
- Read freeze frame data using the hand–held tester or the OBD II scan tool, as freeze frame data records the engine conditions when a malfunction is detected. When troubleshooting, it is useful for determining whether the vehicle was running or stopped, the engine was warmed up or not, the air–fuel ratio was lean or rich, etc. at the time of the malfunction.

1	Check air induction system (See page SF–1).

NG → Repair or replace.

OK

2	Check connection of PCV hose.

NG → Repair or replace PCV hose.

OK

3	Check injector injection (See page SF–18).

NG → Replace injector.

OK

4	Check mass air flow meter (See page SF–25) and engine coolant temperature sensor (See page SF–47).

NG → Repair or replace.

OK

5	Check for spark and ignition (See page IG–1).

NG → Repair or replace.

OK

6	**Check fuel pressure (See page SF–5).**

NG → **Check and repair fuel pump, pressure regulator, fuel pipe line and filter.**

OK

7	**Check gas leakage on exhaust system.**

NG → **Repair or replace.**

OK

8	**Check output voltage A/F sensor (bank 1 sensor 1).**

PREPARATION:

(a) Connect the hand–held tester or the OBD II scan tool to the DLC 3.
(b) Warm up the A/F sensor (bank 1 sensor 1) with the engine at 2,500 rpm for approximately 90 seconds.
(c) Read A/F sensor voltage on the OBD II scan tool or hand–held tester.

CHECK:

(a) Hand–held tester only:
Select the ”DIAGNOSIS/ENHANCED OBD II/SNAPSHOT/MANUAL SNAPSHOT/USER DATA” mode on the hand–held tester.
(b) Select ”AFS B1 S1/ENGINE SPD” and press button ”YES”.
(c) Monitor the A/F sensor voltage carefully.
(d) Check the A/F sensor voltage under the condition as follows.
(1) Allow engine to idle for 30 seconds.
(2) Engine is racing at approx. 2,500 rpm (when engine revolution is not suddenly changed).
(3) Raise the engine speed to 4,000 rpm and release the accelerator pedal fully closed quickly.

OK:

Standard:
Condition (1) and (2)
Voltage change a little in the vicinity of 3.3 V (0.66 V)* (between approx. 3.1 – 3.5 V) as shown in the illustration.
Condition (3)
A/F ratio sensor voltage increase to 3.8 V (0.76 V)* or more during engine deceleration (when fuel cut) as shown in the illustration.

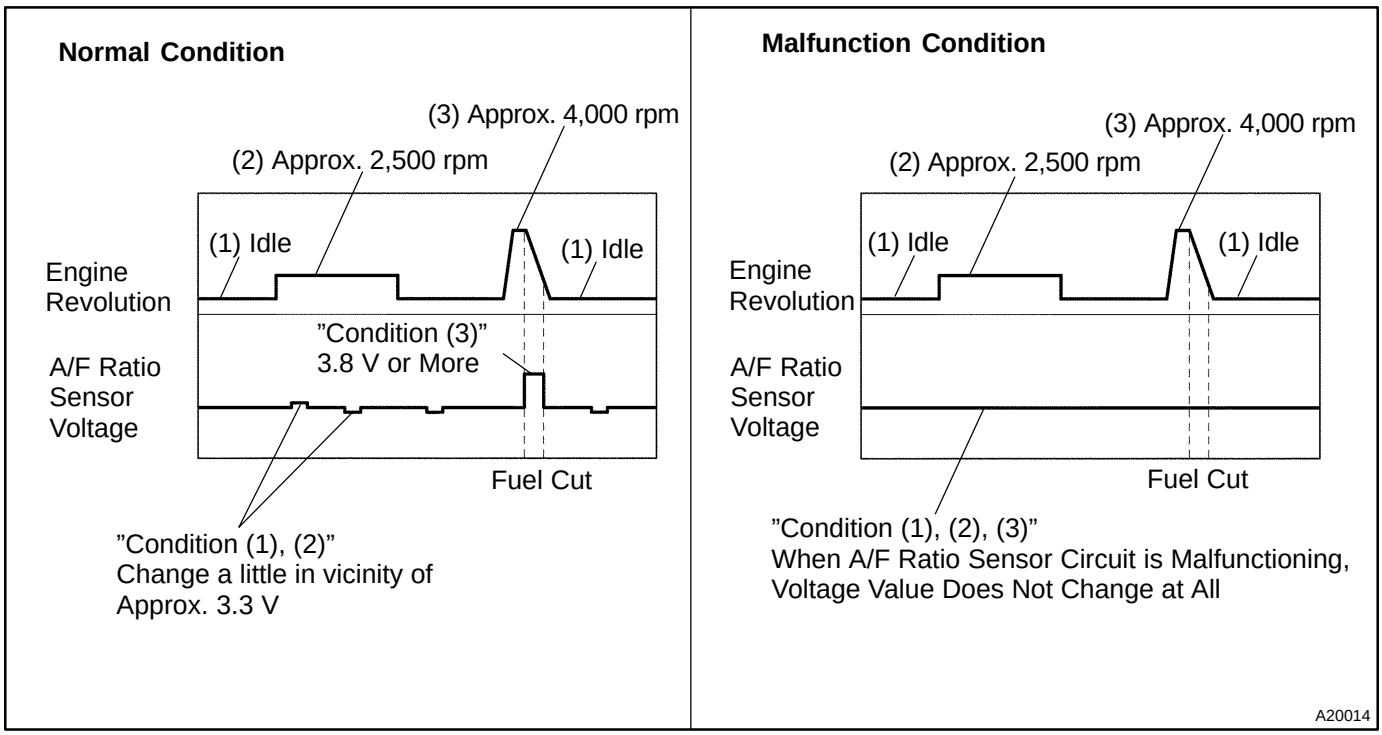

HINT:

- Whenever the output voltage of the A/F sensor remains at approx. 3.3 V (0.660 V)* (see dwg. 2) under any conditions as well as the above conditions, the A/F sensor may have an open–circuit. (This will happen also when the A/F sensor heater has an open–circuit.)
- Whenever the output voltage of the A/F sensor remains at a certain value of approx. 3.8 V (0.76 V)* or more, or 2.8 V (0.56 V)* or less (see dwg. 2) under any conditions as well as the above conditions, the A/F sensor may have a short–circuit.
- The ECM will stop fuel injection (fuel cut) during engine deceleration. This will cause a lean condition and should result in a momentary increase in A/F ratio sensor voltage.
- The ECM must establish a closed throttle position learned value to perform fuel cut. If the battery terminal has been disconnected, the vehicle must be driven over 10 mph to allow the ECM to relearn the closed throttle position.
- When the vehicle is driven:
  In the case that the output voltage of the A/F sensor is below 2.8 V (0.76 V)* during fuel enrichment (for example, when the vehicle tries to overtake another vehicle on a highway, the vehicle speed is suddenly increased with the accelerator pedal fully depressed), the A/F sensor are functioning normally.
- The A/F sensor is a current output element, and therefore the current is converted into voltage inside the ECM. If measuring voltage at connectors of A/F ratio sensor or ECM, you can obtain a constant voltage.

*: When using the OBD II scan tool (excluding hand–held tester).

OK	**Go to step 16.**

NG

9	Check resistance of A/F sensor heater (bank 1 sensor 1).

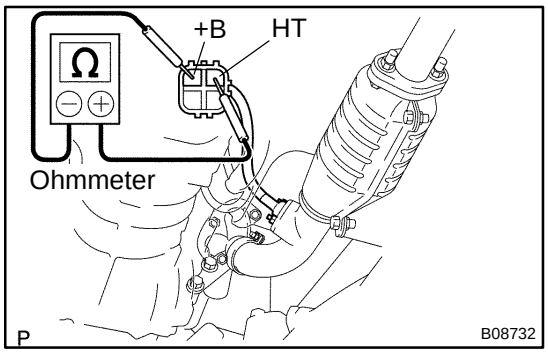

PREPARATION:
Disconnect the sensor connector.
CHECK:
Using an ohmmeter, measure the resistance between terminals +B and HT.
OK:

at 20°C (68°F)	0.8 – 1.4 Ω
at 800°C (1,472°F)	1.8 – 3.2 Ω

NG → **Replace A/F sensor.**

OK

10	Check EFI main relay (Marking: EFI).

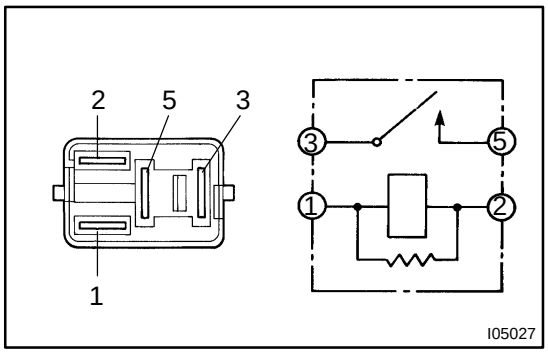

PREPARATION:
Remove the EFI main relay from RB No. 2.
CHECK:
Inspect the EFI main relay.
OK:

Condition	Tester connection	Specified condition
Constant	1 – 2	Continuity
	3 – 5	No continuity
Apply B+ between terminals 1 and 2.	3 – 5	Continuity

NG → **Replace EFI main relay.**

OK

11	Check for open and short in harness and connector between ECM and A/F sensor (bank 1 sensor 1) (See page IN–28).

NG → **Repair or replace harness or connector.**

OK

12	Replace A/F sensor.

GO

13	Perform confirmation driving pattern (See page DI–185).

GO

14	Is there DTC P0171 or P0172 being output again?

YES → Check and replace ECM (See page IN–28) and perform confirmation driving pattern (See page DI–185).

NO

15	Did vehicle run out of fuel in past?

NO → Check for intermittent problems (See page DI–3).

YES

DTC P0171 or P0172 is caused by shortage of fuel.

16	Perform confirmation driving pattern (See page DI–185).

GO

17	Is there DTC P0171 or P0172 being output again?

NO → Go to step 20.

YES

18	Replace A/F sensor.

GO

19	Are there DTC P0171 and/or P0172 being output again ?

YES → Check and replace ECM (See page IN–28) and perform confirmation driving pattern (See page DI–185).

NO

20	Did vehicle run out of fuel in past?

NO → Check for intermittent problems (See page DI–218).

YES

DTC P0171 or P0172 is caused by shortage of fuel.

DIB2D–01

DTC	P0300	Random/Multiple Cylinder Misfire Detected

DTC	P0301	Cylinder 1 Misfire Detected

DTC	P0302	Cylinder 2 Misfire Detected

DTC	P0303	Cylinder 3 Misfire Detected

DTC	P0304	Cylinder 4 Misfire Detected

CIRCUIT DESCRIPTION

Misfire: The ECM uses the crankshaft position sensor and camshaft position sensor to monitor changes in the crankshaft rotation for each cylinder.

The ECM counts the number of times the engine speed change rate indicates that misfire has occurred. And when the misfire rate equals or exceeds the count indicating that the engine condition has deteriorated, the MIL lights up.

If the misfire rate is high enough and the driving conditions will cause catalyst overheating, the MIL blinks when misfiring occurs.

HINT:

- For any particular 200 revolutions of engine, misfiring is detected, which can cause catalyst to overheat (This cause MIL to blink. 1trip detection logic).
- For any particular 1,000 revolutions of engine, misfiring is detected, which causes deterioration in emissions (This cause MIL to light up. 2trip detection logic).

DTC No.	DTC Detection Condition	Trouble Area
P0300	Misfiring of random cylinders is detected	• Open or short in engine wire • Connector connection • Vacuum hose connection • Ignition system • Injector • Fuel pressure • EGR system (Only for 3RZ–FE) • Mass air flow meter • Engine coolant temp. sensor • Compression pressure • Valve clearance • Valve timing • PCV hose connection • PCV hose • ECM
P0301 P0302 P0303 P0304	Misfiring of each cylinder is detected	

HINT:
When the 2 or more codes for a misfiring cylinder are recorded repeatedly but no random misfire code is recorded, it indicates that the misfires were detected and recorded at different times.

WIRING DIAGRAM

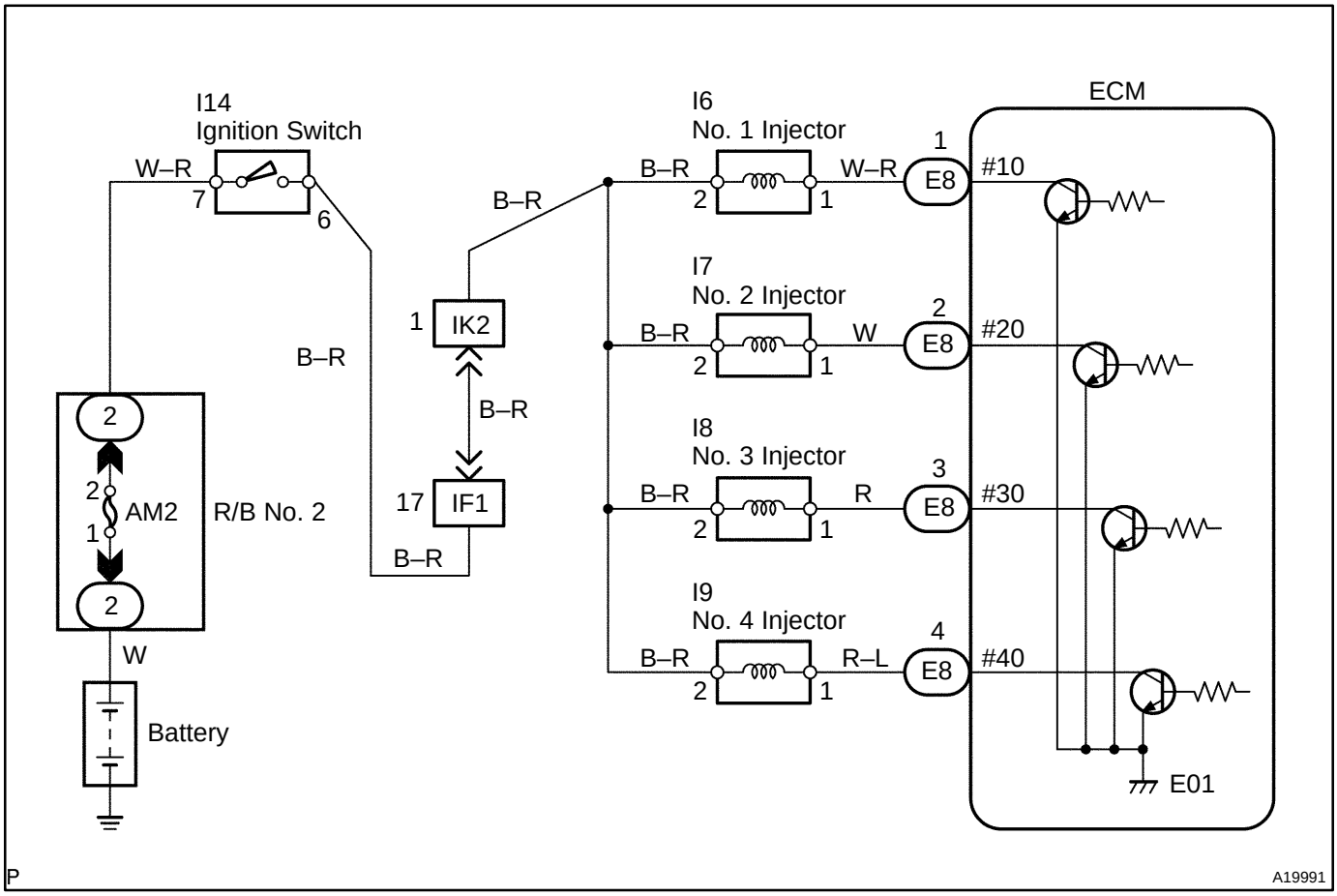

CONFIRMATION DRIVING PATTERN

(a) Connect the hand–held tester or OBD II scan tool.
(b) Record DTC and the freeze frame data.
(c) Use the hand–held tester to set to the check mode (See page DI–3).
(d) Read the value on the misfire counter for each cylinder when idling. If the value is displayed on the misfire counter, skip the following procedure of confirmation driving.
(e) Drive the vehicle several times with the engine speed, load and its surrounding range shown with ENGINE SPD, CALC LOAD in the freeze frame data or MISFIRE RPM, MISFIRE LOAD in the data list.

If you have no hand–held tester, turn the ignition switch OFF after the symptom is simulated the first time. Then repeat the simulation process again.
HINT:
In order to memorize the DTC of misfire, it is necessary to drive around MISFIRE RPM, MISFIRE LOAD for the following period of time in the data list. Take care not to turn the ignition switch OFF. Turning the ignition switch OFF switches the diagnosis system from check (test) mode to normal mode. So all DTCs, etc., are erased.

Engine Speed	Time
Idling	3 min. 30 sec. or more
1,000 rpm	3 min. or more
2,000 rpm	1 min. 30 sec. or more
3,000 rpm	1 min. or more

(f) Check whether there is misfire or not by monitoring DTC and the freeze frame data. After that, record them.

(g) Turn the ignition switch OFF and wait at least 5 seconds.

INSPECTION PROCEDURE

HINT:

- If DTCs besides misfire are memorized simultaneously, first perform the troubleshooting for them.
- Read freeze frame data using the hand–held tester or the OBD II scan tool, as freeze frame data records the engine conditions when a malfunction is detected. When troubleshooting, it is useful for determining whether the vehicle was running or stopped, the engine was warmed up or not, the air–fuel ratio was lean or rich, etc. at the time of the malfunction.
- When the vehicle is brought to the workshop and the misfire is not occurred, misfire can be confirmed by reproducing the condition of the freeze frame data. Also, after finishing the repair, confirm that there is no misfire (See the confirmation driving pattern).
- On 6 and 8 cylinder engines, misfiring cylinder identification is disabled at high engine speed and only an general misfire fault code P0300 is stored instead of a cylinder specific misfire fault code (i. e., P0301 – P0308). Under the following conditions, only P0300 code may be stored. Misfire starts in the high engine speed area or Misfire occurs only in the high engine speed area. Therefore, when a general misfire fault code (i.e., P0300) is only stored, erase the DTCs after read freeze frame data with the hand–held tester or OBD II scan tool. Start the engine and drive the confirmation patten (See the CONFIRMATION DRIVING PATTERN) and read the value of the misfire ratio for each cylinder (or DTC). Perform the repair correspond to the high misfire ratio cylinder (or the misfiring cylinder indicated by DTC). After completing the repair, confirm no misfire is occurring by driving the confirmation pattern.
- When either of SHORT FT #1, LONG FT #1, SHORT FT #2 or LONG FT #2 in the freeze frame data is besides the range of ±20 %, there is a possibility that the air–fuel ratio is inclining either to RICH (–20 % or less) or LEAN (+20 % or more).
- When COOLANT TEMP in the freeze frame data is less than 80˚C (176˚F), there is a possibility or misfire only during warming up.
- If the misfire cannot be reproduced, the reason may be because of the driving with lack or fuel, the use of improper fuel, a stain on ignition plug, etc.
- Be sure to check the value on the misfire counter after the repair.

1	**Are there any other codes (besides DTC P0300, P0301, P0302, P0303 or P0304) being output?**

HINT:

If any other code besides DTC (P0300, P0301, P0302, P0303 or P0304) output, perform the troubleshoot on that DTC.

YES → **Go to relevant DTC chart (See page DI–231).**

NO

2	**Check wire harness, connector and vacuum hose in engine room.**

CHECK:

(a) Check the connection conditions of wire harness and connector.

(b) Check the disconnection, piping and break of vacuum hose.

NG → **Repair or replace, then confirm that there is no misfire (See confirmation driving pattern).**

OK

3	**Check connection of PCV hose.**

NG → **Repair or replace PCV hose.**

OK

4	**Connect hand–held tester, and read the number of misfire.**

PREPARATION:

(a) Connect the hand–held tester to the DLC3.

(b) Turn the ignition switch ON and push the hand–held tester main switch ON.

(c) Select the item ”DIAGNOSIS/ ENHANCED OBD II/DATA LIST/ALL/CYL #1 – CYL #4”.

(d) Start the engine.

CHECK:

Read the number of misfire on the hand–held tester.

HINT:

When a misfire is not is reproduced, be sure to branch below based on the stored DTC.

RESULT:

High Misfire Rate Cylinder	Proceed to
1 or 2 cylinders	Type I
More than 3 cylinders	Type II

Type II → **Go to step 16.**

Type I

5	Check spark plug and spark of misfiring cylinder (See page IG–1).

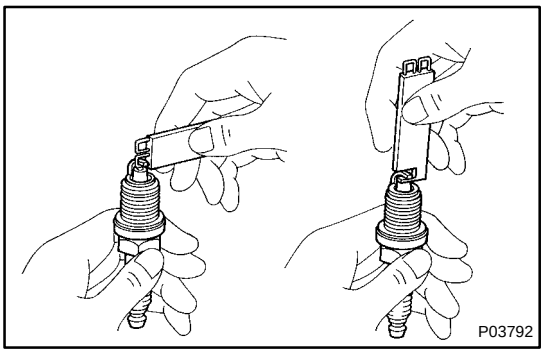

PREPARATION:

(a) Remove the ignition coil.

(b) Remove the spark plug.

CHECK:

(a) Check spark plug type.

(b) Check the electrode for carbon deposits.

(c) Check the electrode gap.

OK:

(a) Recommended spark plug:

DENSO made	K16R–U11
NGK made	BKR5EYA–11

(b)

No large carbon deposit present.

Not wet with gasoline or oil.

(c)

Correct electrode gap for new spark plug:

1.0 – 1.1 mm (0.039 – 0.043 in.)

PREPARATION:

(a) Install the spark plug to the ignition coil, and connect the ignition coil the connector.

(b) Disconnect injector connector.

(c) Ground the spark plug.

CHECK:

Check if spark occurs while engine is being cranked.

NOTICE:

To prevent excess fuel from being injected from the injectors during this test, don't crank the engine for more than 5 – 10 sec. at a time.

OK:

Spark jumps across electrode gap.

OK	**Go to step 8.**

NG

6	**Change normal spark plug and check spark of misfiring cylinder.**

PREPARATION:

(a) Disconnect the spark plug.
(b) Replace the normal spark plug.
(c) Install the spark plug to the ignition coil, and connect the ignition coil the connector.
(d) Disconnect the injector connector.
(e) Ground the spark plug.

CHECK:

Check if spark occurs while the engine is being cranked.

NOTICE:

To prevent excess fuel from being injected from the injectors during this test, don't crank the engine for more than 5 – 10 seconds at a time.

OK:

Spark jumps across electrode gap.

OK → **Replace spark plug.**

NG

7	**Check for open and short in harness and connector between misfire cylinder of ignition coil with igniter and ECM (See page IN–28).**

OK → **Replace ignition coil with igniter, then confirm that there is no misfire.**

NG

Repair or replace harness or connector (See page IN–28).

8	Check voltage of ECM terminals for injector of failed cylinder.

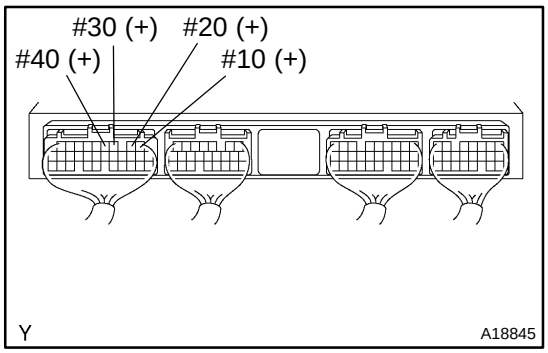

PREPARATION:

(a) Remove the glove compartment (See page SF–55).

(b) Turn the ignition switch ON.

CHECK:

Measure the voltage between applicable terminal of the ECM connector and the body ground.

OK:

Voltage: 9 – 14 V

Reference: INSPECTION USING OSCILLOSCOPE

With the engine idling, check the waveform between terminals #10 – #40 and E01 of the ECM connector.

HINT:

The correct waveform is as shown.

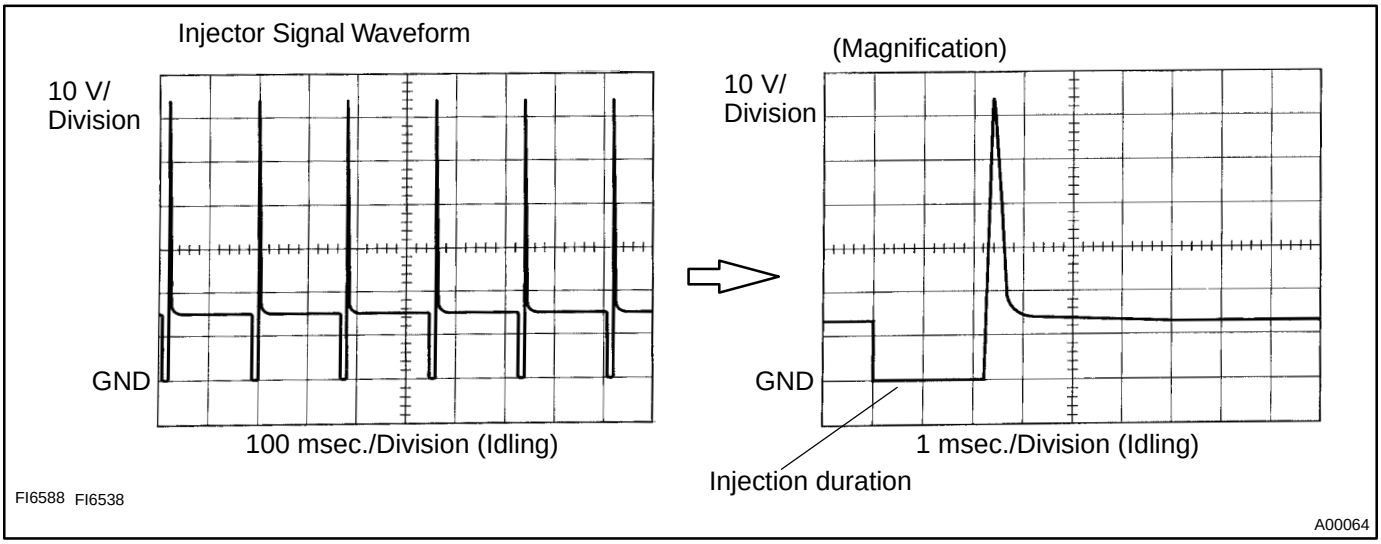

OK	Go to step 11.

NG

9	Check resistance of injector of misfiring cylinder (See page SF–15).

NG	Replace injector.

OK

10	Check for open and short in harness and connector between ignition switch and injector, injector and ECM of misfiring cylinder (See page IN–28)

NG → Repair or replace harness or connector.

OK

11	Check injector injection of misfiring cylinder (See page SF–18).

NG → Replace injector.

OK

12	Only for 3RZ–FE: Check EGR system (See page EC–13).

NG → Repair EGR system.

OK

13	Check compression pressure of misfiring cylinder (See page EM–3).

NG → Repair or replace.

OK

14	Check valve clearance of misfiring cylinder (See page EM–5).

NG → Adjust valve clearance.

OK

15	Switch the step by the number of misfire cylinder (Refer the result of Step 4).

High Misfire Rate Cylinder	Proceed to
1 or 2 cylinders	Type I
More than 3 cylinders	Type II

Type II → Check intermittent problems (See page DI–3).

Type I

16	Check valve timing (Check for loose and jumping teeth of timing chain) (See page EM–22).

NG → Adjust valve timing (Repair or replace timing belt).

OK

17	Check fuel pressure (See page SF–5).

NG → Check and repair fuel pump, pressure regulator, fuel pipe line and filter.

OK

18	Check mass air flow meter (See page SF–25).

NG → Repair mass air flow meter.

OK

19	Check engine coolant temp. sensor (See page SF–47).

NG → Replace engine coolant temp. sensor.

OK

20	Switch the step by the number of misfire cylinder (Refer the result of Step 4).

High Misfire Rate Cylinder	Proceed to
1 or 2 cylinders	Type I
More than 3 cylinders	Type II

Type II → Go to step 5.

Type I

Check intermittent problems
(See page DI–3).

DI12U–13

DTC	P0325	Knock Sensor 1 Circuit Malfunction

CIRCUIT DESCRIPTION

Knock sensor is fitted to the cylinder block to detect engine knocking. This sensor contains a piezoelectric element which generates a voltage when it becomes deformed, which occurs when the cylinder block vibrates due to knocking. If engine knocking occurs, ignition timing is retarded to suppress it.

DTC No.	DTC Detection Condition	Trouble Area
P0325	No knock sensor 1 signal to ECM with engine speed 1,200 rpm or more	• Open or short in knock sensor circuit • Knock sensor (looseness) • ECM

WIRING DIAGRAM

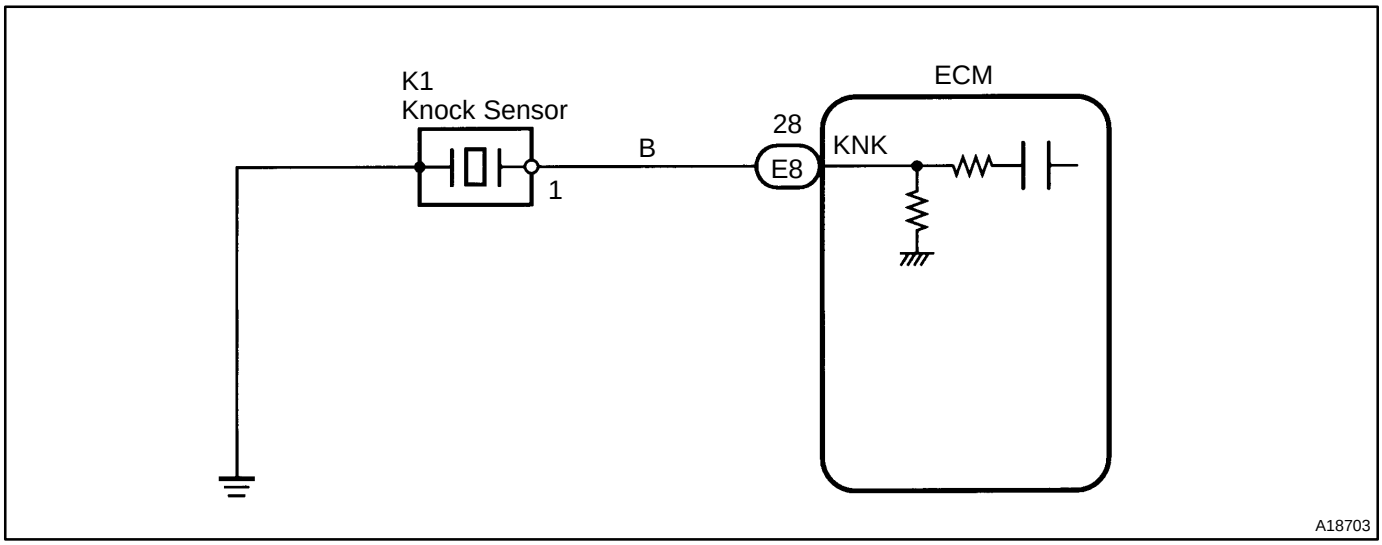

INSPECTION PROCEDURE

HINT:

Read freeze frame data using the hand–held tester or the OBD II scan tool, as freeze frame data records the engine conditions when a malfunction is detected. When troubleshooting, it is useful for determining whether the vehicle was running or stopped, the engine was warmed up or not, the air–fuel ratio was lean or rich, etc. at the time of the malfunction.

1	**Check continuity between terminal KNK of ECM connector and body ground.**

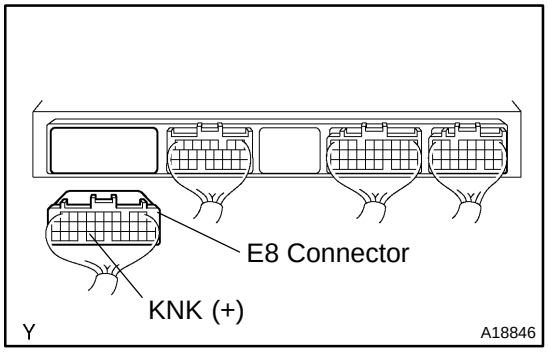

PREPARATION:

(a) Remove the glove compartment (See page SF–55).

(b) Disconnect the ECM E8 connector.

CHECK:

Measure the resistance between terminal KNK of the ECM connector and the body ground.

OK:

Resistance: 1 MΩ or higher

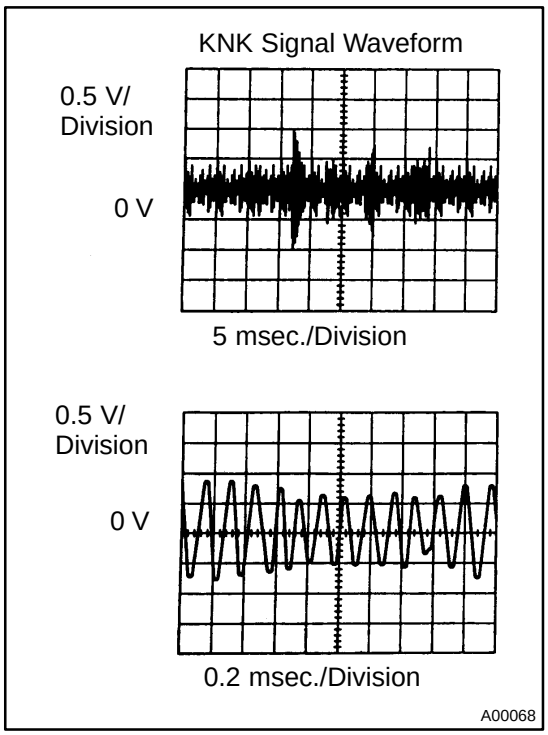

Reference: INSPECTION USING OSCILLOSCOPE

- With the engine racing (4,000 rpm), check the waveform between terminal KNK of the ECM connector and body ground.

HINT:
The correct waveform is as shown.

- Spread the time on the horizontal axis, and confirm that period of the wave is 0.151 msec. (Normal mode vibration frequency of knock sensor: 6.6 kHz).

HINT:
If normal mode vibration frequency is not 6.6 kHz the sensor malfunctions or ECM (terminal KNK).

OK	**Go to step 3.**

NG

2	**Check knock sensor (See page SF–49).**

NG	**Replace knock sensor.**

OK

3	**Check for open and short in harness and connector between ECM and knock sensor (See page IN–28).**

NG	**Repair or replace harness or connector.**

OK

4	Does malfunction disappear when good knock sensor is installed?

YES → Replace knock sensor.

NO → Check and replace ECM (See page IN–28).

DIB2E–01

DTC	P0335	Crankshaft Position Sensor ”A” Circuit

DTC	P0339	Crankshaft Position Sensor ”A” Circuit Intermittent

CIRCUIT DESCRIPTION

Crankshaft position sensor (NE signal) consists of a magnet, iron core and pickup coil.
The NE signal plate has 34 teeth and is mounted on the crankshaft. The NE signal sensor generates 34 signals at every engine revolution. The engine ECM detects the crankshaft angle and the engine speed based on the NE signals, and idetify the cylinder on the G2 (Camshaft position sensor) and NE signals.

DTC No.	DTC Detection Condition	Trouble Area
P0335	No crankshaft position sensor signal to ECM during cranking (2 trip detection logic)	• Open or short in crankshaft position sensor circuit • Crankshaft position sensor • Signal plate (Crankshaft position sensor rotor) • ECM
	No crankshaft position sensor signal to ECM with engine speed 600 rpm or more (2 trip detection logic)	
P0339	In condition (a), (b) and (c), when no crankshaft position sensor (NE) signal is input for 0.05 sec. or more. (a) Engine revolution 1,000 rpm or more (b) STA signal is OFF (c) 3 sec. or more has been lapsed after STA signal is switched from ON to OFF.	

WIRING DIAGRAM

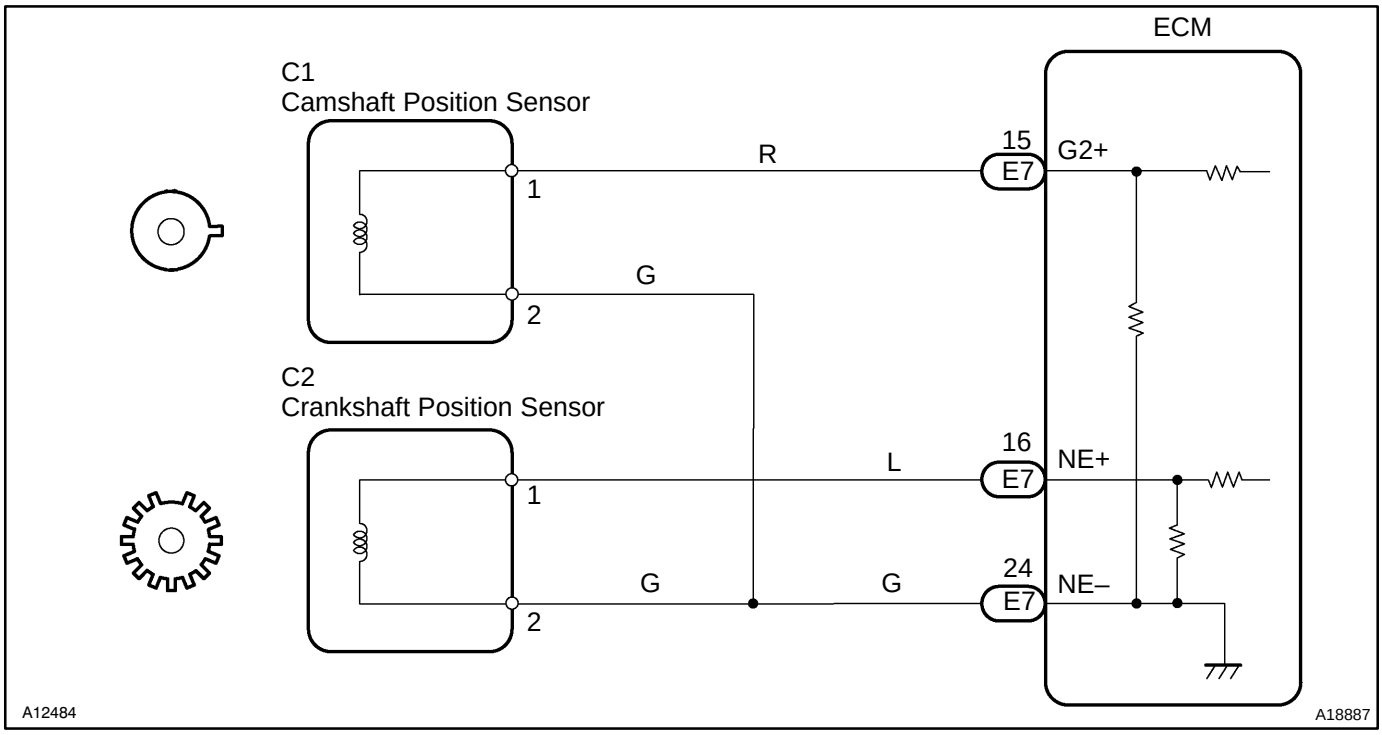

INSPECTION PROCEDURE

HINT:

- Perform troubleshooting of DTC P0335 first. If no trouble is found, troubleshoot the following mechanical system.
- Read freeze frame data using the hand–held tester or the OBD II scan tool, as freeze frame data records the engine conditions when a malfunction is detected. When troubleshooting, it is useful for determining whether the vehicle was running or stopped, the engine was warmed up or not, the air–fuel ratio was lean or rich, etc. at the time of the malfunction.

1	**Check resistance of crankshaft position sensor (See page IG–1).**

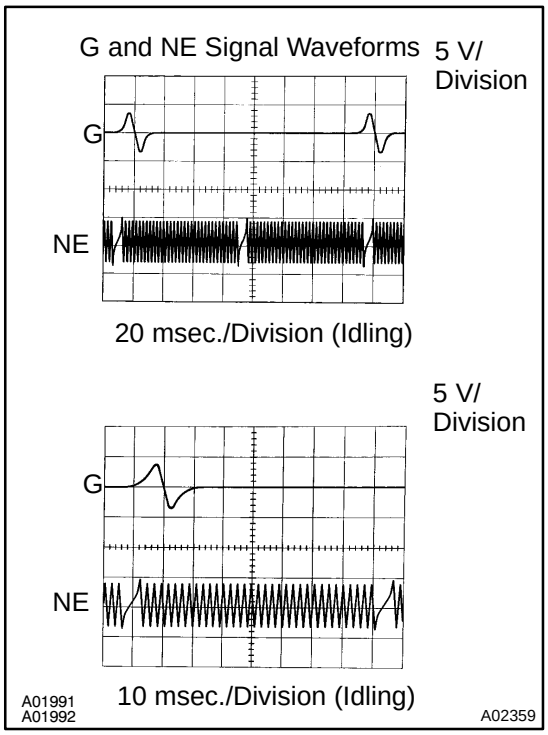

Reference: INSPECTION USING OSCILLOSCOPE

During cranking or idling, check the waveforms between terminals G2+ and NE–, and NE+ and NE– of the ECM connector.

HINT:

The correct waveforms are as shown.

NG → **Replace crankshaft position sensor.**

OK

2	**Check for open and short in harness and connector between ECM and crankshaft position sensor (See page IN–28).**

NG → **Repair or replace harness or connector.**

OK

3	**Inspect sensor installation and teeth of signal plate.**

NG → **Tighten sensor. Replace signal plate.**

OK

Check and replace ECM (See page IN–28).

DTC	P0340	Camshaft Position Sensor ”A” Circuit (Bank 1 or Single Sensor)

DTC	P0341	Camshaft Position Sensor ”A” Circuit Range/Performance (Single Sensor)

CIRCUIT DESCRIPTION

The camshaft position sensor (G2 signal) consists of a magnet, iron core and pickup coil.
The G2 signal plate has 1 tooth on its outer circumference and is mounted on the intake camshaft.
When the camshafts rotate, the protrusion on the signal plate and the air gap on the pickup coil change, causing fluctuations in the magnetic field and generating an electromotive force in the pickup coil.
The NE signal plate has 34 teeth and is mounted on the crankshaft timing pulley. The NE signal sensor generates 34 signals at every engine revolution. The engine ECM detects the crankshaft angle and the engine speed based on the NE signals, and idetify the cylinder on the G2 (Camshaft position sensor) and NE signals.

DTC No.	DTC Detection Condition	Trouble Area
P0340	No camshaft position sensor signal to ECM during cranking (2 trip detection logic)	• Open or short in camshaft position sensor circuit • Camshaft position sensor • Camshaft • Jumping teeth of timing chain • ECM
	No camshaft position sensor signal to ECM with engine speed 600 rpm or more (1 trip detection logic)	
P0341	While crankshaft rotates twice, camshaft position sensor signal will be input to ECM 12 times or more (1 trip detection logic)	

HINT:

- DTC P0340 indicate a malfunction related to the camshaft position sensor (+) circuit. (Wire harness (ECM camshaft position sensor) and camshaft position sensor)
- DTC P0341 indicate a malfunction related to the camshaft position sensor (–) circuit. (Wire harness (ECM camshaft position sensor) and camshaft position sensor)

WIRING DIAGRAM

Refer to DTC P0335 and P0339 on page DI–90.

INSPECTION PROCEDURE

HINT:
Read freeze frame data using the hand–held tester or the OBDII scan tool, as freeze frame records the engine conditions when a malfunction is detected. When troubleshooting, it is useful for determining whether the vehicle was running or stopped, the engine was warmed up or not, the air–fuel ratio was lean or rich, etc. at the time of the malfunction.

1	**Check resistance of camshaft position sensor (See page IG–1).**

Reference: INSPECTION USING OSCILLOSCOPE
Refer to DTC P0335 and P0339 on page DI–90.

NG → **Replace camshaft position sensor.**

OK

2	**Check for open and short in harness and connector between ECM and camshaft position sensor (See page IN–28).**

NG → **Repair or replace harness or connector.**

OK

3	**Inspect sensor installation (See page EM–55) and tooth of intake camshaft (See page EM–12).**

NG → **Tighten sensor. Replace intake camshaft.**

OK

Check and replace ECM (See page IN–28).

DTC	P0401	Exhaust Gas Recirculation Flow Insufficient Detected (Only for 3RZ–FE)

CIRCUIT DESCRIPTION

The EGR system recirculates exhaust gas, which is controlled to the proper quantity to suit the driving conditions, into the intake air mixture to slow down combustion, reduce the combustion temperature and reduce NOx emissions. The amount of EGR is regulated by the EGR vacuum modulator according to the engine load.

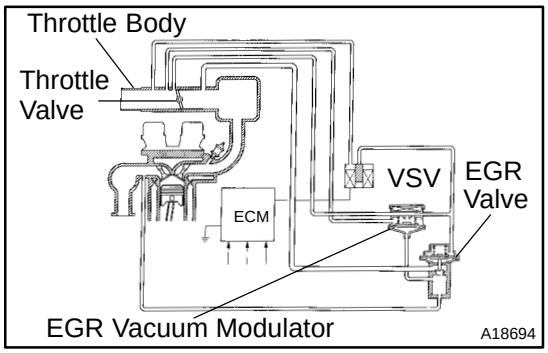

If even one of the following conditions is fulfilled, the VSV is turned ON by a signal from the ECM.
This results in atmospheric air acting on the EGR valve, closing the EGR valve and shutting off the exhaust gas (EGR cut–off). Under the following conditions, EGR is cut to maintain driveability.

- Before the engine is warmed up.
- During deceleration (throttle valve closed).
- Light engine load (amount of intake air very small).
- Engine racing.

DTC No.	DTC Detection Condition	Trouble Area
P0401	After engine is warmed up and run at 80 km/h (50 mph) for 3 to 5 minutes, small difference between value of EGR gas temp. sensor and ambient air temp. (2 trip detection logic)	• Open in EGR gas temp. sensor circuit • EGR gas temp. sensor • Vacuum or EGR hose disconnected • Open or short in VSV circuit for EGR • VSV for EGR • EGR system • EGR vacuum modulator • EGR valve stuck closed • ECM

WIRING DIAGRAM

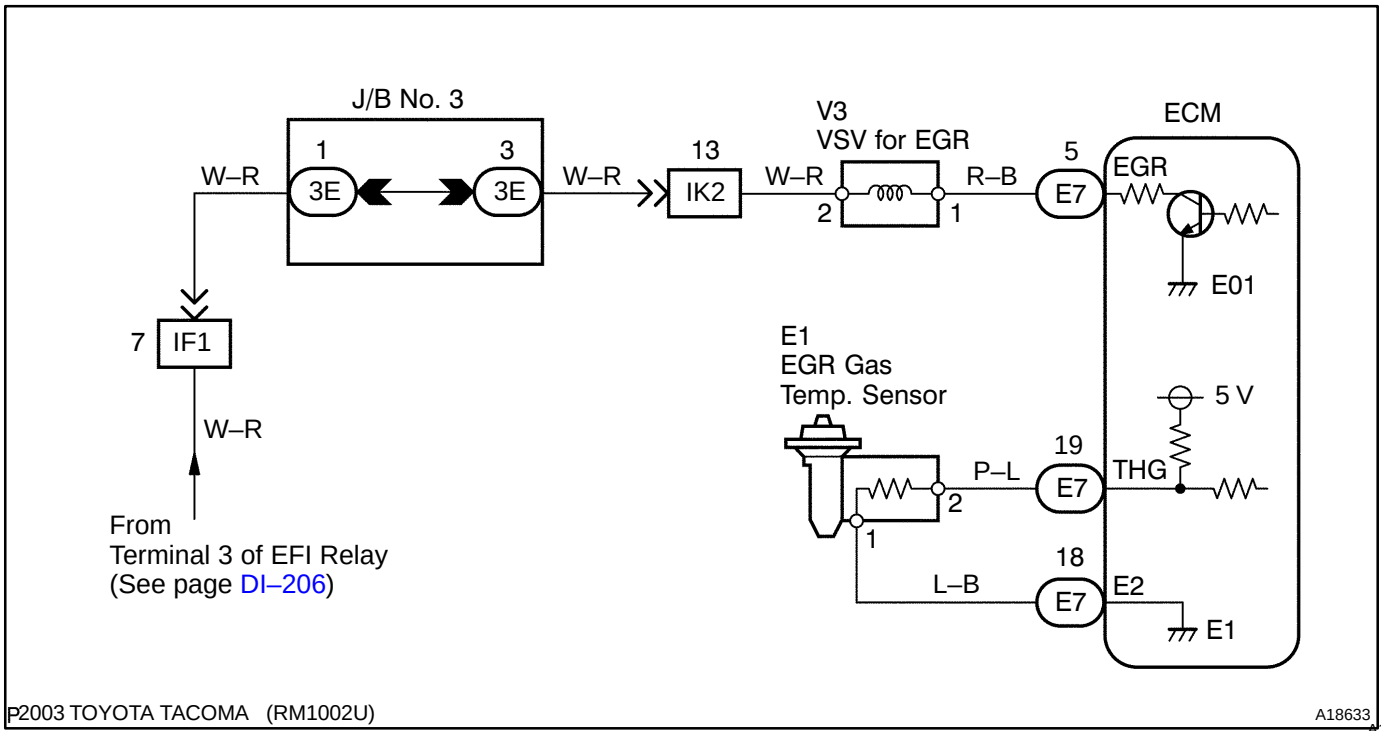

SYSTEM CHECK DRIVING PATTERN

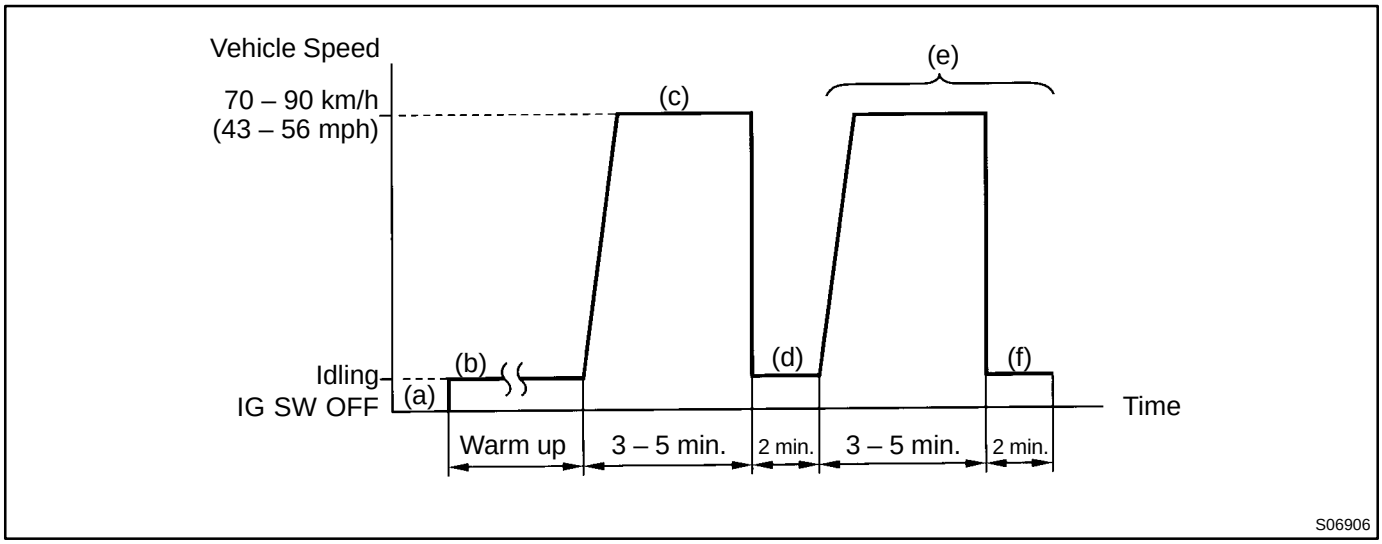

(a) Connect the hand–held tester or OBD II scan tool to the DLC3.
(b) Start and warm up the engine with all the accessories switched OFF.
(c) Run the vehicle at 70 – 90 km/h (43 – 56 mph) for 3 minutes or more.
(d) Idle the engine for about 2 minutes.
(e) Do steps (c) and (d) again.
(f) Check the READINESS TESTS mode on the hand–held tester or OBD II scan tool.

If COMPL is displayed and the MIL does not light up, the system is normal.
If INCMPL is displayed and the MIL does not light up, run the vehicle step (e) from some times and check it.
HINT:
INCMPL is displayed when either condition (1) or (2) exists.
(1) The system check is incomplete.
(2) There is a malfunction in the system.
If there is a malfunction in the system, the MIL will light up after steps (b) to (e) above are done (2 trip detection logic).

INSPECTION PROCEDURE

HINT:
Read freeze frame data using hand–held tester or OBD II scan tool, as freeze frame data records the engine conditions when a malfunction is detected. When troubleshooting, it is useful for determining whether the vehicle was running or stopped, the engine was warmed up or not, the air–fuel ratio was lean or rich, etc. at the time of the malfunction.

Hand–held tester:

1	**Connect hand–held tester, and read value of EGR gas temperature value.**

PREPARATION:

(a) Connect the hand–held tester to the DLC3.
(b) Turn the ignition switch ON and push the hand–held tester main switch ON.
(c) Select the item ”DIAGNOSIS/ENHANCED OBD II/DATA LIST/ALL/EGR GAS”.

CHECK:

Read the EGR gas temperature on the hand–held tester.

OK:

EGR gas temperature: 10˚C (50˚F) or more

HINT:

If there is an open circuit, the hand–held tester indicates 3.1˚C (37.6˚F).

OK → **Go to step 4.**

NG

2	**Check for open in harness or ECM.**

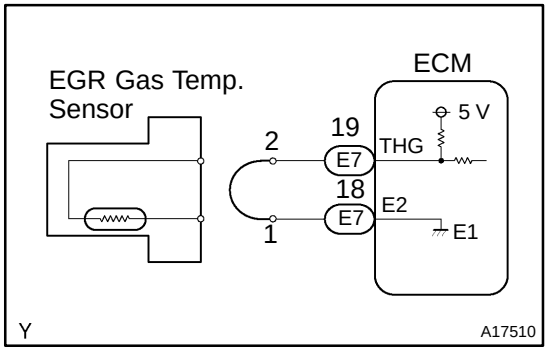

PREPARATION:

(a) Disconnect the EGR gas temperature sensor connector.
(b) Connect the sensor wire harness terminals together.
(c) Turn the ignition switch ON.

CHECK:

Read the EGR gas temperature on the hand–held tester.

OK:

EGR gas temperature: 159.3˚C (318.7˚F)

OK → **Confirm good connection at sensor. If OK, replace EGR gas temperature sensor.**

NG

3	Check for open in harness or ECM.

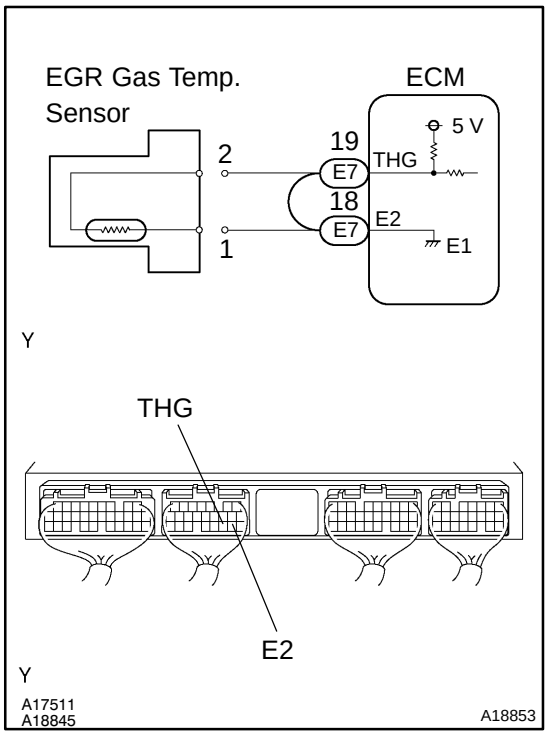

PREPARATION:

(a) Remove the glove compartment (See page SF–55).

(b) Connect between terminals THG and E2 of the ECM connector.

HINT:

The EGR gas temperature sensor connector is disconnected. Before checking, do a visual check and contact pressure check for the ECM connector (See page IN–28).

CHECK:

Read the EGR gas temperature on the hand–held tester.

OK:

EGR gas temperature: 159.3˚C (318.7˚F)

OK	Open in harness between terminal E2 or THG. Repair or replace harness.

NG

Confirm connection at ECM. If OK, replace ECM.

4	Check connection of vacuum hose and EGR hose (See page EC–6).

NG	Repair or replace.

OK

5	Check VSV for EGR.

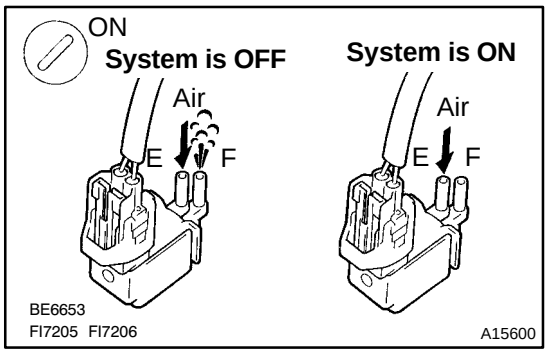

PREPARATION:
Select the item ”DIAGNOSIS/ENHANCED OBD II/DATA LIST/ ALL/EGR STSTEM”.
CHECK:
Check the operation of the VSV when it is operated by the hand–held tester.
OK:

EGR system is OFF:
Air from port E flows out through port F.
EGR system is ON:
Air does not flow from port E to port F.

OK → **Go to step 7.**

NG

6	Check operation of VSV for EGR (See page SF–41).

NG → **Replace VSV for EGR.**

OK

Check for short in harness and connector between VSV for EGR and ECM (See page IN–28).

7	Check EGR system (See page EC–13).

NG → **Repair or replace.**

OK

8	**Check EGR vacuum modulator (See page EC–13).**

NG → **Repair or replace.**

OK

9	**Check EGR valve (See page EC–13).**

NG → **Repair or replace.**

OK

10	**Check value of EGR gas temperature sensor.**

PREPARATION:

(a) Connect the hand–held tester to the DLC3.
(b) Turn the ignition switch ON and push the hand–held tester main switch ON.
(c) Select the item ”DIAGNOSIS/ENHANCED OBD II/DATA LIST/ALL/EGR STSTEM”.
(d) Race the engine at 4,000 rpm for 3 minutes.

CHECK:

Measure the EGR gas temperature while racing the engine at 4,000 rpm.

OK:

EGR gas temperature after 3 minutes: 100˚C (212˚F) or more

NG → **Replace EGR gas temperature sensor.**

OK

Check and replace ECM (See page IN–28).

OBD II scan tool (excluding hand–held tester):

1	**Check resistance of EGR gas temperature sensor.**

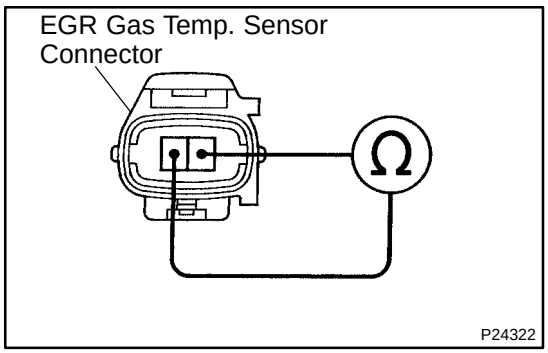

PREPARATION:
Disconnect the EGR gas temperature sensor connector.
CHECK:
Measure the resistance between terminals of the EGR gas temperature sensor connector.
OK:
Resistance: 600 kΩ or less
HINT:
If there is open circuit, ohmmeter indicates 720 kΩ or more.

NG	**Check and replace EGR gas temperature sensor (See page EC–13).**

OK

2	**Check for open in harness or ECM.**

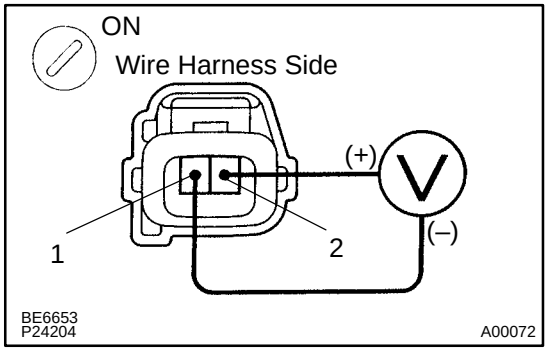

PREPARATION:
(a) Disconnect the EGR gas temperature sensor connector.
(b) Turn the ignition switch ON.
CHECK:
Measure the voltage between terminals of the EGR gas temperature sensor wire harness side connector.
OK:
Voltage: 4.5 – 5.5 V

OK	**Go to step 4.**

NG

3	Check for open in harness or ECM.

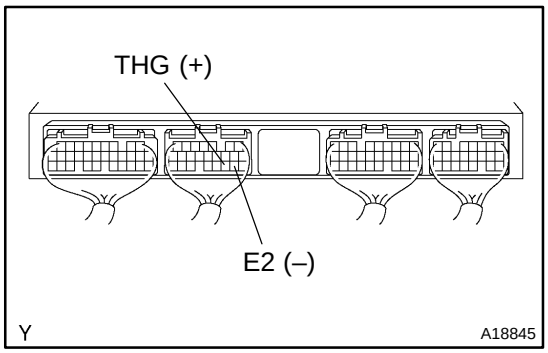

PREPARATION:

(a) Remove the glove compartment (See page SF–55).

(b) Turn the ignition switch ON.

CHECK:

Measure the voltage between terminals of THG and E2 of the ECM connector.

HINT:

The EGR gas temperature sensor connector is disconnected.

OK:

Voltage: 4.5 – 5.5 V

OK	Open in harness between terminals E2 or THG. Repair or replace harness.

NG

Confirm connection at ECM. If OK, replace ECM.

4	Check connection of vacuum hose and EGR hose (See page EC–6).

NG	Repair or replace.

OK

5	Check VSV for EGR.

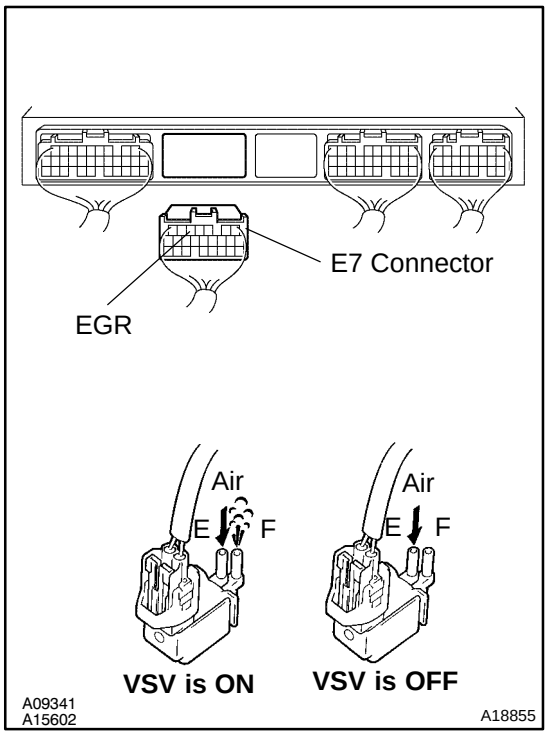

PREPARATION:

(a) Remove the glove compartment (See page SF–55).
(b) Disconnect the E7 connector from the ECM.
(c) Turn the ignition switch ON.

CHECK:

Check the VSV function.

(1) Connect terminal EGR of the ECM connector and the body ground (ON).
(2) Disconnect terminal EGR of ECM connector and the body ground (OFF).

OK:

(1) VSV is ON:
Air from port E flows out through port F.
(2) VSV is OFF:
Air does not flow from port E to port F.

OK	Go to step 7.

NG

6	Check operation for VSV for EGR (See page SF–41).

NG	Replace VSV for EGR.

OK

Check for open in harness and connector between VSV for EGR and ECM (See page IN–28).

7	Check EGR system (See page EC–13).

NG	Repair or replace.

OK

8	**Check EGR vacuum modulator (See page EC–13).**

NG → **Repair or replace.**

OK

9	**Check EGR valve (See page EC–13).**

NG → **Repair or replace.**

OK

10	**Check resistance of EGR gas temperature sensor.**

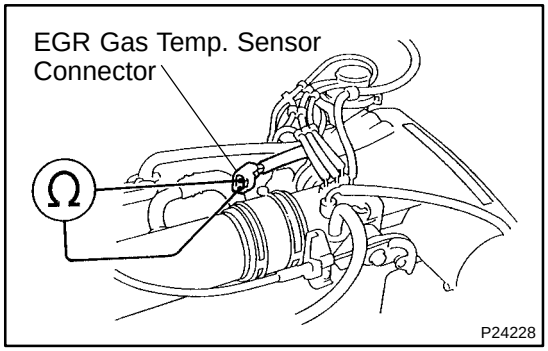

PREPARATION:

(a) Disconnect the EGR gas temperature sensor connector.
(b) Start the engine and warm it up.
(c) Disconnect the VSV connector for the EGR.
(d) Race the engine at 4,000 rpm for 3 min.

CHECK:

Measure the resistance of the EGR gas temperature sensor while racing the engine at 4,000 rpm.

OK:

Resistance of EGR gas temperature sensor after 3 min.: 4.3 kΩ or less

HINT:

188.6 – 439.0 kΩ for resistance at 20˚C (68˚F)

NG → **Replace EGR gas temperature sensor.**

OK

Check and replace ECM (See page IN–28).

DTC	P0402	Exhaust Gas Recirculation Flow Excessive Detected (Only for 3RZ–FE)

CIRCUIT DESCRIPTION

Refer to DTC P0401 on page DI–101.

DTC No..	DTC Detection Condition	Trouble Area
P0402	EGR gas temp. sensor value is high during EGR cut–off when engine is cold and vacuum is applied to port E (2 trip detection logic)	• Short in EGR gas temp. sensor circuit • EGR gas temp. sensor • Open in VSV circuit for EGR • VSV for EGR • EGR valve stuck open • ECM
	EGR valve is always open (2 trip detection logic)	

WIRING DIAGRAM

Refer to DTC P0401 on page DI–101.

SYSTEM CHECK DRIVING PATTERN

Refer to DTC P0401 on page DI–101.

INSPECTION PROCEDURE

HINT:

Read freeze frame data using the hand–held tester or the OBD II scan tool, as freeze frame data records the engine conditions when a malfunction is detected. When troubleshooting, it is useful for determining whether the vehicle was running or stopped, the engine was warmed up or not, the air–fuel ratio was lean or rich, etc. at the time of the malfunction.

Hand–held tester:

1	**Connect hand–held tester, and read EGR gas temperature value.**

PREPARATION:

(a) Connect the hand–held tester to the DLC3.
(b) Turn the ignition switch ON and push the hand–held tester main switch ON.
(c) Select the item ”DIAGNOSIS/ENHANCED OBD II/DATA LIST/ALL DATA/EGR GAS”.

CHECK:

Read the EGR gas temperature on the hand–held tester.

OK:

EGR gas temperature: 150˚C (302˚F) or less (Not immediately after driving)

HINT:

If there is a short circuit, the hand–held tester indicates 159.3˚C (318.7˚F).

OK	**Go to step 4.**

NG

2	Check for short in harness and ECM.

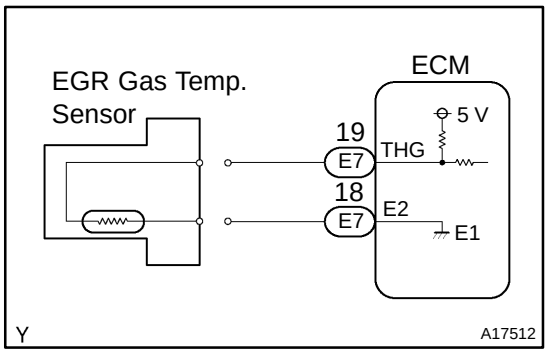

PREPARATION:
Disconnect the EGR gas temperature sensor connector.
CHECK:
Read the EGR gas temperature on the hand–held tester.
OK:
EGR gas temperature: 3.1˚C (37.6˚F)

OK	Replace EGR gas temperature sensor.

NG

3	Check for short in harness or ECM.

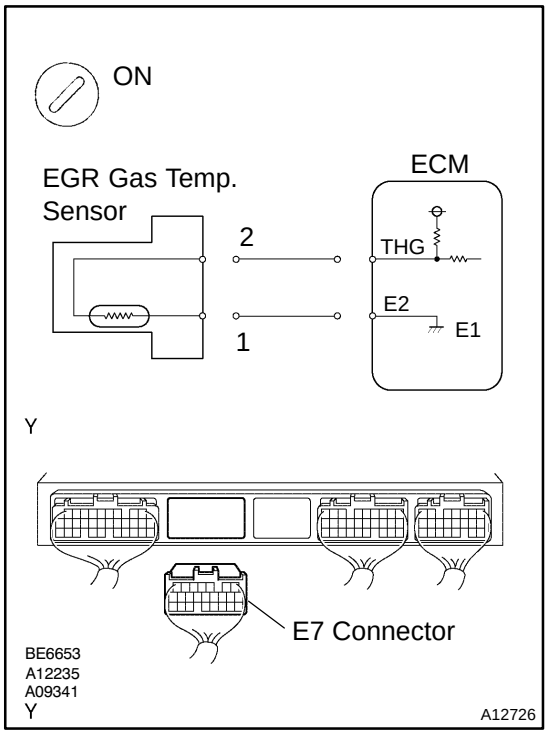

PREPARATION:
(a) Remove the glove compartment (See page SF–55).
(b) Disconnect the E7 connector from the ECM.
HINT:
The EGR gas temperature sensor is disconnected.
CHECK:
Read the EGR gas temperature on the hand–held tester.
OK:
EGR gas temperature: 3.1˚C (37.6˚F)

OK	Repair or replace harness or connector.

NG

Check and replace ECM (See page IN–28).

4	Check VSV for EGR (See page DI–101, step 5).

OK → Check EGR valve (See page EC–13).

NG

5	Check operation of VSV for EGR (See page SF–41).

NG → Replace VSV for EGR.

OK

Check for open in harness and connector between VSV for EGR and ECM (See page IN–28).

OBD II scan tool (excluding hand–held tester):

1	Check resistance of EGR gas temperature sensor.

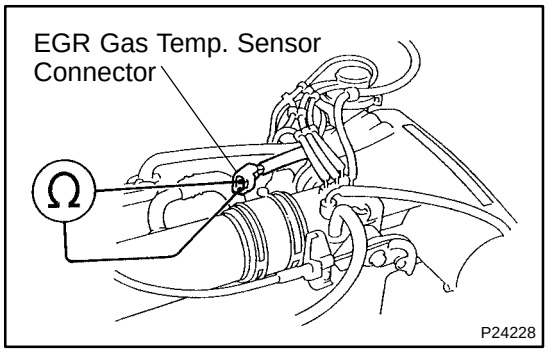

PREPARATION:
Disconnect the EGR gas temperature sensor connector.
CHECK:
Measure the resistance between terminals of the EGR gas temperature sensor connector.
OK:
Resistance:
2.5 kΩ or more (Not immediately after driving)
HINT:
If there is short circuit, ohmmeter indicates 200 Ω or less.

NG → Replace EGR gas temperature sensor.

OK

2	Check for short in harness and connector EGR gas temperature sensor and ECM (See page IN–28).

NG → Repair or replace harness or connector.

OK ↓

3	Check VSV for EGR (See page DI–101 step 5).

OK → Check EGR valve (See page EC–13).

NG ↓

4	Check operation of VSV for EGR (See page EC–13).

NG → Replace VSV for EGR.

OK ↓

5	Check for open in harness and connector between VSV for EGR and ECM (See page IN–28).

NG → Repair or replace harness or connector.

OK ↓

Check and replace ECM (See page IN–28).

DTC	P0420	Catalyst System Efficiency Below Threshold (Bank 1)

CIRCUIT DESCRIPTION

The ECM observes the waveform of the heated oxygen sensor located behind the catalyst to determine whether the catalyst is performance has deteriorated. If the catalyst is functioning normally, the waveform of the heated oxygen sensor located behind the catalyst switches back and forth between rich and lean much more slowly. When the waveform of the heated oxygen sensor located behind the catalyst alternates flatteringly between rich and lean, it indicates that catalyst performance has deteriorated.

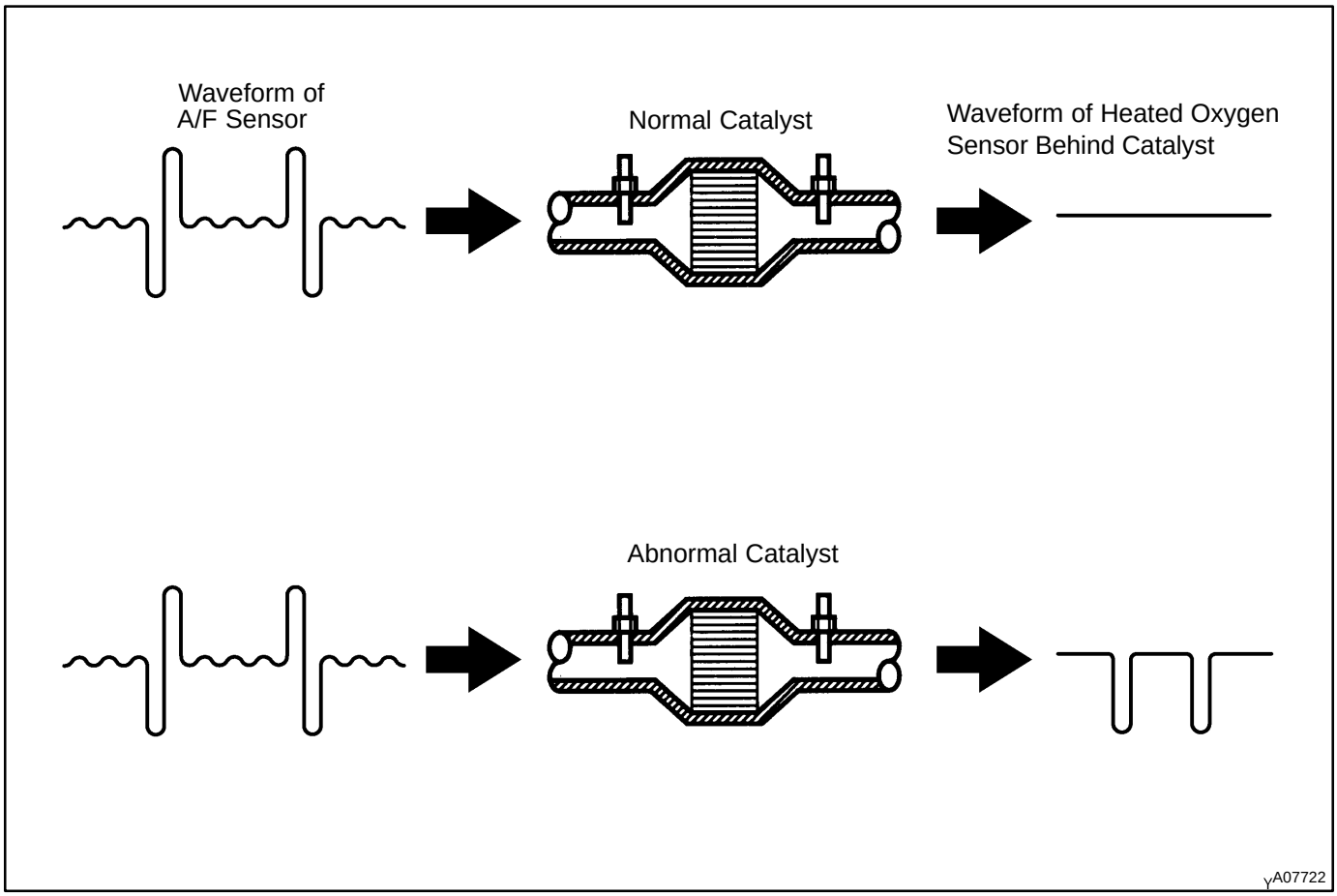

DTC No.	DTC Detection Condition	Trouble Area
P0420	After engine and catalyst are warmed up, and while vehicle is driven within set vehicle and engine speed range, waveform of heated oxygen sensor (bank 1 sensor 2) alternates flatteringly between rich and lean (2 trip detection logic)	• Gas leakage on exhaust system • A/F sensor (bank 1 sensor 1) • Heated oxygen sensor (bank 1 sensor 2) • Three–way catalytic converter

CONFIRMATION ENGINE RACING PATTERN

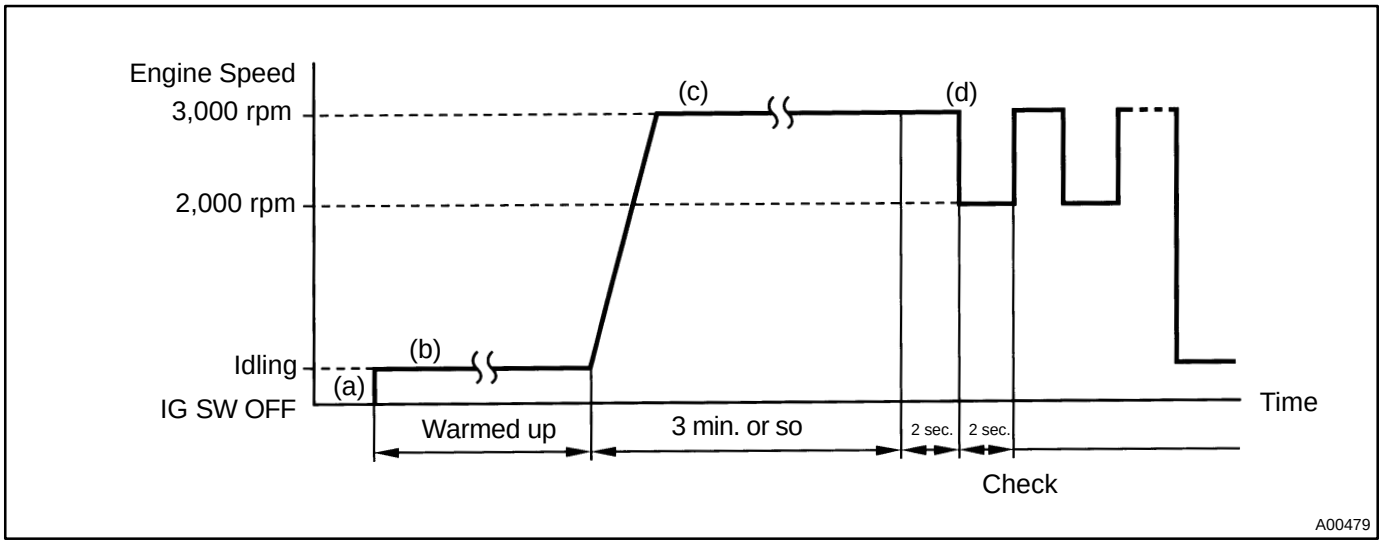

(a) Connect the hand–held tester or OBD II scan tool to the DLC3.
(b) Start the engine and warm it up with all the accessories switched OFF until the water temperature is stable.
(c) Race the engine at 2,500 – 3,000 rpm for about 3 minutes.
(d) When racing the engine at 3,000 rpm for 2 seconds and 2,000 rpm for 2 seconds alternately, check the waveform of the heated oxygen sensor (bank 1 sensor 2).

INSPECTION PROCEDURE

HINT:
Read freeze frame data using the hand–held tester or the OBD II scan tool, as freeze frame data records the engine conditions when a malfunction is detected. When troubleshooting, it is useful for determining whether the vehicle was running or stopped, the engine was warmed up or not, the air–fuel ratio was lean or rich, etc. at the time of the malfunction.

1	**Are there any other codes (besides DTC P0420) being output?**

YES → **Go to relevant DTC chart (See page DI–16).**

NO

2	**Check gas leakage on exhaust system.**

NG → **Repair or replace.**

OK

3	Check A/F sensor (bank 1 sensor 1) (See page SF–51).

NG → Repair or replace.

OK

4	Check heated oxygen sensor (bank 1 sensor 2) (See page SF–54).

NG → Repair or replace.

OK

Replace three–way catalytic converter.

DTC	P0441	Evaporative Emission Control System Incorrect Purge Flow

DTC	P0446	Evaporative Emission Control System Vent Control Circuit

CIRCUIT DESCRIPTION

The vapor pressure sensor, VSV for EVAP, VSV for canister closed valve (CCV) and VSV for pressure switching valve are used to detect abnormalities in the evaporative emission control system.

The ECM decides whether there is an abnormality in the evaporative emission control system based on the vapor pressure sensor signal.

DTCs P0441 and P0446 are recorded by the ECM when there is a malfunction in either the VSV for EVAP, the VSV for pressure switching valve, or in the vapor pressure sensor itself, or when evaporative emissions leak from the components within the dotted line in Fig. 1 below.

Fig. 1

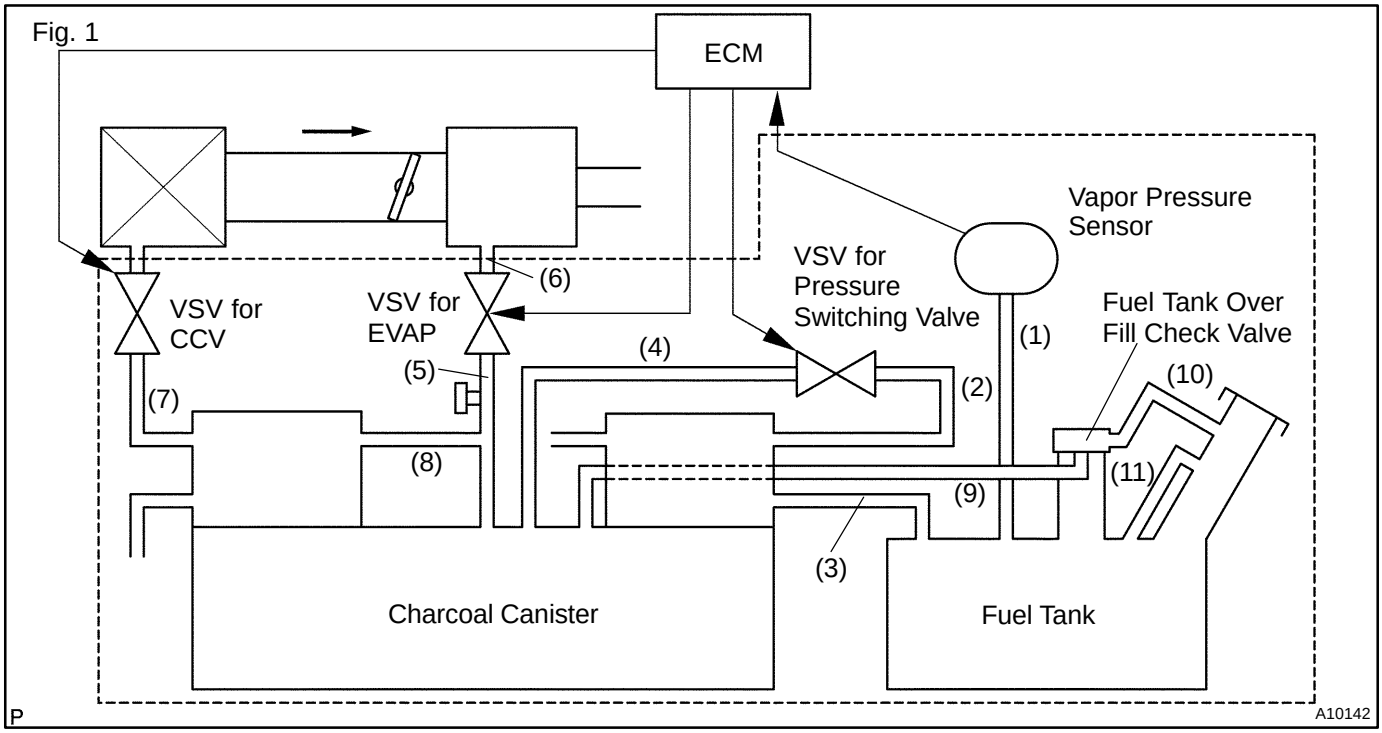

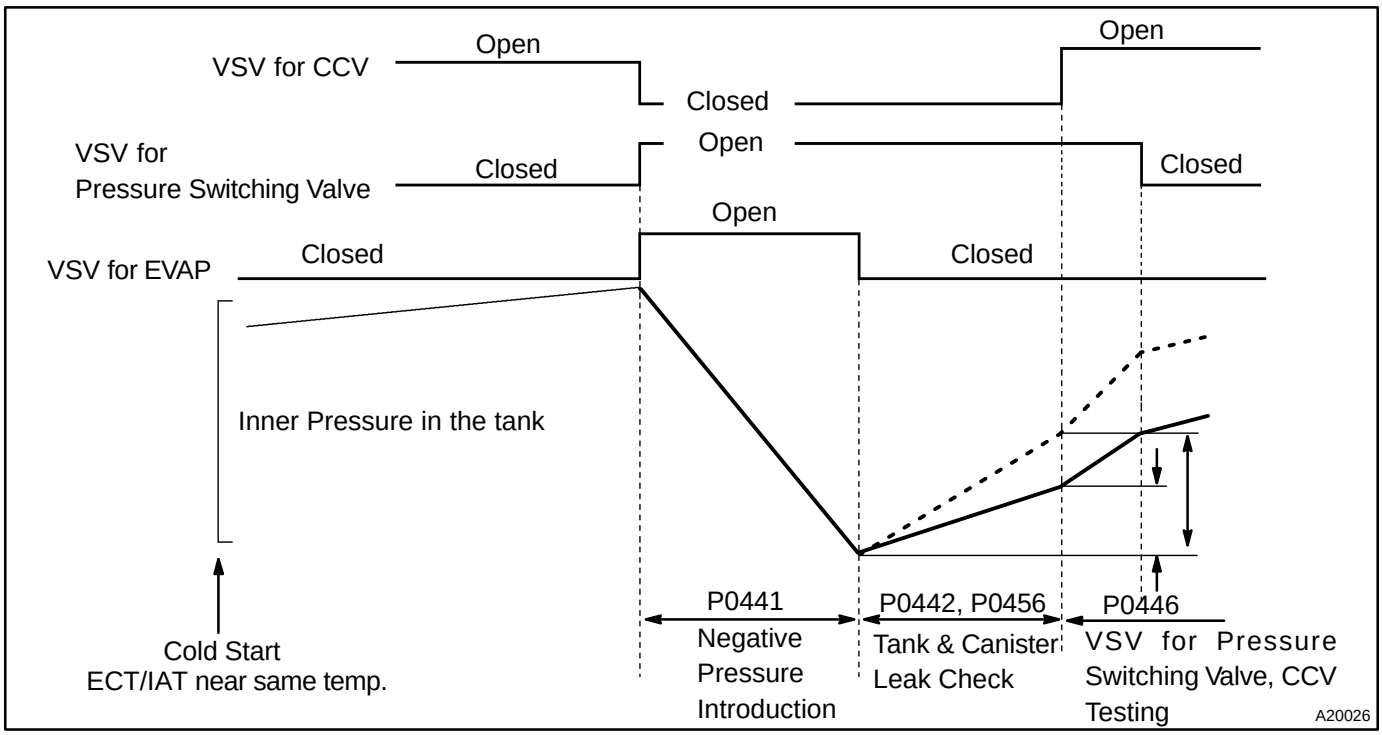

P0441

The ECM closes the CCV and opens the VSV for pressure switching valve causing vacuum to increase in the entire EVAP system.

The ECM continues to operate the VSV for EVAP until the vacuum is increased to a specified point at which time the ECM closes the VSV for EVAP.

If the vacuum did not increase, or if the vacuum increased beyond the specified limit, the ECM judges the VSV for EVAP and related components to be faulty.

P0446

When the vapor pressure rises to a specified point, the ECM opens the VSV for CCV. Pressure will increase rapidly because of the air allowed into the system. No increase or an increase below specified rate of pressure increase indicates a restriction on the air inlet side.

The ECM closes the VSV for pressure switching valve. This action blocks air entering the fuel tank side of system. The pressure rise on the fuel tank side is no longer as great.

If there was no change in pressure, the ECM will conclude the VSV for pressure switching valve did not close.

DTC No.	DTC Detecting Condition	Trouble Area
P0441	Pressure in charcoal canister and fuel tank does not drop during purge control (2 trip detection logic)	• Fuel tank cap incorrectly installed • Fuel tank cap cracked or damaged • Vacuum hose cracks, holed blocked, damaged or disconnected ((1), (2), (3), (4), (5), (6), (7), (8), (9), (10) and (11) in Fig. 1) • Open or short in vapor pressure sensor circuit • Vapor pressure sensor • Open or short in VSV circuit for EVAP • VSV for EVAP • Open or short in VSV circuit for CCV • VSV for CCV • Open or short in VSV circuit for pressure switching valve • VSV for pressure switching valve • Fuel tank cracked, holed or damaged • Charcoal canister cracked, holed or damaged • Fuel tank over fill check valve cracked or damaged • ECM
	During purge cut–off, negative pressure incoming in the charcoal canister and fuel tank will not stop. (2 trip detection logic)	
P0446	When VSV for pressure switching valve is ON, ECM judges that there is no continuity between vapor pressure sensor, fuel tank and charcoal canister (2 trip detection logic)	
	When VSV for pressure switching valve is turned OFF, pressure in fuel tank is maintained at atmospheric pressure (2 trip detection logic)	
	When VSV for CCV is ON, pressure in charcoal canister and fuel tank is maintained at atmospheric pressure (2 trip detection logic)	

HINT:

Typical DTC output of each trouble part

Trouble part		Typical DTC output (*1)
Small Leak		P0442 and/or P0456
Medium Leak (ex: Vacuum hose loose)		P0442
Large Leak (ex: Fuel tank cap loose)		P0441 and P0442 and P0446
VSV for EVAP	Open Malfunction	P0441
	Close Malfunction	P0441 and P0442 and P0446
VSV for CCV	Open Malfunction	P0441 and P0442 and P0446
	Close Malfunction	P0446
VSV for Pressure Switching	Open Malfunction	P0446
	Close Malfunction	P0441 and P0442 and P0446

*1: ECM may output some other DTC combination.

WIRING DIAGRAM

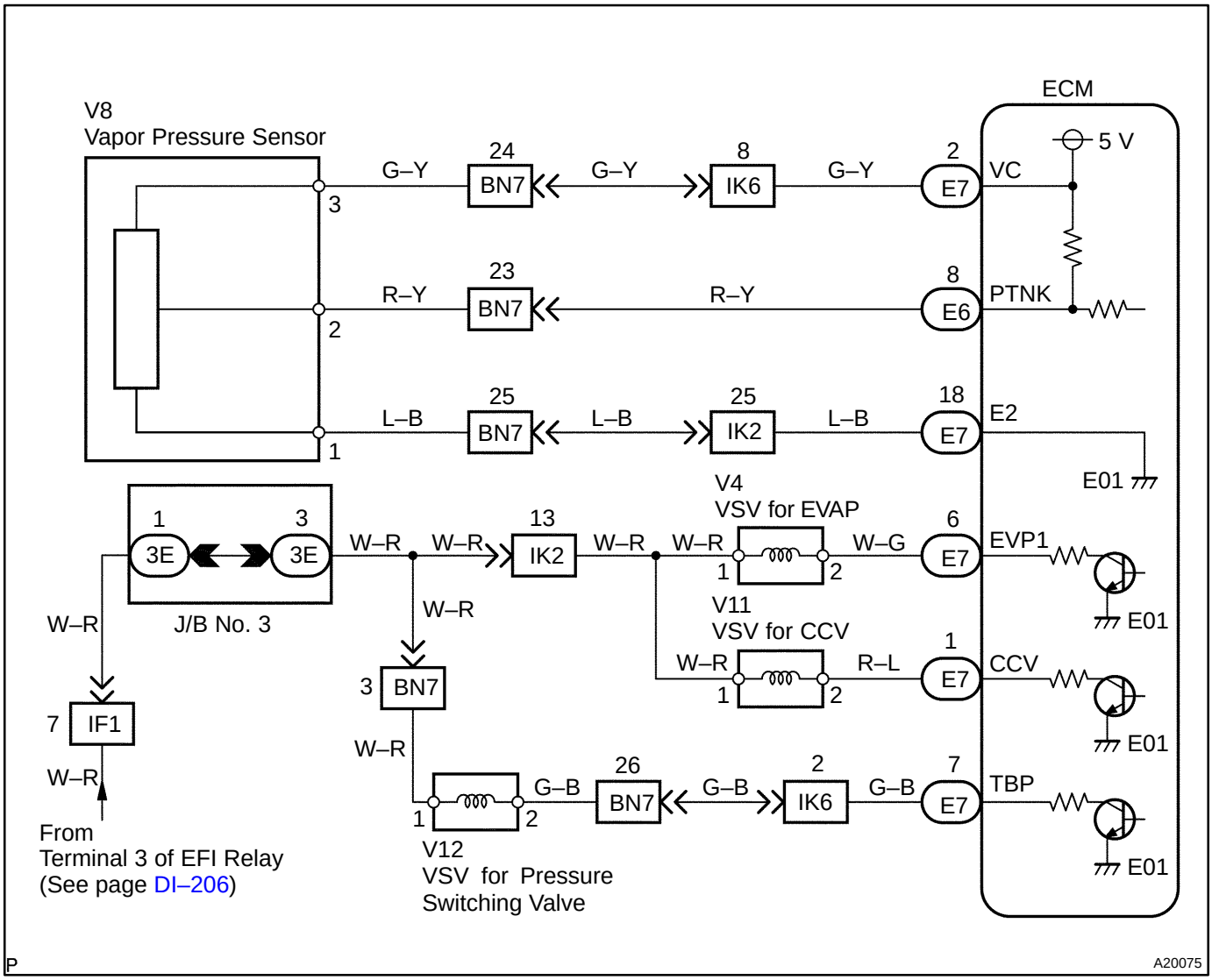

INSPECTION PROCEDURE

HINT:

- If DTC P0441 (Purge Flow), P0446 (VSV for CCV or VSV for Pressure switching valve), P0450 or P0451 (Evaporative Pressure Sensor) is output with DTC P0442 or P0456, first troubleshoot DTC P0441, P0446, P0450 or P0451. If no malfunction is detected, troubleshoot DTC P0442 or P0456 next.
- Read freeze frame data using the OBD II scan tool or the hand–held tester. Because freeze frame records the engine conditions when a malfunction is detected. When troubleshooting, it is useful for determining whether the vehicle was running or stopped, the engine was warmed up or not, the air–fuel ratio was lean or rich, etc. at the time of the malfunction.
- When the ENGINE RUN TIME in the freeze frame data is less than 200 seconds, carefully check the vapor pressure sensor.

Hand–held tester:

1	**Perform EVAP leak test.**

PREPARATION:

(a) Connect the hand–held tester to the DLC3.
(b) Select the item ”DIAGNOSIS/ENHANCED OBD II/SYSTEM CHECK/EVAP SYS CHECK (or EVAP LEAK TEST)” mode on the hand–held tester.
(c) Perform ”EVAP SYS CHECK (or EVAP LEAK TEST)”.

CHECK:

Display on the Hand–held tester	Proceed to
Scan tool detects a leak on the fuel tank side.	A
Scan tool detects a leak on the canister side.	B
Scan tool doesn’t detects a leak on the EVAP system.	C

If any changes do not occur with in 1 minute after pressing ”EVAP LEAK TEST”, once remove the fuel tank cap, then set the fuel tank cap again. Then perform the ”EVAP LEAK TEST”.

B → **Go to step 24.**

C → **Go to step 42.**

A

2	**Check that fuel tank cap is TOYOTA genuine parts.**

NG → **Replace to TOYOTA genuine parts.**

OK

3	**Check that fuel tank cap is correctly installed.**

NG → **Correctly install fuel tank cap.**

OK

4	**Check fuel tank cap (See page EC–8).**

NG → **Replace fuel tank cap.**

OK

5	**Check filler neck for damage.**

PREPARATION:
Remove the fuel tank cap.
CHECK:
Visually inspect the filler neck for damage.

NG → **Replace filler pipe.**

OK

6	**Check purge flow.**

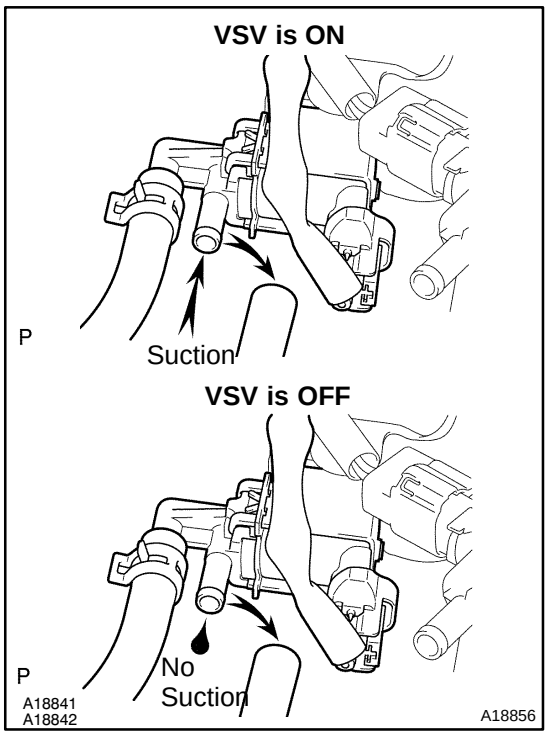

PREPARATION:
(a) Connect the hand–held tester to the DLC3.
(b) Select the item ”DIAGNOSIS/ENHANCED OBD II/ACTIVE TEST” mode on the hand–held tester.
(c) Disconnect the vacuum hose for the VSV for the EVAP from the charcoal canister.
(d) Start the engine.
(e) Select the item ”EVAP VSV (ALON)/ALL” in the ACTIVE TEST and operate EVAP VSV (Press the ← or → button).

CHECK:
When the VSV for the EVAP is operated by the hand–held tester, check whether the disconnected hose applies suction to your finger.

OK:

VSV is ON:
Disconnected hose applies suction to your finger.
VSV is OFF:
Disconnected hose applies no suction to your finger.

OK → Go to step 10.

NG

7	**Check vacuum hose between intake manifold and VSV for EVAP, and VSV for EVAP and charcoal canister.**

CHECK:

(a) Check that the vacuum hose is connected correctly.
(b) Check the vacuum hose for looseness and disconnection.
(c) Check the vacuum hose for cracks, hole, damage and blockage.

NG → **Repair or replace.**

OK

8	**Check operation of VSV for EVAP (See page SF–43).**

NG → **Replace VSV for EVAP.**

OK

9	**Check for open and short in harness and connector between EFI main relay (Marking: EFI) and VSV for EVAP, and VSV for EVAP and ECM (See page IN–28).**

NG → **Repair or replace harness or connector.**

OK

Check and replace ECM (See page IN–28).

10	Check VSV for CCV.

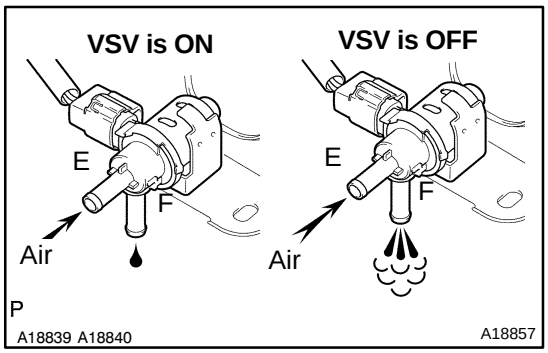

PREPARATION:

(a) Disconnect the vacuum hose for the VSV for the CCV from the charcoal canister.
(b) Turn the ignition switch ON and push the hand–held tester main switch ON.
(c) Select the item ”DIAGNOSIS/ENHANCED OBD II/ACTIVE TEST” mode on the hand–held tester.
(d) Select the item ”INTAKE CTL VSV/ALL” in the ACTIVE TEST and operate INTAKE CTL VSV (Press the ← or → button).

CHECK:

Check the VSV operation when it is operated by the hand–held tester.

OK:

VSV is ON:
Air does not flow from port E to port F.
VSV is OFF:
Air from port E flows out through port F.

OK	Go to step 14.

NG

11	Check vacuum hose between VSV for CCV and charcoal canister.

CHECK:

(a) Check that the vacuum hose is connected correctly.
(b) Check the vacuum hose for looseness and disconnection.
(c) Check the vacuum hose for cracks, hole damage, and blockage.

NG	Repair or replace.

OK

12	Check operation of VSV for CCV (See page SF–44).

NG	Replace VSV for CCV.

OK

13	**Check for open and short in harness and connector between EFI main relay (Marking: EFI) and VSV for CCV, and VSV for CCV and ECM (See page IN–28).**

NG → **Repair or replace harness or connector.**

OK

Check and replace ECM (See page IN–28).

14	**Check VSV for pressure switching valve.**

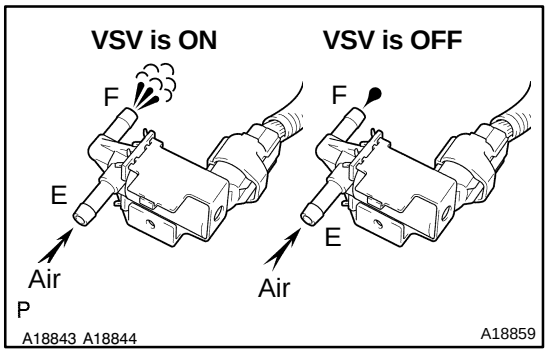

PREPARATION:

(a) Turn the ignition switch ON and push the hand–held tester main switch ON.

(b) Select the item "DIAGNOSIS/ENHANCED OBD II/ACTIVE TEST" mode on the hand–held tester.

(c) Select the item "TANK BYPASS VSV/ALL" in the ACTIVE TEST and operate TANK BYPASS VSV (Press the ← or → button).

CHECK:

Check the VSV operation when it is operated by the hand–held tester.

OK:

VSV is ON:
Air from port E flows out through port F.
VSV is OFF:
Air does not flow from port E to port F.

OK → **Go to step 17.**

NG

15	**Check operation of VSV for pressure switching valve (See page SF–46).**

NG → **Replace VSV for pressure switching valve.**

OK

16	**Check for open and short in harness and connector between EFI main relay (Marking: EFI) and VSV for pressure switching valve, and VSV for pressure switching valve and ECM (See page IN–28).**

NG → **Repair or replace harness or connector.**

OK

Check and replace ECM (See page IN–28).

17	**Check whether hose close to fuel tank have been modified, and check whether there are signs of any accident near fuel tank.**

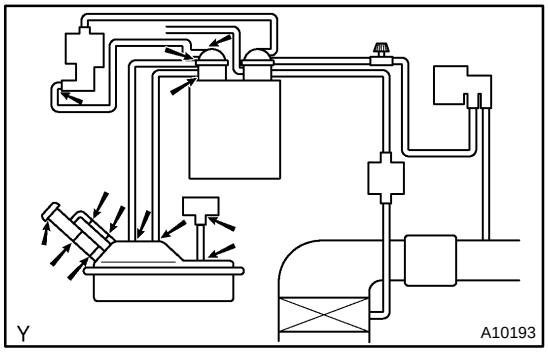

CHECK:

Check for cracks, deformation and loose connection of the following parts:

- Fuel tank
- Fuel tank filler pipe
- Hoses and tubes around fuel tank

NG → **Repair or replace.**

OK

18	**Check vacuum hoses between vapor pressure sensor and fuel tank, and charcoal canister and VSV for pressure switching valve.**

CHECK:

(a) Check that the vacuum hose is connected correctly.
(b) Check the vacuum hose for looseness and disconnection.
(c) Check the vacuum hose for cracks, hole and damage.

NG → **Repair or replace.**

OK

19	Check hose and tube between fuel tank and charcoal canister.

CHECK:

(a) Check for proper connection of the fuel tank and fuel evap pipe (See page EC–8), fuel evap pipe and fuel tube under the floor, fuel tube under the floor and charcoal canister.

(b) Check the hose and tube for cracks, hole and damage.

NG → **Repair or replace.**

OK

20	Check voltage between terminals VC and E2 of ECM connector.

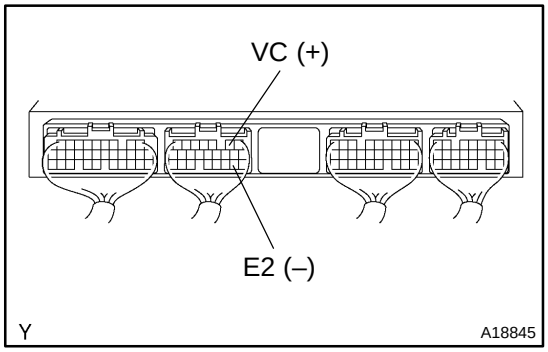

CHECK:

(a) Remove the grove compartment (See page SF–55).

(b) Turn the ignition switch ON.

CHECK:

Measure the voltage between terminals VC and E2 of the ECM connector.

OK:

Voltage: 4.5 – 5.5 V

NG → **Check and replace ECM (See page IN–28).**

OK

21	Check voltage between terminals PTNK and E2 of ECM connectors.

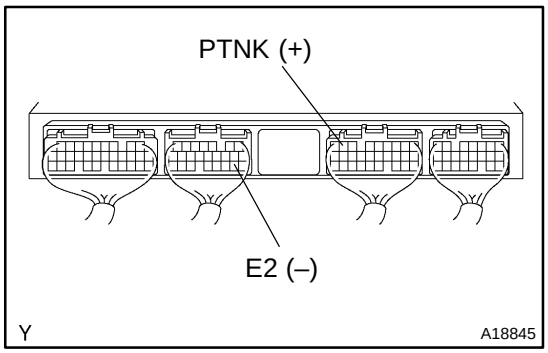

PREPARATION:

(a) Remove the grove compartment (See page SF–56).

(b) Turn the ignition switch ON.

CHECK:

Measure the voltage between terminals PTNK and E2 of the ECM connectors.

(1) Disconnect the vacuum hose from the vapor pressure sensor.

(2) Using the MITYVAC (Hand–held Vacuum Pump), apply a vacuum of 4.0 kPa (30 mmHg, 1.18 in.Hg) to the vapor pressure sensor.

NOTICE:

The vacuum applied to the vapor pressure sensor must be less than 66.7 kPa (500 mmHg, 19.7 in.Hg).

OK:

(1) Voltage: 2.9 – 3.7 V

(2) Voltage: 0.5 V or less

OK	Go to step 23.

NG

22	Check for open and short in harness and connector between vapor pressure sensor and ECM (See page IN–28).

NG	Repair or replace harness or connector.

OK

Replace vapor pressure sensor.

23	**Check fuel tank over fill check valve for cracks and damage.**

NG → **Replace fuel tank over fill check valve.**

OK

Check and replace fuel tank.

24	**Check purge flow.**

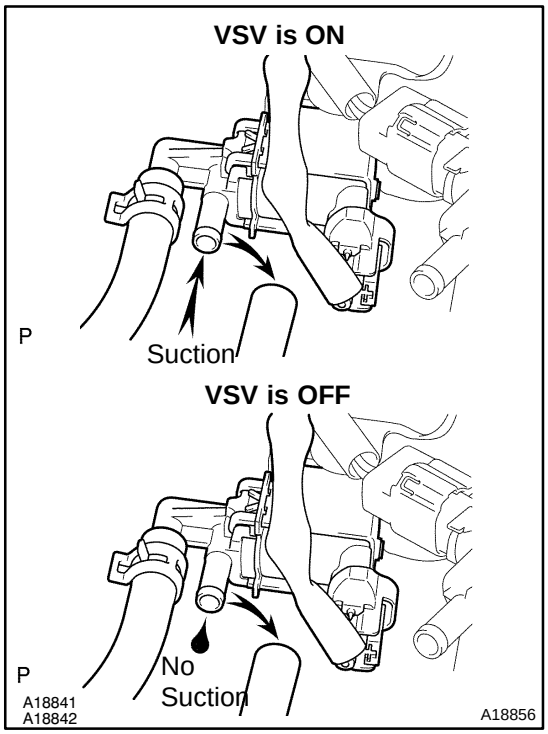

PREPARATION:

(a) Connect the hand–held tester to the DLC3.
(b) Select the item ”DIAGNOSIS/ENHANCED OBD II/ACTIVE TEST” mode on the hand–held tester.
(c) Disconnect the vacuum hose for the VSV for the EVAP from the charcoal canister.
(d) Start the engine.
(e) Select the item ”EVAP VSV (ALON)/ALL” in the ACTIVE TEST and operate EVAP VSV (Press the ← or → button).

CHECK:

When the VSV for the EVAP is operated by the hand–held tester, check whether the disconnected hose applies suction to your finger.

OK:

VSV is ON:
Disconnected hose applies suction to your finger.
VSV is OFF:
Disconnected hose applies no suction to your finger.

OK → **Go to step 28.**

NG

25	**Check vacuum hose between intake manifold and VSV for EVAP, and VSV for EVAP and charcoal canister.**

CHECK:

(a) Check that the vacuum hose is connected correctly.
(b) Check the vacuum hose for looseness and disconnection.
(c) Check the vacuum hose for cracks, hole, damage and blockage.

NG → **Repair or replace.**

OK

26	**Check operation of VSV for EVAP (See page SF–43).**

NG → **Replace VSV for EVAP.**

OK

27	**Check for open and short in harness and connector between EFI main relay (Marking: EFI) and VSV for EVAP, and VSV for EVAP and ECM (See page IN–28).**

NG → **Repair or replace harness or connector.**

OK

Check and replace ECM (See page IN–28).

28	Check VSV for CCV.

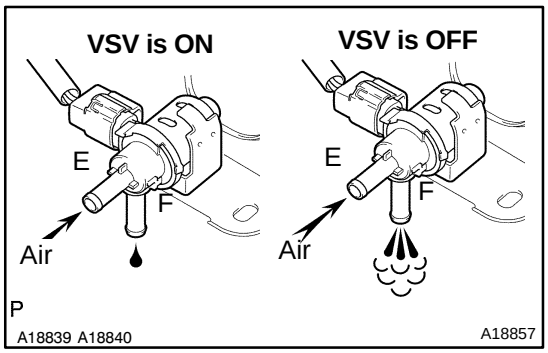

PREPARATION:

(a) Disconnect the vacuum hose for the VSV for the CCV from the charcoal canister.
(b) Turn the ignition switch ON and push the hand–held tester main switch ON.
(c) Select the item ”DIAGNOSIS/ENHANCED OBD II/ACTIVE TEST” mode on the hand–held tester.
(d) Select the item ”INTAKE CTL VSV/ALL” in the ACTIVE TEST and operate INTAKE CTL VSV (Press the ← or → button).

CHECK:

Check the VSV operation when it is operated by the hand–held tester.

OK:

VSV is ON:
Air does not flow from port E to port F.
VSV is OFF:
Air from port E flows out through port F.

OK	Go to step 32.

NG

29	Check vacuum hose between VSV for CCV and charcoal canister.

CHECK:

(a) Check that the vacuum hose is connected correctly.
(b) Check the vacuum hose for looseness and disconnection.
(c) Check the vacuum hose for cracks, hole damage, and blockage.

NG	Repair or replace.

OK

30	Check operation of VSV for CCV (See page SF–44).

NG	Replace VSV for CCV.

OK

31	**Check for open and short in harness and connector between EFI main relay (Marking: EFI) and VSV for CCV, and VSV for CCV and ECM (See page IN–28).**

NG → **Repair or replace harness or connector.**

OK

Check and replace ECM (See page IN–28).

32	**Check VSV for pressure switching valve.**

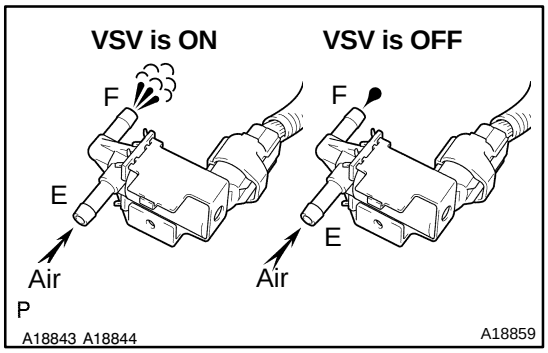

PREPARATION:

(a) Turn the ignition switch ON and push the hand–held tester main switch ON.

(b) Select the item "DIAGNOSIS/ENHANCED OBD II/ACTIVE TEST" mode on the hand–held tester.

(c) Select the item "TANK BYPASS VSV/ALL" in the ACTIVE TEST and operate TANK BYPASS VSV (Press the ← or → button).

CHECK:

Check the VSV operation when it is operated by the hand–held tester.

OK:

VSV is ON:
Air from port E flows out through port F.
VSV is OFF:
Air does not flow from port E to port F.

OK → **Go to step 35.**

NG

33	**Check operation of VSV for pressure switching valve (See page SF–46).**

NG → **Replace VSV for pressure switching valve.**

OK

34	**Check for open and short in harness and connector between EFI main relay (Marking: EFI) and VSV for pressure switching valve, and VSV for pressure switching valve and ECM (See page IN–28).**

NG → **Repair or replace harness or connector.**

OK

Check and replace ECM (See page IN–28).

35	**Check whether there are signs of any accident near charcoal canister.**

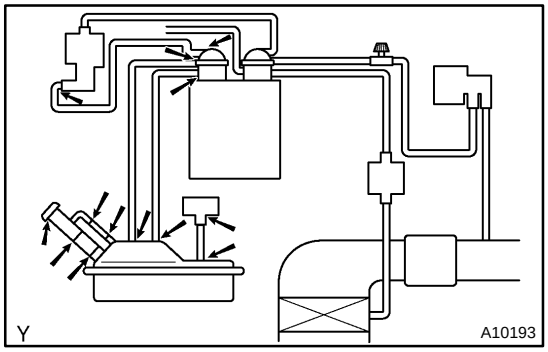

CHECK:

Check for cracks, deformation and loose connection of the following parts:

- Charcoal canister
- Hoses and tubes around charcoal canister

NG → **Repair or replace.**

OK

36	**Check vacuum hoses ((4), (5), (7) and (8) in Fig. 1 in description).**

CHECK:

(a) Check that the vacuum hose is connected correctly.
(b) Check the vacuum hose for looseness and disconnection.
(c) Check the vacuum hose for cracks, hole and damage.

NG → **Repair or replace.**

OK

37	Check hose and tube between fuel tank and charcoal canister.

CHECK:

(a) Check for proper connection of the fuel tank and fuel evap pipe (See page EC–8), fuel evap pipe and fuel tube under the floor, fuel tube under the floor and charcoal canister.

(b) Check the hose and tube for cracks, hole and damage.

NG → **Repair or replace.**

OK

38	Check charcoal canister for cracks, hole and damage (See page EC–8).

NG → **Repair or replace.**

OK

39	Check voltage between terminals VC and E2 of ECM connector.

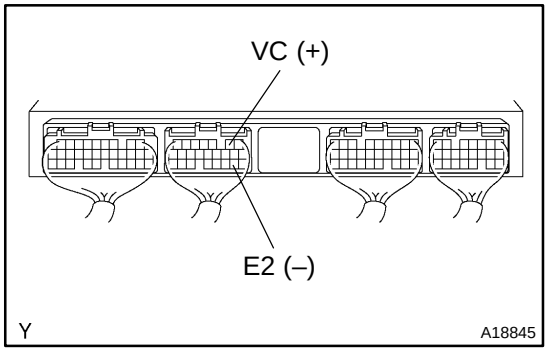

CHECK:

(a) Remove the grove compartment (See page SF–55).

(b) Turn the ignition switch ON.

CHECK:

Measure the voltage between terminals VC and E2 of the ECM connector.

OK:

Voltage: 4.5 – 5.5 V

NG → **Check and replace ECM (See page IN–28).**

OK

40	Check voltage between terminals PTNK and E2 of ECM connectors.

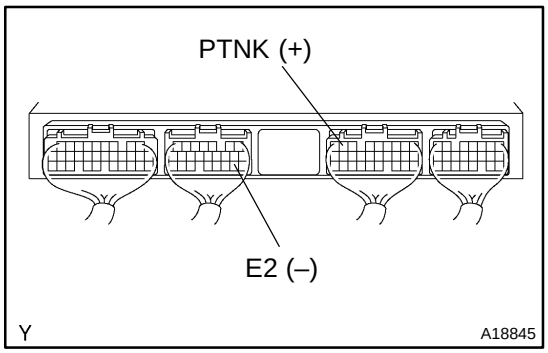

PREPARATION:

(a) Remove the grove compartment (See page SF–55).

(b) Turn the ignition switch ON.

CHECK:

Measure the voltage between terminals PTNK and E2 of the ECM connectors.

(1) Disconnect the vacuum hose from the vapor pressure sensor.

(2) Using the MITYVAC (Hand–held Vacuum Pump), apply a vacuum of 4.0 kPa (30 mmHg, 1.18 in.Hg) to the vapor pressure sensor.

NOTICE:

The vacuum applied to the vapor pressure sensor must be less than 66.7 kPa (500 mmHg, 19.7 in.Hg).

OK:

(1) Voltage: 2.9 – 3.7 V

(2) Voltage: 0.5 V or less

OK	Check and replace ECM (See page IN–28).

NG

41	Check for open and short in harness and connector between vapor pressure sensor and ECM (See page IN–28).

NG	Repair or replace harness or connector.

OK

Replace vapor pressure sensor.

42	Check purge flow.

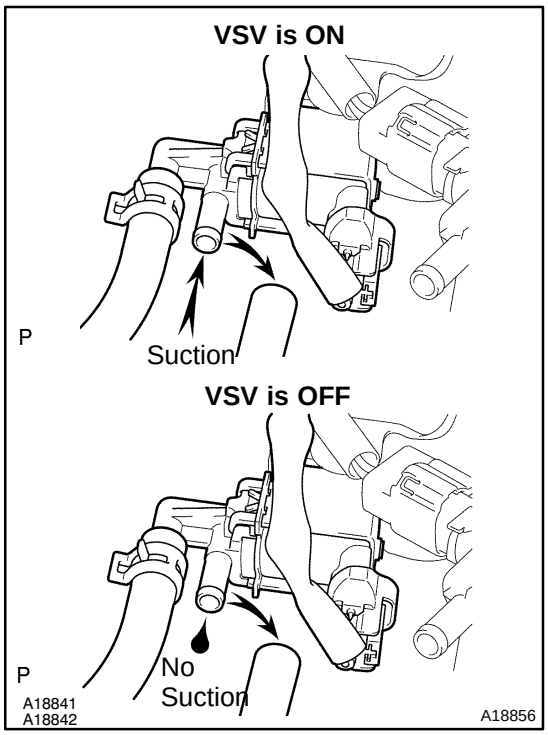

PREPARATION:

(a) Connect the hand–held tester to the DLC3.
(b) Select the item "DIAGNOSIS/ENHANCED OBD II/ACTIVE TEST" mode on the hand–held tester.
(c) Disconnect the vacuum hose for the VSV for the EVAP from the charcoal canister.
(d) Start the engine.
(e) Select the item "EVAP VSV (ALON)/ALL" in the ACTIVE TEST and operate EVAP VSV (Press the ← or → button).

CHECK:

When the VSV for the EVAP is operated by the hand–held tester, check whether the disconnected hose applies suction to your finger.

OK:

VSV is ON:
Disconnected hose applies suction to your finger.
VSV is OFF:
Disconnected hose applies no suction to your finger.

OK	Go to step 46.

NG

43	Check vacuum hose between intake manifold and VSV for EVAP, and VSV for EVAP and charcoal canister.

CHECK:

(a) Check that the vacuum hose is connected correctly.
(b) Check the vacuum hose for looseness and disconnection.
(c) Check the vacuum hose for cracks, hole, damage and blockage.

NG	Repair or replace.

OK

44	Check operation of VSV for EVAP (See page SF–43).

NG	Replace VSV for EVAP.

OK

45	**Check for open and short in harness and connector between EFI main relay (Marking: EFI) and VSV for EVAP, and VSV for EVAP and ECM (See page IN–28).**

NG → **Repair or replace harness or connector.**

OK

Check and replace ECM (See page IN–28).

46	**Check VSV for CCV.**

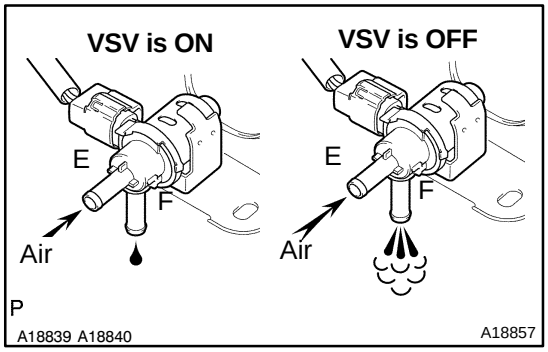

PREPARATION:

(a) Disconnect the vacuum hose for the VSV for the CCV from the charcoal canister.

(b) Turn the ignition switch ON and push the hand–held tester main switch ON.

(c) Select the item ”DIAGNOSIS/ENHANCED OBD II/ACTIVE TEST” mode on the hand–held tester.

(d) Select the item ”INTAKE CTL VSV/ALL” in the ACTIVE TEST and operate INTAKE CTL VSV (Press the ← or → button).

CHECK:

Check the VSV operation when it is operated by the hand–held tester.

OK:

VSV is ON:
Air does not flow from port E to port F.
VSV is OFF:
Air from port E flows out through port F.

OK → **Go to step 50.**

NG

47	**Check vacuum hose between VSV for CCV and charcoal canister.**

CHECK:

(a) Check that the vacuum hose is connected correctly.
(b) Check the vacuum hose for looseness and disconnection.
(c) Check the vacuum hose for cracks, hole damage, and blockage.

NG → **Repair or replace.**

OK

48	**Check operation of VSV for CCV (See page SF–44).**

NG → **Replace VSV for CCV.**

OK

49	**Check for open and short in harness and connector between EFI main relay (Marking: EFI) and VSV for CCV, and VSV for CCV and ECM (See page IN–28).**

NG → **Repair or replace harness or connector.**

OK

Check and replace ECM (See page IN–28).

50	**Check VSV for pressure switching valve.**

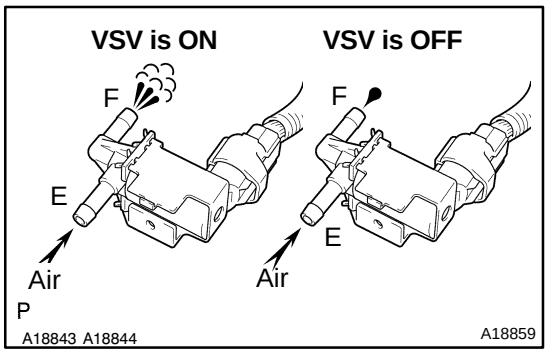

PREPARATION:

(a) Turn the ignition switch ON and push the hand–held tester main switch ON.

(b) Select the item ”DIAGNOSIS/ENHANCED OBD II/ACTIVE TEST” mode on the hand–held tester.

(c) Select the item ”TANK BYPASS VSV/ALL” in the ACTIVE TEST and operate TANK BYPASS VSV (Press the ← or → button).

CHECK:

Check the VSV operation when it is operated by the hand–held tester.

OK:

VSV is ON:
Air from port E flows out through port F.
VSV is OFF:
Air does not flow from port E to port F.

OK	**Go to step 53.**

NG

51	**Check operation of VSV for pressure switching valve (See page SF–46).**

NG	**Replace VSV for pressure switching valve.**

OK

52	**Check for open and short in harness and connector between EFI main relay (Marking: EFI) and VSV for pressure switching valve, and VSV for pressure switching valve and ECM (See page IN–28).**

NG	**Repair or replace harness or connector.**

OK

Check and replace ECM (See page IN–28).

53	Check whether hose close to fuel tank have been modified, and check whether there are signs of any accident near fuel tank or charcoal canister.

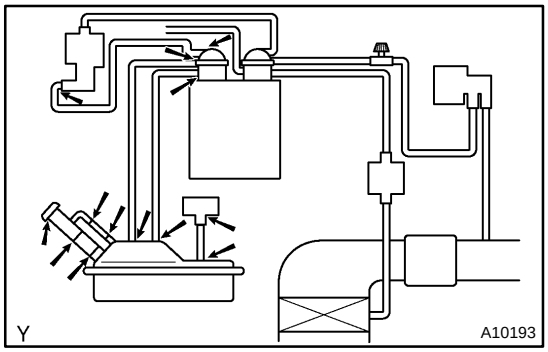

CHECK:

Check for cracks, deformation and loose connection of the following parts:

- Fuel tank
- Charcoal canister
- Fuel tank filler pipe
- Hoses and tubes around fuel tank and charcoal canister

NG → **Repair or replace.**

OK

54	Check vacuum hoses between vapor pressure sensor and fuel tank, and charcoal canister and VSV for pressure switching valve.

CHECK:

(a) Check that the vacuum hose is connected correctly.
(b) Check the vacuum hose for looseness and disconnection.
(c) Check the vacuum hose for cracks, hole and damage.

NG → **Repair or replace.**

OK

55	Check vacuum hoses ((4), (5), (7) and (8) in Fig. 1 in description).

CHECK:

(a) Check that the vacuum hose is connected correctly.
(b) Check the vacuum hose for looseness and disconnection.
(c) Check the vacuum hose for cracks, hole and damage.

NG → **Repair or replace.**

OK

56	Check voltage between terminals VC and E2 of ECM connector.

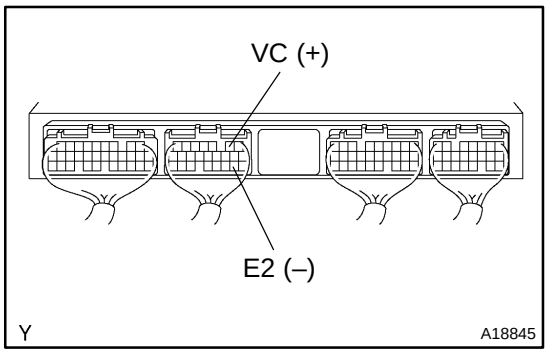

CHECK:

(a) Remove the grove compartment (See page SF–55).

(b) Turn the ignition switch ON.

CHECK:

Measure the voltage between terminals VC and E2 of the ECM connector.

OK:

Voltage: 4.5 – 5.5 V

NG	Check and replace ECM (See page IN–28).

OK

57	Check voltage between terminals PTNK and E2 of ECM connectors.

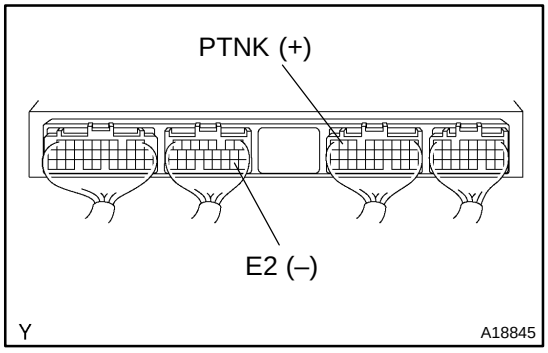

PREPARATION:

(a) Remove the grove compartment (See page SF–55).

(b) Turn the ignition switch ON.

CHECK:

Measure the voltage between terminals PTNK and E2 of the ECM connectors.

(1) Disconnect the vacuum hose from the vapor pressure sensor.

(2) Using the MITYVAC (Hand–held Vacuum Pump), apply a vacuum of 4.0 kPa (30 mmHg, 1.18 in.Hg) to the vapor pressure sensor.

NOTICE:

The vacuum applied to the vapor pressure sensor must be less than 66.7 kPa (500 mmHg, 19.7 in.Hg).

OK:

(1) Voltage: 2.9 – 3.7 V

(2) Voltage: 0.5 V or less

NG	Check and replace ECM (See page IN–28).

OK

58	Check for open and short in harness and connector between vapor pressure sensor and ECM (See page IN–28).

NG → Repair or replace harness or connector.

OK →

Replace vapor pressure sensor.

OBD II scan tool (excluding hand–held tester):

1	Check that fuel tank cap is TOYOTA genuine parts.

NG → Replace to TOYOTA genuine parts.

OK →

2	Check that fuel tank cap is correctly installed.

NG → Correctly install fuel tank cap.

OK →

3	Check fuel tank cap (See page EC–8).

NG → Replace fuel tank cap.

OK →

4	**Check filler neck for damage.**

PREPARATION:
Remove the fuel tank cap.
CHECK:
Visually inspect the filler neck for damage.

NG → **Replace filler pipe.**

OK

5	**Check whether hose close to fuel tank have been modified, and check whether there are signs of any accident near fuel tank or charcoal canister.**

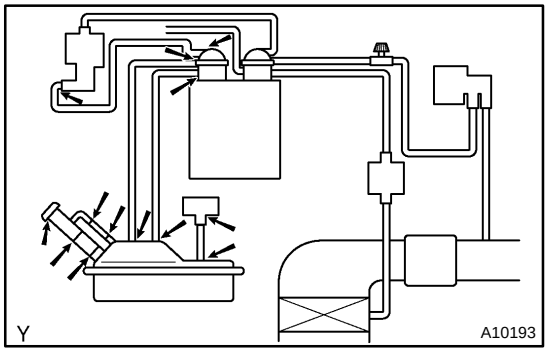

CHECK:
Check for cracks, deformation and loose connection of the following parts:

- Fuel tank
- Charcoal canister
- Fuel tank filler pipe
- Hoses and tubes around fuel tank and charcoal canister

NG → **Repair or replace.**

OK

6	**Check vacuum hoses between vapor pressure sensor and fuel tank, charcoal canister and VSV for pressure switching valve, and VSV for pressure switching valve and charcoal canister.**

CHECK:
(a) Check that the vacuum hose is connected correctly.
(b) Check the vacuum hose for looseness and disconnection.
(c) Check the vacuum hose for cracks, hole and damage.

NG → **Repair or replace.**

OK

7	**Check hose and tube between fuel tank and charcoal canister.**

CHECK:

(a) Check for proper connection of the fuel tank and fuel evap pipe (See page EC–8), fuel evap pipe and fuel tube under the floor, fuel tube under the floor and charcoal canister.

(b) Check the hose and tube for cracks, hole and damage.

NG → **Repair or replace.**

OK

8	**Check vacuum hoses ((5), (6), (7), (8) and (9) in Fig. 1 in circuit description).**

CHECK:

(a) Check that the vacuum hose is connected correctly.

(b) Check the vacuum hose for looseness and disconnection.

(c) Check the vacuum hose for cracks, hole damage, and blockage.

NG → **Repair or replace.**

OK

9	**Check VSV connector for EVAP, VSV connector for CCV, VSV connector for pressure switching valve and vapor pressure sensor connector for looseness and disconnection.**

NG → **Repair or connect VSV or sensor connector.**

OK

10	**Check charcoal canister for cracks, hole and damage (See page EC–8).**

NG → **Replace charcoal canister.**

OK

11	Check voltage between terminals VC and E2 of ECM connector.

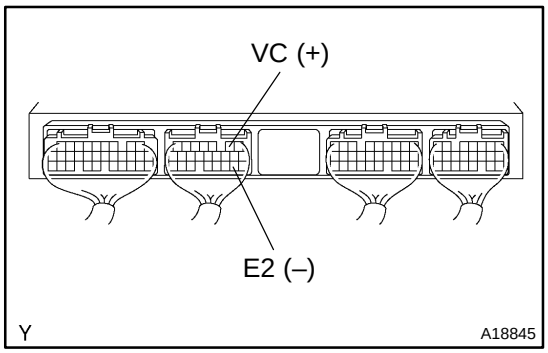

CHECK:

(a) Remove the grove compartment (See page SF–55).

(b) Turn the ignition switch ON.

CHECK:

Measure the voltage between terminals VC and E2 of the ECM connector.

OK:

Voltage: 4.5 – 5.5 V

NG	Check and replace ECM (See page IN–28).

OK

12	Check voltage between terminals PTNK and E2 of ECM connectors.

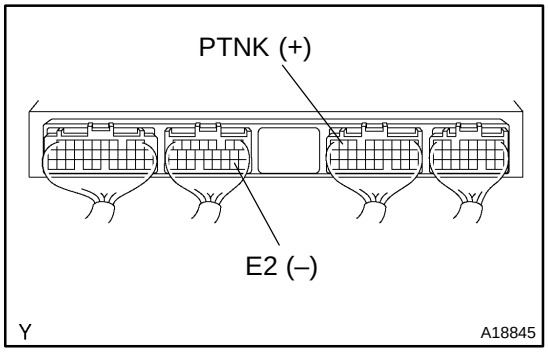

PREPARATION:

(a) Remove the grove compartment (See page SF–55).

(b) Turn the ignition switch ON.

CHECK:

Measure the voltage between terminals PTNK and E2 of the ECM connectors.

(1) Disconnect the vacuum hose from the vapor pressure sensor.

(2) Using the MITYVAC (Hand–held Vacuum Pump), apply a vacuum of 4.0 kPa (30 mmHg, 1.18 in.Hg) to the vapor pressure sensor.

NOTICE:

The vacuum applied to the vapor pressure sensor must be less than 66.7 kPa (500 mmHg, 19.7 in.Hg).

OK:

(1) Voltage: 2.9 – 3.7 V

(2) Voltage: 0.5 V or less

OK	Go to step 14.

NG

13	**Check for open and short in harness and connector between vapor pressure sensor and ECM (See page IN–28).**

NG → **Repair or replace harness or connector.**

OK

Replace vapor pressure sensor.

14	**Check VSV for EVAP.**

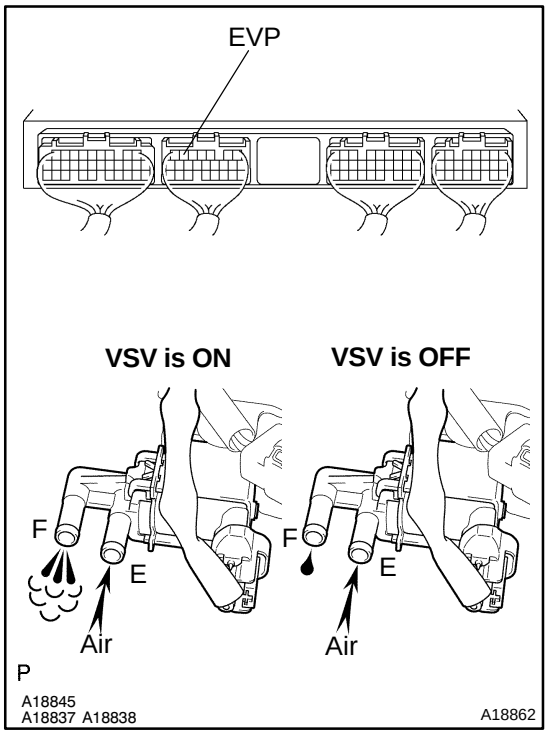

PREPARATION:

(a) Remove the grove compartment (See page SF–55).

(b) Turn the ignition switch ON.

CHECK:

Check the VSV function.

(1) Connect between terminal EVP1 of the ECM connector and body ground (ON).

(2) Disconnect between terminal EVP1 of the ECM connector and body ground (OFF).

OK:

(1) VSV is ON:
Air from port E flows out through port F.
(2) VSV is OFF:
Air does not flow from port E to port F.

OK → **Go to step 17.**

NG

15	**Check operation of VSV for EVAP (See page SF–43).**

NG → **Replace VSV for EVAP.**

OK

16	**Check for open and short in harness and connector between EFI main relay (Marking: EFI) and VSV for EVAP, and VSV for EVAP and ECM (See page IN–28).**

NG → **Repair or replace harness or connector.**

OK

Check and replace ECM (See page IN–28).

17	**Check VSV for CCV.**

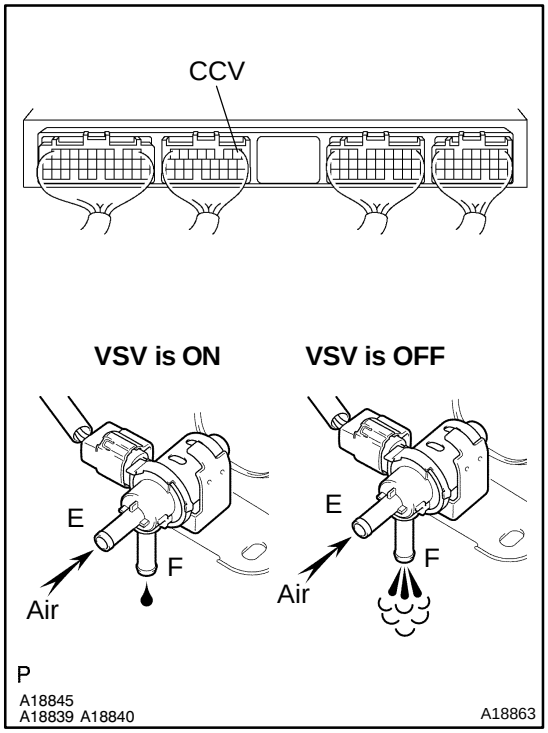

PREPARATION:

(a) Remove the grove compartment (See page SF–55).

(b) Turn the ignition switch ON.

CHECK:

Check the VSV function.

(1) Connect between terminal CCV of the ECM connector and body ground (ON).

(2) Disconnect between terminal CCV of the ECM connector and body ground (OFF).

OK:

VSV is ON:
Air does not flow from port E to port F.
VSV is OFF:
Air from port E flows out through port F.

OK → **Go to step 20.**

NG

18	**Check operation of VSV for CCV (See page SF–44).**

NG → **Replace VSV for CCV.**

OK

19	**Check for open and short in harness and connector between EFI main relay (Marking: EFI) and VSV for CCV, and VSV for CCV and ECM (See page IN–28).**

NG → **Repair or replace harness or connector.**

OK

Check and replace ECM (See page IN–28).

20	**Check VSV for pressure switching valve.**

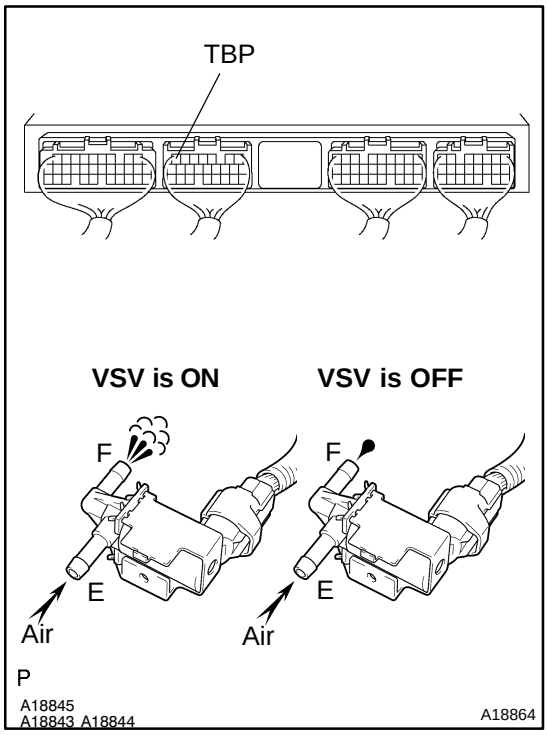

PREPARATION:

(a) Remove the grove compartment (See page SF–55).

(b) Turn the ignition switch ON.

CHECK:

Check the VSV function.

(1) Connect between terminal TBP of the ECM connector and body ground (ON).

(2) Disconnect between terminal TBP of the ECM connector and body ground (OFF).

OK:

(1) VSV is ON:
Air from port E flows out through port F.
(2) VSV is OFF:
Air does not from flow port E to port F.

OK → **Go to step 23.**

NG

21	**Check operation of VSV for pressure switching valve (See page SF–46).**

NG → **Replace VSV for pressure switching valve.**

OK

22	Check for open and short in harness and connector between EFI main relay (Marking: EFI) and VSV for pressure switching valve, and VSV for pressure switching valve and ECM (See page IN–28).

NG → Repair or replace harness or connector.

OK

Check and replace ECM (See page IN–28).

23	Check the fuel tank over fill check valve (See page EC–8).

NG → Replace fuel tank over fill check valve.

OK

24	Check the fuel tank.

NG → Replace fuel tank.

OK

It is likely that vehicle user did not properly close fuel tank cap. Please explain to customer how to properly install fuel tank cap.

DTC	P0442	Evaporative Emission Control System Leak Detected (Small Leak)

DTC	P0456	Evaporative Emission Control System Leak Detected (Very Small Leak)

CIRCUIT DESCRIPTION

The vapor pressure sensor,VSV for EVAP, VSV for canister closed valve (CCV) and VSV for pressure switching valve are used to detect abnormalities in the evaporative emission control system.
The ECM decides whether there is an abnormality in the evaporative emission control system based on the vapor pressure sensor signal.
DTC P0442 or P0456 is recorded by the ECM when evaporative emissions leak from the components within the dotted line in Fig. 1 below, or when the vapor pressure sensor malfunctions.

Fig. 1

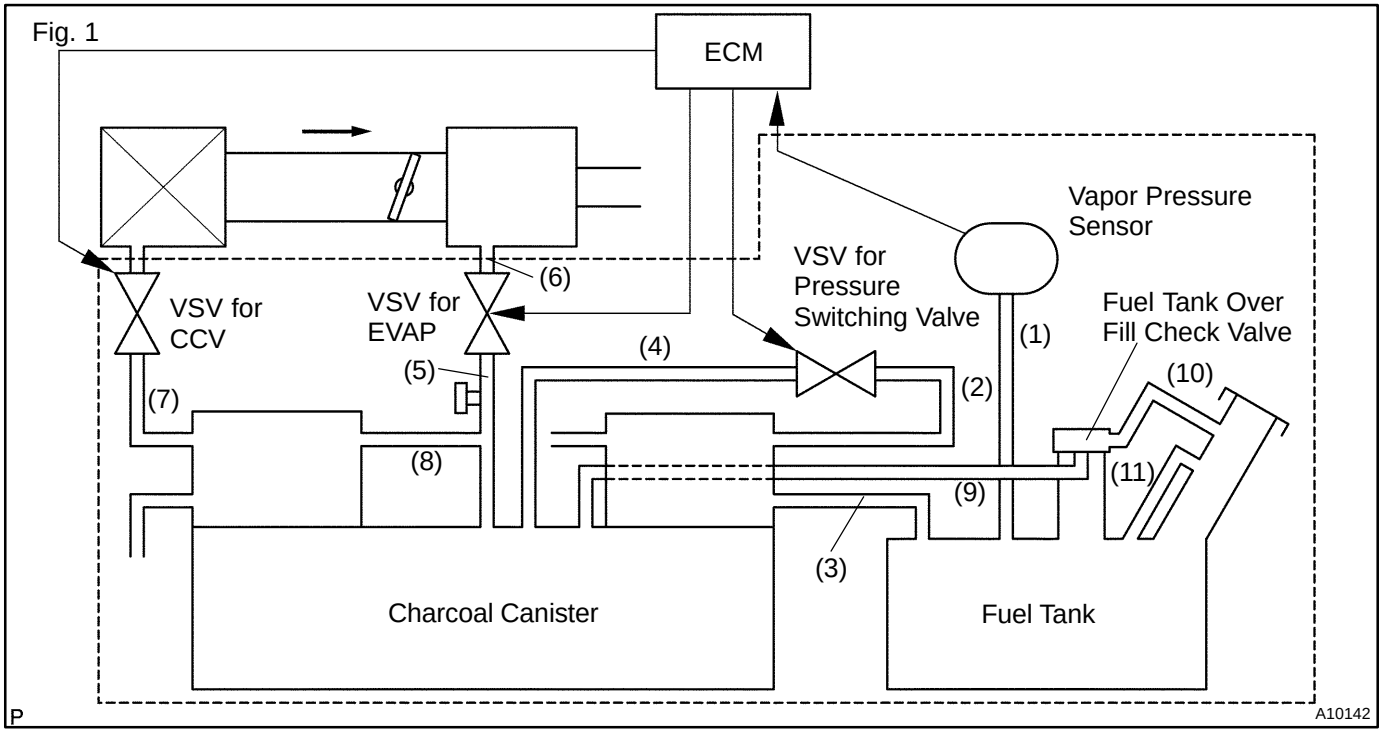

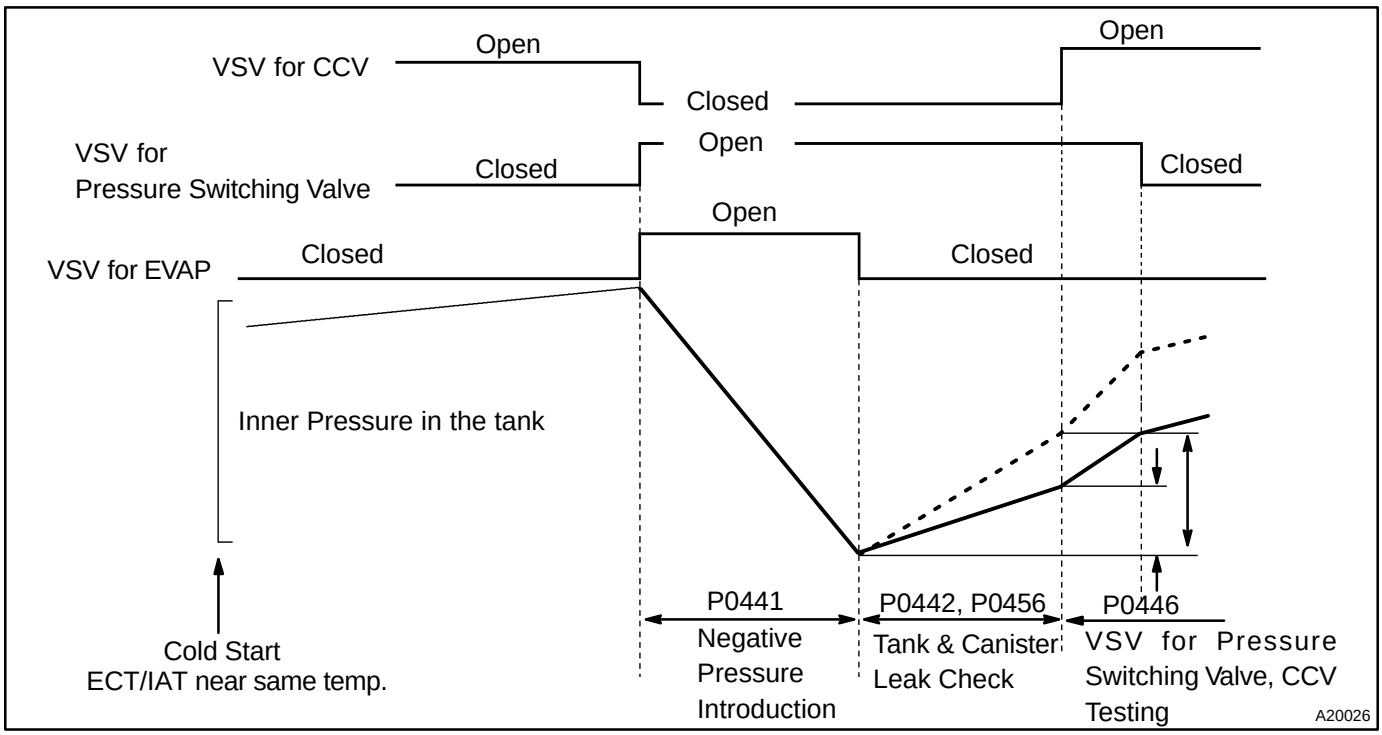

After purge operation, the VSV for EVAP is turned off sealing the vacuum in the system and the ECM begins to monitor the pressure increase. It is a normal if the increase in pressure is lower than the predict level. A very rapid, sharp increase in pressure indicates a leak in the EVAP system and sets the DTC P0442.
A pressure rise just above normal indicates a very small hole and will set the DTC P0456.

DTC No.	DTC Detecting Condition	Trouble Area
P0442 P0456	After cold engine start. After VSV for EVAP operation, the VSV for EVAP is turned off sealing the vacuum in the system and the ECM begins to monitor the pressure increase. Some increase is normal. A very rapid, sharp increase in pressure indicates a leak in the EVAP system and sets the DTC P0442. This monitoring method is also able to distinguish what is called the small leak detection.(DTC P0456) A pressure rise just above normal indicates a very small hole.	• Fuel tank cap incorrectly installed • Fuel tank cap cracked or damaged • Hose or tube cracked, hole, damaged or loose seal ((3) or (9) in Fig. 1) • Vacuum hose cracked, holed, blocked, damaged or disconnected ((1), (2), (4), (5), (6), (7), (8), (10)and (11) in Fig. 1) • Fuel tank cracked, holed or damaged • Charcoal canister cracked, holed or damaged • Open or short in vapor pressure sensor circuit • VSV for CCV • VSV for EVAP • VSV for pressure switching valve • Vapor pressure sensor • Fuel tank over fill check valve cracked or damaged • ECM

HINT:
Typical DTC output of each trouble part

Trouble part		Typical DTC output (*1)
Small Leak		P0442 and/or P0456
Medium Leak (ex: Vacuum hose loose)		P0442
Large Leak (ex: Fuel tank cap loose)		P0441 and P0442 and P0446
VSV for EVAP	Open Malfunction	P0441
	Close Malfunction	P0441 and P0442 and P0446
VSV for CCV	Open Malfunction	P0441 and P0442 and P0446
	Close Malfunction	P0446
VSV for Pressure Switching	Open Malfunction	P0446
	Close Malfunction	P0441 and P0442 and P0446

*1: ECM may output some other DTC combination.

WIRING DIAGRAM

Refer to DTC P0441 and P0446 on page DI–118.

CONFIRMATION READINESS TEST

First Trip Procedure

(a) Vehicle must be cold, ambient temperature approximately between 50˚F – 95˚F.

(b) Intake Air Temp. (IAT) and Engine Coolant Temp. (ECT) sensor almost same value.

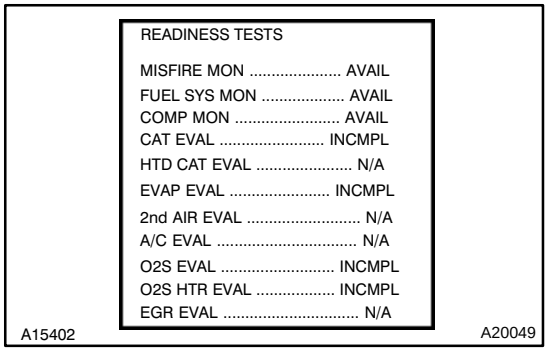

(c) Clear DTC's.
- Disconnecting the battery terminals or remove the EFI fuse.
- Readiness tests will show INCMPL (incomplete).

(d) Drive the vehicle according to LA#4 drive cycle. Note the state of Readiness Tests. They will change to COMPL as the evaluation monitors operate and if the system passes. This procedure may take approximately 20 minutes or more.

NOTICE:

Do not shut off the engine – the results will be invalid.

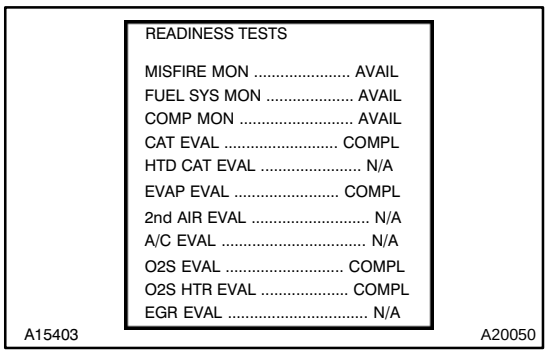

Pass Condition – No Problem Found by the ECM

If the EVAP evaluation monitor shows COMPL, go to the Non–Continuous Test screen.

NOTICE:

Do not shut off the engine – the results will be invalid.

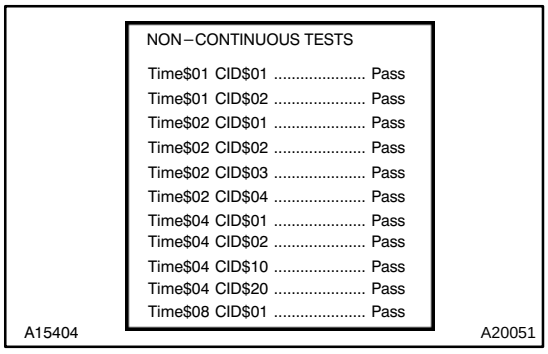

- To get there, go to Advanced OBD II, Onboard Tests, Non–continuous Tests.
- If all of the tests in the time $02 category Tests show Pass, the evaluation monitor has operated and no problem was detected.

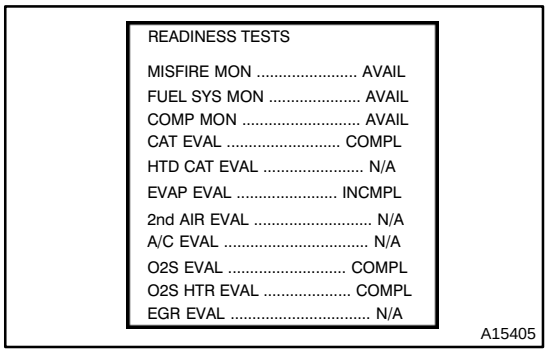

Fail Condition – Problem Detected by the ECM

If the EVAP evaluation monitor shows INCMPL, go to the Non–Continuous Test screen.

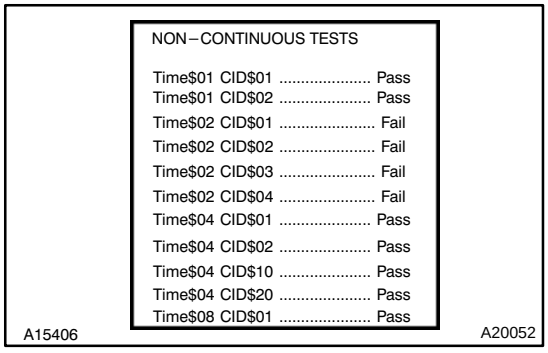

(1) If all Tests show Pass, the following may have occurred.
- The EVAP evaluation monitor did not operate.
- The EVAP evaluation monitor did not finish.
- The ECM withheld judgement.

(2) If one or more of the tests in the time $02 category show Fail, the EVAP evaluation monitor did operate and the ECM detected a problem.

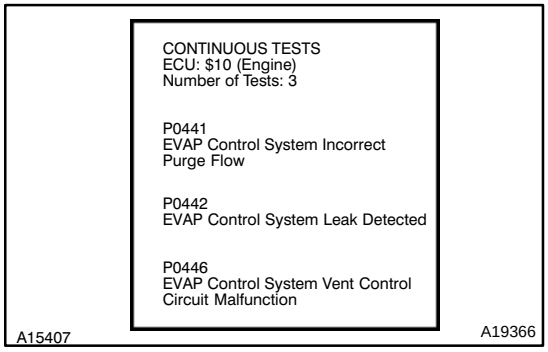

(3) Go to Continuous Tests screen. This is the only place DTC's are listed for the first trip.

NOTICE:

The DTC listed may not be valid. A second trip is needed to confirm the DTC.

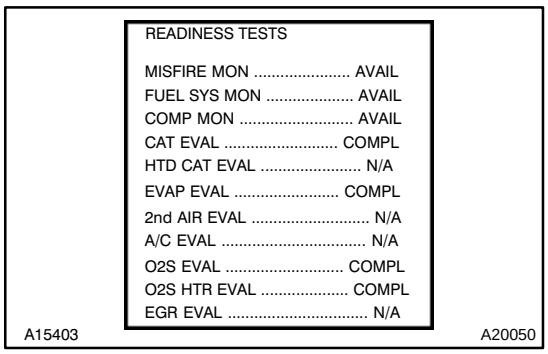

Second Trip Procedure

(a) Vehicle must be cold, ambient temperature approximately between 50°F – 95°F.

(b) Go to Readiness Tests screen.

(c) Drive the vehicle according to LA#4 drive cycle. Note the state of EVAP evaluation monitor. This procedure may take approximately 20 minutes or more.

NOTICE:

Do not shut off the engine – the results will be invalid.

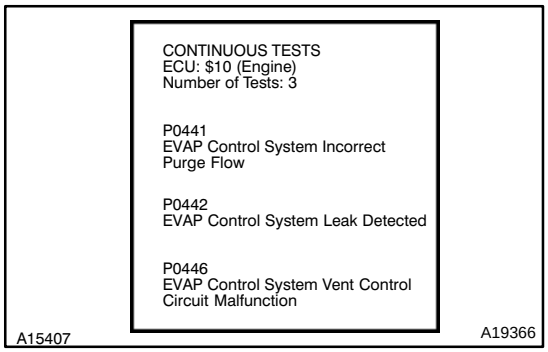

If Readiness Tests changes to COMPL, the EVAP evaluation monitor has operated. Check for any stored DTC's.

- If a DTC has stored, the problem has been detected and confirmed by the ECM.
- If no DTC was found, the EVAP monitor operated but no problem was detected.

INSPECTION PROCEDURE

HINT:

- If DTC P0441 (Purge Flow), P0446 (VSV for CCV or VSV for Pressure switching valve), P0451 P0452 or P0453 (Evaporative Pressure Sensor) is output with DTC P0442 or P0456, first troubleshoot DTC P0441, P0446, P0451. P0452 or P0453. If no malfunction is detected, troubleshoot DTC P0442 or P0456 next.
- Ask the customer whether, after the MIL came on, the customer found the fuel tank cap loose and tightened it. Also ask the customer whether the fuel tank cap was loose when refuelling. If the fuel tank cap was loose, it was the cause of the DTC. If the fuel tank cap was not loose or if the customer was not sure if it was loose, troubleshoot according to the following procedure.
- Read freeze frame data using OBD II scan tool or hand–held tester. Because freeze frame records the engine conditions when the malfunction is detected. When troubleshooting, it is useful for determining whether the vehicle was running or stopped, the engine was warmed up or not, the air–fuel ratio was lean or rich, etc. at the time of the malfunction.
- When the ENGINE RUN TIME in the freeze frame data is less than 200 seconds, carefully check the vapor pressure sensor.

Hand–held tester:

1	**Perform EVAP leak test.**

PREPARATION:

(a) Connect the hand–held tester to the DLC3.

(b) Select the item ”DIAGNOSIS/ENHANCED OBD II/SYSTEM CHECK/EVAP SYS CHECK (or EVAP LEAK TEST)” mode on the hand–held tester.

(c) Perform ”EVAP SYS CHECK (or EVAP LEAK TEST)”.

CHECK:

Display on the Hand–held tester	Proceed to
Scan tool detects a leak on the fuel tank side.	A
Scan tool detects a leak on the canister side.	B
Scan tool doesn’t detects a leak on the EVAP system.	C

If any changes do not occur with in 1 minute after pressing ”EVAP LEAK TEST”, once remove the fuel tank cap, then set the fuel tank cap again. Then perform the ”EVAP LEAK TEST”.

A → **Refer to DTC P0441 or P0446 (See page DI–118 step 2).**

B → **Refer to DTC P0441 or P0446 (See page DI–118 step 24).**

C

2	**Check that fuel tank cap is TOYOTA genuine parts.**

NG → **Replace to TOYOTA genuine parts.**

OK

3	**Check that fuel tank cap is correctly installed.**

NG → **Correctly install fuel tank cap.**

OK

4	**Check fuel tank cap (See page EC–8).**

NG → **Replace fuel tank cap.**

OK

5	**Check filler neck for damage.**

PREPARATION:
Remove the fuel tank cap.
CHECK:
Visually inspect the filler neck for damage.

NG → **Replace filler pipe.**

OK

6	**Check purge flow.**

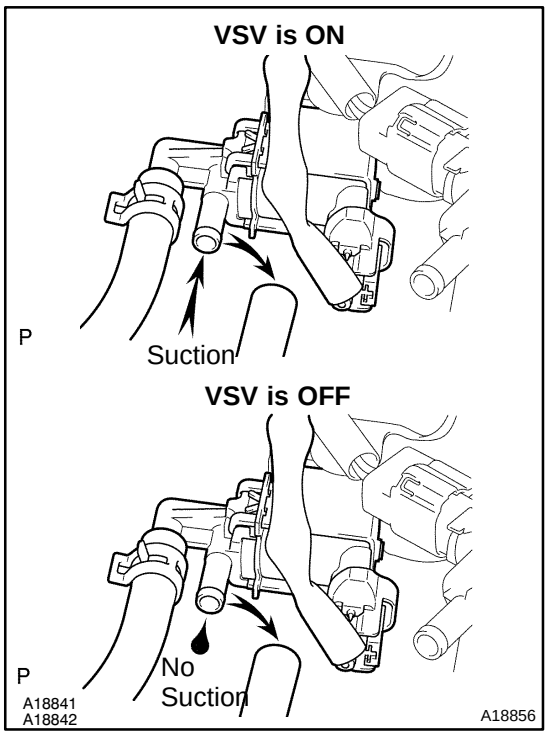

PREPARATION:
(a) Connect the hand–held tester to the DLC3.
(b) Select the item ”DIAGNOSIS/ENHANCED OBD II/ACTIVE TEST” mode on the hand–held tester.
(c) Disconnect the vacuum hose for the VSV for the EVAP from the charcoal canister.
(d) Start the engine.
(e) Select the item ”EVAP VSV (ALON)/ALL” in the ACTIVE TEST and operate EVAP VSV (Press the ← or → button).

CHECK:
When the VSV for the EVAP is operated by the hand–held tester, check whether the disconnected hose applies suction to your finger.

OK:
VSV is ON:
Disconnected hose applies suction to your finger.
VSV is OFF:
Disconnected hose applies no suction to your finger.

OK → **Go to step 10.**

NG

7	**Check vacuum hose between intake manifold and VSV for EVAP, and VSV for EVAP and charcoal canister.**

CHECK:

(a) Check that the vacuum hose is connected correctly.
(b) Check the vacuum hose for looseness and disconnection.
(c) Check the vacuum hose for cracks, hole, damage and blockage.

NG → **Repair or replace.**

OK

8	**Check operation of VSV for EVAP (See page SF–43).**

NG → **Replace VSV for EVAP.**

OK

9	**Check for open and short in harness and connector between EFI main relay (Marking: EFI) and VSV for EVAP, and VSV for EVAP and ECM (See page IN–28).**

NG → **Repair or replace harness or connector.**

OK

Check and replace ECM (See page IN–28).

10	Check VSV for CCV.

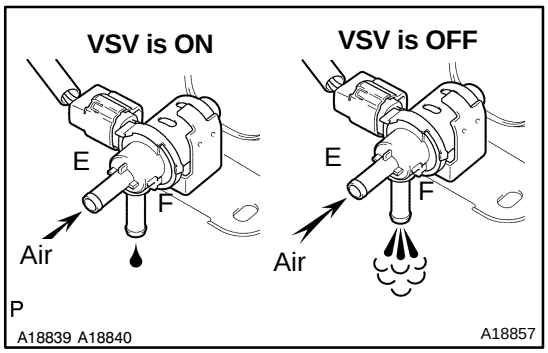

PREPARATION:

(a) Disconnect the vacuum hose for the VSV for the CCV from the charcoal canister.
(b) Turn the ignition switch ON and push the hand–held tester main switch ON.
(c) Select the item ”DIAGNOSIS/ENHANCED OBD II/ACTIVE TEST” mode on the hand–held tester.
(d) Select the item ”INTAKE CTL VSV/ALL” in the ACTIVE TEST and operate INTAKE CTL VSV (Press the ← or → button).

CHECK:

Check the VSV operation when it is operated by the hand–held tester.

OK:

VSV is ON:
Air does not flow from port E to port F.
VSV is OFF:
Air from port E flows out through port F.

OK	Go to step 14.

NG

11	Check vacuum hose between VSV for CCV and charcoal canister.

CHECK:

(a) Check that the vacuum hose is connected correctly.
(b) Check the vacuum hose for looseness and disconnection.
(c) Check the vacuum hose for cracks, hole damage, and blockage.

NG	Repair or replace.

OK

12	Check operation of VSV for CCV (See page SF–44).

NG	Replace VSV for CCV.

OK

13	**Check for open and short in harness and connector between EFI main relay (Marking: EFI) and VSV for CCV, and VSV for CCV and ECM (See page IN–28).**

NG → **Repair or replace harness or connector.**

OK

Check and replace ECM (See page IN–28).

14	**Check VSV for pressure switching valve.**

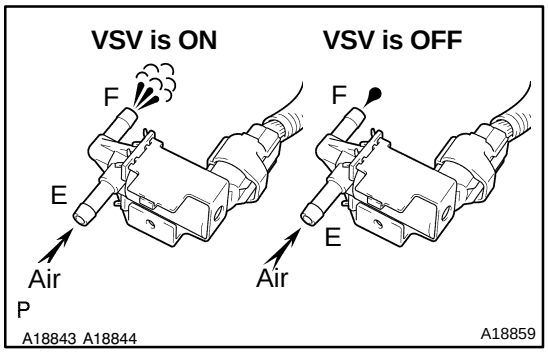

PREPARATION:

(a) Turn the ignition switch ON and push the hand–held tester main switch ON.

(b) Select the item "DIAGNOSIS/ENHANCED OBD II/ACTIVE TEST" mode on the hand–held tester.

(c) Select the item "TANK BYPASS VSV/ALL" in the ACTIVE TEST and operate TANK BYPASS VSV (Press the ← or → button).

CHECK:

Check the VSV operation when it is operated by the hand–held tester.

OK:

VSV is ON:
Air from port E flows out through port F.
VSV is OFF:
Air does not flow from port E to port F.

OK → **Go to step 17.**

NG

15	**Check operation of VSV for pressure switching valve (See page SF–46).**

NG → **Replace VSV for pressure switching valve.**

OK

16	**Check for open and short in harness and connector between EFI main relay (Marking: EFI) and VSV for pressure switching valve, and VSV for pressure switching valve and ECM (See page IN–28).**

NG → **Repair or replace harness or connector.**

OK

Check and replace ECM (See page IN–28).

17	**Check whether hose close to fuel tank have been modified, and check whether there are signs of any accident near fuel tank or charcoal canister.**

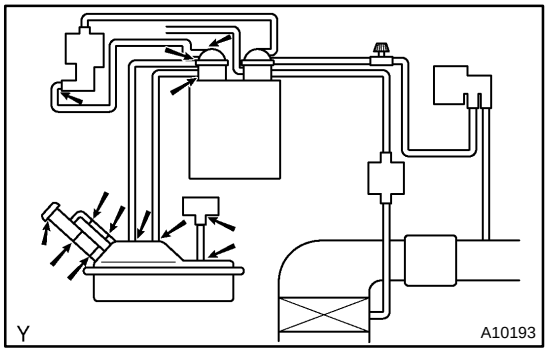

CHECK:

Check for cracks, deformation and loose connection of the following parts:

- Fuel tank
- Charcoal canister
- Fuel tank filler pipe
- Hoses and tubes around fuel tank and charcoal canister

NG → **Repair or replace.**

OK

18	**Check vacuum hoses between vapor pressure sensor and fuel tank, and charcoal canister and VSV for pressure switching valve.**

CHECK:

(a) Check that the vacuum hose is connected correctly.
(b) Check the vacuum hose for looseness and disconnection.
(c) Check the vacuum hose for cracks, hole and damage.

NG → **Repair or replace.**

OK

19	**Check vacuum hoses ((4), (5), (7) and (8) in Fig. 1 in description).**

CHECK:

(a) Check that the vacuum hose is connected correctly.
(b) Check the vacuum hose for looseness and disconnection.
(c) Check the vacuum hose for cracks, hole and damage.

NG → **Repair or replace.**

OK

20	**Check hose and tube between fuel tank and charcoal canister.**

CHECK:

(a) Check for proper connection of the fuel tank and fuel evap pipe (See page EC–8), fuel evap pipe and fuel tube under the floor, fuel tube under the floor and charcoal canister.
(b) Check the hose and tube for cracks, hole and damage.

NG → **Repair or replace.**

OK

21	**Check charcoal canister for cracks, hole and damage (See page EC–8).**

NG → **Repair or replace.**

OK

22	**Check voltage between terminals VC and E2 of ECM connector.**

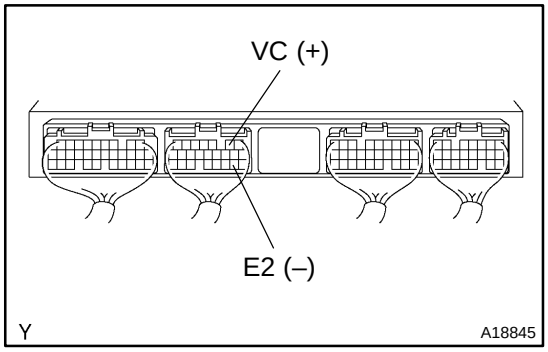

CHECK:

(a) Remove the grove compartment (See page SF–56).
(b) Turn the ignition switch ON.

CHECK:

Measure the voltage between terminals VC and E2 of the ECM connector.

OK:

Voltage: 4.5 – 5.5 V

NG → **Check and replace ECM (See page IN–28).**

OK

23	**Check voltage between terminals PTNK and E2 of ECM connectors.**

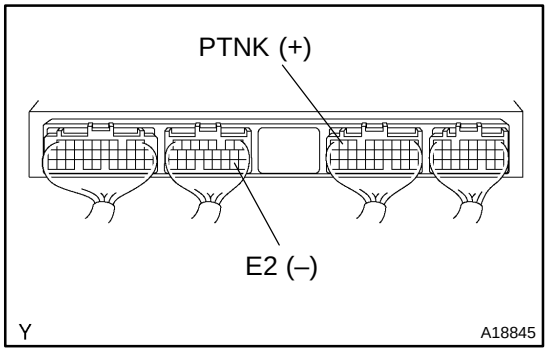

PREPARATION:

(a) Remove the grove compartment (See page SF–56).

(b) Turn the ignition switch ON.

CHECK:

Measure the voltage between terminals PTNK and E2 of the ECM connectors.

(1) Disconnect the vacuum hose from the vapor pressure sensor.

(2) Using the MITYVAC (Hand–held Vacuum Pump), apply a vacuum of 4.0 kPa (30 mmHg, 1.18 in.Hg) to the vapor pressure sensor.

NOTICE:

The vacuum applied to the vapor pressure sensor must be less than 66.7 kPa (500 mmHg, 19.7 in.Hg).

OK:

(1) Voltage: 2.9 – 3.7 V

(2) Voltage: 0.5 V or less

OK → **Go to step 25.**

NG

24	**Check for open and short in harness and connector between vapor pressure sensor and ECM (See page IN–28).**

NG → **Repair or replace harness or connector.**

OK

Replace vapor pressure sensor.

25	**Check fuel tank and fuel tank over fill check valve for cracks and damage.**

NG → **Replace fuel tank or fuel tank over fill check valve.**

OK

It is likely that vehicle user did not properly close fuel tank cap. Please explain to customer how to properly install fuel tank cap.

OBD II scan tool (excluding hand–held tester):

HINT:

Refer to DTC P0441 or P0446 on page DI–118.

DTC	P0450	Evaporative Emission Control System Pressure Sensor Malfunction

DTC	P0451	Evaporative Emission Control System Pressure Sensor Range/Performance

CIRCUIT DESCRIPTION

The vapor pressure sensor, VSV for canister closed valve (CCV) and VSV for pressure switching valve are used to detect abnormalities in the evaporative emission control system.
The ECM decides whether there is an abnormality in the evaporative emission control system based on the vapor pressure sensor signal.
DTC P0450 or P0451 is recorded by the ECM when the vapor pressure sensor malfunction.

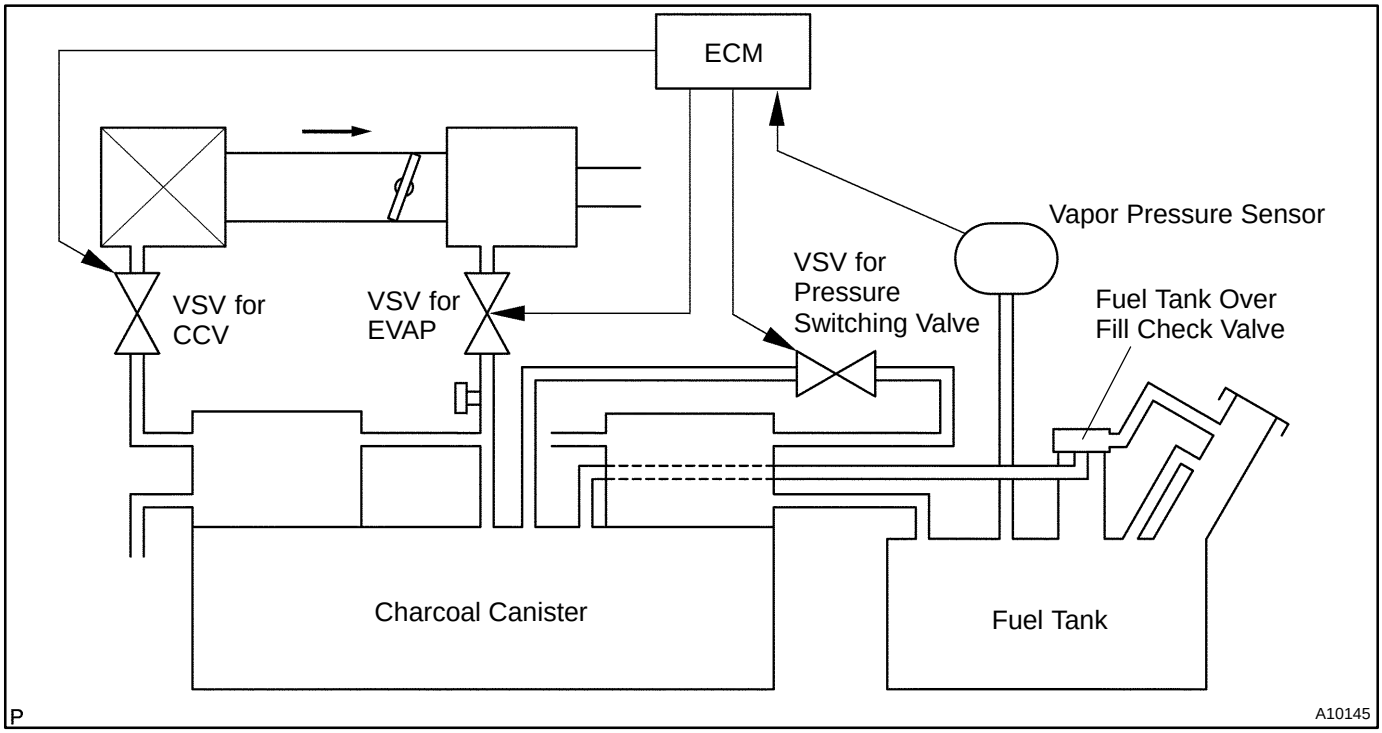

DTC No.	DTC Detecting Condition	Trouble Area
P0450	10 sec. or less after engine starting condition vapor pressure sensor fixed value continues for fixed value or more: (2 trip detection logic)	• Open or short in vapor pressure sensor circuit • Vapor pressure sensor • ECM
P0451	Vapor pressure sensor output extremely changes under conditions of (a) and (b): (2 trip detection logic) (a) Vehicle speed: 0 km/h (0mph), Engine speed: Idling and VSV for pressure switching valve is OFF (b) Vavor pressure sensor value ≧ opening pressure valve of charcoal canister	

WIRING DIAGRAM

Refer to DTCs P0441 and P0446 on page DI–118.

INSPECTION PROCEDURE

HINT:

- If DTC P0441, P0446, P0450 or P0451 is output with DTC P0442, P0456 first trouble shoot DTC P0441, P0446 P0450 or P0451. If no malfunction is detected, troubleshoot DTC P0440 next.
- Read freeze frame data using the hand–held tester or the OBD II scan tool. Because freeze frame records the engine conditions when a malfunction is detected. When troubleshooting, it is useful for determining whether the vehicle was running or stopped, the engine was warmed up or not, the air–fuel ratio was lean or rich, etc. at the time of the malfunction.
- When the ENGINE RUN TIME in the freeze frame data is less than 200 seconds, carefully check the vapor pressure sensor.

1	**Check voltage between terminals VC and E2 of ECM connector (See page DI–151, step 22).**

NG → **Check and replace ECM (See page IN–28).**

OK

2	**Check voltage between terminals PTNK and E2 of ECM connectors (See page DI–151, step 23).**

OK → **Check and replace ECM (See page IN–28).**

NG

3	**Check for open and short in harness and connector between vapor pressure sensor and ECM (See page IN–28).**

NG → **Repair or replace harness or connector.**

OK

Replace vapor pressure sensor.

DI8ZV–03

DTC	P0500	Vehicle Speed Sensor ”A”

CIRCUIT DESCRIPTION

The vehicle speed sensor outputs a 4–pulse signal for every revolution of the rotor shaft, which is rotated by the transmission output shaft via the driven gear. After this signal is converted into a more precise rectangular waveform by the waveform shaping circuit inside the combination meter, it is then transmitted to the ECM. The ECM determines the vehicle speed based on the frequency of these pulse signals.

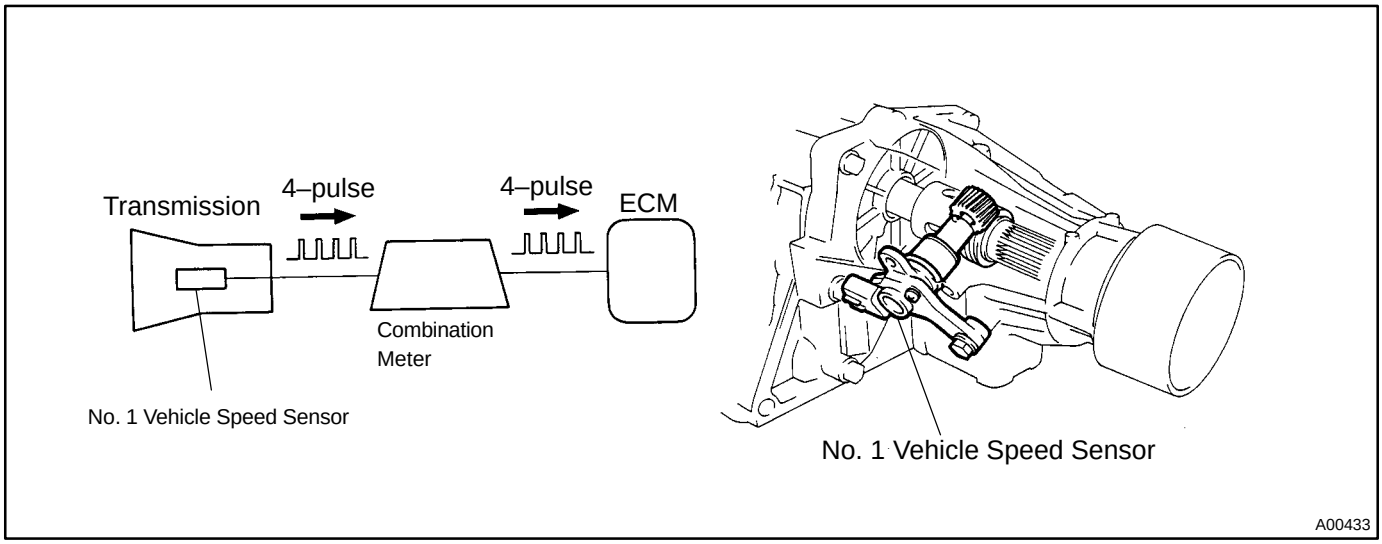

DTC No.	DTC Detection Condition	Trouble Area
P0500	No vehicle speed sensor signal to ECM under following conditions: (2 trip detection logic) For A/T: (a) Park/neutral position switch is OFF (b) Vehicle is being driven For M/T: (a) Engine speed is between 2,000 rpm and 4,000 rpm (2RZ–FE)/5,000 rpm (3RZ–FE)	• Combination meter • Open or short in No. 1 vehicle speed sensor circuit • ECM • No. 1 vehicle speed sensor

WIRING DIAGRAM

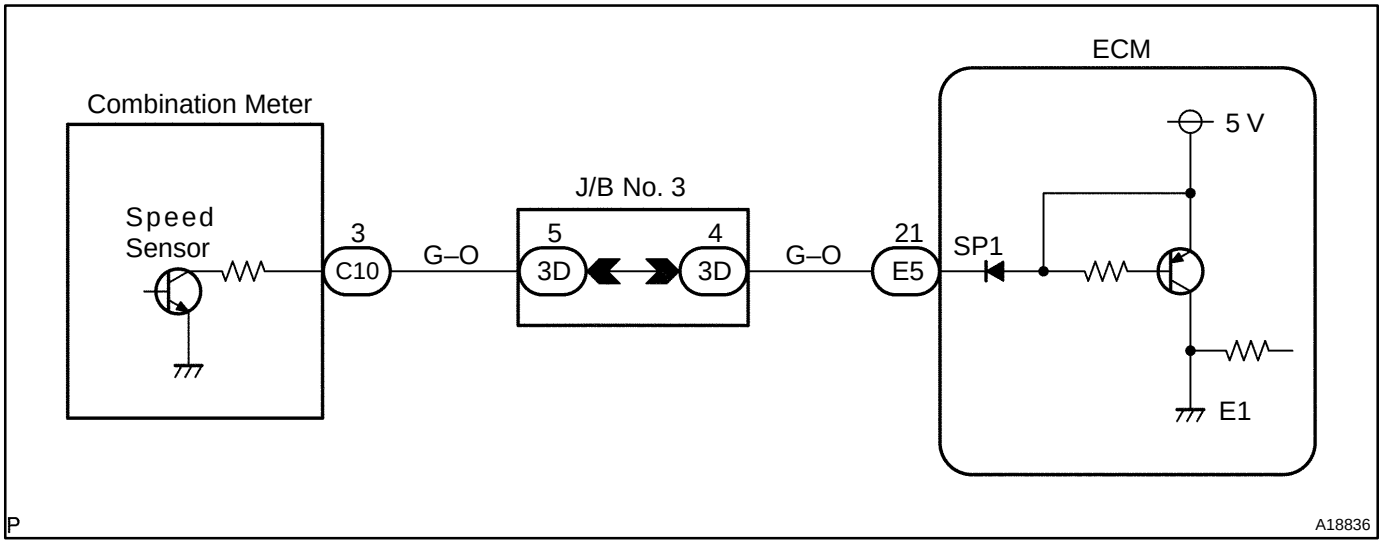

INSPECTION PROCEDURE

HINT:

Read freeze frame data using the hand–held tester or the OBD II scan tool, as freeze frame data records the engine conditions when a malfunction is detected, when troubleshooting it is useful for determining whether the vehicle was running or stopped, the engine warmed up or not, the air–fuel ratio lean or rich, etc. at the time of the malfunction.

1	**Check operation of speedometer.**

CHECK:

Drive the vehicle and check if the operation of the speedometer in the combination meter is normal.

HINT:

The vehicle speed sensor is operating normally if the speedometer display is normal.

NG → **Check speedometer (See page BE–39).**

OK

2	**Check voltage between terminal SP1 of ECM connector and body ground.**

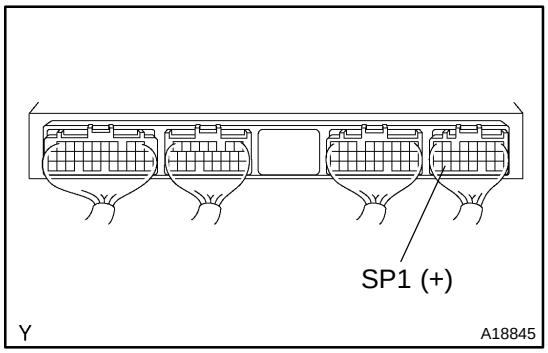

PREPARATION:

(a) Remove the glove compartment (See page SF–55).
(b) Disconnect the cruise control ECU connector.
(c) Shift the shift lever the to neutral.
(d) Jack up the rear wheels on one side.
(e) Turn the ignition switch ON.

CHECK:

Measure the voltage between terminal SP1 of the ECM connector and the body ground when the wheel is turned slowly.

OK:

Voltage is generated intermittently.

NG → **Check and repair harness and connector between combination meter and ECM.**

OK

Check and replace ECM (See page IN–28).

DI135–15

DTC	P0505	Idle Air Control System

DTC	P0511	Idle Air Control Circuit

CIRCUIT DESCRIPTION

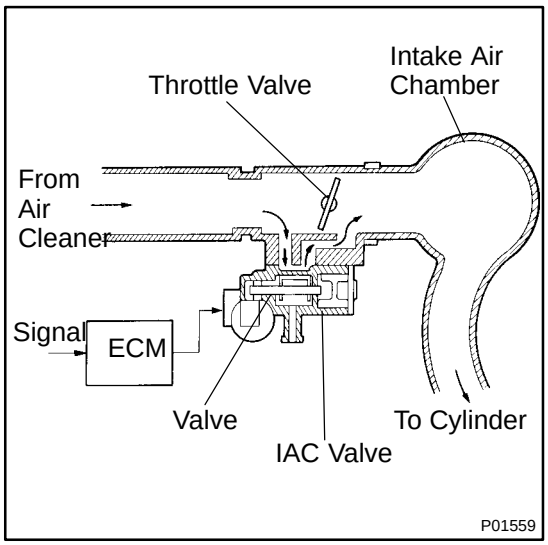

The rotary solenoid type IAC valve is located in front of the intake air chamber and intake air bypassing the throttle valve is directed to the IAC valve through a passage.
In this way the intake air volume bypassing the throttle valve is regulated, controlling the engine speed.
The ECM operates only the IAC valve to perform idle–up and provide feedback for the target idling speed.

DTC No.	DTC Detection Condition	Trouble Area
P0505 P0511	Idle speed continues to vary greatly from target speed	• PCV hose connection • PCV hose • Open or short in IAC valve circuit • IAC valve is stuck or closed • Open or short in A/C switch circuit • Air induction system • ECM

WIRING DIAGRAM

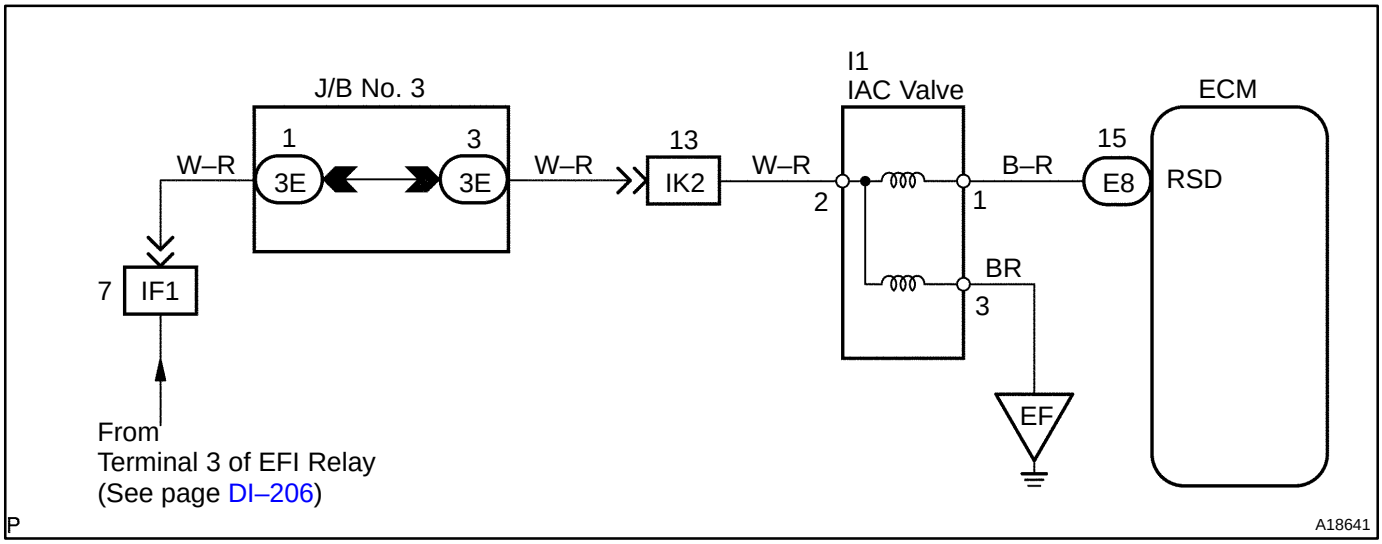

INSPECTION PROCEDURE

HINT:

- In case of using the hand–held tester, start the inspection from step 1 and in case of not using the hand–held tester, start from step 2.
- Read freeze frame data using the hand–held tester or the OBD II scan tool, as freeze frame data records the engine conditions when a malfunction is detected. When troubleshooting, it is useful for determining whether the vehicle was running or stopped, the engine was warmed up or not, the air–fuel ratio was lean or rich, etc. at the time of the malfunction.

1	**Check engine idle speed.**

PREPARATION:

(a) Warm up the engine to normal operating temperature.
(b) Switch off the all accessories.
(c) Switch off the A/C.
(d) Shift the transmission into the N or neutral position.
(e) Connect the hand–held tester or OBD II scan tool to the DLC3 on the vehicle.
(f) Select the ACTIVE TEST mode on the hand–held tester.

CHECK:

Check the engine speed when the ISC valve is operated by hand–held tester.

OK:

Engine speed increases and decreases in response to the change of ISC duty ratio.

OK → **Go to step 5.**

NG

2	**Check air induction system (See page SF–1).**

NG → **Repair or replace.**

OK

3	**Check connection of PCV hose.**

NG → **Repair or replace PCV hose.**

OK

4	**Check for A/C signal circuit (See page AC–14).**

NG → **Repair or replace.**

OK

5	**Check voltage between terminals RSD of ECM connector and body ground.**

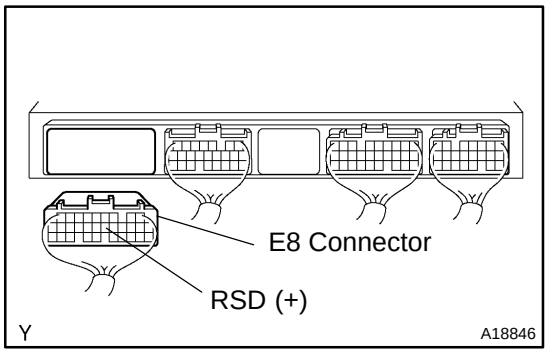

PREPARATION:

(a) Remove the glove compartment (See page SF–55).
(b) Disconnect the E8 connector from the ECM.
(c) Turn the ignition switch ON.

CHECK:

Measure the voltage between terminals RSD of ECM connector and the body ground,

OK:

Voltage: 9 – 14 V

OK → **Go to step 7.**

NG

6	**Check IAC valve (See page SF–33).**

NG → **Replace IAC valve.**

OK

Check for open and short in harness and connector between engine room R/B and IAC valve, and IAC valve and ECM (See page IN–28).

7	**Check operation of IAC valve (See page SF–36).**

NG → **Repair or replace IAC valve.**

OK

8	**Check blockage of IAC valve and passage to bypass throttle valve.**

NG → **Repair or replace IAC valve.**

OK

Check and replace ECM (See page IN–28).

DI139–14

DTC	P0560	System Voltage

CIRCUIT DESCRIPTION

Battery positive voltage is supplied to terminal BATT of the ECM even when the ignition switch is OFF for use by the DTC memory and air–fuel ratio adaptive control value memory, etc.

DTC No.	DTC Detection Condition	Trouble Area
P0560	Open in back up power source circuit	• Open in back up power source circuit • ECM

HINT:

If DTC P0560 appear, the ECM does not store another DTC.

WIRING DIAGRAM

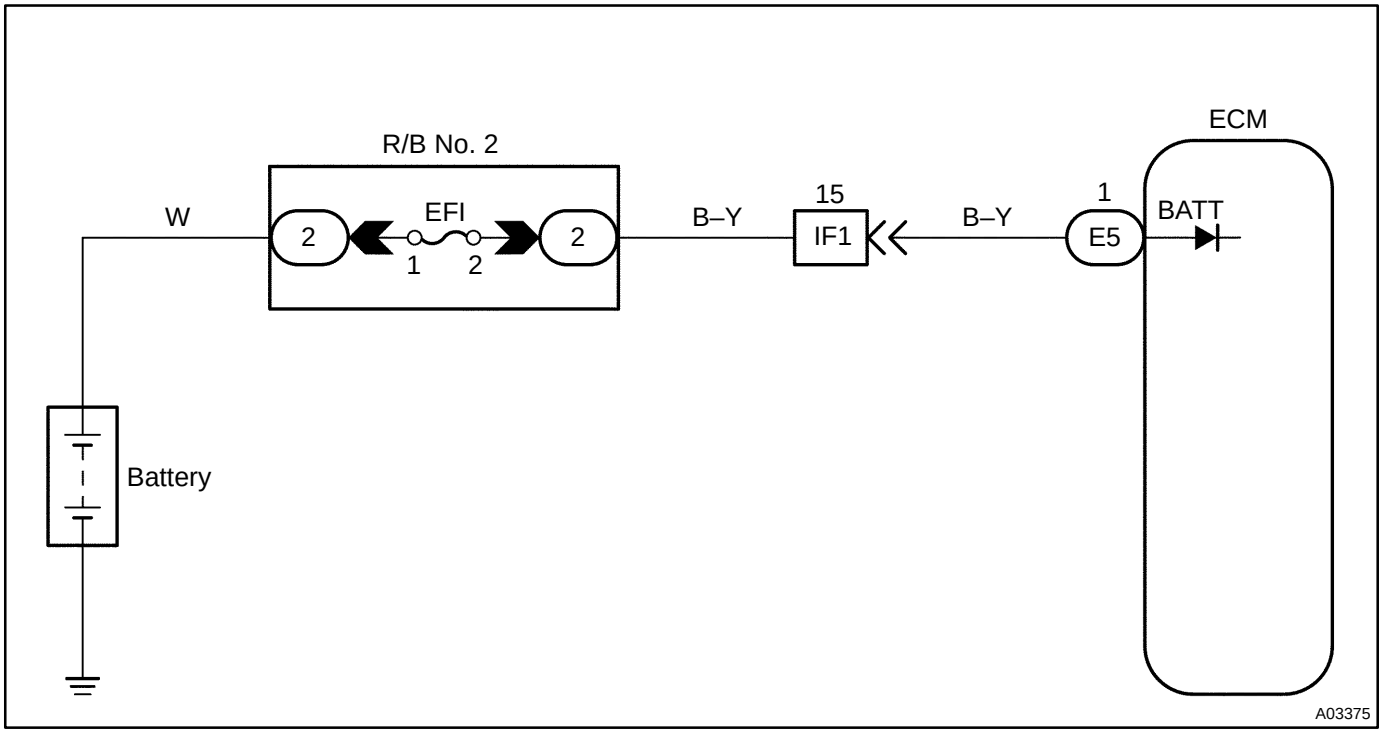

INSPECTION PROCEDURE

HINT:

Read freeze frame data using the hand–held tester or the OBD II scan tool, as freeze frame data records the engine conditions when a malfunction is detected. When troubleshooting, it is useful for determining whether the vehicle was running or stopped, the engine was warmed up or not, the air–fuel ratio was lean or rich, etc. at the time of the malfunction.

1	Check voltage between terminal BATT of ECM connector and body ground.

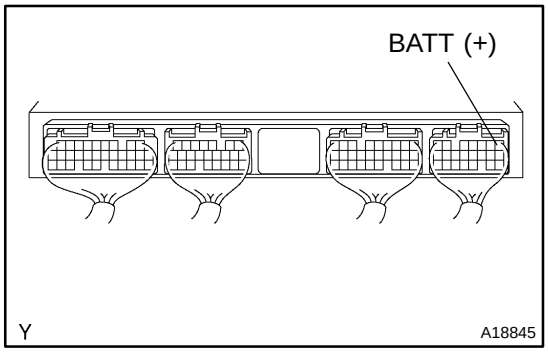

PREPARATION:
Remove the glove compartment (See page SF–55).
CHECK:
Measure the voltage between terminal BATT of the ECM connector and the body ground.
OK:
Voltage: 9 – 14 V

OK	Check and replace ECM (See page IN–28).

NG

2	Check EFI fuse.

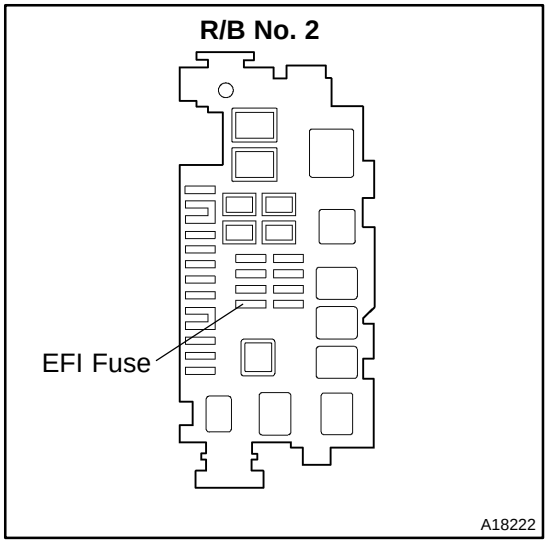

PREPARATION:
Remove the EFI fuse from the R/B No. 2.
CHECK:
Check the continuity of the EFI fuse.
OK:
Continuity

NG	Check for short in all harness and components connected to EFI fuse.

OK

Check and repair harness or connector between battery and EFI fuse, and EFI fuse and ECM.

DIB2H–01

DTC	P0617	Starter Relay Circuit High

CIRCUIT DESCRIPTION

While the engine is being cranked, the battery positive voltage is applied to terminal STA of the ECM.

DTC No.	DTC Detection Condition	Trouble Area
P0617	When all conditions (a), (b) and (c) are satisfied with battery (+B) voltage 10.5 V or more (a) Vehicle speed ≧ 20 km/h (6 mph) (b) Engine revolution ≧ 1,000 rpm (c) STA signal ON	• Short in park/neutral position (PNP) switch (A/T) or clutch start switch (M/T) circuit • Park/neutral position (PNP) switch (A/T) • Clutch start switch (M/T) • Ignition switch • ECM

WIRING DIAGRAM

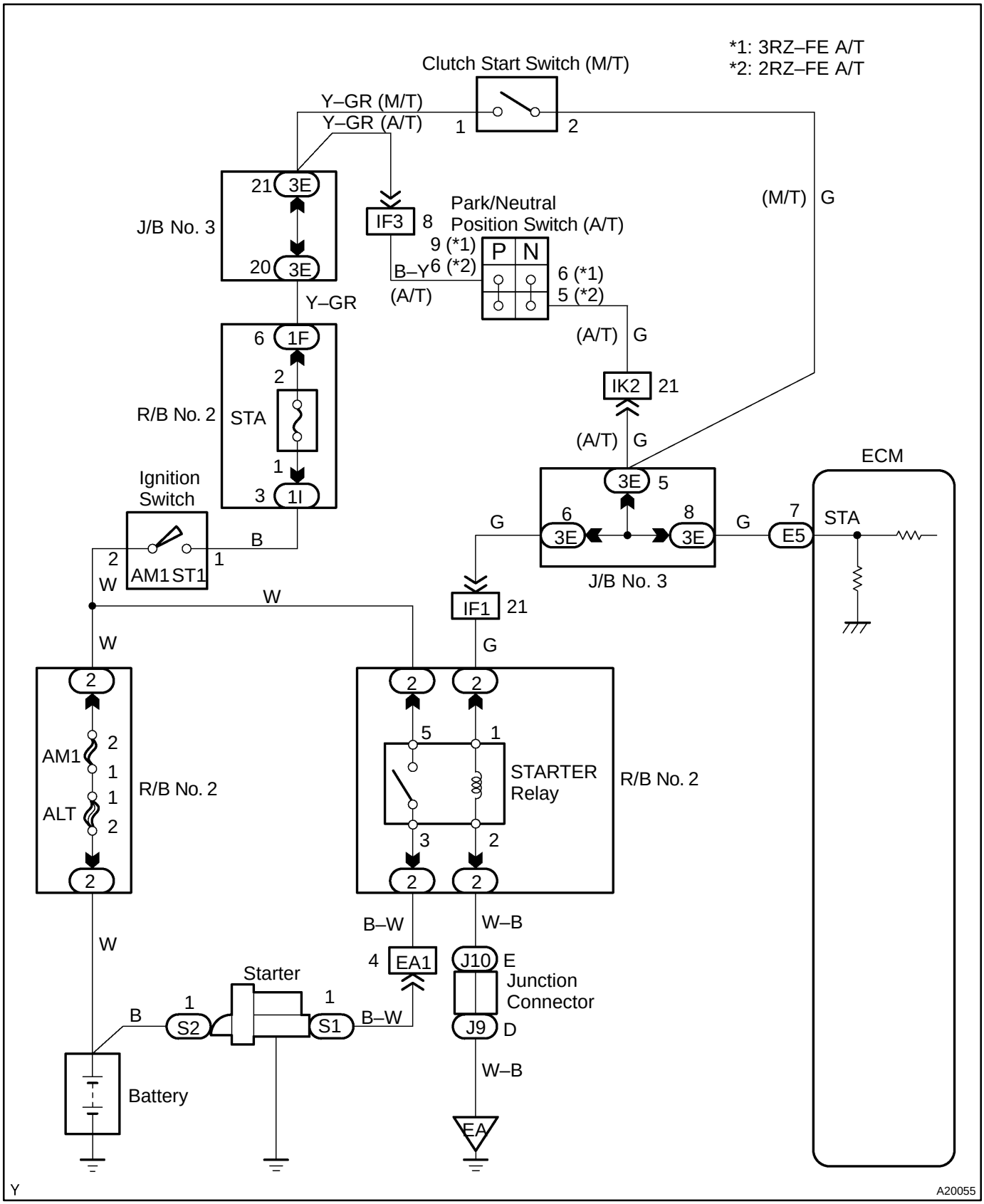

INSPECTION PROCEDURE

HINT:

Read freeze frame data using the hand–held tester or the OBD II scan tool, as freeze frame data records the engine conditions when a malfunction is detected. When troubleshooting, it is useful for determining whether the vehicle was running or stopped, the engine was warmed up or not, the air–fuel ratio was lean or rich, etc. at the time of the malfunction.

Hand–held tester:

1	**Connect hand–held tester, and check STA signal.**

PREPARATION:

(a) Connect the hand–held tester to the DLC3.
(b) Turn the ignition switch ON and push the hand–held tester main switch ON.
(c) Select the item ”DIAGNOSIS/ENHANCED OBD II/DATA LIST/ALL/STARTER SIG”.

CHECK:

Read the STA signal on the hand–held tester while the starter operates.

OK:

Ignition Switch Position	ON	START
STA Signal	OFF	ON

OK → **Check and replace ECM (See page IN–28)**

NG

2	**Check ignition switch (See page BE–14).**

NG → **Replace ignition switch (Go to next step after the replacement).**

OK

3	**Connect hand–held tester, and check STA signal.**

PREPARATION:

(a) Connect the hand–held tester to the DLC3.
(b) Turn the ignition switch ON and push the hand–held tester main switch ON.
(c) Select the item ”DIAGNOSIS/ENHANCED OBD II/DATA LIST/ALL/STARTER SIG”.

CHECK:

Read the STA signal on the hand–held tester while the starter operates.

OK:

Ignition Switch Position	ON	START
STA Signal	OFF	ON

OK	System OK.

NG

4	Check park/neutral position (PNP) switch (A/T) (See page DI–482) or clutch start switch (M/T) (See page CL–2).

NG	Replace park/neutral position switch or clutch start switch (Go to next step after the replacement).

OK

5	Connect hand–held tester, and check STA signal.

PREPARATION:

(a) Connect the hand–held tester to the DLC3.
(b) Turn the ignition switch ON and push the hand–held tester main switch ON.
(c) Select the item ”DIAGNOSIS/ENHANCED OBD II/DATA LIST/ALL/STARTER SIG”.

CHECK:

Read the STA signal on the hand–held tester while the starter operates.

OK:

Ignition Switch Position	ON	START
STA Signal	OFF	ON

OK	System OK.

NG

Check for short in harness and connector between ECM and park/neutral position (PNP) switch (A/T) (See page DI–482) or clutch start switch (M/T) (See page IN–28)

OBD II scan tool (excluding hand–held tester):

1	**Check voltage between terminal STA of ECM connector and body ground.**

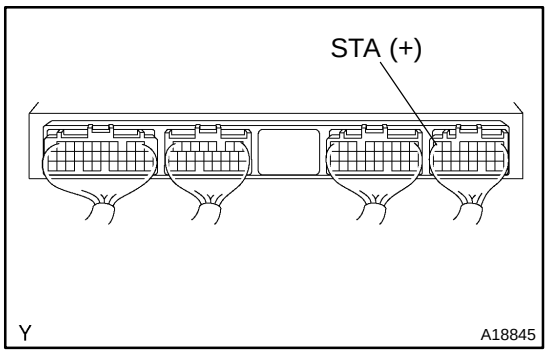

PREPARATION:
Remove the glove compartment (See page SF–56).
CHECK:
Measure the voltage between terminal STA of the ECM connector and the body ground, during the engine cranking (ignition switch START position) and does not engine cranking (ignition switch position ON).
OK:

Voltage:
6 V or more (ignition switch START position)
0 V (ignition switch ON position)

OK	**Check and replace ECM (See page IN–28)**

NG

2	**Check ignition switch (See page BE–14).**

NG	**Replace ignition switch (Go to next step after the replacement).**

OK

3	**Check voltage between terminal STA of ECM connector and body ground.**

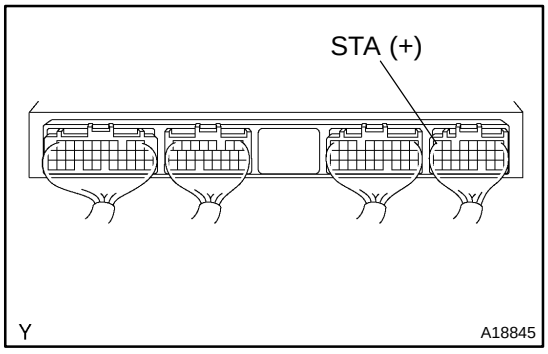

PREPARATION:
Remove the glove compartment (See page SF–56).
CHECK:
Measure the voltage between terminal STA of the ECM connector and the body ground, during the engine cranking (ignition switch START position) and does not engine cranking (ignition switch position ON).
OK:

Voltage:
6 V or more (ignition switch START position)
0 V (ignition switch ON position)

OK → System OK.

NG

4	Check park/neutral position (PNP) switch (A/T) (See page DI–482) or clutch start switch (M/T) (See page CL–2).

NG → Replace park/neutral position switch or clutch start switch (Go to next step after the replacement).

OK

5	Check voltage between terminal STA of ECM connector and body ground.

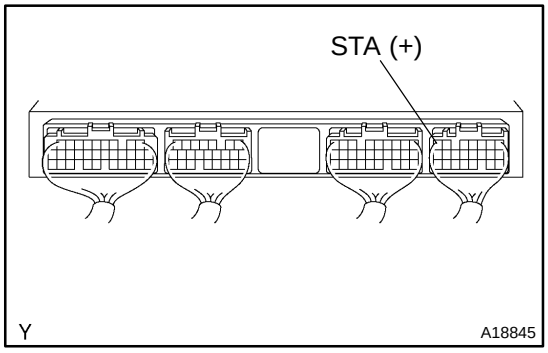

PREPARATION:
Remove the glove compartment (See page SF–56).
CHECK:
Measure the voltage between terminal STA of the ECM connector and the body ground, during the engine cranking (ignition switch START position) and does not engine cranking (ignition switch position ON).
OK:

Voltage:
6 V or more (ignition switch START position)
0 V (ignition switch ON position)

OK → System OK.

NG

Check for short in harness and connector between ECM and park/neutral position (PNP) switch (A/T) (See page DI–482) or clutch start switch (M/T) (See page IN–28)

DTC	P0705	Transmission Range Sensor Malfunction (PRNDL Input)

DTC	P0850	Park/Neutral Switch Input Circuit

CIRCUIT DESCRIPTION

The park/neutral position switch go on when the shift lever is in the N or P shift position. When it goes on terminal NSW of the ECM is grounded to body ground via the starter relay, thus the terminal NSW voltage becomes 0V. When the shift lever is in the D, 2, L or R position, the park/neutral position switch goes off, so the voltage of ECM. Terminal NSW becomes battery voltage, the voltage of the ECM internal power source. If the shift lever is moved from the N position to the D position, this signal is used for air–fuel ratio correction and for idle speed control (estimated control), etc.

DTC No.	DTC Detection Condition	Trouble Area
P0705 P0850	2 or more switches are ON simultaneously for P, R, N, D, 2 and L position (2 trip detection logic)	• Open in park/neutral position switch circuit • Park/neutral position switch • ECM
	When driving under conditions (a) and (b) for 30 sec. or more park/neutral position switch is ON (N position): (2 trip detection logic) (a) Vehicle speed: 70 km/h (44 mph) or more (b) Engine speed: 1,500 – 2,500 rpm	

HINT:
After confirming DTC P0705 and P0850 use the hand–held tester to confirm the PNP switch signal from the ”DIAGNOSIS/ENHANCED OBD II/DATA LIST/ALL/PNP SW [NSW]”.

WIRING DIAGRAM

Refer to DTC P0705, P0850 on page DI–482.

INSPECTION PROCEDURE

Refer to DTC P0705, P0850 on page DI–482.

DI138–12

DTC	P0724	Brake Switch ”B” Circuit High

CIRCUIT DESCRIPTION

This signal is used to detect when the brakes have been applied. The STP signal voltage is the same as the voltage supplied to the stop lights.
The STP signal is used mainly to control the fuel cut–off engine speed (The fuel cut–off engine speed is reduced slightly when the vehicle is braking.).

DTC No.	DTC Detection Condition	Trouble Area
P0724	The stop light switch does not turn off even once vehicle is driven (2 trip detection logic)	• Short in stop light switch signal circuit • Stop light switch • ECM

WIRING DIAGRAM

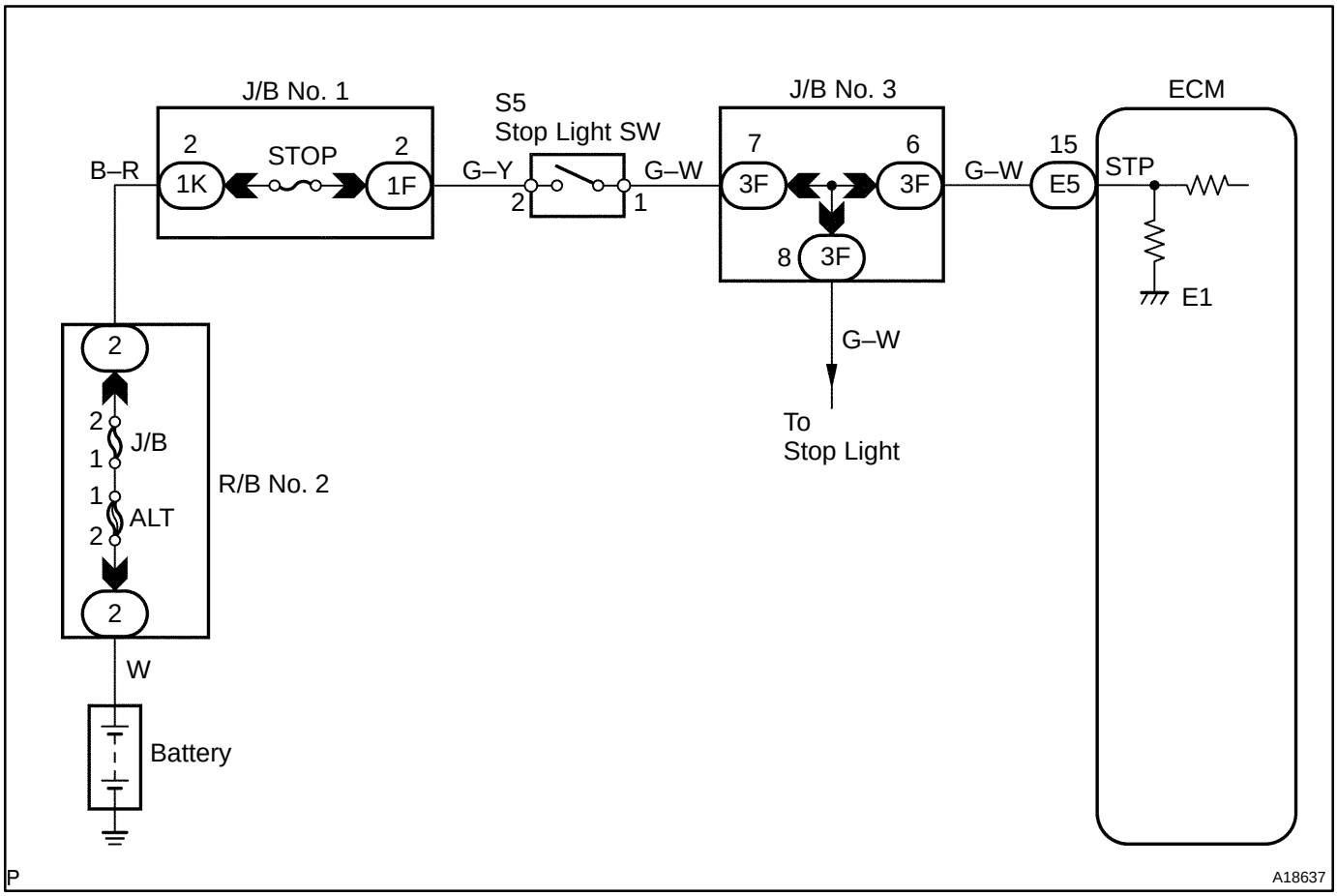

INSPECTION PROCEDURE

HINT:

Read freeze frame data using the hand–held tester or the OBD II scan tool, as freeze frame data records the engine conditions when a malfunction is detected. When troubleshooting, it is useful for determining whether the vehicle was running or stopped, the engine was warmed up or not, the air–fuel ratio was lean or rich, etc. at the time of the malfunction.

1	**Check operation of stop light.**

CHECK:

Check if the stop lights go on and off normally when the brake pedal is depressed and released.

NG → **Check and repair stop light circuit and stop light swtch (See page BE–29).**

OK

2	Check STP signal.

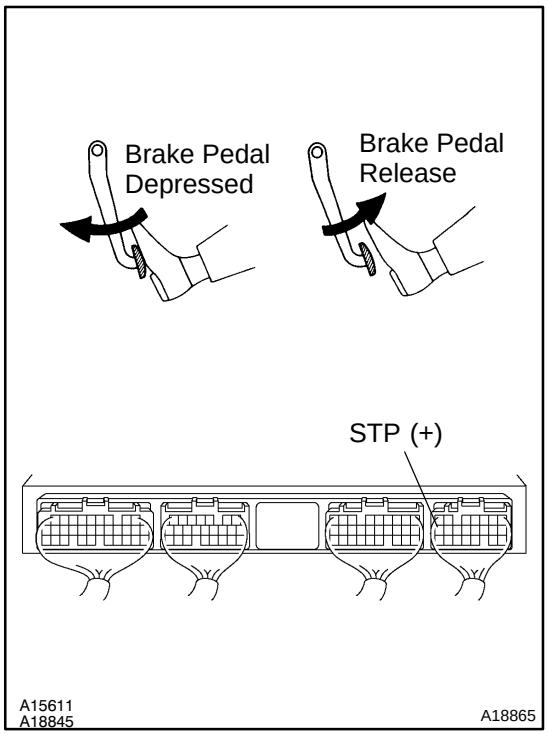

When using hand–held tester:

PREPARATION:

(a) Connect the hand–held tester to the DLC3.

(b) Turn the ignition switch ON and push the hand–held tester main switch ON.

(c) Select the item ”DIAGNOSIS/ENHANCED OBD II/DATA LIST/ALL/STOP LIGHT SW”.

CHECK:

Read the STP signal on the hand–held tester.

OK:

Brake Pedal	STP Signal
Depressed	ON
Released	OFF

When not using hand–held tester:

PREPARATION:

(a) Remove the glove compartement (See page SF–55).

(b) Turn the ignition switch ON.

CHECK:

Check the voltage between terminal STP of the ECM connector and the body ground.

OK:

Brake Pedal	Voltage
Depressed	7.5 – 14 V
Released	Below 1.5 V

OK → **Check for intermittent problems (See page DI–3).**

NG

3	Check harness and connector between ECM and stop light switch (See page IN–28).

NG → **Repair or replace harness or connector.**

OK

Check and replace ECM (See page IN–28).

DI136–15

DTC	P0351	Ignition Coil ”A” Primary/Secondary Circuit

DTC	P0352	Ignition Coil ”B” Primary/Secondary Circuit

DTC	P0353	Ignition Coil ”C” Primary/Secondary Circuit

DTC	P0354	Ignition Coil ”D” Primary/Secondary Circuit

CIRCUIT DESCRIPTION

HINT:

- There DTCs indicate a malfunction related to primary circuit.
- If DTC P0351 is displayed, check No. 1 ignition coil with igniter circuit.
- If DTC P0352 is displayed, check No. 2 ignition coil with igniter circuit.
- If DTC P0353 is displayed, check No. 3 ignition coil with igniter circuit.
- If DTC P0354 is displayed, check No. 4 ignition coil with igniter circuit.

A Direct Ignition System (DIS) has been adopted. The DIS improves the ignition timing accuracy, reduces high–voltage loss, and enhances the the overall reliability of the ignition system by eliminating the distributor. The DIS is a 1–cylinder ignition system which ignites one cylinder with one ignition coil. In the 1–cylinder ignition system, the one spark plug is connected to the end of the secondary winding. High voltage generated in the secondary winding is applied directly to the spark plug. The spark of the spark plug pass from the center electrode to the ground electrode.

The ECM determines ignition timing and outputs the ignition signal (IGT) for each cylinder. Based on IGT signals, the power transistors in the igniter cuts off the current to the primary coil in the ignition coil is supplied to the spark plug that are connected to the end of the secondary coil. At the same time, the igniter also sends an ignition confirmation signal (IGF) as a fail–safe measure to the ECM.

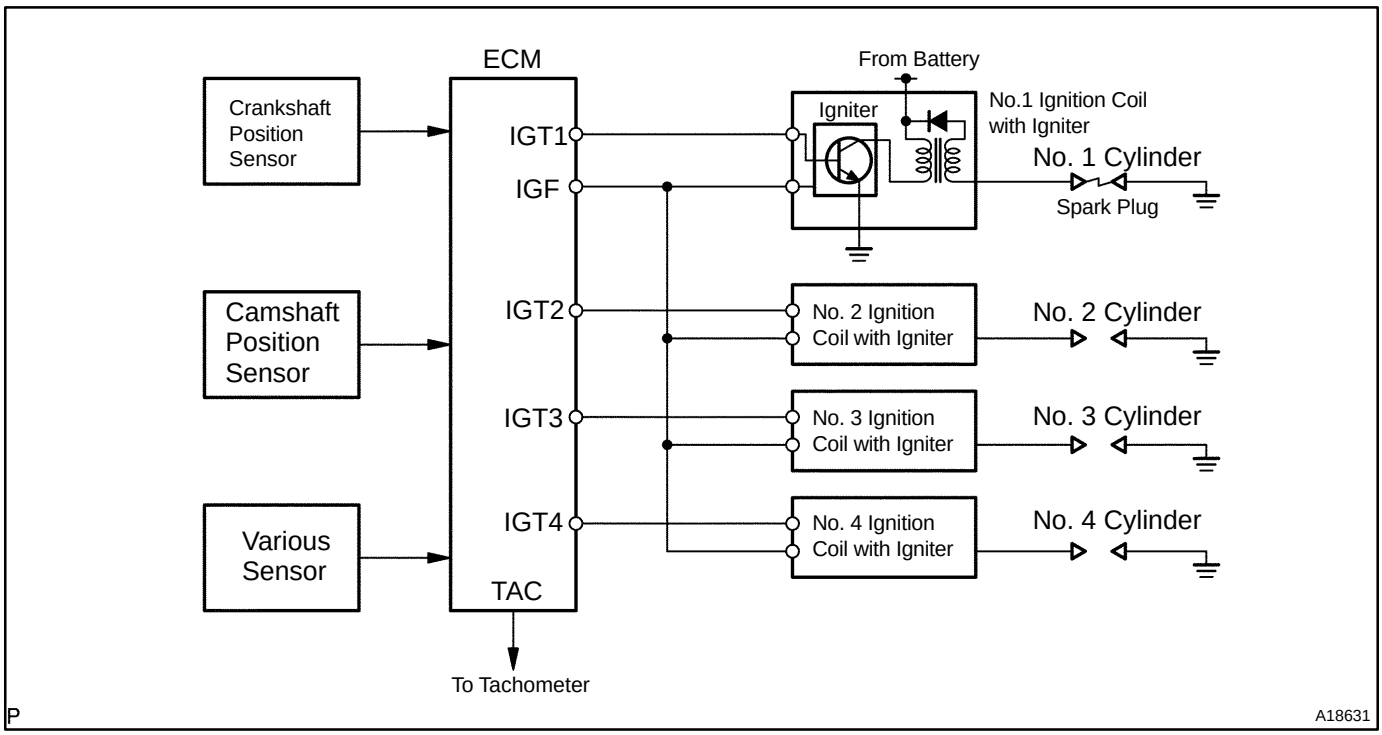

DTC No.	DTC Detection Condition	Trouble Area
P0351 P0352 P0353 P0354	No IGF signal to ECM while engine is running	• Ignition system • Open or short in IGF and IGT circuit from ignition coil with igniter • Ignition coil with igniter • ECM

WIRING DIAGRAM

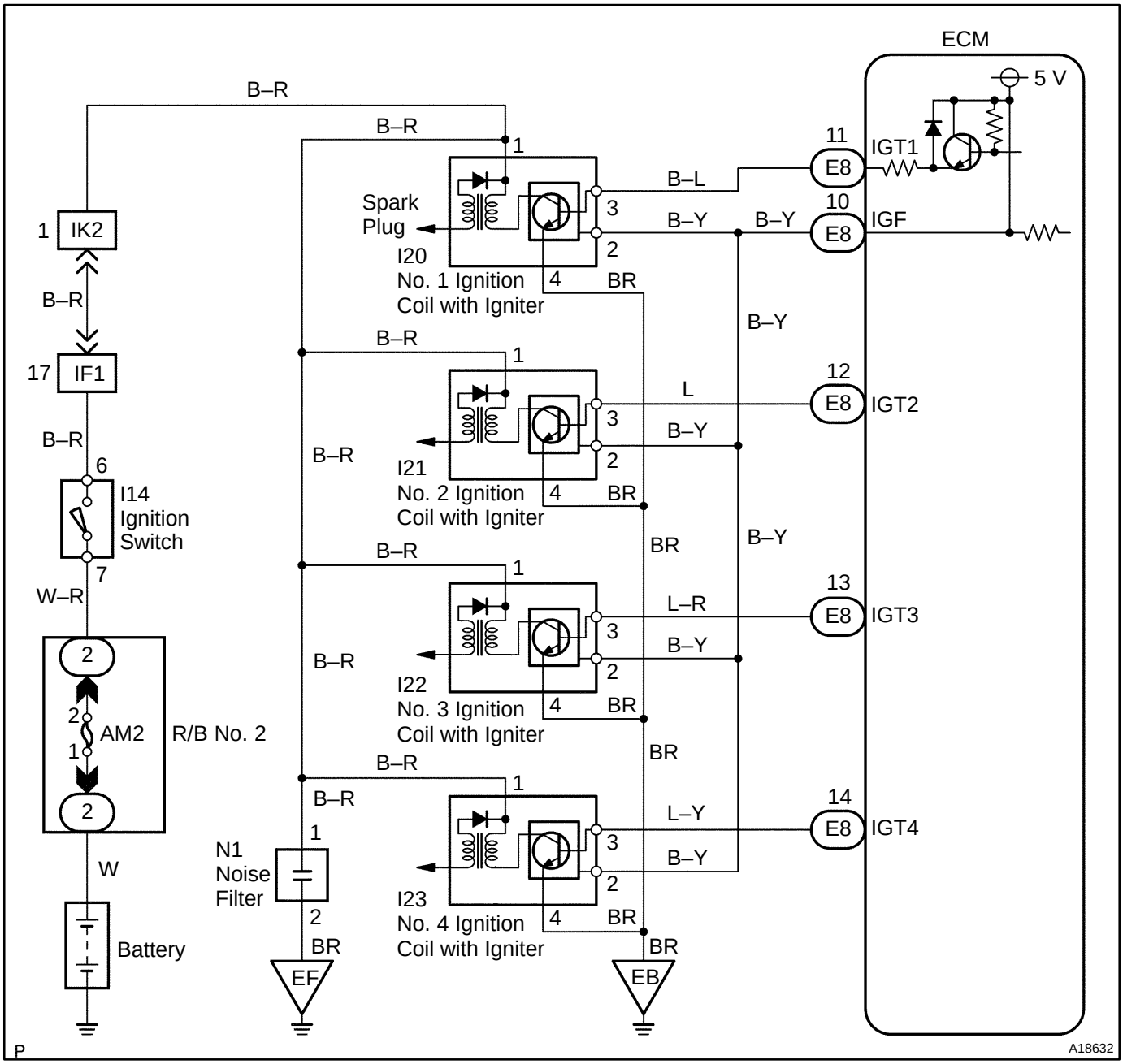

INSPECTION PROCEDURE

HINT:

Read freeze frame data using the hand–held tester or the OBD II scan tool, as freeze frame data records the engine conditions when a malfunction is detected. When troubleshooting, it is useful for determining whether the vehicle was running or stopped, the engine was warmed up or not, the air–fuel ratio was lean or rich, etc. at the time of the malfunction.

1	**Check spark plug and spark of misfiring cylinder (See page DI–77).**

NG → **Go to step 4.**

OK

2	**Check for open and short in harness and connector in IGF and IGT signal circuit between ECM and ignition coil with igniter (See page IN–28).**

NG → **Repair or replace harness or connector.**

OK

3	**Disconnect ignition coil with igniter connector, and check voltage between terminal IGF of ECM connector and body ground.**

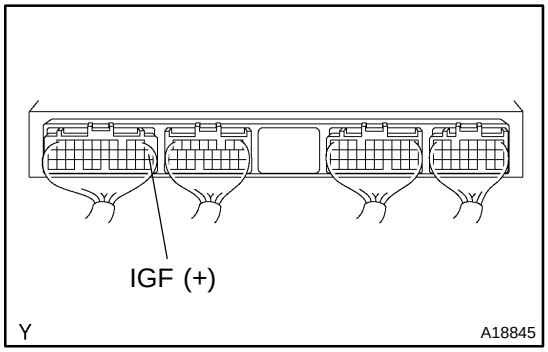

PREPARATION:

(a) Disconnect the ignition coil with the igniter connector.
(b) Remove the glove compartment (See page SF–55).
(c) Turn the ignition switch ON.

CHECK:

Measure the voltage between terminal IGF of the ECM connector and the body ground.

OK:

Voltage: 4.5 – 5.5 V

OK → **Replace ignition coil with igniter.**

NG

Check and replace ECM (See page IN–28).

4	**Check for open and short in harness and connector in IGT signal circuit between ECM and ignition coil with igniter (See page IN–28).**

NG → **Repair or replace harness or connector.**

OK

5	Disconnect ignition coil with igniter connector, and check voltage between terminals IGT1 – IGT4 of ECM connector and body ground.

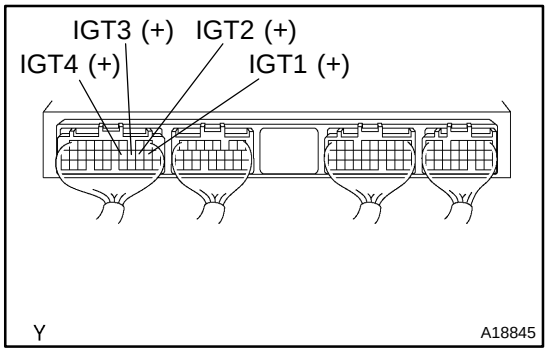

PREPARATION:

(a) Disconnect the ignition coil with the igniter connector.

(b) Remove the glove compartment (See page SF–55).

CHECK:

Measure the voltage between terminals IGT1 – IGT4 of the ECM connector and the body ground when the engine is cranked.

OK:

Voltage: More than 0.1 V and less than 4.5 V

NG	Check and replace ECM (See page IN–28).

OK

6	Check voltage between terminals IGT1 – IGT4 of ECM connector and body ground.

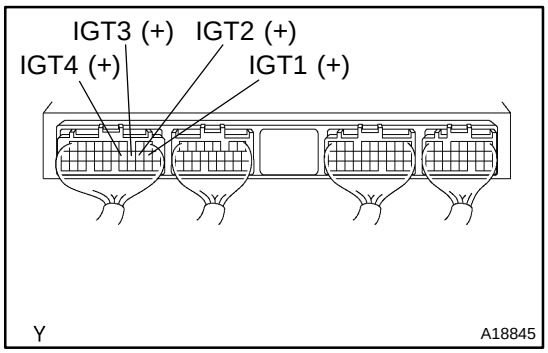

PREPARATION:

Remove the grove compartment (See page SF–55).

CHECK:

Measure the voltage between terminals IGT1 – IGT4 of the ECM connector and the body ground when the engine is cranked.

OK:

Voltage: More than 0.1 V and less than 4.5 V

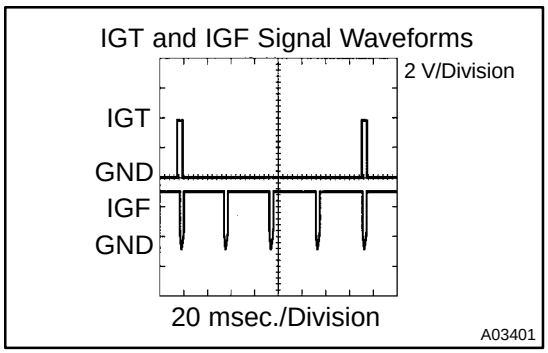

Reference: INSPECTION USING OSCILLOSCOPE

During idling, check the waveforms between terminals IGT1 – IGT4 and E1, and IGF and E1 of the ECM connector.

HINT:

The correct waveforms are as shown.

NG	Replace ignition coil with igniter.

OK

7	Check ignition coil with igniter power source circuit.

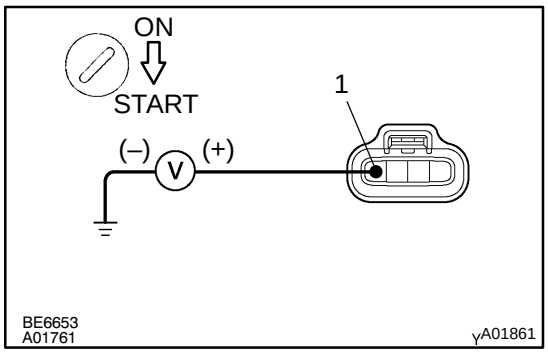

PREPARATION:
Disconnect the ignition coil with the igniter connector.
CHECK:
Measure the voltage between terminal 1 of the ignition coil with the igniter connector and the body ground when the ignition switch is turned to ON and STA position.
OK:
Voltage: 9 – 14 V

NG → **Repair ignition coil with igniter power source circuit.**

OK

8	Check for open and short in harness and connector between ignition switch and ignition coil with igniter (See page IN–28).

NG → **Repair or replace harness or connector.**

OK

Replace ignition coil with igniter.

DI12A–08

CUSTOMER PROBLEM ANALYSIS CHECK

ENGINE CONTROL SYSTEM Check Sheet

Inspector's Name _____

Customer's Name		Model and Model Year	
Driver's Name		Frame No.	
Date Vehicle Brought in		Engine Model	
License No.		Odometer Reading	km miles

Problem Symptoms	☐ Engine does not Start	☐ Engine does not crank ☐ No initial combustion ☐ No complete combustion
	☐ Difficult to Start	☐ Engine cranks slowly ☐ Other _____
	☐ Poor Idling	☐ Incorrect first idle ☐ Idling rpm is abnormal ☐ High (rpm) ☐ Low (rpm) ☐ Rough idling ☐ Other _____
	☐ Poor Driveability	☐ Hesitation ☐ Back fire ☐ Muffler explosion (after–fire) ☐ Surging ☐ Knocking ☐ Other _____
	☐ Engine Stall	☐ Soon after starting ☐ After accelerator pedal depressed ☐ After accelerator pedal released ☐ During A/C operation ☐ Shifting from N to D ☐ Other _____
	☐ Others	

Date Problem Occurred		
Problem Frequency		☐ Constant ☐ Sometimes (times per day/month) ☐ Once only ☐ Other _____
Condition When Problem Occurs	Weather	☐ Fine ☐ Cloudy ☐ Rainy ☐ Snowy ☐ Various/Other _____
	Outdoor Temperature	☐ Hot ☐ Warm ☐ Cool ☐ Cold (approx. ____˚F/____˚C)
	Place	☐ Highway ☐ Suburbs ☐ Inner city ☐ Uphill ☐ Downhill ☐ Rough road ☐ Other _____
	Engine Temperature	☐ Cold ☐ Warming up ☐ After warming up ☐ Any temperature ☐ Other _____
	Engine Operation	☐ Starting ☐ Just after starting (min.) ☐ Idling ☐ Racing ☐ Driving ☐ Constant speed ☐ Acceleration ☐ Deceleration ☐ A/C switch ON/OFF ☐ Other _____

Condition of MIL		☐ Remains on ☐ Sometimes lights up ☐ Does not light up
DTC Inspection	Normal Mode (Pre–check)	☐ Normal ☐ Malfunction code(s) (code) ☐ Freeze frame data ( )
	Check Mode	☐ Normal ☐ Malfunction code(s) (code) ☐ Freeze frame data ( )

DI12C–31

DIAGNOSTIC TROUBLE CODE CHART

HINT:

Parameters listed in the chart may not be exactly the same as your readings due to the type of instrument or other factors.

If a malfunction code is displayed during the DTC check in the check mode, check the circuit for the codes listed in the table below. For details of each code, refer to the ''See page'' under the respective ''DTC No.'' in the DTC chart.

DTC No. (See page)	Detection Item	Trouble Area	MIL*1	Memory
P0036 (DI–25)	Oxygen Sensor Heater Control Circuit (Bank 1 Sensor 2)	• Open or short in heater circuit of heated oxygen sensor • Heated oxygen sensor heater • EFI main relay • ECM	○	○
P0100 (DI–28)	Mass or Volume Air Flow Circuit	• Open or short in mass air flow meter circuit • Mass air flow meter • ECM	○	○
P0101 (DI–32)	Mass or Volume Air Flow Circuit Range/Performance Problem	• Mass air flow meter	○	○
P0110 (DI–33)	Intake Air Temperature Circuit	• Open or short in intake air temp. sensor circuit • Intake air temp. sensor (built into mass air flow meter) • ECM	○	○
P0115 (DI–38)	Engine Coolant Temperature Circuit	• Open or short in engine coolant temp. sensor circuit • Engine coolant temp. sensor • ECM	○	○
P0116 (DI–42)	Engine Coolant Temperature Circuit Range/Performance Problem	• Cooling system • Engine coolant temp. sensor	○	○
P0120 (DI–44)	Throttle Pedal Position Sensor/ Switch ”A” Circuit	• Open or short in throttle position sensor circuit • Throttle position sensor • ECM	○	○
P0121 (DI–48)	Throttle Pedal Position Sensor/ Switch ”A” Circuit Range/Performance Problem	• Throttle position sensor	○	○
P0125 (DI–42)	Insufficient Coolant Temperature for Closed Loop Fuel Control	• Same as DTC No. P0116	○	○
P0128 (DI–49)	Coolant Thermostat (Coolant Temperature Below Thermostat Regulating Temperature)	• Thermostat • Cooling system • Engine coolant temp. sensor • ECM	¿	¿
P0134 *4 (DI–50)	Oxygen Sensor Circuit No Activity Detected (Bank 1 Sensor 1)	• Open or short in A/F sensor (bank 1 sensor 1) circuit • A/F sensor (bank 1 sensor 1) • A/F sensor heater • EFI main relay • A/F sensor heater and relay circuit • Air induction system • Fuel pressure • Injector • Gas leak in exhaust system • PCV hose connection • PCV valve and hose • ECM	○	○

P0135 (DI–61)	Oxygen Sensor Heater Circuit (Bank 1 Sensor 1)	• Open or in heater circuit of A/F sensor • A/F sensor heater • ECM	○	○
P0136 (DI–64)	Oxygen Sensor Circuit Malfunction (Bank 1 Sensor 2)	• Open or short in heated oxygen sensor circuit • Heated oxygen sensor	○	○
P0171 (DI–68)	System too Lean (Bank 1)	• Air induction system • Injector blockage • Mass air flow meter • Engine coolant temp. sensor • Fuel pressure • Gas leakage in exhaust system • Open or short in A/F sensor (bank 1 sensor 1) circuit • A/F sensor (bank 1 sensor 1) • PCV valve and hose • PCV hose connection • EFI main relay • A/F sensor heater and relay circuit	○	○
P0172 (DI–68)	System too Rich (Bank 1)	• Injector leak or blockage • Mass air flow meter • Engine coolant temp. sensor • Ignition system • Fuel pressure • Gas leakage in exhaust system • Open or short in A/F sensor (bank 1 sensor 1) circuit • A/F sensor (bank 1 sensor 1) • EFI main relay • A/F sensor heater and relay circuit	○	○
P0300 (DI–77)	Random/Multiple Cylinder Misfire Detected	• Open or short in engine wire • Connector connection • Vacuum hose connection • Ignition system • Injector • Fuel pressure • EGR system (Only for 3RZ–FE) • Mass air flow meter • Engine coolant temp. sensor • Compression pressure • Valve clearance • Valve timing • PCV hose connection • PCV hose • ECM	○*2	○
P0301 (DI–77)	Cylinder 1 Misfire Detected			
P0302 (DI–77)	Cylinder 2 Misfire Detected			
P0303 (DI–77)	Cylinder 3 Misfire Detected			
P0304 (DI–77)	Cylinder 4 Misfire Detected			
P0325 (DI–87)	Knock Sensor 1 Circuit (Bank 1 or Single Sensor)	• Open or short in knock sensor circuit • Knock sensor (looseness) • ECM	○	○
P0335 (DI–90)	Crankshaft Position Sensor ”A” Circuit	• Open or short in crankshaft position sensor circuit • Crankshaft position sensor • Signal plate (Crankshaft position sensor rotor) • ECM	○	○
P0339 (DI–90)	Crankshaft Position Sensor ”A” Circuit Intermittent		–	○
P0340 (DI–93)	Camshaft Position Sensor ”A” Circuit (Bank 1 or Single Sensor)	• Open or short in camshaft position sensor circuit • Camshaft position sensor • Camshaft • Jumping teeth of timing chain • ECM	○	○
P0341 (DI–93)	Camshaft Position Sensor ”A” Circuit Range/Performance (Bank 1 or Single Sensor)		○	○

P0351 (DI–95)	Ignition Coil "A" Primary/Secondary Circuit	• Ignition system • Open or short in IGF and IGT1 circuit from ignition coil with igniter • ignition coil with igniter • ECM	○	○
P0352 (DI–95)	Ignition Coil "B" Primary/Secondary Circuit	• Ignition system • Open or short in IGF and IGT 2 circuit from No. 2 ignition coil with igniter to ECM • NO. 2 ignition coil with igniter • ECM	○	○
P0353 (DI–95)	Ignition Coil "C" Primary/Secondary Circuit	• Ignition system • Open or short in IGF and IGT 3 circuit from No. 3 ignition coil with igniter to ECM • NO. 3 ignition coil with igniter • ECM	○	○
P0354 (DI–95)	Ignition Coil "D" Primary/Secondary Circuit	• Ignition system • Open or short in IGF and IGT 4 circuit from No. 4 ignition coil with igniter to ECM • NO. 4 ignition coil with igniter • ECM	○	○
P0401 (DI–101)	Exhaust Gas Recirculation Flow Insufficient Detected (Only for 3RZ–FE)	• Open in EGR gas temp. sensor circuit • EGR gas temp. sensor • Vacuum or EGR hose disconnected • Open or short in VSV circuit for EGR • VSV for EGR • EGR system • EGR vacuum modulator • EGR valve stuck closed • ECM	○	○
P0402 (DI–111)	Exhaust Gas Recirculation Flow Excessive Detected (Only for 3RZ–FE)	• Short in EGR gas temp. sensor circuit • EGR gas temp. sensor • Open in VSV circuit for EGR • VSV for EGR • EGR valve stuck open • ECM	○	○
P0420 (DI–115)	Catalyst System Efficiency Below Threshold (Bank 1)	• Gas leakage on exhaust system • A/F sensor (bank 1 sensor 1) • Heated oxygen sensor (bank 1 sensor 2) • Three–way catalytic converter	○	○
P0441 (DI–118)	Evaporative Emission Control System Incorrect Purge Flow	• Fuel tank cap incorrectly installed • Fuel tank cap cracked or damaged • Vacuum hose cracks, holed blocked, damaged or disconnected • Open or short in vapor pressure sensor circuit • Vapor pressure sensor • Open or short in VSV circuit for EVAP • VSV for EVAP • Open or short in VSV circuit for CCV • VSV for CCV • Open or short in VSV circuit for pressure switching valve • VSV for pressure switching valve • Fuel tank cracked, holed or damaged • Charcoal canister cracked, holed or damaged • Fuel tank over fill check valve cracked or damaged • ECM	○	○

P0442 (DI–151)	Evaporative Emission Control System Leak detected (Small Leak)	• Fuel tank cap incorrectly installed • Fuel tank cap cracked or damaged • Hose or tube cracked, hole, damaged or loose seal • Vacuum hose cracked, holed, blocked, damaged or disconnected • Fuel tank cracked, holed or damaged • Charcoal canister cracked, holed or damaged • Open or short in vapor pressure sensor circuit • VSV for CCV • VSV for EVAP • VSV for pressure switching valve • Vapor pressure sensor • Fuel tank over fill check valve cracked or damaged • ECM	○	○
P0446 (DI–118)	Evaporative Emission Control System Vent Control Circuit	• Same as DTC No. P0441	○	○
P0450 (DI–165)	Evaporative Emission Control System Pressure Sensor Malfunction	• Open or short in vapor pressure sensor circuit • Vapor pressure sensor • ECM	○	○
P0451 (DI–165)	Evaporative Emission Control System Pressure Sensor Range/ Performance			
P0456 (DI–151)	Evaporative Emission Control System Leak detected (very small leak)	• Same as DTC No. P0442	○	○
P0500 (DI–167)	Vehicle Speed Sensor ”A”	• Combination meter • Open or short in No. 1 vehicle speed sensor circuit • ECM • No. 1 vehicle speed sensor	○	○
P0505 (DI–169)	Idle Air Control System	• PCV hose connection • PCV hose • Open or short in IAC valve circuit • IAC valve is stuck or closed • Open or short in A/C switch circuit • Air induction system • ECM	○	○
P0511 (DI–169)	Idle Air Control Circuit		○	○
P0560 (DI–173)	System Voltage	• Open in back up power source circuit • ECM	○	○
P0617 (DI–175)	Starter Relay Circuit High	• Short in Park/neutral position (PNP) switch (A/T) or Clutch start switch (M/T) circuit • Park/neutral position (PNP) switch (A/T) • Clutch start switch (M/T) • Ignition switch • ECM	○	○
P0705 *3 (DI–181)	Transmission Range Sensor Circuit Malfunction (PRNDL Input)	• Open in park/neutral position switch circuit • Park/neutral position switch • ECM	○	○
P0724 *3 (DI–182)	Brake Switch ”B” Circuit High	• Short in stop light switch signal circuit • Stop light switch • ECM	○	○
P0850 *3 (DI–181)	Park/Neutral Switch Input Circuit Low	• Open in park/neutral position switch circuit • Park/neutral position switch • ECM	○	○

P2195 *4 (DI–185)	Oxygen Sensor Signal Stuck Lean (Bank 1 Sensor 1)	• Open or short in A/F sensor circuit • A/F sensor • A/F sensor heater • EFI main relay • Air induction system • Fuel pressure • Injector • ECM	○	○
P2196 *4 (DI–185)	Oxygen (Sensor Signal Stuck Rich (Bank 1 Sensor 1)		○	○
P2237 *4 (DI–194)	Oxygen Sensor Pumping Current Circuit / Open (for A/F sensor) (Bank 1 Sensor 1)	• Open or short in A/F sensor circuit • A/F sensor • A/F sensor heater • EFI main relay	○	○
P2A00 (DI–198)	A/F Sensor Circuit Slow Response (Bank 1 Sensor 1)	• Open or short in A/F sensor circuit • A/F sensor • A/F sensor heater • EFI main relay • Air induction system • Fuel pressure • Injector • ECM	○	○

*1: – .... MIL does not light up. ○ .... MIL lights up
*2: MIL lights up or blinks.
*3: A/T only.
*4: This DTC is related to A/F sensor is in a malfunction, although the detection item is oxygen sensor.

ENGINE (2RZ–FE, 3RZ–FE)

DI129–10

HOW TO PROCEED WITH TROUBLESHOOTING

Troubleshoot in accordance with the procedure on the following page.

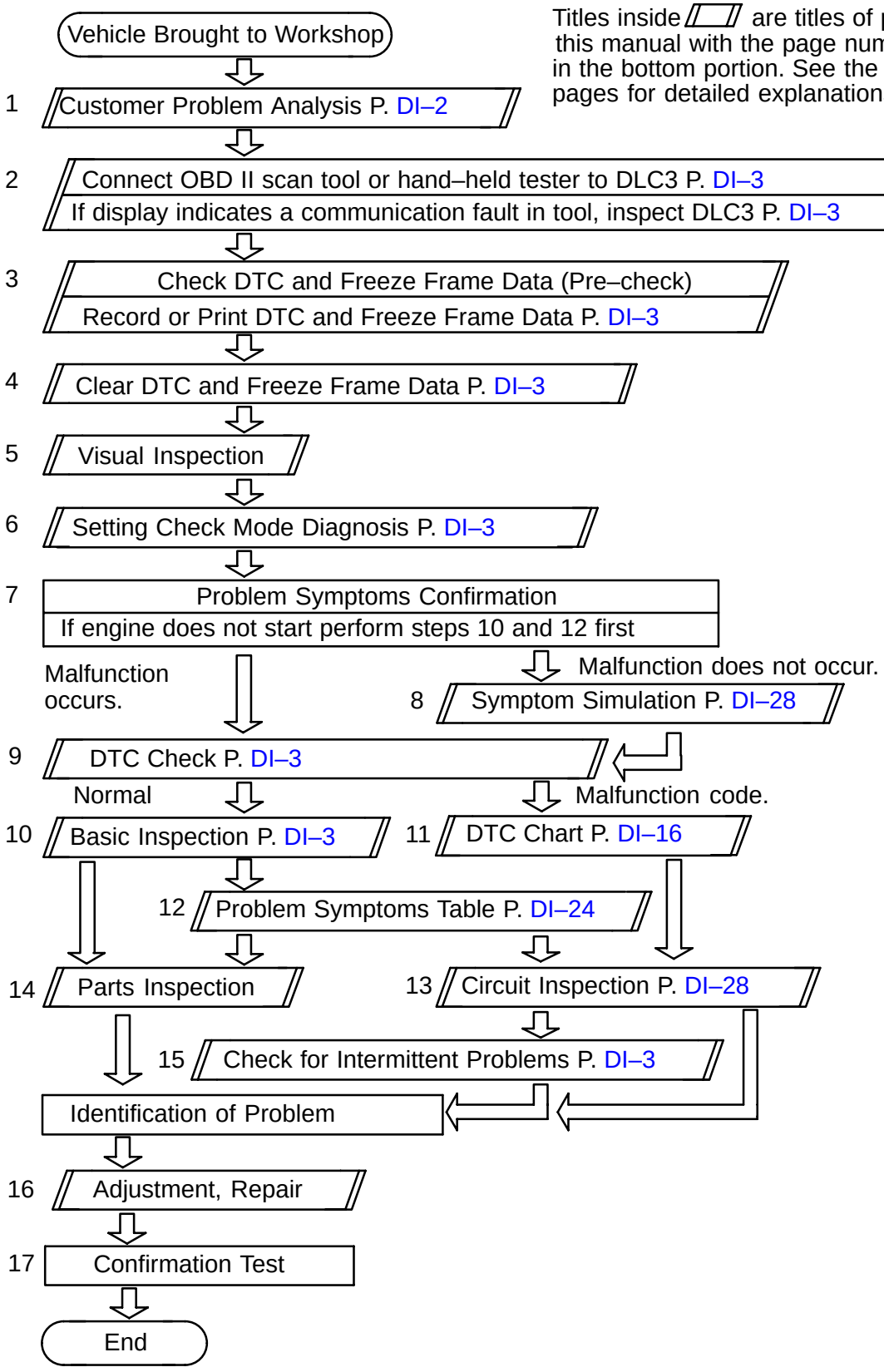

Titles inside ▱ are titles of pages in this manual with the page number indicated in the bottom portion. See the indicated pages for detailed explanations.

DI12D–13

PARTS LOCATION

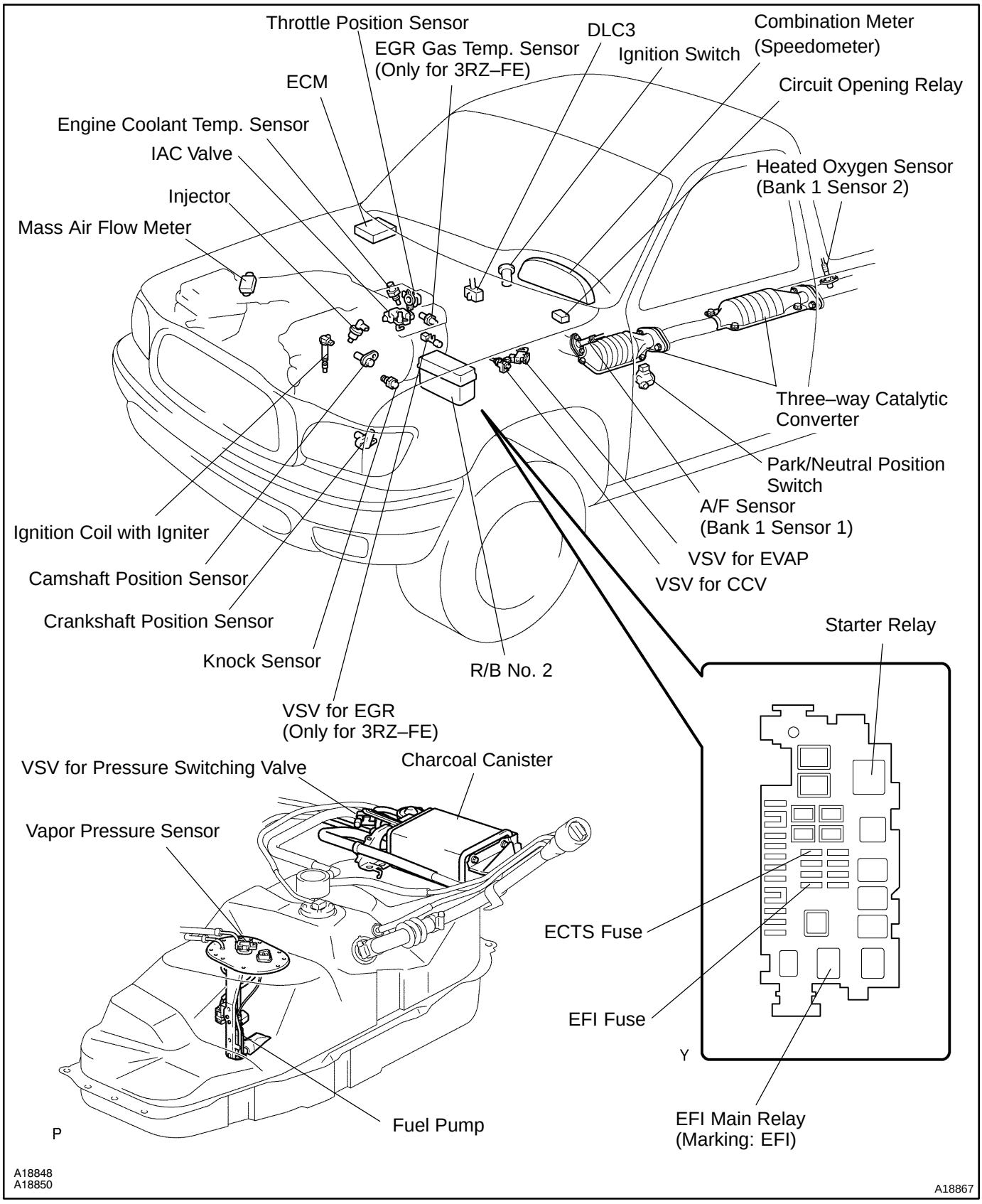

DI12B–15

PRE–CHECK

1. DIAGNOSIS SYSTEM

(a) Description

- When troubleshooting OBD II vehicles, the only difference from the usual troubleshooting procedure is that you need to connect the vehicle to the OBD II scan tool complying with SAE J1978 or hand–held tester, and read off various data output from the vehicle's ECM.

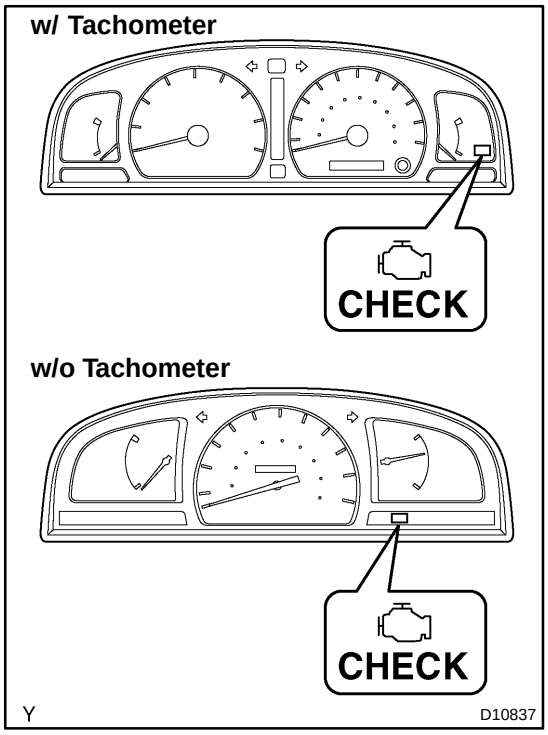

- OBD II regulations require that the vehicle's on–board computer lights up the Malfunction Indicator Light (MIL) on the instrument panel when the computer detects a malfunction in the emission control system/components or in the powertrain control components which affect vehicle emissions, or a malfunction in the computer. In addition to the MIL lighting up when a malfunction is detected, the applicable Diagnostic Trouble Codes (DTCs) prescribed by SAE J2012 are recorded in the ECM memory (See page DI–16).

If the malfunction does not reoccur in 3 consecutive trips, the MIL goes off automatically but the DTCs remain recorded in the ECM memory.

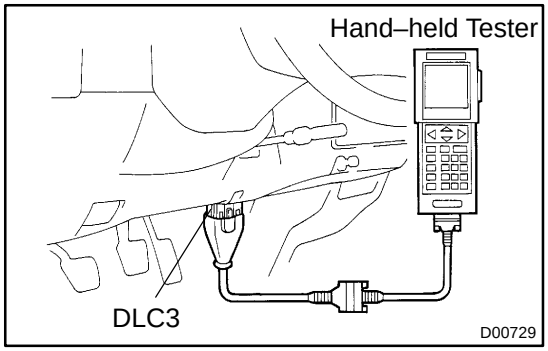

- To check the DTCs, connect the OBD II scan tool or hand–held tester to the Data Link Connector 3 (DLC3) on the vehicle. The OBD II scan tool or hand–held tester also enables you to erase the DTCs and check the freeze frame data and various forms of engine data (for operating instructions, see the OBD II scan tool's instruction book.). The DTCs include SAE controlled codes and manufacturer controlled codes. SAE controlled codes must be set as prescribed by the SAE, while manufacturer controlled codes can be set freely by a manufacturer within the prescribed limits (See DTC chart on page DI–16).

- The diagnosis system operates in the normal mode during normal vehicle use. It also has a check mode for technicians to simulate malfunction symptoms and troubleshoot. Most DTCs use 2 trip detection logic* to prevent an erroneous detection and ensure a thorugh malfunction detections. By switching the ECM to the check mode when troubleshooting, a technician can cause the MIL to light up for a malfunction that is only detected once or momentarily (hand–held tester only) (See step 3).
- *2 trip detection logic:
  When a malfunction is first detected, the malfunction is temporarily stored in the ECM memory (1st trip). If the same malfunction is detected again during the second drive test, this second detection causes the MIL to light up. (2nd trip) (however, the ignition switch must be turned OFF between the 1st trip and 2nd trip.)
- Freeze frame data:
  The freeze frame data records the engine conditions (fuel system, calculated load, engine coolant temperature, fuel trim, engine speed, vehicle speed, etc.) when the malfunction is detected. When troubleshooting, it is useful for determining whether the vehicle was running or stopped, the engine was warmed up or not, the air–fuel ratio was lean or rich, etc. at the time of the malfunction.

Priorities for troubleshooting:
If troubleshooting priorities for multiple DTCs are given in the applicable DTC chart, these should be followed.
If no instructions are given, troubleshoot DTCs according to the following priorities.

(1) DTCs other than fuel trim malfunction (DTCs P0171 and P0172), EGR (DTCs P0401 and P0402), and misfire (DTCs P0300 – P0304).
(2) Fuel trim malfunction (DTCs P0171 and P0172), and EGR (DTCs P0401 and P0402).
(3) Misfire (DTCs P0300 – P0304).

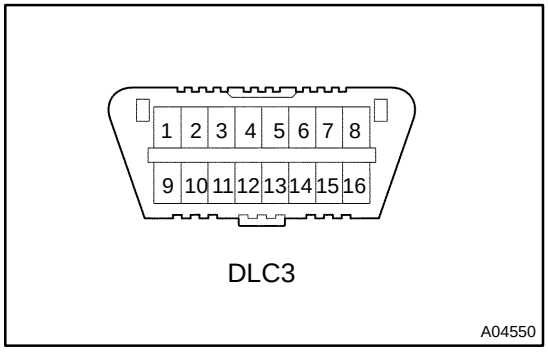

DLC3

(b) Check the DLC3.
The vehicle's ECM uses the ISO 9141–2 communication protocol. The terminal arrangement of the DLC3 complies with SAE J1962 and matches the ISO 9141–2 format.

Terminal No.	Connection/Voltage or Resistance	Condition
7	Bus (+) Line/Pulse generation	During transmission
4	Chassis Ground – Body Ground/1 Ω or less	Always
5	Signal Ground – Body Ground/1 Ω or less	Always
16	Battery Positive – Body Ground/9 – 14 V	Always

HINT:

If your display shows UNABLE TO CONNECT TO VEHICLE when you have connected the cable of the OBD II scan tool or hand–held tester to the DLC3, turned the ignition switch ON and operated the scan tool, there is a problem on the vehicle side or tool side.

- If the communication is normal when the tool is connected to another vehicle, inspect the DLC3 of the original vehicle.
- If the communication is still not possible when the tool is connected to another vehicle, the problem is probably in the tool itself, so consult the Service Department listed in the tool's instruction manual.

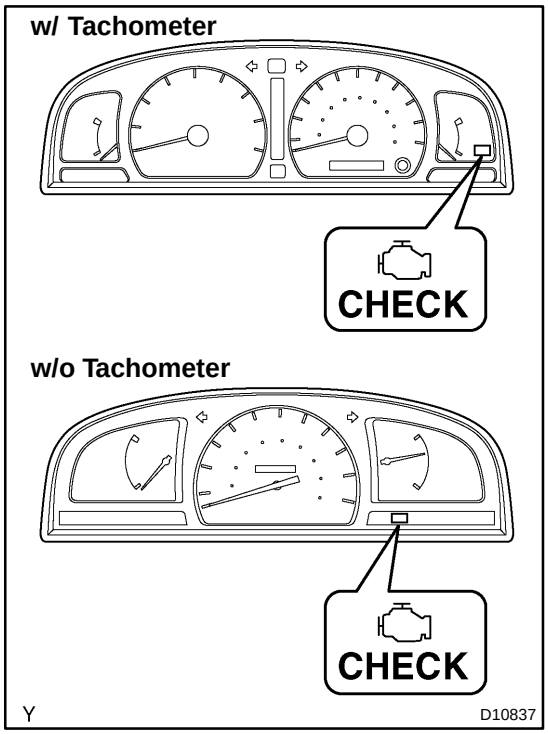

2. Normal Mode:
INSPECT DIAGNOSIS

(a) Check the MIL.

(1) The MIL comes on when the ignition switch is turned ON and the engine is not running.

HINT:

If the MIL does not light up, troubleshoot the combination meter (See page BE–2).

(2) When the engine started, the MIL should go off. If the light remains on, the diagnosis system has detected a malfunction or abnormality in the system.

(b) Check the DTC.

NOTICE:

- **If there is no DTC in the normal mode, check the 1st trip DTC using the Continuous Test Results function (Mode 7 for SAE J1979) on the OBD II scan tool or hand–held tester.**

- **Hand–held tester only:**
  When the diagnosis system is switched from the normal mode to the check mode, all the DTCs and freeze frame data recorded in the normal mode will be erased. So before switching modes, always check the DTCs and freeze frame data, and note them down.

(1) Prepare the OBD II scan tool (complying with SAE J1978) or hand–held tester.

(2) Connect the OBD II scan tool or hand–held tester to the DLC3 at the lower left of the instrument panel.

(3) Turn the ignition switch ON and turn the OBD II scan tool or hand–held tester switch ON.

(4) Use the OBD II scan tool or hand–held tester to check the DTCs and freeze frame data and note them down (for operating instructions, see the OBD II scan tool's instruction book.).

If there is no DTC in the normal mode, check the 1st trip DTC using Continuous Test Results function (Mode 7 for SAE J1979) on the OBD II scan tool or hand–held tester.

(5) See step 4. to confirm the details of the DTCs.

NOTICE:

- **When simulating a symptom with the OBD II scan tool (excluding hand–held tester) to check the DTCs, use the normal mode. For code on the DTC chart subject to "2 trip detection logic", perform either of the following actions.**
- **Turn the ignition switch OFF after the symptom is simulated the first time. Then repeat the simulation process again. When the problem has been simulated twice, the MIL lights up and the DTCs are recorded in the ECM.**
- **Check the 1st trip DTC using Mode 7 (Continuous Test Results) for SAE J1979.**

(c) Clear the DTC.

The DTCs and freeze frame data will be erased by either action.

- Operating the OBD ll scan tool (complying with SAE J1978) or hand–held tester to erase the codes (See the OBD ll scan tool's instruction book for operating instructions.).
- Disconnecting the battery terminals or remove the EFI fuse more than 60 seconds.

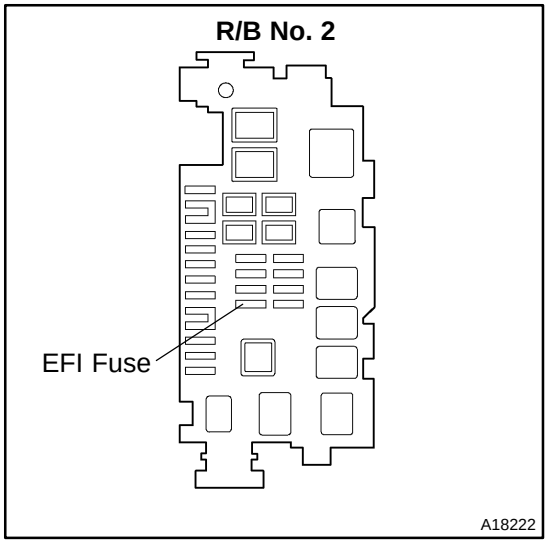

NOTICE:

If the hand–held tester switches the ECM from the normal mode to the check mode or vice–versa, or if the ignition switch is turned from ON to ACC or OFF during the check mode, the DTCs and freeze frame data will be erased.

3. Check Mode:

INSPECT DIAGNOSIS

HINT:

Hand–held tester only:

Compared to the normal mode, the check mode has furthur sensitivity to detect malfunctions.

Furthermore, the same diagnostic items which are detected in the normal mode can also be detected in the check mode.

Check the DTC.

(1) Initial conditions

- Battery positive voltage 11 V or more
- Throttle valve fully closed
- Transmission in the P or N position

- A/C switched OFF

(2) Turn the ignition switch OFF.
(3) Prepare the hand–held tester.
(4) Connect the hand–held tester to the DLC3 in the at the lower left of the instrument panel.
(5) Turn the ignition switch ON and push the hand–held tester ON.

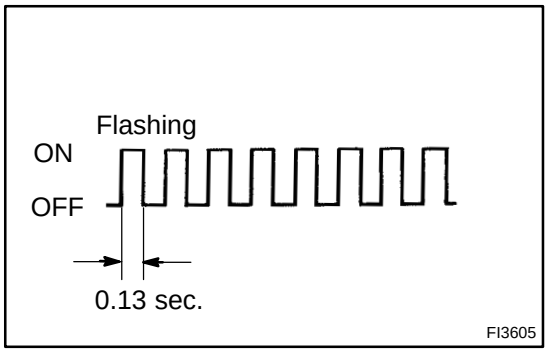

(6) Switch the hand–held tester from the normal mode to the check mode (check that the MIL flashes).

NOTICE:

If the hand–held tester switches the ECM from the normal mode to the check mode or vice–versa, or if the ignition switch is turned from ON to ACC or OFF during the check mode, the DTCs and freeze frame data will be erased.

(7) Start the engine (the MIL goes off after the engine starts).
(8) Simulate the conditions of the malfunction described by the customer.

NOTICE:

Leave the ignition switch ON until you have checked the DTCs, etc.

(9) After simulating the malfunction conditions, use the hand–held tester diagnosis selector to check the DTCs and freeze frame data, etc.

HINT:

Be careful not to turn the ignition switch OFF. Turning the ignition switch OFF switches the diagnosis system from the check mode to the normal mode, so all the DTCs, etc. are erased.

(10) After checking the DTC, inspect the applicable circuit.

4. FAIL–SAFE CHART

If any of the following codes is recorded, the ECM enters fail–safe mode.

DTC No.	Fail–Safe Operation	Fail–Safe Deactivation Conditions
P0100	• Ignition timing is calcurated from engine speed and throttle opening angle. • Injection time fixed Starting – – – – – – – –11.6 msec. CTP switch ON – – – – 3.2 msec. CTP switch OFF – – – – 6.0 msec.	Returned to normal condition
P0110	Intake air temperature fixed at 20˚C (68˚F)	Returned to normal condition
P0115	Engine coolant temperature fixed at 80˚C (176˚F)	Returned to normal condition
P0120	VTA fixed at 0 %	The following condition must be repeated at least 2 times consecutively When closed throttle position switch is ON: VTA ≧ 0.1 V and ≦ 0.95 V
P0036	The heater circuit in which an abnormality is detected is turned off	Ignition switch OFF
P0325	Max. timing retardation	Ignition switch OFF
P0340	Fuel cut	Returned to normal condition
P0351 P0352 P0353 P0354	Fuel cut	Returned to normal condition

5. CHECK FOR INTERMITTENT PROBLEMS

HINT:

Hand–held tester only:

By putting the vehicle's ECM in the check mode, 1 trip detection logic is possible instead of 2 trip detection logic and sensitivity to detect open circuits is increased. This makes it easier to detect intermittent problems.

(a) Clear the DTCs (See step 2).
(b) Set the check mode (See step 3).
(c) Perform a simulation test (See page IN–18).
(d) Check the connector and terminal (See page IN–28).
(e) Handle the connector (See page IN–28).

6. BASIC INSPECTION

When the malfunction code is not confirmed in the DTC check, troubleshooting should be performed in all the possible circuits considered as a cause of the problems. In many cases, by carrying out the basic engine check shown in the following flow chart, the location causing the problem can be found quickly and efficiently. Therefore, use this check is essential to the engine troubleshooting.

1	**Is battery positive voltage 11 V or more when engine is stopped?**

NO → **Charge or replace battery.**

YES

2	**Is engine cranked?**

NO	**Proceed to pages ST–16, ST–18, and continue to troubleshoot.**

YES

3	**Does engine start?**

NO	**Go to step 7.**

YES

4	**Check air filter.**

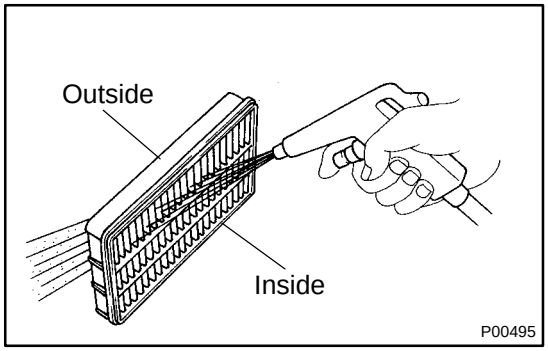

PREPARATION:
Remove the air filter.
CHECK:
Visually check that the air filter is not dirty nor excessive only.
HINT:
If necessary, clean the air filter with compressed air. First blow from inside thoroughly, then blow from outside of the air filter.

NG	**Repair or replace.**

OK

5	**Check idle speed.**

PREPARATION:
(a) Warm up the engine to the normal operating temperature.
(b) Switch off all the accessories.
(c) Switch off the A/C.
(d) Shift the transmission into the N position.
(e) Connect the OBD II scan tool or hand–held tester to the DLC3 of the vehicle.

CHECK:
Use the ”DIAGNOSIS/ENHANCED OBD II/DATA LIST/ALL” to check the idle speed.

OK:
Idle speed: 650 – 750 rpm

NG → **Proceed to problem symptoms table on page DI–24.**

OK

6	**Check ignition timing (See page EM–10).**

NG → **Proceed to page IG–1, and continue to troubleshoot.**

OK

Proceed to problem symptoms table on page DI–24.

7	**Check fuel pressure.**

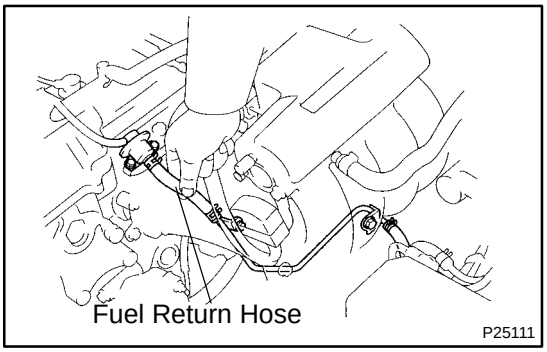

PREPARATION:

(a) Be sure that the enough fuel is in the tank.
(b) Connect the hand–held tester to the DLC3.
(c) Turn the ignition switch ON and push the TOYOTA hand–held tester main switch ON.
(d) Use the ACTIVE TEST mode to operate the fuel pump.
(e) Please refer to the hand–held tester operator's manual for further details.
(f) If you have no hand–held tester, connect the positive (+) and negative (–) leads from the battery to the fuel pump connector (See page SF–5).

CHECK:

Check for the fuel pressure in the fuel return hose when it is pinched by hand.
HINT:
At this time, you will hear the fuel flowing noise.

NG → **Proceed to page SF–5, and continue to troubleshoot.**

OK

8	Check for spark.

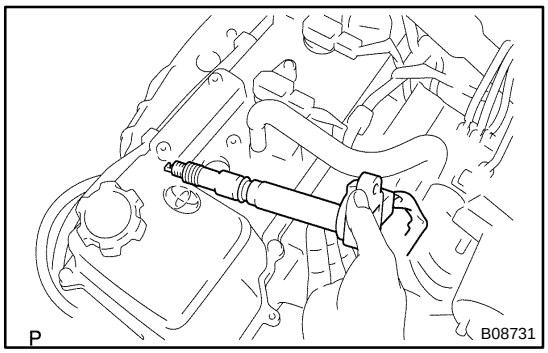

PREPARATION:

(a) Remove the ignition coil.
(b) Remove the spark plug.
(c) Install the spark plug to the ignition coil, and connect the ignition coil connector.
(d) Disconnect the injector connector.
(e) Ground the spark plug.

CHECK:

Check if spark occurs while the engine is being cranked.

NOTICE:

To prevent excess fuel from being injected from the injectors during this test, don't crank the engine for more than 5 – 10 seconds at a time.

NG → **Proceed to page IG–1, and continue to troubleshoot.**

OK

Proceed to problem symptoms table on page DI–24.

7. DATA LIST

HINT:

According to the DATA LIST displayed by the OBD II scan tool or hand–held tester, you can read the value of the switch, sensor, actuator and so on without parts removal. Reading the DATA LIST as a first step of troubleshooting is one of the method to shorten the labor time.

NOTICE:

The values given below for "Normal Condition" are representative values. So a vehicle may still be normal even if its value differs from those listed here. So, do not depend solely on the "Normal Condition" here when deciding whether a part is faulty or not.

(a) Warm up the engine.
(b) Turn the ignition switch OFF.
(c) Connect the OBD II scan tool or the Hand–held tester to the DLC3.
(d) Turn the ignition switch ON.
(e) According to the display on tester, read the "DATA LIST".

Hand–held tester display	Measurement Item	Normal Condition *	Diagnostic Note
INJECTOR	Injection period of the No. 1 cylinder/Min.: 0 ms, Max.: 32.64 ms	Idling: 2RZ–FE: 2.3 – 3.6 ms 3RZ–FE: 2.3 – 3.8 ms	
IGN ADVANCE	Ignition advance of ignition timing of No. 1 cylinder/Min.: –64 deg., Max.: 63.5 deg.	Idling: 2RZ–FE: BTDC 5 – 17˚ 3RZ–FE: BTDC 4 – 17˚	
IAC DUTY RATIO	Duty ratio of the ISC valve/ Min.: 0 %, Max.: 99 %	Idling: 23 – 48 %	
CALC LOAD	Calculator load by ECM/ Min.: 0 %, Max.: 100 %	• Idling: 2RZ–FE: 12 – 22 % 3RZ–FE: 11 – 21 % • Racing without load (2,500 rpm): 2RZ–FE: 14 – 24 % 3RZ–FE: 12 – 22 %	
MAF	Air flow rate from MAF sensor/ Min.: 0 gm/s, Max.: 655 gm/s	• Idling: 2RZ–FE: 2.0 – 3.7 gm/sec. 3RZ–FE: 2.0 – 3.9 gm/sec. • Racing without load (2,500 rpm): 2RZ–FE: 8.3 – 14.3 gm/sec. 3RZ–FE: 8.0 – 14.7 gm/sec.	
ENGINE SPD	Engine speed/ Min.: 0 rpm, Max.: 16383 rpm	Idling: 650 – 750 rpm	
COOLANT TEMP	Coolant temperature/ Min.: –40 °C, Max.: 140 °C	After warming up: 80 – 95˚C (176 – 203˚F)	If the value is "–40˚C" or "140˚C", sensor circuit is open or shorted.
INTAKE AIR	Intake air temperature/ Min.: –40 °C, Max.: 140 °C	Equivalent to ambient temperature	
THROTTLE POS	Absolute throttle position sensor/ Min.: 0 %, Max.: 100 %	• Throttle fully closed: 7 – 11 % • Throttle fully open: 65 – 75 %	
CTP SW	Closed throttle position switch/ ON or OFF	• Trottle fully closed: ON • Trottle open: OFF	
VEHICLE SPD	Vehicle Speed/ Min.: 0 km/h, Max.: 255 km/h	Vehicle stopped: 0 km/h (0 mph)	
O2S B1 S2	Oxygen sensor output voltage of the bank 1 sensor 2/ Min.: 0 V, Max.: 1.275 V	Driving (50 km/h, 31 mph): 0.1 – 0.9 V	

A/FS B1 S1	A/F sensor output voltage of the bank 1 sensor 1/ Min.: 0 V, Max.: 7.999 V	Idling: 2.8 – 3.8 V	
EGRT GAS (3RZ–FE)	EGR Gas Temperature/ Min.: 0 °C, Max.: 159.4 °C	Fuel tank cap removed: 0 kPa	
VAPOR PRESS VSV	Vapor Pressure/ Min.: –4.125 kPa, Max.: 2.125 kPa	VSV operating: ON (TANK)	
SHORT FT #1	Short term fuel trim of bank 1/ Min.: –100 %, Max.: 100%	0 ± 20 %	
LONG FT #1	Long term fuel trim of bank 1/ Min.: –100 %, Max.: 100 %	0 ± 20 %	
TOTAL FT #1	Total fuel trim of bank 1/ Min.: 0.5, Max.: 1.496	Idling: 0.8 – 1.2 V	
O2FT B1S2	Short term fuel trim associated with the bank 1, sensor 2/Min.: –100 %, Max.: 100%	0 ± 20 %	
A/F FT B1 S1	Short term fuel trim associated with the bank 1, sensor 1/Min.: –100 %, Max.: 100%	0 ± 20 %	
FUEL SYS #1	Fuel system status (Bank1) / OL or CL or OLDRIVE or OLFAULT or CLFAULT	Idling after warming up: CL	• OL: Open Loop–has not yet satisfied conditions to go closed loop. • CL: Closed Loop–using oxygen sensor(s) as feed back for fuel control. • OL DRIVE: Open loop due to driving conditions. (power enrichment, deceleration eneanment) OL FAULT: Open loop due to detected system fault. • CL FAULT: Closed loop, but fault with at least one oxygen sensor may be using single oxygen sensor for fuel control.
FC IDL	Idle fuel cut / ON or OFF	Fuel cut operating: ON	
MIL	MIL status / ON or OFF	MIL ON: ON	
STARTER SIG	Starter signal / ON or OFF	Cranking: ON	
A/C SIG	A/C signal / ON or OFF	A/C ON: ON	
ELECT LOAD SIG	Electrical load signal/ ON or OFF	Defogger switch ON: ON	
STOP LIGHT SW	Stop light switch / ON or OFF	Stop light switch ON: ON	
PS OIL PRESS SW	Power steering signal / ON or OFF	Steering position is; center: OFF Except center:ON	
PS SIGNAL	Power steering signal/ ON or OFF	After engine start: OFF After steer the steering: ON	
A/C CUT SIG	A/C cut signal/ ON or OFF	A/C S/W OFF: ON	

EGR SYSTEM (*2)	EGR System status/ ON or OFF	When idling: OFF	
FUEL PUMP / SPD	Fuel pump / speed status / ON/H or OFF/M, L	Idling: ON	
EVAP VSV	VSV status for EVAP control / ON or OFF	Idling: Below 30 %	
IGNITION	Ignition counter/ Min.: 0, Max.: 400	0 – 400	
CYL#1, CYL#2, CYL#3, CYL#4	Misfire ratio of the cylinder 1 – 6/ Min.: 0 %, Max.: 50%	0 %	
FC TAU	Fuel Cut TAU: Fuel cut during very light load/ ON or OFF	Fuel cut operating: ON	

*: If no conditions are specifically stated for ”Idling”, it means the shift lever is at the N or P position, the A/C switch is OFF and all accessory switches are OFF.

8. ACTIVE TEST

HINT:

Performing the ACTIVE TEST using the OBD II scan tool or Hand–held tester allows the relay, VSV, actuator and so on to operate without parts removal. Performing the ACTIVE TEST as a first step of troubleshooting is one of the method to shorten the labor time.

It is possible to display the DATA LIST during the ACTIVE TEST.

(a) Warm up the engine.
(b) Turn the ignition switch OFF.
(c) Connect the OBD II scan tool or the Hand–held tester to the DLC3.
(d) Turn the ignition switch ON.
(e) According to the display on tester, read the ”ACTIVE TEST”.

Hand–held tester display	Test Detailse	Diagnostic Note
INJ VOL	[Test Details] Control the injection volume Min.: –12.5 %, Max.: 24.8 % [Vehicle Condition] Engine speed: 3000rpm or less.	
A/F CONTROL	[Test Details] Control the injection volume –12.5 ⇔ 25 % (Change the injection volume to –12.5 % or 25 %.) [Vehicle Condition] Engine speed: 3000 rpm or less.	The following procedure of A/F CONTROL enables that to check its output (show its graph indication) of A/F sensor and oxygen sensor. To display the graph indication, select O2S B1 S1 or A/F B1S1 and press button ”4” after selecting ”ACTIVE TEST/A/F CONTROL/USER DATA”.
IAC DUTY RATIO (w/o ETCS)	[Test Details] Control the IAC duty ratio Min.: 0 %, Max.: 90 % [Vehicle Condition] Engine speed: Idling Battery voltage: 8.5 V or more	
EGR SYSTEM (*1)	[Test Details] Activate the VSV for canister control. ON or OFF	
A/C CUT SIG	[Test Details] Control the A/C cut signal ON or OFF	
CAN CTRL VSV	[Test Details] Activate the VSV for canister control. ON or OFF	

TANK BYPASS VSV	[Test Details] Activate the VSV for tank bypass. ON or OFF	
EVAP VSV (ALONE)	[Test Details] Activate the VSV for EVAP control. ON or OFF	
FUEL PUMP / SPD	[Test Details] Control the fuel pump. ON or OFF	
TC/TE1	[Test Details] Connect the TC and TE1 ON or OFF	
FC IDL PROHBT	[Test Details] Control the idle fuel cut prohibit ON or OFF	

*1: Only for 3RZ–FE

DI12F–13

PROBLEM SYMPTOMS TABLE

Symptom	Suspect Area	See page
Engine does not crank (Does not start)	8. Starter 9. Starter relay	ST–16 ST–18
No initial combustion (Does not start)	1. ECM power source circuit 2. Fuel pump control circuit 3. ECM	DI–206 DI–210 IN–28
No complete combustion (Does not start)	1. Fuel pump control circuit	DI–210
Engine cranks normally (Difficult to start)	1. Starter signal circuit 2. Fuel pump control circuit 3. Compression	DI–175 DI–210 EM–3
Cold engine (Difficult to start)	1. Starter signal circuit 2. Fuel pump control circuit	DI–175 DI–210
Hot engine (Difficult to start)	1. Starter signal circuit 2. Fuel pump control circuit	DI–175 DI–210
High engine idle speed (Poor idling)	1. ECM power source circuit	DI–206
Low engine idle speed (Poor idling)	1. Fuel pump control circuit	DI–210
Rough idling (Poor idling)	1. Compression 2. Fuel pump control circuit	EM–3 DI–210
Hunting (Poor idling)	1. ECM power source circuit 2. Fuel pump control circuit	DI–206 DI–210
Hesitation/Poor acceleration (Poor driveability)	1. Fuel pump control circuit 2. A/T faulty	DI–210 DI–476
Surging (Poor driveability)	1. Fuel pump control circuit	DI–210
Soon after starting (Engine stall)	1. Fuel pump control circuit	DI–210
During A/C operation (Engine stall)	1. ECM	IN–28

DI8ZT–03

TERMINALS OF ECM

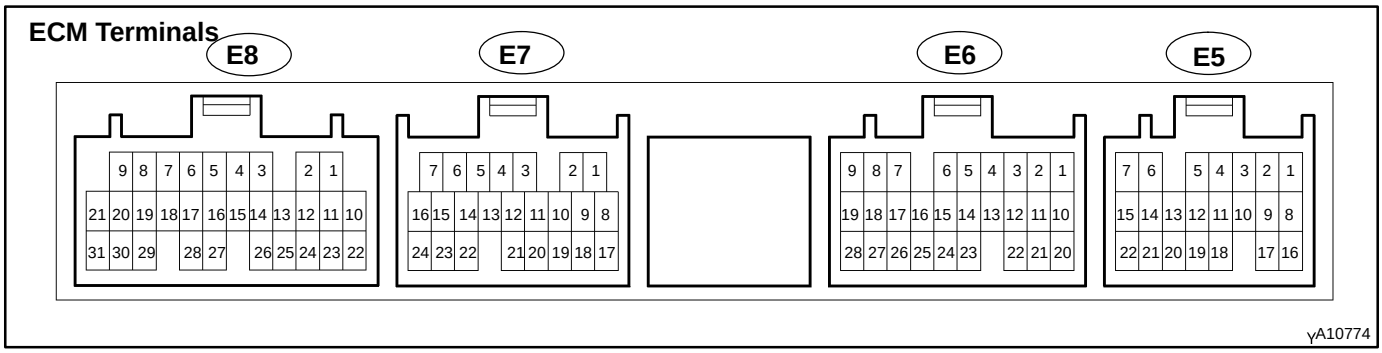

Symbols (Terminal No.)	Wiring Color	Condition	STD Voltage (V)
VG (E7–14) – EVG (E7–22)	GR – B–W	Idling A/C switch OFF, Shift position in N or P	1.1 – 1.5
THA (E7–21) – E2 (E7–18)	Y–G – L–B	Idling Intake air temp. 20˚C (68˚ F)	0.5 – 3.4
THW (E7–12) – E2 (E7–18)	G–R – L–B	Idling Engine coolant temp. 80˚C (176˚F)	0.2 – 1.0
VC (E7–2) – E2 (E7–18)	G–Y – L–B	IG switch ON	4.5 – 5.5
VTA (E7–9) – E2 (E7–18)	Y – L–B	IG switch ON Throttle valve fully closed	0.3 – 1.0
		IG switch ON Throttle valve fully open	3.2 – 4.9
AF+ (E7–11) – E1 (E7–17)	V – BR	Always (IG switch ON)	3.3 fixed *3
AF– (E7–20) – E1 (E7–17)	P – BR	Always (IG switch ON)	3.0 fixed *3
OXS (E7–10) – E1 (E7–17)	B – BR	Maintain engine speed at 2,500 rpm for 3 min. after warming up	Pulse generation (See page DI–64)
AFHT (E7–4) – E03 (E8–5)	W – W–B	Idling	Below 3.0
HTS (E7–3) – E03 (E8–5)	R–W – W–B	IG switch ON	9 – 14
#10 (E8–1) – E01 (E8–21)	W–R – W–B	IG switch ON	9 – 14
#20 (E8–2) – E01 (E8–21)	W – W–B	Idling	Pulse generation (See page DI–77)
#30 (E8–3) – E01 (E8–21)	R – W–B		
#40 (E8–4) – E01 (E8–21)	R–L – W–B		
KNK (E8–28) – E1 (E7–17)	B – BR	Idling	Pulse generation (See page DI–87)
G2+ (E7–15) – NE– (E7–24)	R – G	Idling	Pulse generation (See page DI–90)
NE+ (E7–16) – NE– (E7– 24)	L – G	Idling	Pulse generation (See page DI–90)
EGR (E7–5) –E01 (E8–21) *2	R–B – W–B	IG switch ON	0 – 3
THG (E7–19) – E2 (E7–18) *2	P–L – L–B	IG switch ON	4.5 – 5.5
PTNK (E6–8) – E2 (E7–18)	R–Y – L–B	IG switch ON Remove fuel tank cap	3.3
EVP (E7–6) – E01 (E8–21)	W–G – W–B	IG switch ON	9 – 14
CCV (E7–1) – E01 (E8–21)	R–L – W–B	IG switch ON	9 – 14
TBP (E7–7) – E01 (E8–21)	G–B – W–B	IG switch ON	9 – 14
SP1 (E5–21) – E1 (E7–17)	G–O – BR	IG switch ON Rotate driving wheel slowly	Pulse generation (See page DI–167)
RSD (E8–15) – E1 (E7–17)	B–R – BR	IG switch ON Disconnect E8 connector from ECM	Below 3.0
IGT1 (E8–11) – E1 (E7–17)	B–L – BR	Idling	Pulse generation (See page DI–95)
IGT2 (E8–12) – E1 (E7–17)	L – BR		
IGT3 (E8–13) – E1 (E7–17)	L–R – BR		
IGT4 (E8–14) – E1 (E7–17)	L–Y – BR		

IGF (E8–10) – E1 (E7–17)	B–Y – BR	IG switch ON	Disconnect ignition coil connector	4.5 – 5.5
		Idling		Pulse generation (See page DI–95)
STP (E5–15) – E1 (E7–17) *1	G–W – BR	IG switch ON	Brake pedal depressed	7.5 – 14
		IG switch ON	Brake pedal released	Below 1.5
BATT (E5–1) – E1 (E7–17)	B–Y – BR	Always		9 – 14
NSW (E5–22) – E1 (E7–17) *1	Y–GR – BR	IG switch ON	Shift position in P or N position	0 – 3.0
STA (E5–7) – E1 (E7–17)	G – BR	Cranking		6.0 or more
+B (E5–16) – E1 (E7–17)	W–R – BR	IG switch ON		9 – 14
FC (E6–6) – E01 (E8–21)	W–L – BR	IG switch ON		9 – 14
TC (E6–7) – E1 (E7–17)	Y–B – BR	IG switch ON		9 – 14
W (E5–6) – E1 (E7–17)	V–R – BR	Idling		9 – 14
		IG switch ON		Below 3.0
ELS (E5–20) – E1 (E7–17)	G–R – BR	Defogger switch and taillight switch OFF		Below 1.5
PSSW (E6–28) – E1 (E7–17)	Y – BR	IG switch ON		9 –14
		At idling	Turn steering wheel to lock position	Below 3.0
SIL (E5–12) – E1 (E7–17)	W – BR	During transmission		Pulse generation

*1: Only for A/T
*2: Only for 3RZ–FE
*3: The ECM terminal voltage is fixed regardless of the output voltage from the sensor.

DIB2C–01

ECM Power Source Circuit

CIRCUIT DESCRIPTION

When the ignition switch is turned on, battery positive voltage is applied to terminal IGSW of the ECM and the EFI main relay (Marking: EFI) control circuit in the ECM sends a signal to terminal MREL of the ECM switching on the EFI main relay.

This signal causes current to flow to the coil, closing the contacts of the EFI, main relay and supplying power to terminals +B of the ECM.

w/o ETCS:

If the ignition switch is turned off, the ECM continues to switch on the EFI main relay for a maximum of 2 seconds for the initial setting of the IAC valve.

WIRING DIAGRAM

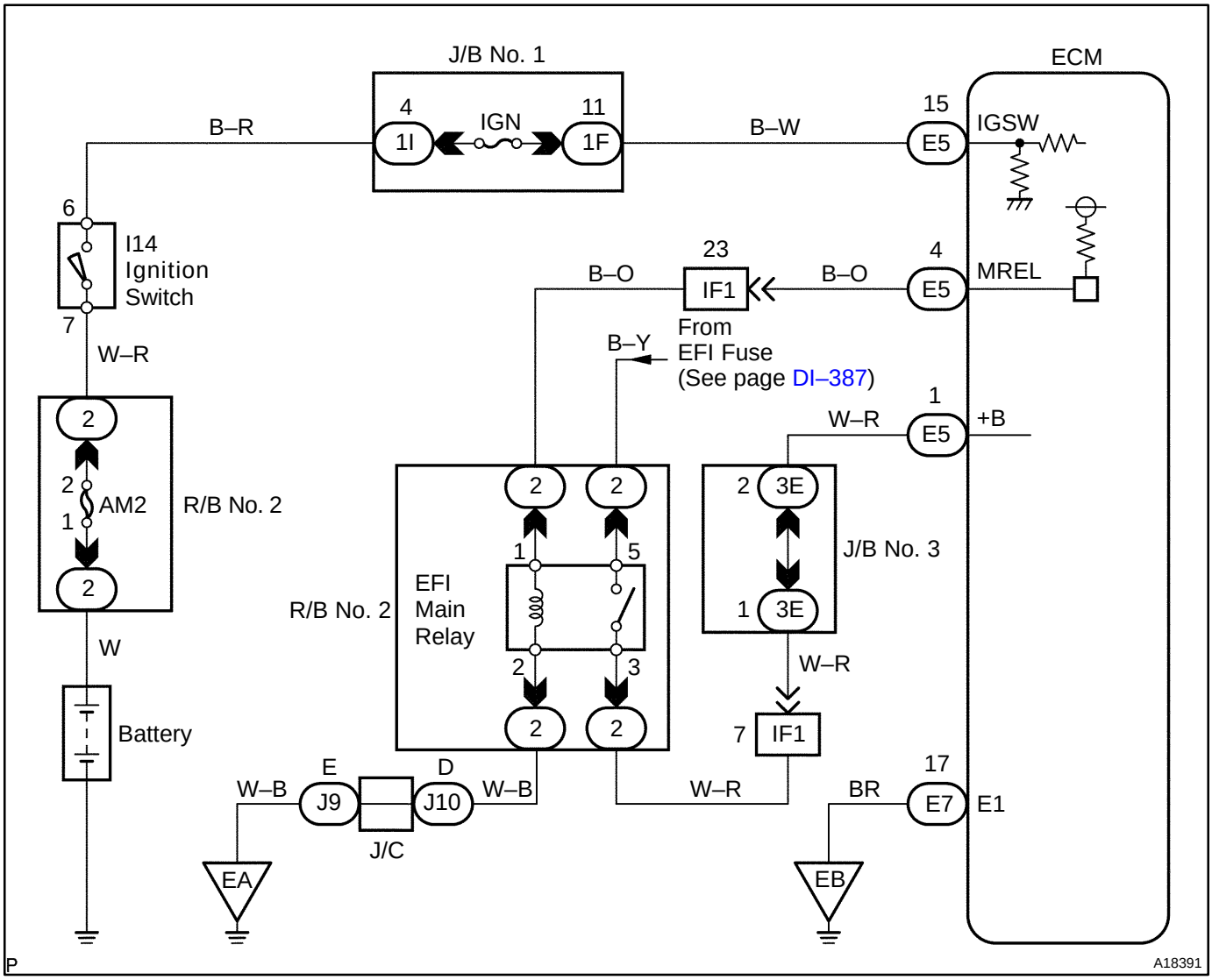

INSPECTION PROCEDURE

1	**Check voltage between terminals +B and E1 or ECM connectors.**

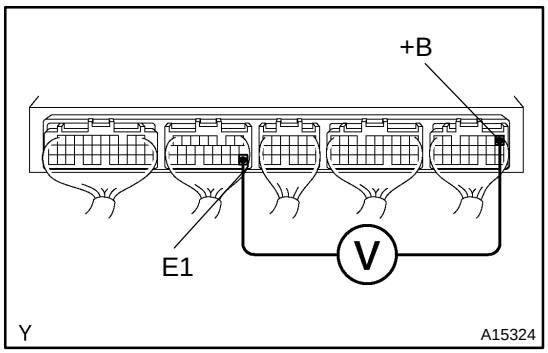

PREPARATION:

(a) Remove the glove compartment (See page SF–63).

(b) Turn the ignition switch ON.

CHECK:

Measure the voltage between terminals +B and E1 of the ECM connectors.

OK:

Voltage: 9 – 14 V

OK	**Proceed to next circuit inspection shown on problem symptoms table (See page DI–242).**

NG

2	**Check for open in harness and connector between terminal E1 of ECM connector and body ground (See page IN–28).**

NG	**Repair or replace harness or connector.**

OK

3	**Check voltage between terminal IGSW of ECM connector and body ground.**

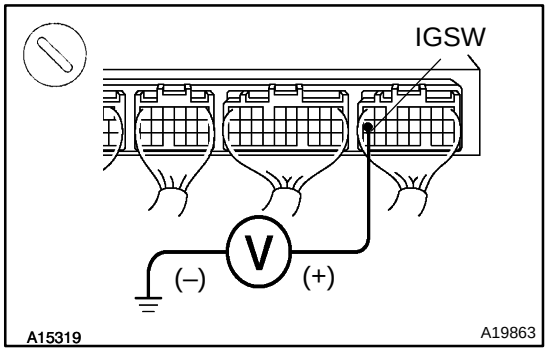

PREPARATION:

(a) Remove the glove compartment (See page SF–63).

(b) Turn the ignition switch ON.

CHECK:

Measure the voltage between terminal IGSW of the ECM connector and the body ground.

OK:

Voltage: 9 – 14 V

OK	**Go to step 6.**

NG

4	Check IGN fuse.

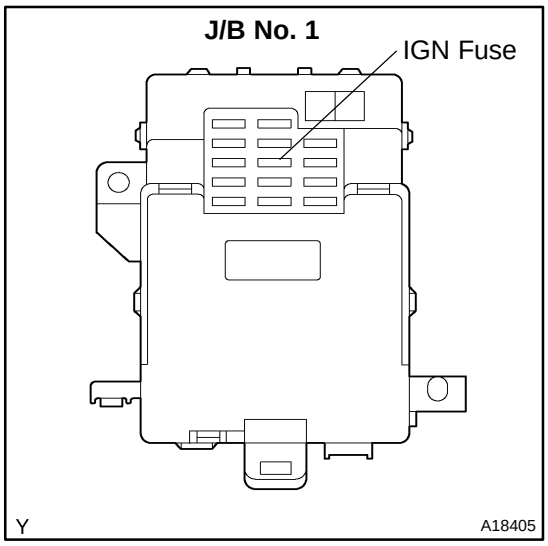

PREPARATION:
Remove the IGN fuse from the J/B No. 1.
CHECK:
Check the continuity of the IGN fuse.
OK:
Continuity

NG → **Check for short in all harness and components connected to IGN fuse (See attached wiring diagram).**

OK

5	Check ignition switch (See page BE–13).

NG → **Replace ignition switch.**

OK

Check and repair harness and connector between battery and ignition switch, and ignition switch and ECM (See page IN–28).

6	Check voltage between terminal MREL of ECM connector and body ground.

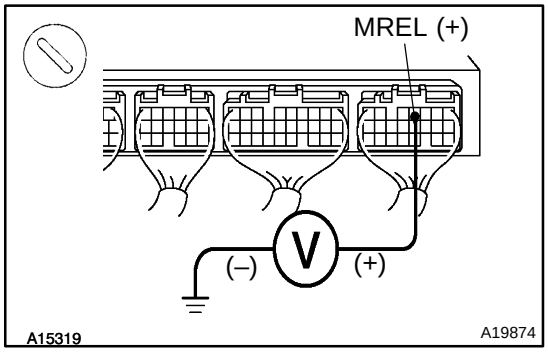

PREPARATION:
(a) Remove the glove compartment (See page SF–63).
(b) Turn the ignition switch ON.
CHECK:
Measure the voltage between terminal MREL of the ECM connector and the body ground.
OK:
Voltage: 9 – 14 V

NG → **Check and replace ECM (See page IN–28).**

OK

7	**Check EFI fuse (See page DI–387, step 2).**

NG → **Check for short in all harness and components connected to EFI fuse (See attached wiring diagram).**

OK

8	**Check EFI main relay (Marking: EFI).**

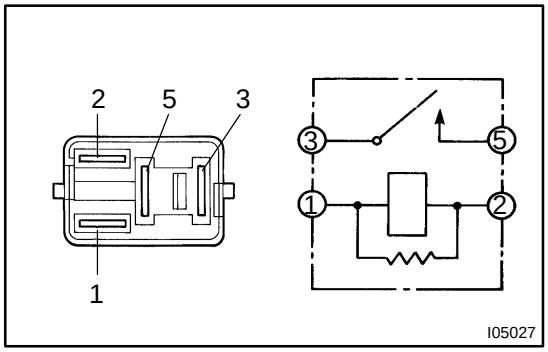

PREPARATION:

Remove the EFI main relay from RB No. 2.

CHECK:

Inspect the EFI main relay.

OK:

Condition	Tester connection	Specified condition
Constant	1 – 2	Continuity
	3 – 5	No continuity
Apply B+ between terminals 1 and 2.	3 – 5	Continuity

NG → **Replace EFI main relay.**

OK

9	**Check for open and short in harness and connector between terminal MREL of ECM and body ground (See page IN–28).**

NG → **Repair or harness or connector.**

OK

Check and repair harness or connector between EFI fuse and battery.

DI8Z0–03

Fuel Pump Control Circuit

CIRCUIT DESCRIPTION

In the diagram below, when the engine is cranked, current flows from terminal ST of the ignition switch to the starter relay coil and also current flows to terminal STA of the ECM (STA signal).
When the STA signal and NE signal are input to the ECM, Tr is turned on, current flows to the coil of the circuit opening relay, the relay switches on, power is supplied to the fuel pump and the fuel pump operates. While the NE signal is generated (engine running), the ECM keeps Tr on (circuit opening relay on) and the fuel pump also keeps operating.

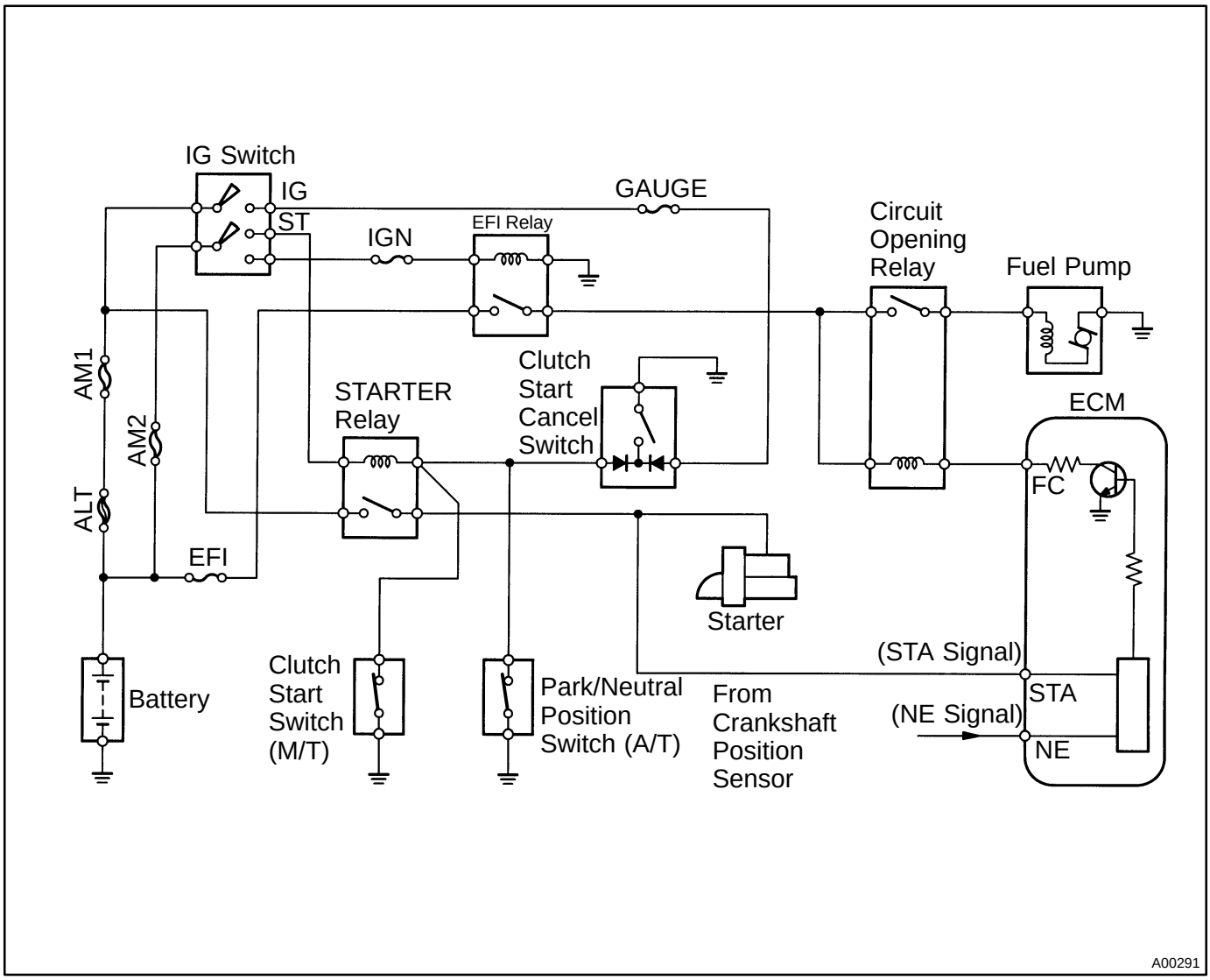

WIRING DIAGRAM

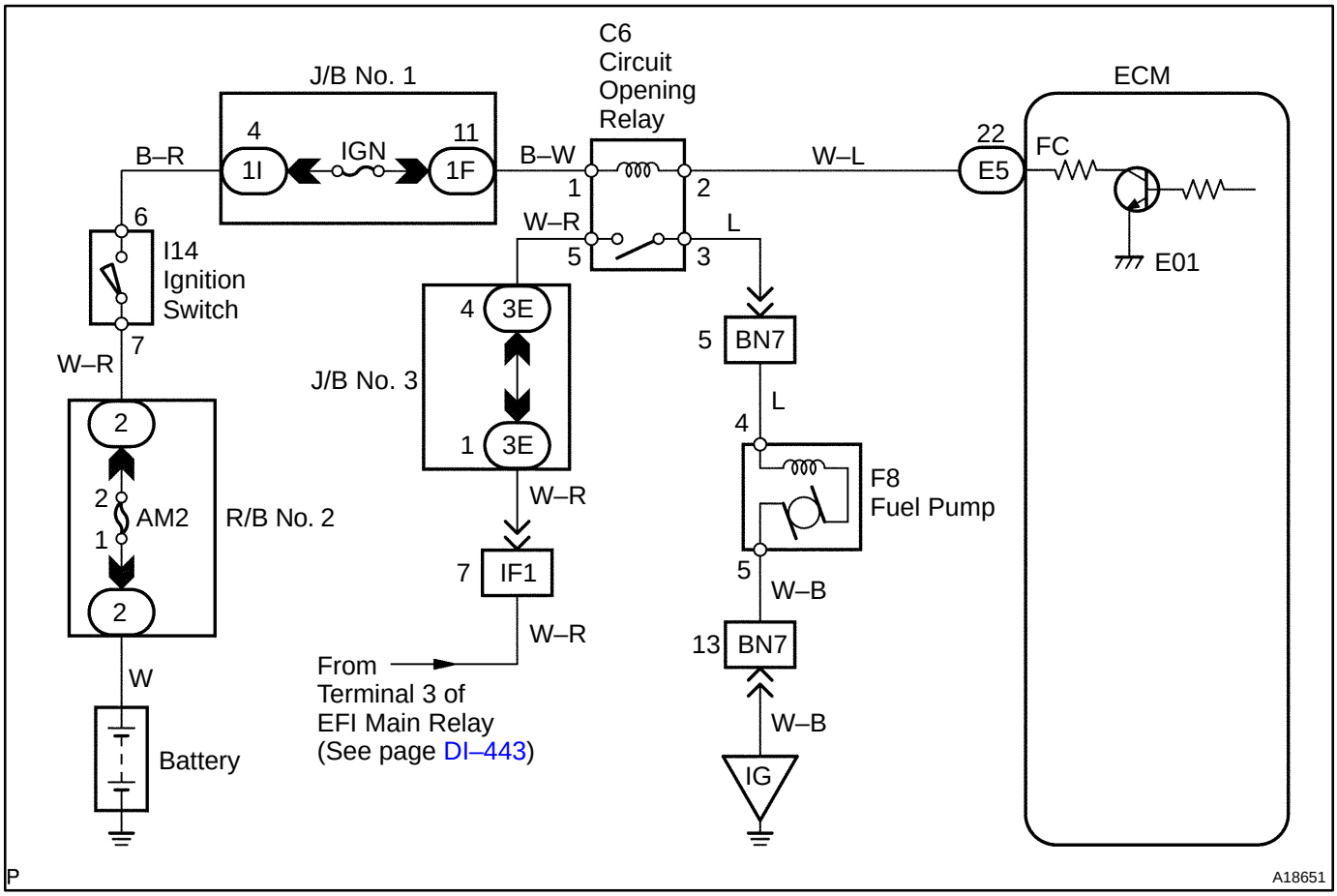

INSPECTION PROCEDURE

Hand–held tester:

1	**Check operation of fuel pump.**

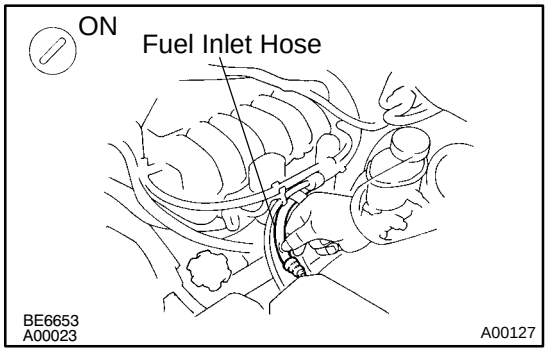

PREPARATION:

(a) Connect the hand–held tester to the DLC3.

(b) Turn the ignition switch ON and push the hand–held tester main switch ON.

(c) Select the item ”DIAGNOSIS/ENHANCED OBD II/ACTIVE TEST/FUEL PUMP/SPD”.

CHECK:

Check for the fuel pressure in the fuel inlet hose when it is pinched by hand.

OK:

There is pressure in the fuel inlet hose.

HINT:

At this time, you will hear a fuel flowing noise.

OK → Proceed to next circuit inspection shown on problem symptoms table.

NG

2	Check fuel pump (See page SF–5).

NG → Replace fuel pump.

OK

3	Check circuit opening relay (See page SF–47).

NG → Replace circuit opening relay.

OK

4	Check for open in harness and connector between circuit opening relay and fuel pump, and fuel pump and body ground (See page IN–28).

NG → Repair or replace harness or connector.

OK

5	Check voltage between terminal FC of ECM and body ground.

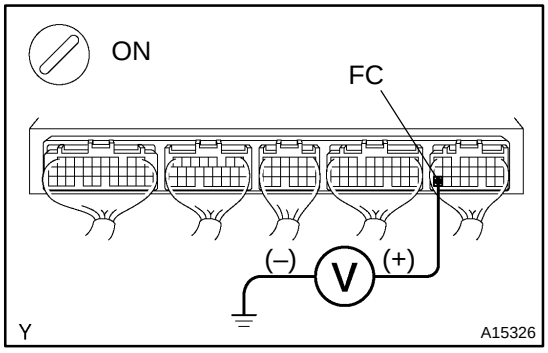

PREPARATION:

(a) Remove the glove compartment (See page SF–63).

(b) Turn the ignition switch ON.

CHECK:

Measure the voltage between terminal FC of the ECM connector and the body ground.

OK:

Voltage: 9 – 14 V

OK	**Proceed to next circuit inspection shown on problem symptoms table.**

NG

6	**Check for open in harness and connector between circuit opening relay and ECM (See page IN–28).**

NG	**Repair or replace harness or connector.**

OK

Check and replace ECM (See page IN–28).

OBD II scan tool (excluding hand–held tester):

1	**Check operation of fuel pump.**

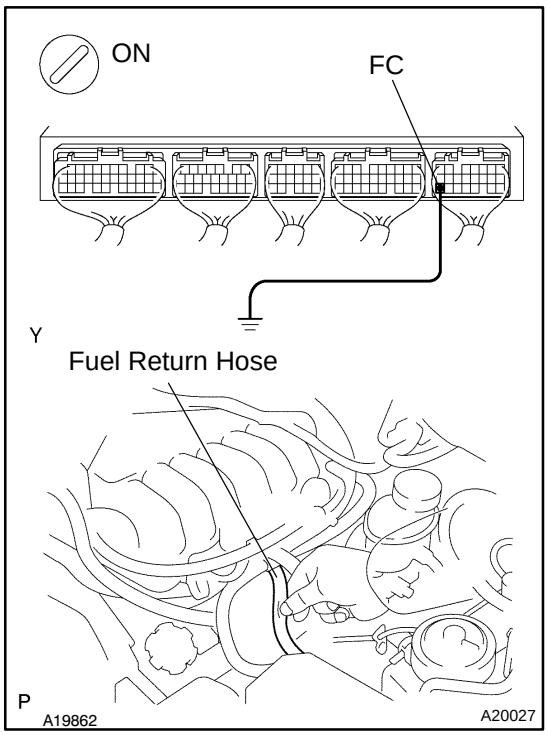

PREPARATION:

(a) Remove the glove compartment (See page SF–63).

(b) Turn the ignition switch ON.

CHECK:

(a) Connect terminal FC of the ECM connector and the body ground.

(b) Check for the fuel pressure in the inlet hose when it is pinched by hand.

OK:

There is pressure in the fuel inlet hose.

HINT:

At this time, you will hear a fuel flowing noise.

OK	**Proceed to next circuit inspection shown on problem symptoms table.**

NG

2	Check fuel pump (See page SF–5).

NG → Replace fuel pump.

OK

3	Check circuit opening relay (See page SF–47).

NG → Replace circuit opening relay.

OK

4	Check for open in harness and connector between circuit opening relay and fuel pump, and fuel pump and body ground (See page IN–28).

NG → Repair or replace harness or connector.

OK

5	Check voltage between terminal FC of ECM connector and body ground.

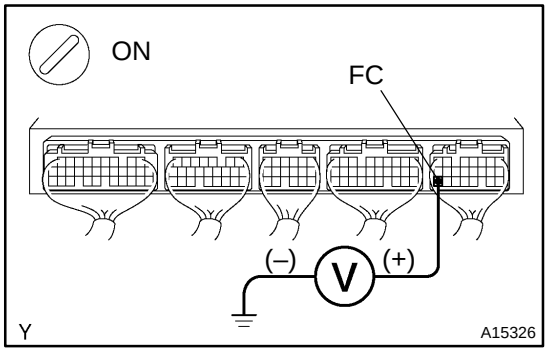

PREPARATION:

(a) Remove the glove compartment (See page SF–63).

(b) Turn the ignition switch ON.

CHECK:

Measure the voltage between terminal FC of the ECM connector and the body ground.

OK:

Voltage: 9 – 14 V

OK → Proceed to next circuit inspection shown on problem symptoms table.

NG

6	**Check for open in harness and connector between circuit opening relay and ECM (See page IN–28).**

NG → **Repair or replace harness or connector.**

OK

Check and replace ECM (See page IN–28).

DTC	P2A00	A/F Sensor Circuit Slow Response (Bank 1 Sensor 1)

CIRCUIT DESCRIPTION

Refer to DTC P2195 and P2196 on page DI–421.

DTC No.	DTC Detection Condition	Trouble Area
P2A00	In condition (a), (b) and (c), when the A/F sensor output voltage change value is below the regular value against the fuel trim change value, the ECM judges that A/F sensor circuit has slow response: (2 trip detection logic) (a) After engine is warmed up (b) During vehicle driving at engine speed 1,400 rpm or more (c) Vehicle speed 60 km/h (38 mph) or more	• Open or short in A/F sensor circuit • A/F sensor • A/F sensor heater • EFI main relay • Air induction system • Fuel pressure • Injector • ECM

WIRING DIAGRAM

Refer to DTC P0134 on page DI–278.

INSPECTION PROCEDURE

HINT:

Hand–held tester only:

The narrowing down the trouble area is possible by performing ACTIVE TEST of the following ”A/F CONTROL” (A/F sensor, heated oxygen sensor or another can be distinguished).

Perform ACTIVE TEST by hand–held tester (A/F CONTROL).

HINT:

”A/F CONTROL” is an ACTIVE TEST which change the injection volume to –12.5 % or +25 %.

(1) Connect the hand–held tester to the DLC3 on the vehicle.
(2) Turn the ignition switch ON.
(3) Warm up the engine with the engine speed at 2,500 rpm for approx. 90 sec.
(4) Select the item ”DIAGNOSIS/ENHANCED OBD II/ACTIVE TEST/ A/F CONTROL”.
(5) Perform ”A/F CONTROL” when idle condition (press the ← or → button).

Result:

A/F sensor reacts in synchronizing with increase and decrease of injection volume (+25 % → rich output: Less than 3.0 V, –12.5 % → lean output: More than 3.35 V)

Heated oxygen sensor reacts in synchronizing with increase and decrease of injection volume (+25 % → rich output: More than 0.55 V, –12.5 % → lean output: Less than 0.4 V)

NOTICE:

However, there is a few second delay in the A/F sensor output. And there is about 20 seconds delay in the heated oxygen sensor.

	Output voltage of A/F sensor (sensor 1)	Output voltage of heated oxygen sensor (sensor 2)	Mainly suspect trouble area
Case 1	Injection volume +25 % –12.5 % Output voltage More than 3.35 V Less than 3.0 V **OK**	Injection volume +25 % –12.5 % Output voltage More than 0.55 V Less than 0.4 V **OK**	—
Case 2	Injection volume +25 % –12.5 % Output voltage No reaction **NG**	Injection volume +25 % –12.5 % Output voltage More than 0.55 V Less than 0.4 V **OK**	A/F sensor (A/F sensor, heater, A/F sensor circuit)
Case 3	Injection volume +25 % –12.5 % Output voltage More than 3.35 V Less than 3.0 V **OK**	Injection volume +25 % –12.5 % Output voltage No reaction **NG**	Heated oxygen sensor (heated oxygen sensor, heater, heated oxygen sensor circuit)
Case 4	Injection volume +25 % –12.5 % Output voltage No reaction **NG**	Injection volume +25 % –12.5 % Output voltage No reaction **NG**	Extremely rich or lean of the actual air–fuel ratio (Injector, fuel pressure, gas leakage in exhaust system, etc)

The following procedure of A/F CONTROL enable that to check its output (show its graph indication) of A/F sensor and heated oxygen sensor.
To display the graph indication. Select and push the ”YES or NO” button 2 data ”AFS B1S1 and O2S B1S2” or ”AFS B2S1 and O2S B2S2” and press button ”4” after selecting ”ACTIVE TEST/ A/F CONTROL/USER DATA”.
HINT:

- The A/F sensor signal must be checked using the hand–held tester or the OBD II scan tool.
- DTC P2A00 may be also detected, when the air fuel ratio is stuck rich or lean.
- A low A/F sensor voltage could be caused by a rich air fuel mixture. Check for conditions that would cause the engine to run rich.
- A high A/F sensor voltage could be caused by a lean air fuel mixture. Check for conditions that would cause the engine to run lean.
- Read freeze frame data using the hand–held tester or the OBD II scan tool, as freeze frame records the engine conditions when a malfunction is detected. When troubleshooting, it is useful for determining whether the vehicle was running or stopped, the engine was warmed up or not, the air–fuel ratio was lean or rich, etc. at the time of the malfunction.

1	**Are there any other codes (besides DTC P2A00) being output?**

YES → **Go to relevant DTC chart (See page DI–231).**

NO

2	**Connect OBDII scan tool or hand–held tester, and read value for voltage output of A/F sensor.**

PREPARATION:

(a) Connect the hand–held tester or the OBD II scan tool to the DLC 3.
(b) Warm up the A/F sensor (bank 1 sensor 1) with the engine at 2,500 rpm for approximately 90 seconds.
(c) Read A/F sensor voltage on the OBD II scan tool or hand–held tester.

CHECK:

(a) Hand–held tester only:
Select the ”DIAGNOSIS/ENHANCED OBD II/SNAPSHOT/MANUAL SNAPSHOT/USER DATA” mode on the hand–held tester.
(b) Select ”AFS B1 S1/ENGINE SPD” and press button ”YES”.
(c) Monitor the A/F sensor voltage carefully.
(d) Check the A/F sensor voltage under the condition as follows.
  (1) Allow engine to idle for 30 seconds.
  (2) Engine is racing at approx. 2,500 rpm (when engine revolution is not suddenly changed).
  (3) Raise the engine speed to 4,000 rpm and release the accelerator pedal fully closed quickly.

OK:

Standard:

Condition (1) and (2)

Voltage change a little in the vicinity of 3.3 V (0.66 V)* (between approx. 3.1 – 3.5 V) as shown in the illustration.

Condition (3)

A/F ratio sensor voltage increase to 3.8 V (0.76 V)* or more during engine deceleration (when fuel cut) as shown in the illustration.

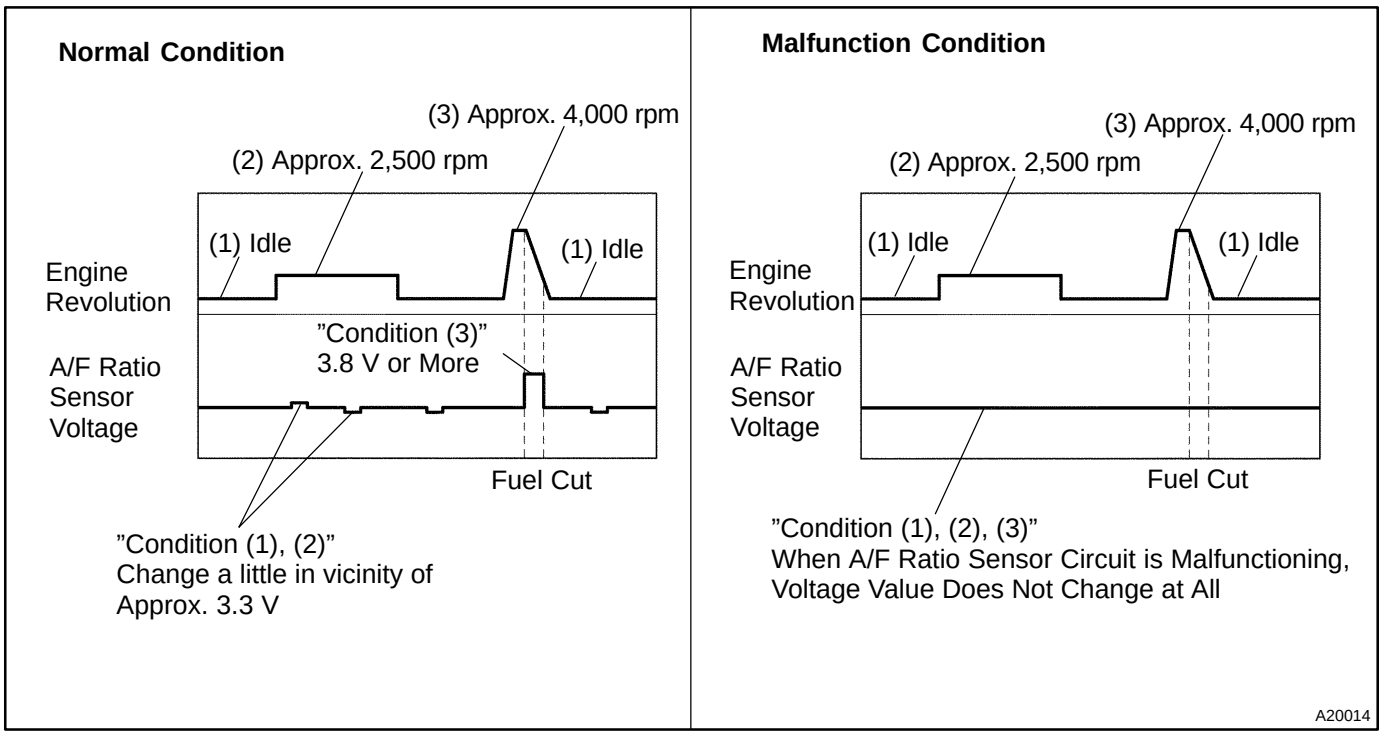

HINT:

- Whenever the output voltage of the A/F sensor remains at approx. 3.3 V (0.660 V)* (see dwg. 2) under any conditions as well as the above conditions, the A/F sensor may have an open–circuit. (This will happen also when the A/F sensor heater has an open–circuit.)
- Whenever the output voltage of the A/F sensor remains at a certain value of approx. 3.8 V (0.76 V)* or more, or 2.8 V (0.56 V)* or less (see dwg. 2) under any conditions as well as the above conditions, the A/F sensor may have a short–circuit.
- The ECM will stop fuel injection (fuel cut) during engine deceleration. This will cause a lean condition and should result in a momentary increase in A/F ratio sensor voltage.
- The ECM must establish a closed throttle position learned value to perform fuel cut. If the battery terminal has been disconnected, the vehicle must be driven over 10 mph to allow the ECM to relearn the closed throttle position.
- When the vehicle is driven:
  In the case that the output voltage of the A/F sensor is below 2.8 V (0.76 V)* during fuel enrichment (for example, when the vehicle tries to overtake another vehicle on a highway, the vehicle speed is suddenly increased with the accelerator pedal fully depressed), the A/F sensor are functioning normally.
- The A/F sensor is a current output element, and therefore the current is converted into voltage inside the ECM. If measuring voltage at connectors of A/F ratio sensor or ECM, you can obtain a constant voltage.

*: When using the OBD II scan tool (excluding hand–held tester).

OK	**Go to step 13.**

NG

3	Check resistance of A/F sensor heater.

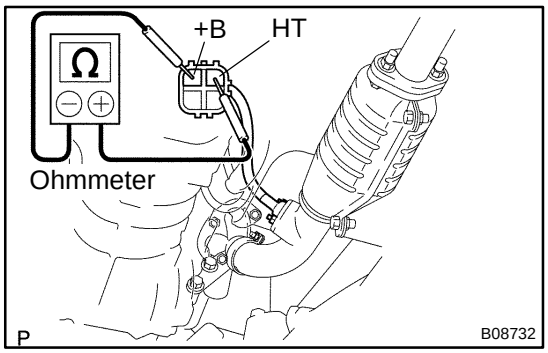

PREPARATION:
Disconnect the sensor connector.
CHECK:
Using an ohmmeter, measure the resistance between terminals +B and HT.
OK:

at 20˚C (68˚F)	0.8 – 1.4 Ω
at 800˚C (1,472˚F)	1.8 – 3.2 Ω

NG → **Replace A/F sensor.**

OK

4	Check EFI main relay (Marking : EFI).

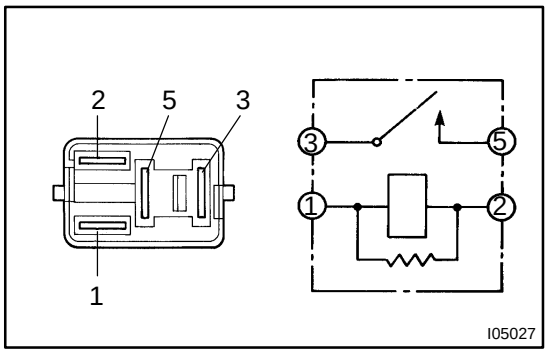

PREPARATION:
Remove the EFI main relay from RB No. 2.
CHECK:
Inspect the EFI main relay.
OK:

Condition	Tester connection	Specified condition
Constant	1 – 2	Continuity
	3 – 5	No continuity
Apply B+ between terminals 1 and 2.	3 – 5	Continuity

NG → **Replace EFI main relay**

OK

5	Check for open and short in harness and connector between ECM and A/F sensor (See page IN–28).

NG → **Repair or replace harness or connector.**

OK

6	Check air induction system (See page SF–1).

NG → Repair or replace.

OK

7	Check fuel pressure (See page SF–5).

NG → Check and repair fuel pump, pressure regulator, fuel pipe line and filter (See page SF–1).

OK

8	Check injector injection (See page SF–19).

NG → Replace injector.

OK

9	Replace A/F sensor.

GO

10	Perform confirmation driving pattern (See page DI–421).

GO

11	Is there DTC P2A00 being output again?

YES → Check and replace ECM (See page IN–28) and perform confirmation driving pattern (See page DI–421).

NO

12	Did vehicle run out of fuel in past?

NO → Check for intermittent problems (See page DI–218).

YES

DTC P2A00 is caused by shortage of fuel.

13	Perform confirmation driving pattern (See page DI–421).

Go

14	Is there DTC P2A00 being output again?

NO → Go to step 18.

YES

15	Replace A/F sensor.

GO

16	Perform confirmation driving pattern (See page DI–421).

GO

17	Is there DTC P2A00 being output again?

YES → Check and replace ECM (See page IN–28) and perform confirmation driving pattern (See page DI–421).

NO

18	Did vehicle run out of fuel in past?

NO → Check for intermittent problems (See page DI–218).

YES

DTC P2A00 is caused by shortage of fuel.

DIA9T–02

DTC	P1126	Magnetic Clutch Circuit

CIRCUIT DESCRIPTION

Magnetic clutch is mounted between the throttle motor and the valve, and it connects the throttle motor with the throttle valve.
Therefore, the throttle motor opens and closes the throttle valve through the magnetic clutch.
If the electric throttle control system has a malfunction, the magnetic clutch separates the throttle motor from the throttle valve in order not to operate the throttle valve by the throttle motor.
If this DTC is stored, the ECM shuts down the power for the throttle motor and the magnetic clutch, and the throttle valve is fully closed by the return spring.
However, the opening angle of the throttle valve can be controlled by the accelerator pedal through the throttle cable.

DTC No.	DTC Detecting Condition	Trouble Area
P1126	Condition (a) continues for 0.8 seconds: (a) Magnetic clutch current ≧ 1.4 A or ≦ 0.4 A	• Open or short in magnetic clutch circuit • Magnetic clutch • ECM
	Condition (a) continues for 1.5 seconds: (a) Magnetic clutch current ≧ 1.0 A or ≦ 0.8 A	

WIRING DIAGRAM

Refer to DTC P2102 and P2103 on page DI–403.

INSPECTION PROCEDURE

HINT:
Read freeze frame data using the hand–held tester or the OBD II scan tool, as freeze frame data records the engine conditions when a malfunction is detected. When troubleshooting, it is useful for determining whether the vehicle was running or stopped, the engine was warmed up or not, the air–fuel ratio was lean or rich, etc. at the time of the malfunction.

1	**Check magnetic clutch circuit.**

When using hand–held tester:

PREPARATION:

(a) Connect the hand–held tester to the DLC3.

(b) Turn the ignition switch ON and push the hand–held tester main switch ON.

CHECK:

Read the magnetic clutch current value on the hand–held tester.

OK:

Current: 0.8 – 1.0 A

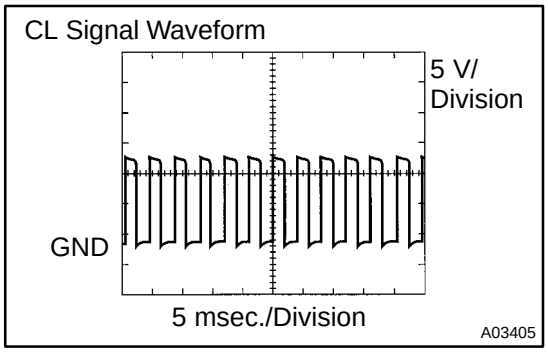

When not using hand–held tester:

PREPARATION:

(a) Connect the oscilloscope between terminals CL+ and CL– of the ECM connector.

(b) Start the engine.

CHECK:

Check the waveform between terminals CL+ and CL– of the ECM connector when the engine is idling.

OK:

The correct waveform is as shown.

NG → **Go to step 4.**

OK

2	**Check magnetic clutch (See page SF–28).**

NG → **Replace throttle control motor with magnetic clutch (See page SF–30).**

OK

3	**Check for open and short in harness and connector between magnetic clutch and ECM (See page IN–28).**

NG → **Repair or replace.**

OK

4	**Check operation of magnetic clutch.**

CHECK:

(a) Clear the DTC.

(b) Perform the following steps and check the DTC.

(1) Turn the ignition switch ON.

(2) Start the engine.

(3) Turn the ignition switch OFF and wait 3 seconds.

(4) Turn the ignition switch ON.

OK:

DTC P1126 is not stored.

NG → **Replace throttle control motor with magnetic clutch (See page SF–30).**

OK

Check and replace ECM (See page IN–28).

DTC	P2118	Throttle Actuator Control Motor Current Range/Performance

CIRCUIT DESCRIPTION

Battery positive voltage is supplied to terminal +BM of the ECM even once when the ignition switch is OFF for the ETCS control system.
If this DTC is stored, the ECM shuts down the power for the ETCS motor and the magnetic clutch, and the ETCS valve is fully closed by the return spring.
However, the opening angle of the ETCS valve can be controlled by the accelerator pedal through the ETCS cable.

DTC No.	DTC Detecting Condition	Trouble Area
P2118	Open in ETCS power source circuit	• Open in ETCS power source circuit • ECM

WIRING DIAGRAM

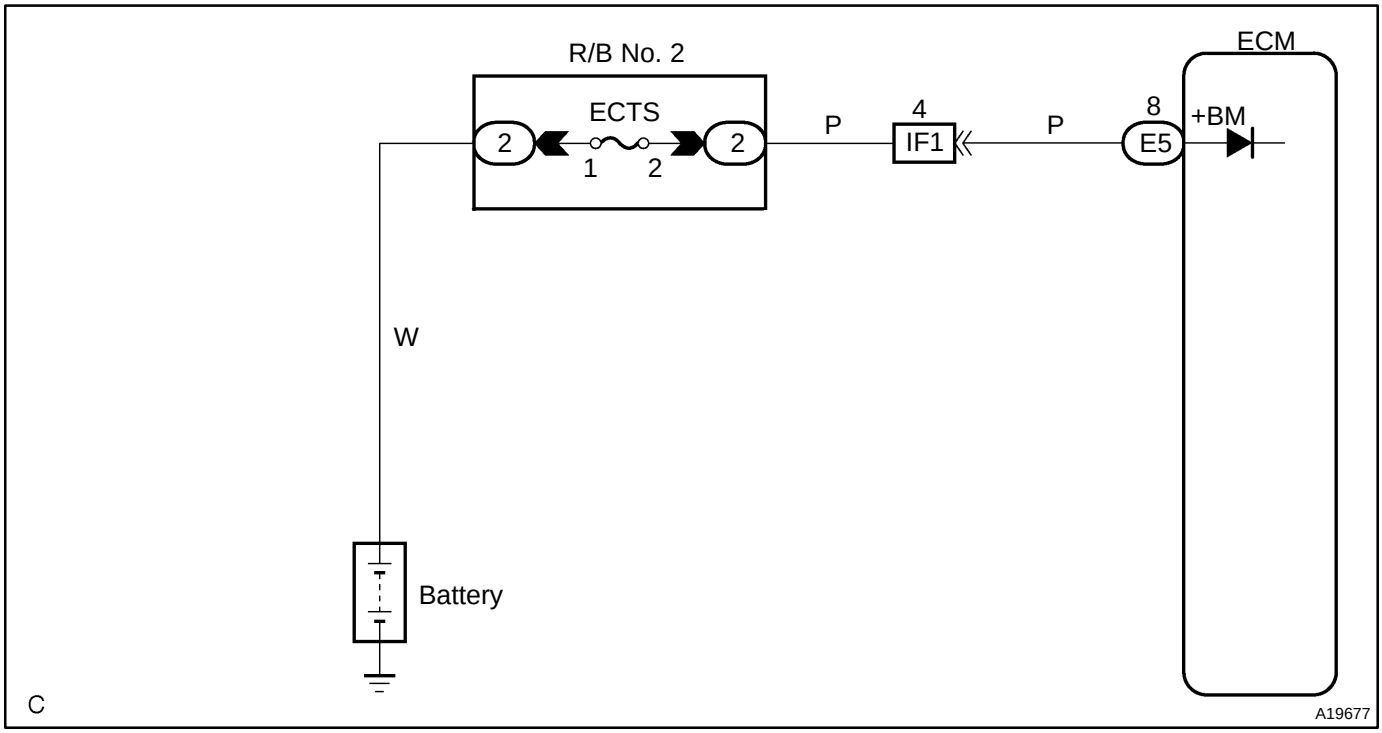

INSPECTION PROCEDURE

HINT:
Read freeze frame data using the hand–held tester or the OBD II scan tool, as freeze frame data records the engine conditions when a malfunction is detected. When troubleshooting, it is useful for determining whether the vehicle was running or stopped, the engine was warmed up or not, the air–fuel ratio was lean or rich, etc. at the time of the malfunction.

1	Check ECTS fuse.

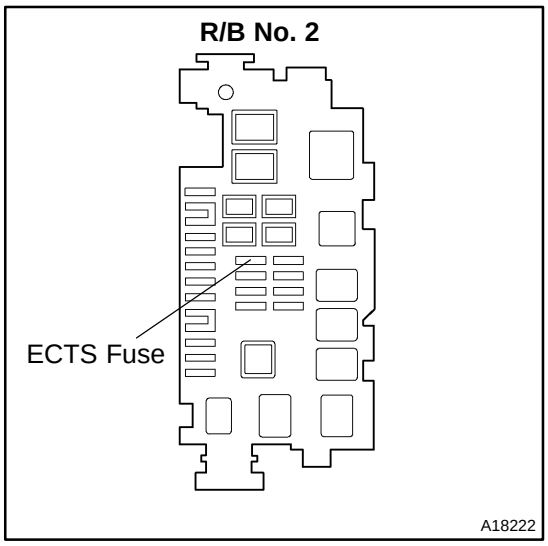

PREPARATION:
Remove the ECTS fuse from the R/B No. 2.
CHECK:
Check the continuity of the ECTS fuse.
OK:
Continuity

NG → **Check for short in all harness and components connected to ECTS fuse.**

OK ↓

2	Check voltage between terminal +BM of ECM connector and body ground.

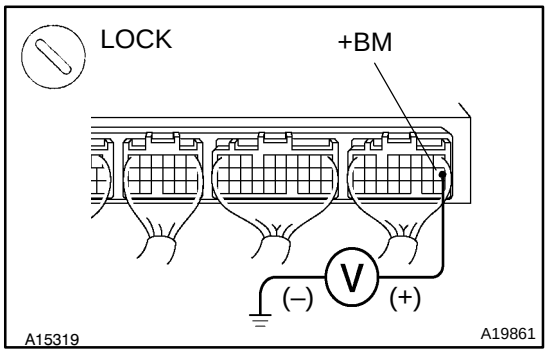

PREPARATION:
Remove the glove compartment (See page SF–63).
CHECK:
Measure the voltage between terminal +BM of the ECM connector and body ground.
OK:
Voltage: 9 – 14 V

OK → **Check and replace ECM (See page IN–28).**

NG ↓

3	**Check harness and connector between battery and ETCS fuse, and ETCS fuse and ECM (See page IN–28).**

NG → **Repair or replace harness or connector**

OK

Check and replace ECM (See page IN–28).

DIA9X–02

DTC	P2119	Throttle Actuator Control Throttle Body Range Performance

CIRCUIT DESCRIPTION

The Electric Throttle Control System (ETCS) is composed of the throttle motor to operate the throttle valve, the electromagnetic clutch to connect the throttle motor with the throttle valve, the throttle position sensor to detect the opening angle of the throttle valve, the accelerator pedal position sensor to detect the accelerator pedal position, the ECM to control the ETCS and the one valve type throttle body.
The ECM controls the throttle motor to make the throttle valve opening angle properly in response driving condition.
The throttle position sensor which is mounted on the throttle body detects the opening angle of the throttle valve, and it provides feedback to the ECM to control the throttle motor.
If the ETCS has a malfunction, the ECM shuts down the power for the throttle motor and the magnetic clutch, and the throttle valve is fully closed by the return spring.
However, the opening angle of the throttle valve can be controlled by the accelerator pedal through the throttle cable.

DTC No.	DTC Detecting Condition	Trouble Area
P2119	Throttle opening angle continues to vary great from target throttle opening angle	• Electric throttle control system • ECM

WIRING DIAGRAM

Refer to DTC P2102 and P2103 on page DI–403.

INSPECTION PROCEDURE

HINT:
Read freeze frame data using the hand–held tester or the OBD II scan tool, as freeze frame data records the engine conditions when a malfunction is detected. When troubleshooting, it is useful for determining whether the vehicle was running or stopped, the engine was warmed up or not, the air–fuel ratio was lean or rich, etc. at the time of the malfunction.

1	**Are there any other codes (besides DTC P2119) being output?**

YES → **Go to relevant DTC chart (See page DI–231).**

NO

2	**Check throttle body (See page SF–28)**

NG → **Replace throttle body (See page SF–30).**

OK

3	**Replace ECM and Clear DTC (Check if DTC output recur).**

PREPARATION:

(a) Replace the ECM.
(b) Clear the DTC (See page DI–218).
(c) Start and warm up the engine.
(d) Drive the engine at idle for 15 sec. or more.

CHECK:

Read the DTC using the hand–held tester or the OBD II scan tool.

OK:

Standard: No DTC output

OK → **System is OK.**

NG

Replace throttle body (See page SF–30).

DIB25–01

DTC	P2121	Throttle/Pedal Position Sensor/Switch ”D” Circuit Range/Performance

CIRCUIT DESCRIPTION

HINT:
This is repair procedure of ”accelerator pedal position sensor”.
Refer to DTC P2120 on page DI–412.

DTC No.	DTC Detection Condition	Trouble Area
P2121	Condition (a) and (b) continues for 2.0 seconds: (a) Difference between VPA and VPA2 exceeds the threshold (b) Idle is OFF	• Accelerator pedal position sensor

INSPECTION PROCEDURE

HINT:

- If different DTCs that are related to different systems are output simultaneously while terminal E2 is used as a ground terminal, terminal E2 may be open.
- Read freeze frame data using the hand–held tester or the OBD II scan tool, as freeze frame data records the engine conditions when a malfunction is detected. When troubleshooting, it is useful for determining whether the vehicle was running or stopped, the engine was warmed up or not, the air–fuel ratio was lean or rich, etc. at the time of the malfunction.

1	**Check accelerator pedal position sensor (See page SF–28).**

NG → **Replace accelerator pedal position sensor (See page SF–30).**

OK ↓

2	**Check voltage between terminals VPA and E2, and VPA2 and E2 of ECM connector.**

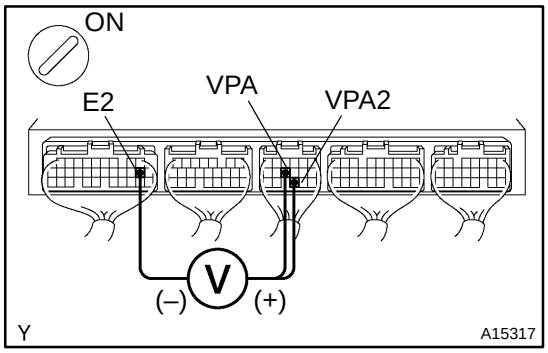

PREPARATION:
(a) Remove the glove compartment (See page SF–63).
(b) Turn the ignition switch ON.

CHECK:
Measure the voltage between terminals VPA and E2, and VPA2 and E2 of the ECM connectors.

OK:

Accelerator pedal	Voltage	
	VPA – E2	VPA2 – E2
Released	0.3 – 0.9 V	1.8 – 2.7 V
Depressed	3.2 – 4.8 V	4.7 – 5.1 V

OK → Check and replace ECM (See page IN–28).

NG

3	Check for open and short in harness and connector in VC VPA, VPA2 and E2 circuits between ECM and accelerator pedal sensor (See page IN–28).

NG → Repair or replace harness or connector.

OK

Check and replace accelerator pedal position sensor (See page SF–30).

DIB22–01

DTC	P2102	Throttle Actuator Control Motor Circuit Low

DTC	P2103	Throttle Actuator Control Motor Circuit High

CIRCUIT DESCRIPTION

The throttle motor is operated by the ECM and it opens and closes the throttle valve.
The opening angle of the throttle valve is detected by the throttle position sensor which is mounted on the throttle body and it provides feedback to the ECM to control the throttle motor in order to the throttle valve opening angle properly in response to the driving condition.
If this DTC is stored, the ECM shuts down the power for the throttle motor and the magnetic clutch, and the throttle valve is fully closed by the return spring.
However, the opening angle of the throttle valve can be controlled by the accelerator pedal through the throttle cable.

DTC No.	DTC Detecting Condition	Trouble Area
P2102 P2103	Conditions (a) and (b) continue for 0.5 seconds: (a) Throttle control motor output duty ≧ 80 % (b) Throttle control motor current < 0.5 A	• Open or short in throttle control motor circuit • Throttle control motor • ECM
	Throttle control motor current ≧ 16 A	
	Condition (a) continues for 0.6 seconds: (a) Throttle control motor current ≧ 7 A	

WIRING DIAGRAM

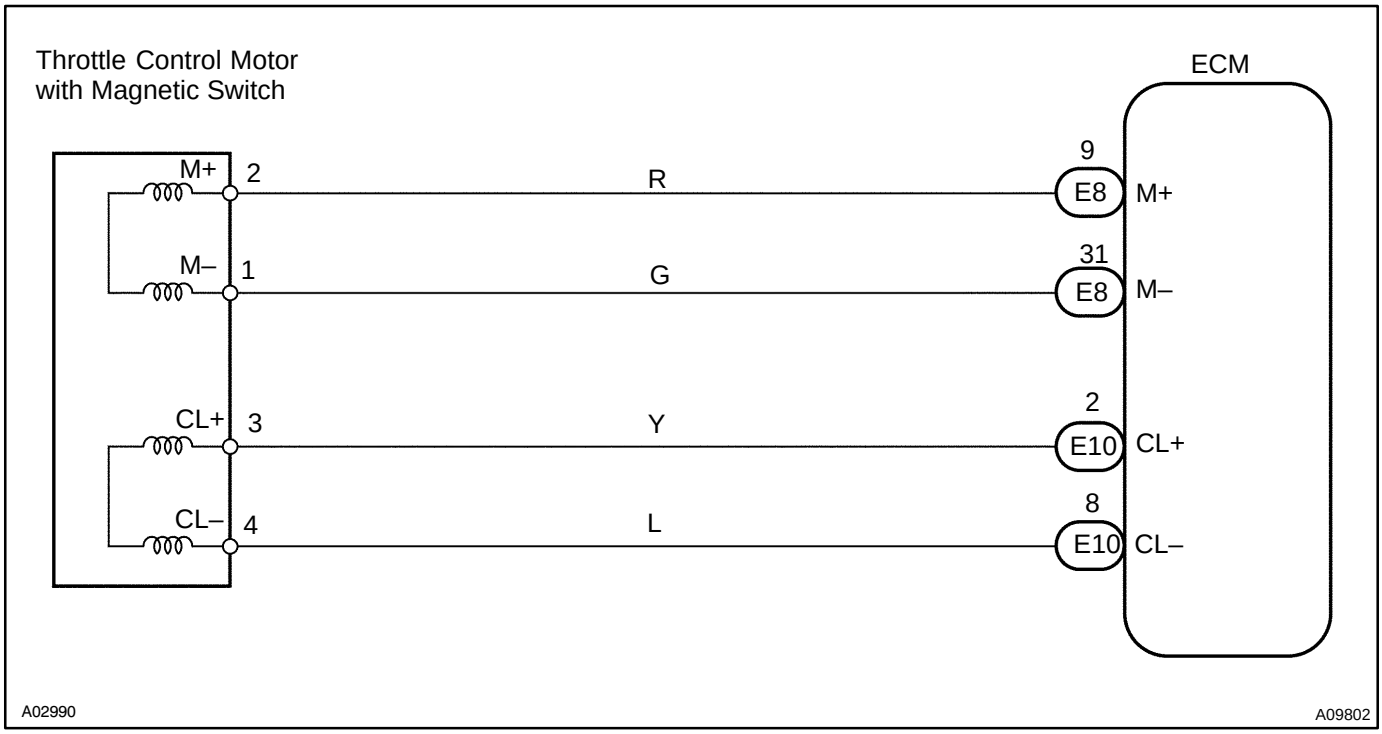

INSPECTION PROCEDURE

HINT:

Read freeze frame data using the hand–held tester or the OBD II scan tool. Because freeze frame records the engine conditions when a malfunction is detected. When troubleshooting it is useful for determining whether the vehicle was running or stopped, the engine was warmed up or not, the air–fuel ratio was lean or rich, etc. at the time of the malfunction.

1	**Check throttle control motor (See page SF–28).**

NG → **Replace throttle control motor (See page SF–30).**

OK

2	**Check for open and short in harness and connector between throttle control motor and ECM (See page IN–28).**

NG → **Repair or replace.**

OK

Check and replace ECM (See page IN–28).

DTC	P2111	Throttle Actuator Control System –Stuck Open

DTC	P2112	Throttle Actuator Control System –Stuck Closed

CIRCUIT DESCRIPTION

Throttle motor is operated by the ECM and it opens and closes the throttle valve by a gear. The opening angle of the throttle valve is detected by the throttle position sensor which is mounted on the throttle body and it provides feedback to the ECM to control the throttle motor in order the throttle valve opening angle properly in response to driving condition. If this DTC is stored, the ECM shuts down the power for the throttle motor and the magnetic clutch, and the throttle valve is fully closed by the return spring. However, the opening angle of the throttle valve can be controlled by the accelerator pedal through the throttle cable.

DTC No.	DTC Detecting Condition	Trouble Area
P2111 P2112	Lock throttle control motor during control throttle control motor	• Throttle control motor circuit • Throttle control motor • Throttle body • Throttle valve

INSPECTION PROCEDURE

HINT:

Read freeze frame data using the hand–held tester or the OBD II scan tool, as freeze frame data records the engine conditions when a malfunction is detected. When troubleshooting, it is useful for determining whether the vehicle was running or stopped, the engine was warmed up or not, the air–fuel ratio was lean or rich, etc. at the time of the malfunction.

1	Visually check throttle valve.

PREPARATION:

Remove the intake air connector.

CHECK:

Check whether or not a foreign body is caught between the throttle valve and the housing.

NG → **Remove a foreign body and clean throttle body.**

OK

2	Check throttle control motor (See page SF–28).

NG → Replace throttle control motor (See page SF–30).

OK

3	Check for open and short in harness and connector between throttle control motor and ECM (See page IN–28).

NG → Repair or replace. harness or connector

OK

Check for intermittent problems (See page DI–218).

DTC	P2120	Throttle/Pedal Position Sensor/Switch ”D” Circuit

DTC	P2122	Throttle/Pedal Position Sensor/Switch ”D” Circuit Low Input

DTC	P2123	Throttle/Pedal Position Sensor/Switch ”D” Circuit High Input

DTC	P2125	Throttle/Pedal Position Sensor/Switch ”E” Circuit

DTC	P2127	Throttle/Pedal Position Sensor/Switch ”E” Circuit Low Input

DTC	P2128	Throttle/Pedal Position Sensor/Switch ”E” Circuit High Input

DTC	P2138	Throttle/Pedal Position Sensor/Switch ”D”/”E” Voltage Correlation

CIRCUIT DESCRIPTION

The Accelerator pedal position sensor is mounted on the throttle body and it has the 2 sensors to detects the accelerator position and a malfunction of the accelerator position's own.
The accelerator pedal position sensor is connected with the accelerator pedal by the accelerator wire and the voltage applied to the terminals VPA and VPA2 of the ECM changes between 0 V and 5 V in proportion to the opening angle of the accelerator pedal. The VPA is a signal to indicate the actual accelerator pedal opening angle which is used for the engine control, and the VPA2 is a signal to indicate the information about the opening angle which is used for detecting a malfunction.
The ECM judges the current opening angle of the accelerator pedal from these signals input from terminals VPA and VPA2 and the ECM controls the throttle motor based on these signals.
If this DTC is stored, the ECM shuts down the power for the throttle motor and the magnetic clutch, and the throttle valve is fully closed by the return spring.
However, the opening angle of the throttle valve can be controlled by the accelerator pedal through the throttle cable.

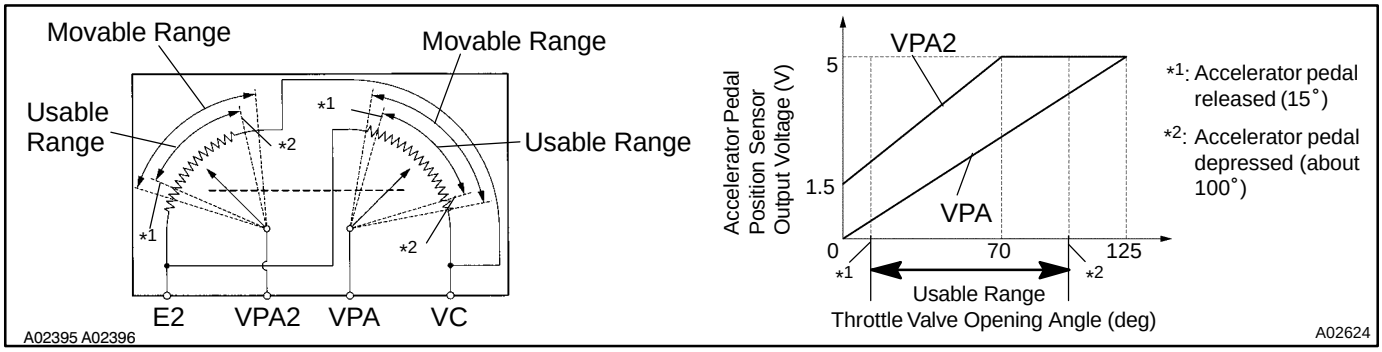

DTC No.	DTC Detection Condition	Trouble Area
P2120	Condition (a) continues for 2.0 sec. or more: (a) VPA1 ≦ 0.2 V and VPA2 ≧ 0.97 deg, or VPA1 ≧ 4.7 V	• Open or short in accelerator pedal position sensor circuit • Accelerator pedal position sensor • ECM
P2122	Condition (a) and (b) continues for 0.5 sec. or more: (a) VPA1 ≦ 0.2 V (b) VPA2 ≧ 0.97 deg	
P2123	Condition (a) and (b) continues for 2.0 sec. or more: (a) VPA1 ≧ 4.7 V	
P2125	Condition (a) continues for 2.0 sec. or more: (a) (VPA2 ≦ 0.5 V and VPA1 ≧ 0.97 deg), or (VPA2 ≧ 4.7 V and 0.2 V ≦ VPA1 ≦ 1.8 V)	
P2127	Condition (a) and (b) continues for 0.5 sec. or more: (a) VPA2 ≦ 0.5 V (b) VPA1 ≧ 0.97 deg	
P2128	Condition (a) and (b) continues for 2.0 sec. or more: (a) VPA2 ≧ 4.97 V (b) 0.2 V ≦ VPA1 ≦ 1.8 V	
P2138	Condition (a) or (b) continues for 2.0 sec. or more: (a) |VPA1 – VPA2| ≦ 0.02 V (b) VPA1 ≦ 0.2 V and VPA2 ≦ 0.5 V	

HINT:
After confirming DTC P2120, P2122, P2123, P2125, P2127, P2128 and P2138 use the OBD II scan tool or the hand–held tester to confirm the throttle valve opening percentage.

Trouble area	Accelerator pedal position expressed as voltage			
	Accelerator pedal released		Accelerator pedal depressed	
	ACCEL POS #1	ACCEL POS #2	ACCEL POS #1	ACCEL POS #2
VC circuit open	0 V	0 V	0 V	0 V
VPA circuit open or ground short	0 V	0.9 – 2.3 V	0 V	3.4 – 5.0 V
VPA2 circuit open or ground short	0.5 – 1.1 V	0 V	3.0 – 4.6 V	0 V
E2 circuit open	5 V	5 V	5 V	5 V

WIRING DIAGRAM

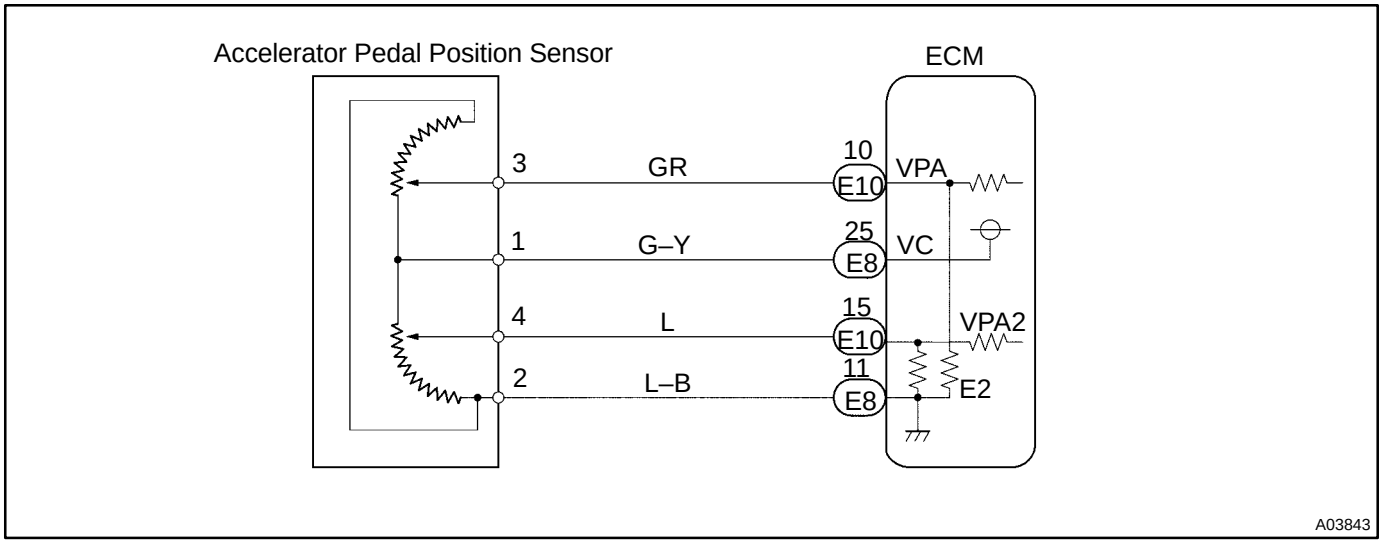

INSPECTION PROCEDURE

HINT:

- If different DTCs that are related to different systems are output simultaneously while terminal E2 is used as a ground terminal, terminal E2 may be open.
- Read freeze frame data using the hand–held tester or the OBD II scan tool, as freeze frame data records the engine conditions when a malfunction is detected. When troubleshooting, it is useful for determining whether the vehicle was running or stopped, the engine was warmed up or not, the air–fuel ratio was lean or rich, etc. at the time of the malfunction.

Hand–held tester:

1	**Connect hand–held tester, and read the voltage for accelerator pedal position sensor data.**

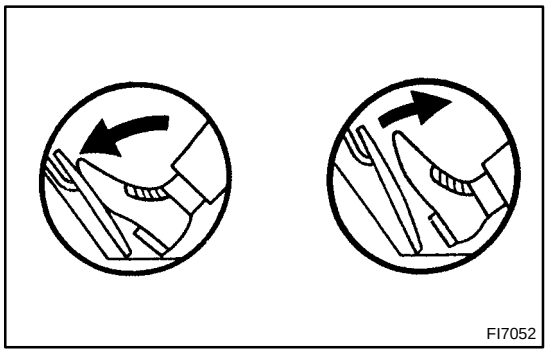

PREPARATION:

(a) Connect the hand–held tester to the DLC3.

(b) Turn the ignition switch ON and push the hand–held tester main switch ON.

CHECK:

Read the voltage for the accelerator pedal position sensor data.

OK:

Accelerator Pedal	VPA	VPA2
Released	0.3 – 0.9 V	1.8 – 2.7 V
Depressed	3.2 – 4.8 V	4.7 – 5.1 V

OK	**Check and replace ECM (See page IN–28).**

NG

2	**Check accelerator pedal position sensor (See page SF–28).**

NG	**Replace accelerator pedal position sensor (See page SF–30).**

OK

3	**Check voltage between terminals VC and E2 of ECM connector.**

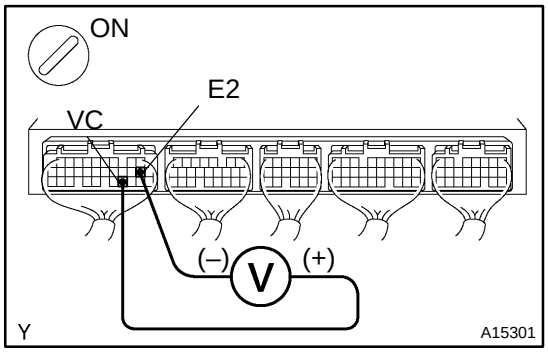

PREPARATION:

(a) Remove the glove compartment (See page SF–63).

(b) Turn the ignition switch ON.

CHECK:

Measure the voltage between terminals VC and E2 of the ECM connector.

OK:

Voltage: 4.5 – 5.5 V

NG	**Check and replace ECM (See page IN–28).**

OK

4	Check voltage between terminals VPA and E2, and VPA2 and E2 of ECM connectors.

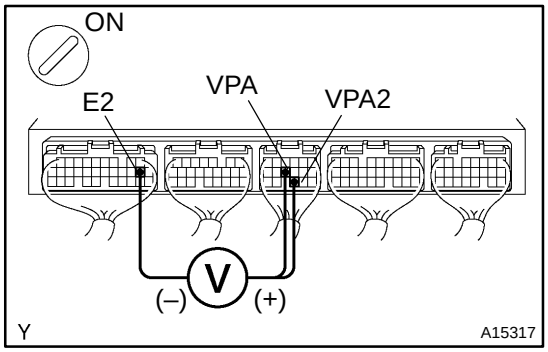

PREPARATION:

(a) Remove the glove compartment (See page SF–63).

(b) Turn the ignition switch ON.

CHECK:

Measure the voltage between terminals VPA and E2, and VPA2 and E2 of the ECM connectors.

OK:

Accelerator pedal	Voltage	
	VPA – E2	VPA2 – E2
Released	0.3 – 0.9 V	1.8 – 2.7 V
Depressed	3.2 – 4.8 V	4.7 – 5.1 V

OK → Check and replace ECM (See page IN–28).

NG

5	Check for open and short in harness and connector in VC VPA, VPA2 and E2 circuits between ECM and accelerator pedal sensor (See page IN–28).

NG → Repair or replace harness or connector.

OK

Check and replace ECM (See page IN–28).

OBD II scan tool (excluding hand–held tester):

1	**Check accelerator pedal position sensor (See page SF–28).**

NG → **Replace accelerator pedal position sensor (See page SF–30).**

OK

2	**Check voltage between terminals VC and E2 of ECM connector.**

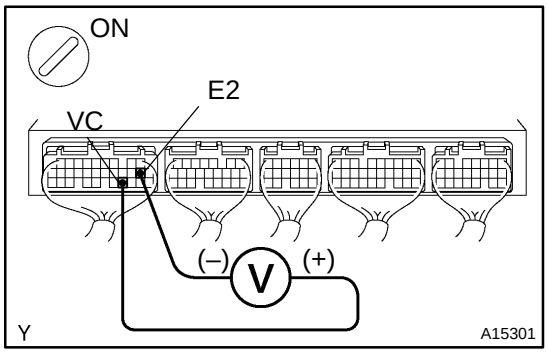

PREPARATION:
(a) Remove the glove compartment (See page SF–63).
(b) Turn the ignition switch ON.

CHECK:
Measure the voltage between terminals VC and E2 of the ECM connector.

OK:
Voltage: 4.5 – 5.5 V

NG → **Check and replace ECM (See page IN–28).**

OK

3	**Check voltage between terminals VPA and E2, and VPA2 and E2 of ECM connector.**

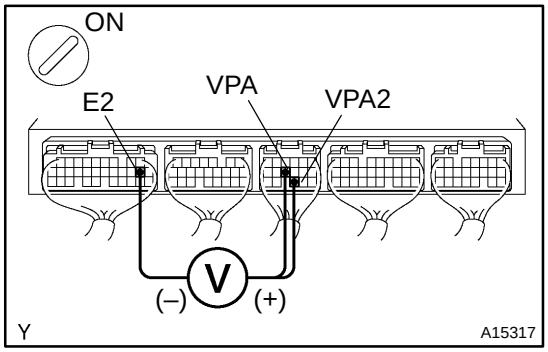

PREPARATION:
(a) Remove the glove compartment (See page SF–63).
(b) Turn the ignition switch ON.

CHECK:
Measure the voltage between terminals VPA and E2, and VPA2 and E2 of the ECM connectors.

OK:

Accelerator pedal	Voltage	
	VPA – E2	VPA2 – E2
Released	0.3 – 0.9 V	1.8 – 2.7 V
Depressed	3.2 – 4.8 V	4.7 – 5.1 V

OK → Check and replace ECM (See page IN–28).

NG

4	Check for open and short in harness and connector in VC VPA, VPA2 and E2 circuits between ECM and accelerator pedal sensor (See page IN–28).

NG → Repair or replace harness or connector.

OK

Check and replace ECM (See page IN–28).

DIB27–01

DTC	P2195	Oxygen (A/F) Sensor Signal Stuck Lean (Bank 1 Sensor 1)

DTC	P2196	Oxygen (A/F) Sensor Signal Stuck Rich (Bank 1 Sensor 1)

CIRCUIT DESCRIPTION

HINT:

This DTC is related to A/F sensor, although the caption is oxygen sensor.

To obtain a high purification rate of the CO, HC and NOx components of the exhaust gas, a three–way catalytic converter is used. But, for the most efficient use of the three–way catalytic converter, the air–fuel ratio must be precisely controlled so that it is always close to the stoichiometric air–fuel ratio.

The A/F sensor has a characteristic that the output voltage* becomes approximately proportional to the existing air–fuel ratio. The A/F sensor output voltage* is used to provide feedback for the ECM to control the air–fuel ratio. By the A/F sensor output, the ECM can determine the deviation amount from the stoichiometric air–fuel ratio and control the proper injection time immediately. If the A/F sensor malfunctions, the ECM is unable to perform the accurate air–fuel ratio control. The A/F sensor is equipped with a heater which heats the zirconia element. The heater is controlled by the ECM. When the intake air volume is low (the temperature of the exhaust gas is low), the current flows to the heater to heat the sensor for the accurate oxygen concentration detection.

*: The voltage value changes at the inside of the ECM only.

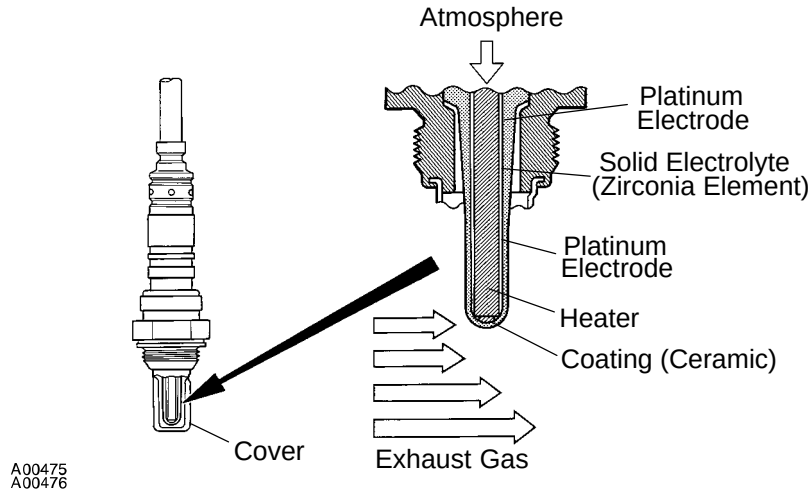

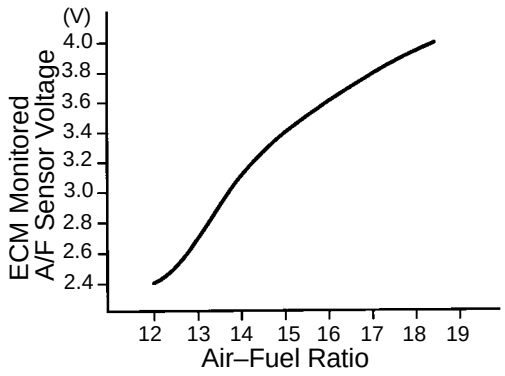

DTC No.	DTC Detection Condition	Trouble Area
P2195	Condition (a) continues for 10.0 sec. or more: (a) A/F sensor voltage > 3.8 V	• Open or short in A/F sensor circuit • A/F sensor • A/F sensor heater • EFI main relay • Air induction system • Fuel pressure • Injector • ECM
P2196	Condition (a) continues for 10.0 sec. or more: (a) A/F sensor voltage < 2.8 V	

HINT:

- After confirming DTC P2195 and P2196, use the hand−held tester or the OBD II scan tool to confirm an output voltage of the A/F sensor (AFS B1 S1) from the ”DIAGNOSIS/ENHANCED OBD II/DATA LIST/ALL”.
- The A/F sensor’s output voltage and the short–term fuel value can be read using the OBD II scan tool or hand–held tester.
- The ECM controls the voltage of AF1+ and AF1– terminals of ECM to the fixed voltage. Therefore, it is impossible to confirm the A/F sensor output voltage without OBD II scan tool or hand–held tester.
- OBD II scan tool (excluding hand–held tester) displays the one fifth of the A/F sensor output voltage which is displayed on the hand–held tester.

WIRING DIAGRAM

Refer to DTC P0134 on page DI–278.

CONFIRMATION DRIVING PATTERN

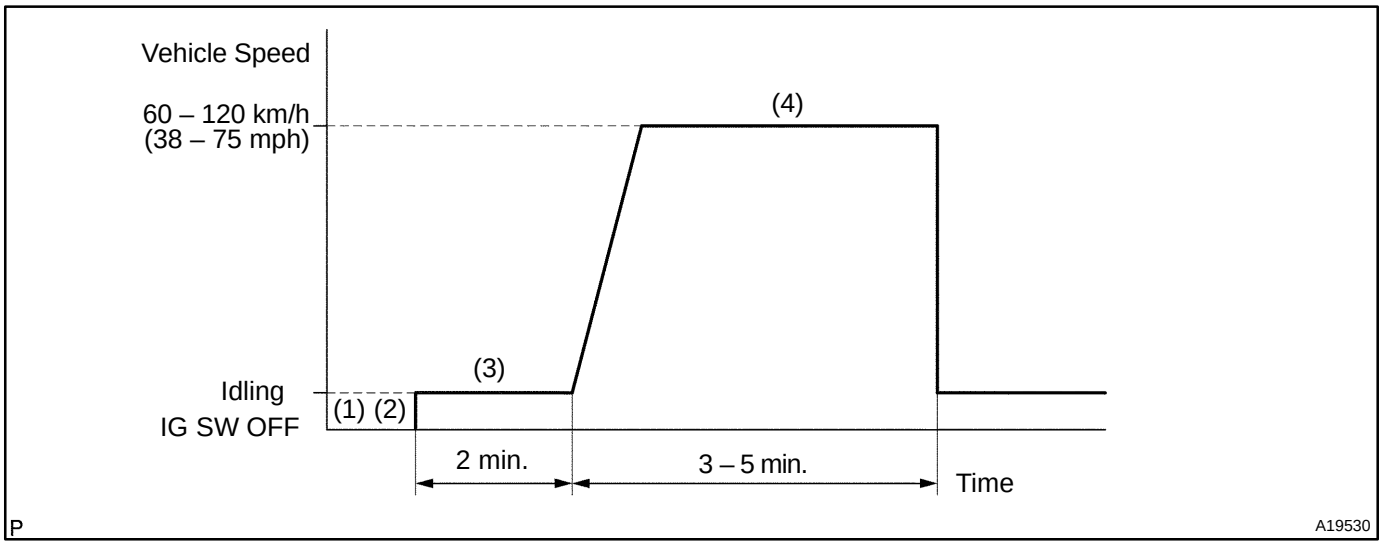

(a) Connect the hand–held tester to the DLC3.
(b) Switch the hand–held tester from the normal mode to the check mode (See page DI–218).
(c) Start the engine and warm it up for 2 min. with all the accessory switched OFF.
(d) Drive the vehicle at 60 – 120 km/h (38 – 75 mph) and the engine speed at 1,600 – 3,200 rpm for 3 – 5 min.

HINT:

If a malfunction exists, the MIL will light up during step (d).

NOTICE:

- **If the conditions in this test are not strictly followed, detection of the malfunction will not be possible.**
- **If you do not have a hand–held tester, turn the ignition switch OFF after performing steps (c) and (d), then perform steps (c) and (d) again.**

INSPECTION PROCEDURE

HINT:

Hand–held tester only:

The narrowing down the trouble area is possible by performing ACTIVE TEST of the following ”A/F CONTROL” (A/F sensor, heated oxygen sensor or another can be distinguished).

Perform ACTIVE TEST by hand–held tester (A/F CONTROL).

HINT:
"A/F CONTROL" is an ACTIVE TEST which change the injection volume to –12.5 % or +25 %.

(1) Connect the hand–held tester to the DLC3 on the vehicle.
(2) Turn the ignition switch ON.
(3) Warm up the engine with the engine speed at 2,500 rpm for approx. 90 sec.
(4) Select the item "DIAGNOSIS/ENHANCED OBD II/ACTIVE TEST/ A/F CONTROL".
(5) Perform "A/F CONTROL" when idle condition (press the ← or → button).

Result:

A/F sensor reacts in synchronizing with increase and decrease of injection volume (+25 % → rich output: Less than 3.0 V, –12.5 % → lean output: More than 3.35 V)

Heated oxygen sensor reacts in synchronizing with increase and decrease of injection volume (+25 % → rich output: More than 0.55 V, –12.5 % → lean output: Less than 0.4 V)

NOTICE:

However, there is a few second delay in the A/F sensor output. And there is about 20 seconds delay in the heated oxygen sensor.

	Output voltage of A/F sensor (sensor 1)	Output voltage of heated oxygen sensor (sensor 2)	Mainly suspect trouble area
Case 1	Injection volume +25 % –12.5 % Output voltage More than 3.35 V Less than 3.0 V **OK**	Injection volume +25 % –12.5 % Output voltage More than 0.55 V Less than 0.4 V **OK**	—
Case 2	Injection volume +25 % –12.5 % Output voltage No reaction **NG**	Injection volume +25 % –12.5 % Output voltage More than 0.55 V Less than 0.4 V **OK**	A/F sensor (A/F sensor, heater, A/F sensor circuit)
Case 3	Injection volume +25 % –12.5 % Output voltage More than 3.35 V Less than 3.0 V **OK**	Injection volume +25 % –12.5 % Output voltage No reaction **NG**	Heated oxygen sensor (heated oxygen sensor, heater, heated oxygen sensor circuit)
Case 4	Injection volume +25 % –12.5 % Output voltage No reaction **NG**	Injection volume +25 % –12.5 % Output voltage No reaction **NG**	Extremely rich or lean of the actual air–fuel ratio (Injector, fuel pressure, gas leakage in exhaust system, etc)

The following procedure of A/F CONTROL enable that to check its output (show its graph indication) of A/F sensor and heated oxygen sensor.

To display the graph indication. Select and push the "YES or NO" button 2 data "AFS B1S1 and O2S B1S2" or "AFS B2S1 and O2S B2S2" and press button "4" after selecting "ACTIVE TEST/ A/F CONTROL/USER DATA".

HINT:

- A low A/F sensor voltage could be caused by a rich air fuel mixture. Check for conditions that would cause the engine to run rich.
- A high A/F sensor voltage could be caused by a lean air fuel mixture. Check for conditions that would cause the engine to run lean.
- Read frame freeze data using the hand–held tester or the OBD II scan tool, as freeze frame data records the engine conditions when a malfunction is detected. When troubleshooting, it is useful for determining whether the vehicle was running or stopped, the engine was warmed up or not, the air–fuel ratio was lean or rich, etc. at the time of the malfunction.

1	**Are there any other codes (besides A/F sensor circuit DTC codes) being output?**

YES → **Go to relevant DTC chart (See page DI–231).**

NO

2	**Connect OBD II scan tool or Hand–held tester, and read value for voltage output of A/F sensor (bank 1 sensor 1).**

PREPARATION:

(a) Connect the hand–held tester or the OBD II scan tool to the DLC 3.
(b) Warm up the A/F sensor (bank 1 sensor 1) with the engine at 2,500 rpm for approximately 90 seconds.
(c) Read A/F sensor voltage on the OBD II scan tool or hand–held tester.

CHECK:

(a) Hand–held tester only:
Select the ”DIAGNOSIS/ENHANCED OBD II/SNAPSHOT/MANUAL SNAPSHOT/USER DATA” mode on the hand–held tester.
(b) Select ”AFS B1 S1/ENGINE SPD” and press button ”YES”.
(c) Monitor the A/F sensor voltage carefully.
(d) Check the A/F sensor voltage under the condition as follows.
(1) Allow engine to idle for 30 seconds.
(2) Engine is racing at approx. 2,500 rpm (when engine revolution is not suddenly changed).
(3) Raise the engine speed to 4,000 rpm and release the accelerator pedal fully closed quickly.

OK:

Standard:
Condition (1) and (2)
Voltage change a little in the vicinity of 3.3 V (0.66 V)* (between approx. 3.1 – 3.5 V) as shown in the illustration.
Condition (3)
A/F ratio sensor voltage increase to 3.8 V (0.76 V)* or more during engine deceleration (when fuel cut) as shown in the illustration.

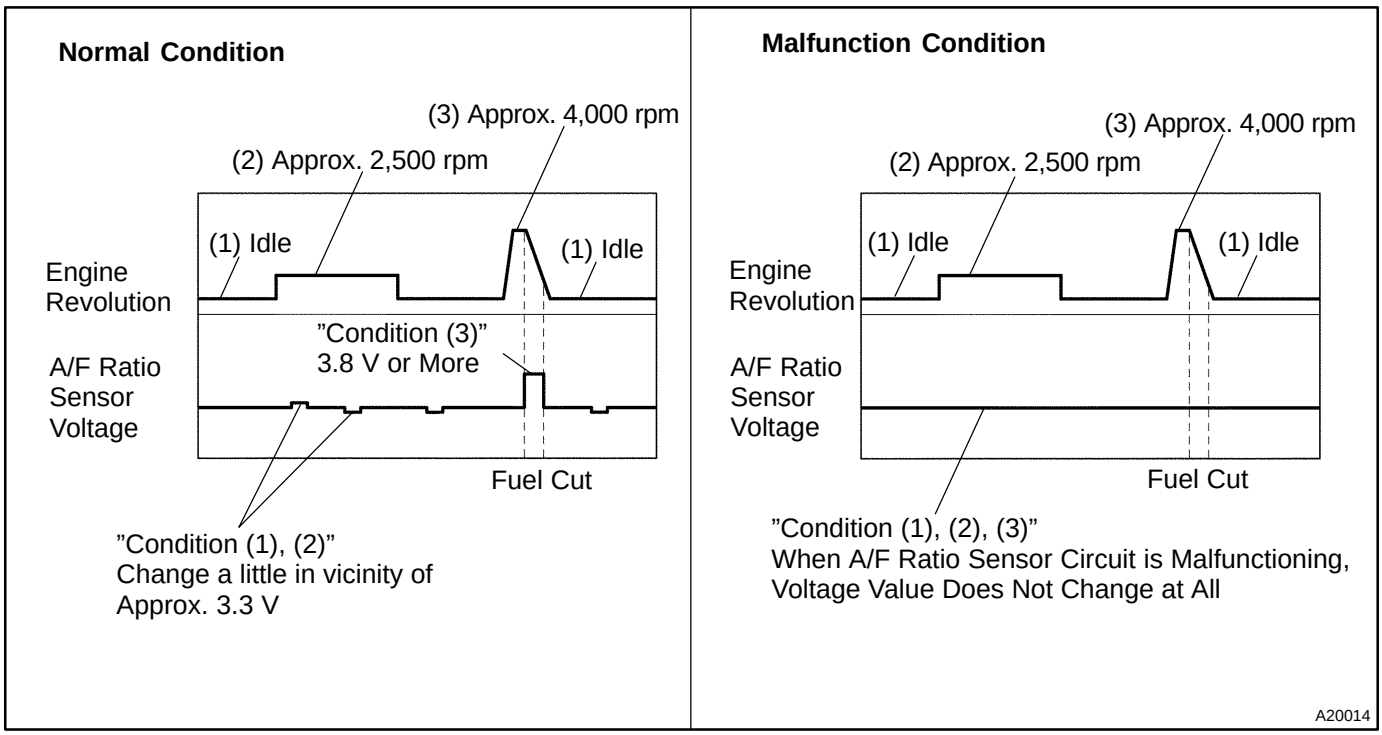

HINT:

- Whenever the output voltage of the A/F sensor remains at approx. 3.3 V (0.660 V)* (see dwg. 2) under any conditions as well as the above conditions, the A/F sensor may have an open–circuit. (This will happen also when the A/F sensor heater has an open–circuit.)
- Whenever the output voltage of the A/F sensor remains at a certain value of approx. 3.8 V (0.76 V)* or more, or 2.8 V (0.56 V)* or less (see dwg. 2) under any conditions as well as the above conditions, the A/F sensor may have a short–circuit.
- The ECM will stop fuel injection (fuel cut) during engine deceleration. This will cause a lean condition and should result in a momentary increase in A/F ratio sensor voltage.
- The ECM must establish a closed throttle position learned value to perform fuel cut. If the battery terminal has been disconnected, the vehicle must be driven over 10 mph to allow the ECM to relearn the closed throttle position.
- When the vehicle is driven:
  In the case that the output voltage of the A/F sensor is below 2.8 V (0.76 V)* during fuel enrichment (for example, when the vehicle tries to overtake another vehicle on a highway, the vehicle speed is suddenly increased with the accelerator pedal fully depressed), the A/F sensor are functioning normally.
- The A/F sensor is a current output element, and therefore the current is converted into voltage inside the ECM. If measuring voltage at connectors of A/F ratio sensor or ECM, you can obtain a constant voltage.

*: When using the OBD II scan tool (excluding hand–held tester).

OK	**Go to step 13.**

NG

3	Check resistance of A/F sensor heater.

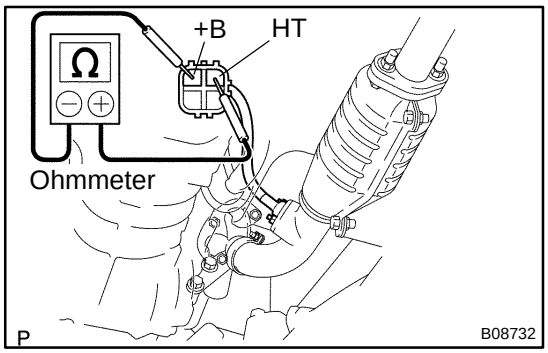

PREPARATION:
Disconnect the sensor connector.
CHECK:
Using an ohmmeter, measure the resistance between terminals +B and HT.
OK:

at 20°C (68°F)	0.8 – 1.4 Ω
at 800°C (1,472°F)	1.8 – 3.2 Ω

NG → **Replace A/F sensor.**

OK

4	Check EFI main relay (Marking: EFI).

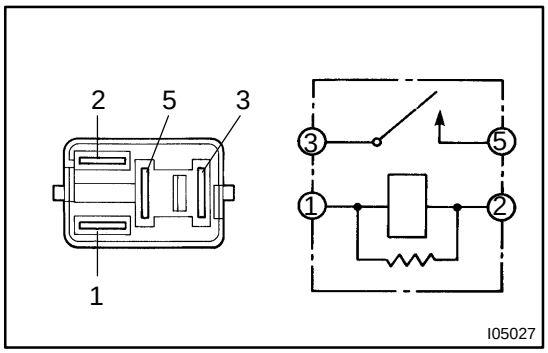

PREPARATION:
Remove the EFI main relay from RB No. 2.
CHECK:
Inspect the EFI main relay.
OK:

Condition	Tester connection	Specified condition
Constant	1 – 2	Continuity
	3 – 5	No continuity
Apply B+ between terminals 1 and 2.	3 – 5	Continuity

NG → **Replace EFI main relay**

OK

5	Check for open and short in harness and connector between ECM and A/F sensor (See page IN–28).

NG → **Repair or replace harness or connector.**

OK

6	Check air induction system (See page SF–1).

NG → Repair or replace.

OK

7	Check fuel pressure (See page SF–5).

NG → Check and repair fuel pump, pressure regulator, fuel pipe line and filter (See page SF–1).

OK

8	Check injector injection (See page SF–19).

NG → Replace injector.

OK

9	Replace A/F sensor.

GO

10	Perform confirmation driving pattern.

GO

11	Are there A/F sensor circuit DTC codes being output again?

YES → Check and replace ECM (See page IN–28).

NO

12	Did vehicle run out of fuel in past?

NO → Check for intermittent problems (See page DI–218).

YES

A/F sensor circuit DTC codes are caused by shortage of fuel.

13	Perform confirmation driving pattern.

GO

14	Are there A/F sensor circuit DTC codes being output again ?

NO → Go to step 18.

YES

15	Replace A/F sensor.

GO

16	Perform confirmation driving pattern.

GO

17	Are there A/F sensor circuit DTC codes being output again ?

YES → Check and replace ECM (See page IN–28).

NO

18	Did vehicle run out of fuel in the past ?

NO → Check for intermittent problems (See page DI–218).

YES

A/F sensor circuit DTC codes is caused by shortage of fuel.

DIB28–01

DTC	P2237	Oxygen Sensor Pumping Current Circuit / Open (for A/F sensor) (Bank 1 Sensor 1)

DTC	P2238	Oxygen Sensor Pumping Current Circuit / Low (for A/F sensor) (Bank 1 Sensor 1)

DTC	P2239	Oxygen Sensor Pumping Current Circuit / High (for A/F sensor) (Bank 1 Sensor 1)

CIRCUIT DESCRIPTION

HINT:
This DTC is related to A/F sensor, although the caption is oxygen sensor.
Refer to DTC P2195 and P2196 on page DI–421.

DTC No.	DTC Detection Condition	Trouble Area
P2237	A/F sensor circuit (bank 1 sensor 1)	HINT: Main trouble area • Open or short in A/F sensor circuit
	Condition (a) and (b) continues for 5.0 sec. or more: (a) AF+ ≦ 0.5 V (b) AF+ > 4.5 V	• Open or short in A/F sensor circuit • A/F sensor • A/F sensor heater • EFI main relay
	Condition (a) and (b) continues for 5.0 sec. or more: (a) (AF+) – (AF–) ≦ 0.1 V (b) (AF+) – (AF–) > 0.8 V	
P2238	A/F sensor circuit low (bank 1 sensor 1)	HINT: Main trouble area • Open in A/F sensor circuit
	Condition (a) continues for 5.0 sec. or more: (a) AF+ ≦ 0.5 V	• Open in A/F sensor circuit • A/F sensor • A/F sensor heater • EFI main relay
	Condition (a) continues for 5.0 sec. or more: (a) (AF+) – (AF–) ≦ 0.1 V	
P2239	A/F sensor circuit high (bank 1 sensor 1)	HINT: Main trouble area • Short in A/F sensor circuit
	Condition (a) continues for 5.0 sec. or more: (a) AF+ > 4.5 V	• Short in A/F sensor circuit • A/F sensor • A/F sensor heater • EFI main relay
	Condition (a) continues for 5.0 sec. or more: (a) (AF+ – AF–) > 0.8 V	

WIRING DIAGRAM

Refer to DTC P0134 on page DI–278.

INSPECTION PROCEDURE

HINT:

Hand–held tester only:

The narrowing down the trouble area is possible by performing ACTIVE TEST of the following ”A/F CONTROL” (A/F sensor, heated oxygen sensor or another can be distinguished).

Perform ACTIVE TEST by hand–held tester (A/F CONTROL).

HINT:

”A/F CONTROL” is an ACTIVE TEST which change the injection volume to –12.5 % or +25 %.

(1) Connect the hand–held tester to the DLC3 on the vehicle.
(2) Turn the ignition switch ON.
(3) Warm up the engine with the engine speed at 2,500 rpm for approx. 90 sec.
(4) Select the item ”DIAGNOSIS/ENHANCED OBD II/ACTIVE TEST/ A/F CONTROL”.
(5) Perform ”A/F CONTROL” when idle condition (press the ← or → button).

Result:

A/F sensor reacts in synchronizing with increase and decrease of injection volume (+25 % → rich output: Less than 3.0 V, –12.5 % → lean output: More than 3.35 V)

Heated oxygen sensor reacts in synchronizing with increase and decrease of injection volume (+25 % → rich output: More than 0.55 V, –12.5 % → lean output: Less than 0.4 V)

NOTICE:

However, there is a few second delay in the A/F sensor output. And there is about 20 seconds delay in the heated oxygen sensor.

	Output voltage of A/F sensor (sensor 1)	Output voltage of heated oxygen sensor (sensor 2)	Mainly suspect trouble area
Case 1	Injection volume +25 % –12.5 % Output voltage More than 3.35 V Less than 3.0 V **OK**	Injection volume +25 % –12.5 % Output voltage More than 0.55 V Less than 0.4 V **OK**	—
Case 2	Injection volume +25 % –12.5 % Output voltage No reaction **NG**	Injection volume +25 % –12.5 % Output voltage More than 0.55 V Less than 0.4 V **OK**	A/F sensor (A/F sensor, heater, A/F sensor circuit)
Case 3	Injection volume +25 % –12.5 % Output voltage More than 3.35 V Less than 3.0 V **OK**	Injection volume +25 % –12.5 % Output voltage No reaction **NG**	Heated oxygen sensor (heated oxygen sensor, heater, heated oxygen sensor circuit)
Case 4	Injection volume +25 % –12.5 % Output voltage No reaction **NG**	Injection volume +25 % –12.5 % Output voltage No reaction **NG**	Extremely rich or lean of the actual air–fuel ratio (Injector, fuel pressure, gas leakage in exhaust system, etc)

The following procedure of A/F CONTROL enable that to check its output (show its graph indication) of A/F sensor and heated oxygen sensor.
To display the graph indication. Select and push the ”YES or NO” button 2 data ”AFS B1S1 and O2S B1S2” or ”AFS B2S1 and O2S B2S2” and press button ”4” after selecting ”ACTIVE TEST/ A/F CONTROL/USER DATA”.
HINT:
Read frame freeze data using the hand–held tester or OBD II scan tool, as freeze frame data records the engine conditions when a malfunction is detected. When troubleshooting, it is useful for determining whether the vehicle was running or stopped, the engine was warmed up or not, the air–fuel ratio was lean or rich, etc. at the time of the malfunction.

1	Check resistance of A/F sensor heater.

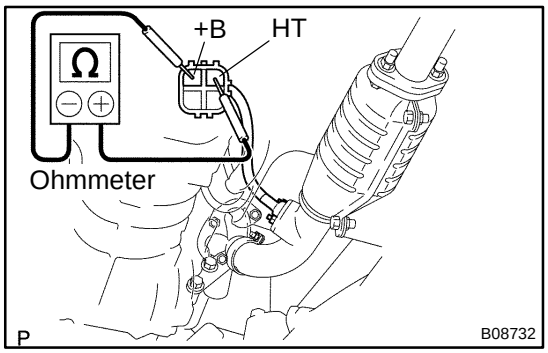

PREPARATION:
Disconnect the sensor connector.
CHECK:
Using an ohmmeter, measure the resistance between terminals +B and HT.
OK:

at 20˚C (68˚F)	0.8 – 1.4 Ω
at 800˚C (1,472˚F)	1.8 – 3.2 Ω

NG → **Replace A/F sensor.**

OK

2	Check EFI main relay (Marking: EFI).

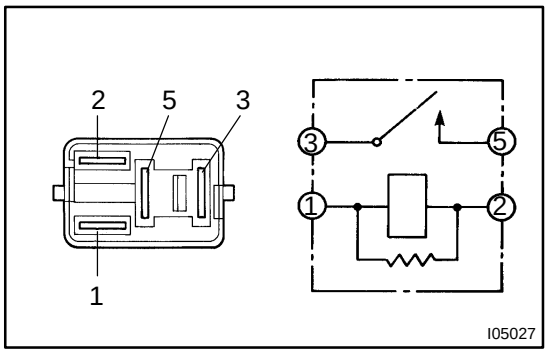

PREPARATION:
Remove the EFI main relay from RB No. 2.
CHECK:
Inspect the EFI main relay.
OK:

Condition	Tester connection	Specified condition
Constant	1 – 2	Continuity
	3 – 5	No continuity
Apply B+ between terminals 1 and 2.	3 – 5	Continuity

NG → **Replace EFI main relay**

OK

3	**Check for open and short in harness and connector between ECM and A/F sensor (See page IN–28).**

NG → **Repair or replace harness or connector.**

OK

Replace A/F sensor.

DIB1R–01

DTC	P0120	Throttle Pedal position Sensor/Switch ”A” Circuit (w/o ETCS)

DTC	P0122	Throttle Pedal position Sensor/Switch ”A” Low Input (w/o ETCS)

DTC	P0123	Throttle Pedal position Sensor/Switch ”A” High Input (w/o ETCS)

CIRCUIT DESCRIPTION

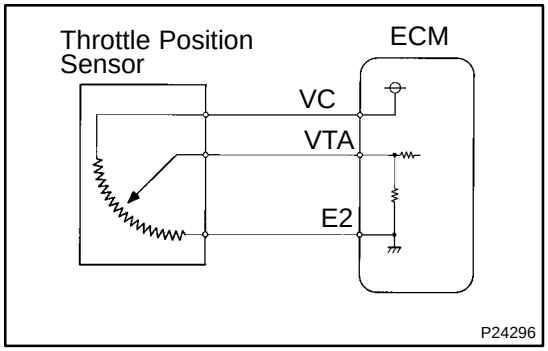

HINT:
This is the procedure of throttle position sensor (w/o ETCS).
The throttle position sensor is mounted in the throttle body and detects the throttle valve opening angle. When the throttle valve is fully closed, a voltage of approximately 0.3 – 1.0 V is applied to terminal VTA of the ECM. The voltage applied to terminals VTA of the ECM increases in proportion to the opening angle of the throttle valve and becomes approximately 2.7 – 5.2 V when the throttle valve is fully opened. The ECM judges the vehicle driving conditions these signals input from terminals VTA and uses them as one of the conditions to decide the air–fuel ratio correction, power increase correction and fuel–cut control, etc.

DTC No.	DTC Detection Condition	Trouble Area
P0120	Condition (a) or (b) continues: (a) VTA < 0.1 V (b) VTA > 4.9 V	• Open or short in throttle position sensor circuit • Throttle position sensor • Wire harness • ECM
P0122	(a) VTA < 0.1 V	
P0123	(b) VTA > 4.9 V	

HINT:
After confirming DTC P0120, P0122, P0123 use the hand–held tester or the OBD II scan tool to confirm the throttle valve opening percentage and closed throttle position switch condition.

Throttle valve opening position expressed as percentage		Trouble Area
Throttle valve fully closed	Throttle valve fully open	
0 %	0 %	• VC circuit open • VTA circuit open or short
Approx. 100 %	Approx. 100 %	• E2 circuit open

WIRING DIAGRAM

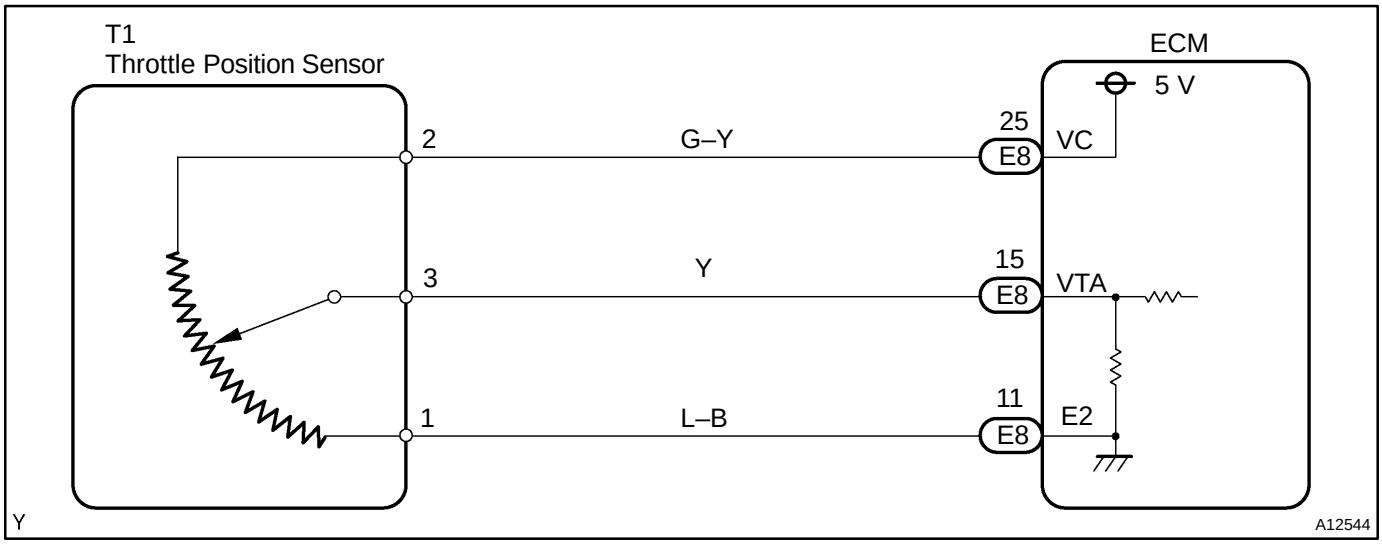

INSPECTION PROCEDURE

HINT:

- If different DTCs that are related to different systems are output simultaneously while terminal E2 is used as a ground terminal, terminal E2 may be open.
- Read freeze frame data using the hand–held tester or the OBD II scan tool, as freeze frame data records the engine conditions when a malfunction is detected. When troubleshooting, it is useful for determining whether the vehicle was running or stopped, the engine was warmed up or not, the air–fuel ratio was lean or rich, etc. at the time of the malfunction.

1	**Connect hand–held tester or OBD II scan tool, and read throttle valve opening percentage.**

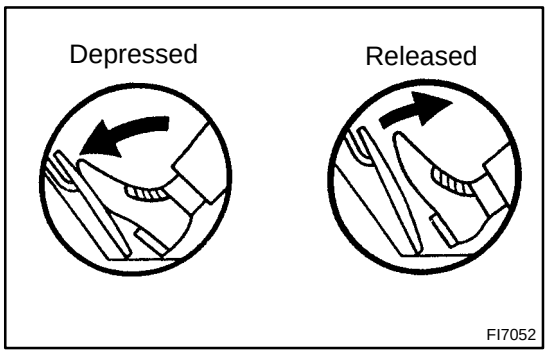

PREPARATION:

(a) Connect the hand–held tester or the OBD II scan tool to the DLC3.

(b) Turn the ignition switch ON and push the hand–held tester or the OBD II scan tool main switch ON.

CHECK:

Read the throttle valve opening percentage.

OK:

Accelerator pedal (Throttle valve)	Throttle valve opening position expressed as percentage
Fully Release (Fully open)	Approx. 75 %
Fully depress (Fully closed)	Approx. 10 %

OK → **Check for intermittent problems (See page DI–218).**

NG

2	**Check voltage between terminal 2 of throttle position sensor connector and body ground.**

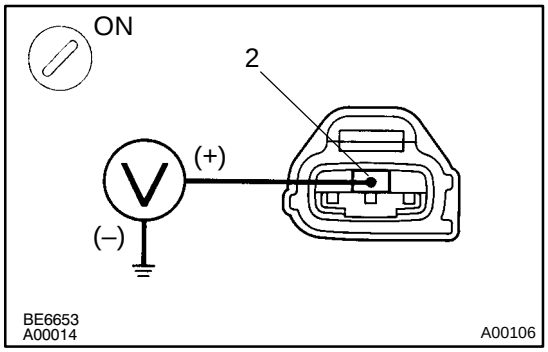

PREPARATION:

(a) Disconnect the throttle position sensor connector.

(b) Turn the ignition switch ON.

CHECK:

Measure the voltage between terminal 2 of the throttle position sensor connector and the body ground.

OK:

Voltage: 4.5 – 5.5 V

NG	**Go to step 5.**

OK

3	**Check throttle position sensor (See page SF–33).**

NG	**Replace throttle position sensor.**

OK

4	**Check voltage between terminals VTA and E2 of ECM connector.**

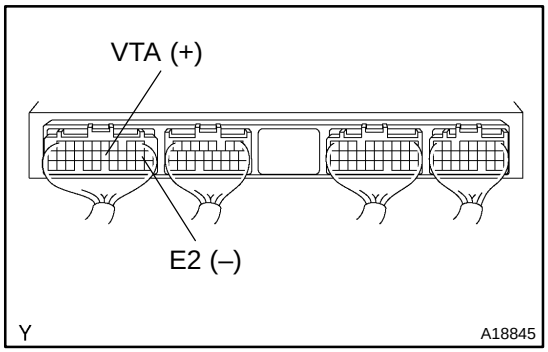

PREPARATION:

(a) Remove the glove compartment (See page SF–63).

(b) Turn the ignition switch ON.

CHECK:

Measure the voltage between terminals VTA and E2 of the ECM connector.

OK:

Accelerator pedal (Throttle valve)	Voltage
Fully depress (Fully closed)	0.3 – 1.0 V
Fully Release (Fully open)	2.7 – 5.2 V

NG	**Check for open and short in harness and connector in VTA circuit between ECM and throttle position sensor (See page IN–28).**

OK

Check and replace ECM (See page IN–28).

5	**Check voltage between terminals VC and E2 of ECM of connector.**

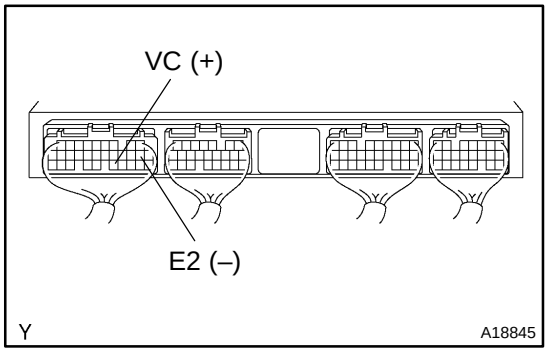

PREPARATION:

(a) Remove the glove compartment (See page SF–63).

(b) Turn the ignition switch ON.

CHECK:

Measure the voltage between terminals VC and E2 of the ECM connector.

OK:

Voltage: 4.5 – 5.5 V

NG → **Check and replace ECM (See page IN–28).**

OK

Check for open in harness and connector in VC circuit between ECM and throttle position sensor (See page IN–28).

DIB1Y–01

DTC	P0505	Idle Air Control System (w/o ETCS)

DTC	P0511	Idle Air Control Circuit (w/o ETCS)

CIRCUIT DESCRIPTION

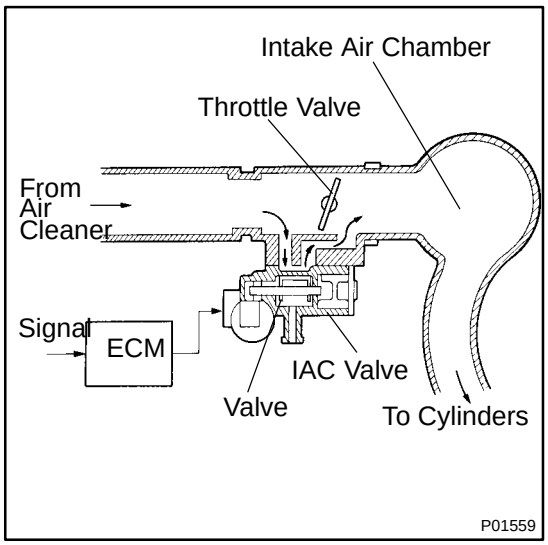

The rotary solenoid type IAC valve is located in front of the intake air chamber and intake air bypassing the throttle valve is directed to the IAC valve through a passage.
In this way, the intake air volume bypassing the throttle valve is regulated, controlling the engine speed.
The ECM operates only the IAC valve to perform idle–up and provide feedback for the target idling speed.

DTC No.	DTC Detection Condition	Trouble Area
P0505 P0511	Idle speed continues to vary greatly from target speed (2 trip detection logic)	• PCV hose connection • PCV hose • Open or short in IAC valve circuit • IAC valve is stuck or closed • Open or short in A/C signal circuit • Air induction system • ECM

WIRING DIAGRAM

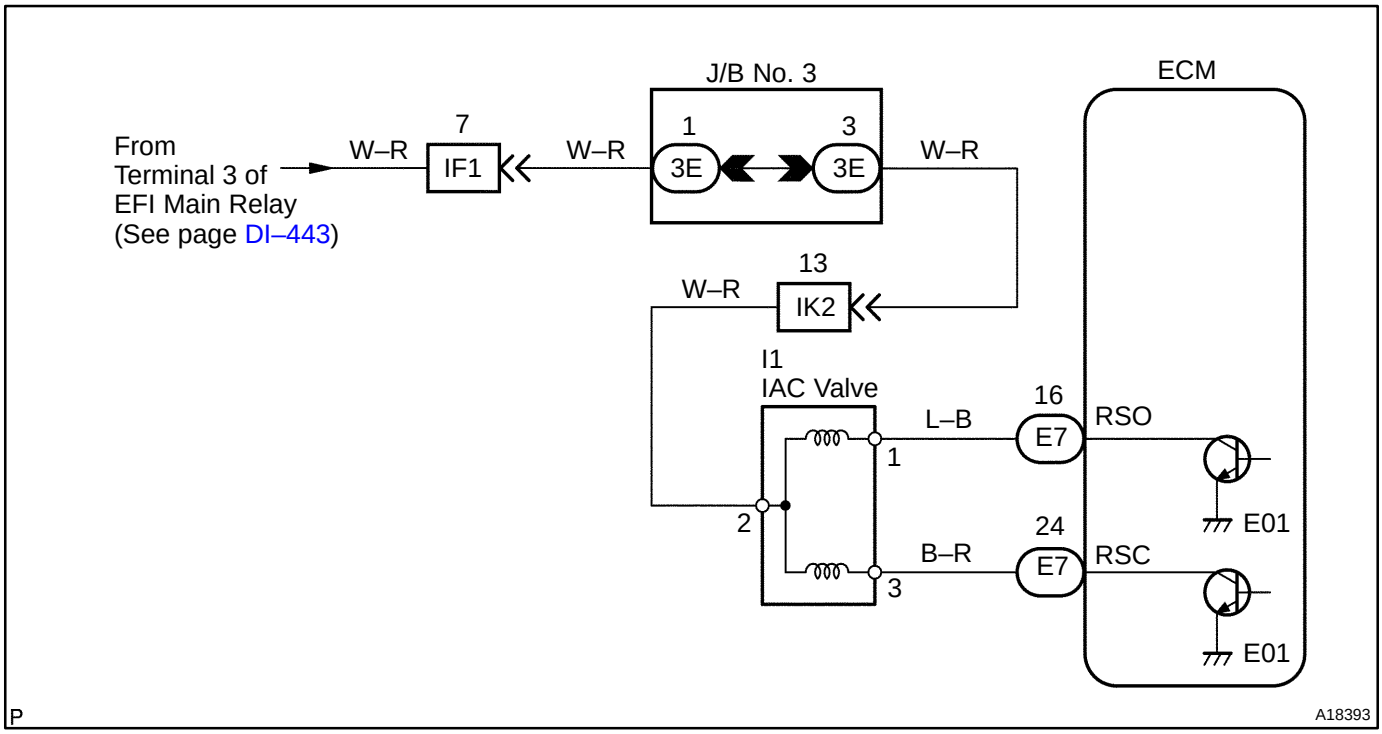

INSPECTION PROCEDURE

HINT:

- In case of using the hand–held tester, start the inspection from step 1 and in case of not using the hand–held tester, start from step 2.
- Read freeze frame data using the hand–held tester or the OBD II scan tool, as freeze frame data records the engine conditions when a malfunction is detected. When troubleshooting, it is useful for determining whether the vehicle was running or stopped, the engine was warmed up or not, the air–fuel ratio was lean or rich, etc. at the time of the malfunction.

1	**Check idle speed.**

PREPARATION:

(a) Warm up the engine to normal operating temperature.
(b) Switch off all the accessories.
(c) Switch off the A/C.
(d) Shift the transmission into the N or neutral position.
(e) Connect the hand–held tester or OBD II scan tool to the DLC3 on the vehicle.
(f) Select the ACTIVE TEST mode on the hand–held tester.

CHECK:

Check the engine speed when the ISC valve is operated by hand–held tester.

OK:

Engine speed increases and decreases in response to the change of ISC duty ratio.

NG → **Go to step 5.**

OK

2	**Check air induction system (See page SF–1).**

NG → **Repair or replace.**

OK

3	**Check connection of PCV hose.**

NG → **Repair or replace PCV hose.**

OK

4	**Check A/C signal circuit (See page AC–14).**

NG → **Repair or replace.**

OK

5	**Check voltage terminals RSO, RSC of ECM connector and body ground.**

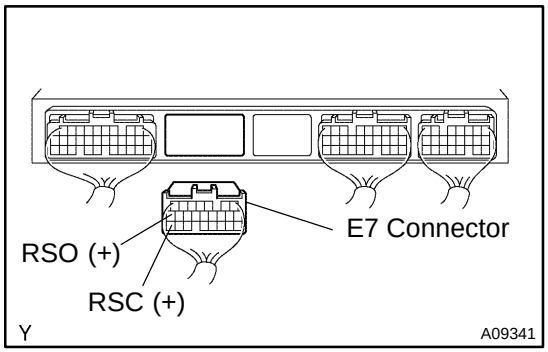

PREPARATION:

(a) Remove the glove compartment (See page SF–64).
(b) Disconnect the E7 connector from the ECM.
(c) Turn the ignition switch ON.

CHECK:

Measure the voltage between terminals RSO, RSC of the ECM connector and the body ground.

OK:

Voltage: 9 – 14 V

OK → **Go to step 7.**

NG

6	Check IAC valve (See page SF–39).

NG → Replace IAC valve.

OK

Check for open and short in harness and connector between EFI main relay (Marking: EFI) and IAC valve, and IAC valve and ECM (See page IN–28).

7	Check operation of IAC valve (See page SF–43).

NG → Repair or replace IAC valve.

OK

8	Check operation of IAC valve and passage to bypass throttle valve.

NG → Repair or replace IAC valve.

OK

Check and replace ECM (See page IN–28).

DI0RR–16

DTC	P0101	Mass or Volume Air Flow Circuit Range/ Performance Problem

CIRCUIT DESCRIPTION

Refer to DTC P0100 on page DI–249.

DTC No.	DTC Detection Condition	Trouble Area
P0101	After engine is warmed up, conditions (a), (b) and (c) continue with engine speed at 900 rpm or less: (2 trip detection logic) (a) Throttle valve fully closed (b) Mass air flow meter output > 2.2 V (c) THW ≧ 70°C	• Mass air flow meter
	Conditions (a) and (b) continue with engine speed at 1,500 rpm or more: (2 trip detection logic) (a) VTA ≧ 0.1 V (b) Mass air flow meter output < 0.25 V	

INSPECTION PROCEDURE

HINT:

Read freeze frame data using the hand–held tester or the OBD II scan tool, as freeze frame data records the engine conditions when a malfunction is detected. When troubleshooting, it is useful for determining whether the vehicle was running or stopped, the engine was warmed up or not, the air–fuel ratio was lean or rich, etc. at the time of the malfunction.

1	Are there any other codes (besides DTC P0101) being output?

NO → Replace mass air flow meter.

YES →

Go to relevant DTC chart (See page DI–231).

DTC	P0121	Throttle Pedal Position Sensor/Switch ”A” Circuit Range/Performance Problem

CIRCUIT DESCRIPTION

- Refer to DTC P0120 (w/ ETCS) on page DI–265.
- Refer to DTC P0120 (w/o ETCS) on page DI–272.

HINT:

This is the procedure of throttle position sesor.

DTC No.	DTC Detection Condition	Trouble Area
P0121 (w/ ETSC)	Condition (a) continues for 2.0 seconds: (a) Difference between VTA and VTA2 is out of threshold	• Throttle position sensor
P0121 (w/o ETSC)	While vehicle speed drops from 30 km/h (19 mph) or more to 0 km/h (0 mph), output value of throttle position sensor is out of applicable range (2 trip detection logic)	• Throttle position sensor

INSPECTION PROCEDURE

HINT:

Read freeze frame data using the hand–held tester or the OBD II scan tool, as freeze frame data records the conditions when a malfunction is detected. When troubleshooting, it is useful for determining whether the vehicle was running or stopped, the engine was warmed up or not, the air–fuel ratio was lean or rich, etc. at the time of the malfunction.

1	Are there any other codes (besides DTC P0121) being output?

YES → Go to relevant DTC chart (See page DI–231).

NO →

Replace throttle position sensor.

DI6I2–13

DTC	P0128	Coolant Thermostat (Coolant Temperature Below Thermostat Regulating Temperature)

CIRCUIT DESCRIPTION

HINT:

This is the troubleshooting procedure of thermostat.

If the engine coolant temperature does not reach 75°C (167°F) even after warming up, it is abnormal.

DTC No.	DTC Detection Condition	Trouble Area
P0128	Conditions (a), (b) and (c): (a) Cold start (b) After engine is warmed up (c) Engine coolant temp. < 75°C (167°F)	• Thermostat • Cooling system • Engine coolant temp. sensor • ECM

INSPECTION PROCEDURE

HINT:

Read freeze frame data using the hand–held tester or the OBD II scan tool, as freeze frame data records the engine conditions when a malfunction is detected. When troubleshooting, it is useful for determining whether the vehicle was running or stopped, the engine was warmed up or not, the air–fuel ratio was lean or rich, etc. at the time of the malfunction.

1	**Check thermostat (See page CO–11).**

NG → **Replace thermostat (See page CO–10).**

OK

2	**Are there any other codes (besides DTC P0128) being output?**

YES → **Go to relevant DTC chart (See page DI–231).**

NO

Check and replace ECM (See page IN–28).

DIB1S–01

DTC	P0134	Oxygen (A/F) Sensor Circuit No Activity Detected (Bank 1 Sensor 1)

CIRCUIT DESCRIPTION

Refer to DTC P2195 on page DI–421.
HINT:
This DTC is related to A/F sensor, although the caption is oxygen sensor.

DTC No.	DTC Detection Condition	Trouble Area
P0134	After engine is warmed up, A/F sensor output* does not change when conditions (a), (b), (c) and (d) continue for at least 1.5 min.: *: Output value changes at inside of ECM only (a) Engine speed: 1,500 rpm or more (b) Vehicle speed: 40 – 140 km/h (25 – 87 mph) (c) Throttle valve is not fully closed (d) After starting engine ≧ 140 sec.	• Open or short in A/F sensor (bank 1 sensor 1) circuit • A/F sensor (bank 1 sensor 1) • A/F sensor heater • EFI main relay • A/F sensor heater and relay circuit • Air induction system • Fuel pressure • Injector • Gas leak in exhaust system • PCV hose connection • PCV valve and hose • ECM

HINT:

- Sensor 1 refers to the sensor closest to the engine body.
- Sensor 2 refers to the sensor farthest from the engine body.
- After confirming DTC P0134, use the OBD II scan tool or the hand−held tester to confirm output voltage of the A/F sensor (bank 1 sensor 1) from the ”DIAGNOSIS/ENHANCED OBD II/DATA LIST/ALL”.
- The ECM controls the voltage of AF1+ and AF1– terminals of the ECM to the fixed voltage. Therefore it is impossible to confirm the A/F sensor output voltage without the OBD II scan tool or the hand–held tester.
- OBD II scan tool (excluding hand–held tester) displays the one fifth of the A/F sensor output voltage which is displayed on the hand–held tester.

WIRING DIAGRAM

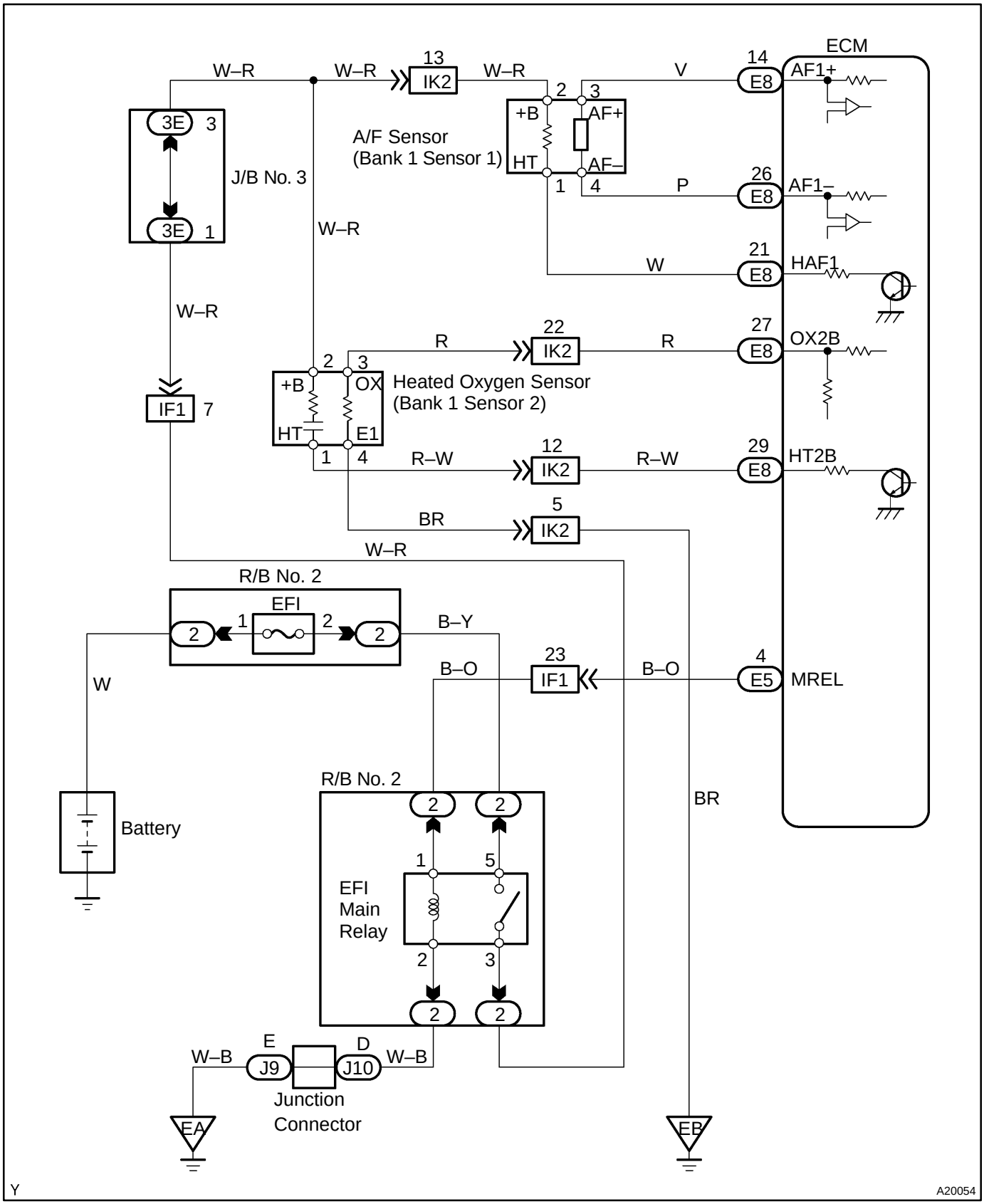

CONFIMATION DRIVING PATTERN

Refer to DTC P2195 on page DI–421

INSPECTION PROCEDURE

HINT:

Hand–held tester only:

The narrowing down the trouble area is possible by performing ACTIVE TEST of the following ”A/F CONTROL” (A/F sensor, heated oxygen sensor or another can be distinguished).

Perform ACTIVE TEST by hand–held tester (A/F CONTROL).

HINT:

”A/F CONTROL” is an ACTIVE TEST which change the injection volume to –12.5 % or +25 %.

(1) Connect the hand–held tester to the DLC3 on the vehicle.
(2) Turn the ignition switch ON.
(3) Warm up the engine with the engine speed at 2,500 rpm for approx. 90 sec.
(4) Select the item ”DIAGNOSIS/ENHANCED OBD II/ACTIVE TEST/ A/F CONTROL”.
(5) Perform ”A/F CONTROL” when idle condition (press the ← or → button).

Result:

A/F sensor reacts in synchronizing with increase and decrease of injection volume (+25 % → rich output: Less than 3.0 V, –12.5 % → lean output: More than 3.35 V)

Heated oxygen sensor reacts in synchronizing with increase and decrease of injection volume (+25 % → rich output: More than 0.55 V, –12.5 % → lean output: Less than 0.4 V)

NOTICE:

However, there is a few second delay in the A/F sensor output. And there is about 20 seconds delay in the heated oxygen sensor.

	Output voltage of A/F sensor (sensor 1)	Output voltage of heated oxygen sensor (sensor 2)	Mainly suspect trouble area
Case 1	Injection volume +25 % –12.5 % Output voltage More than 3.35 V Less than 3.0 V **OK**	Injection volume +25 % –12.5 % Output voltage More than 0.55 V Less than 0.4 V **OK**	—
Case 2	Injection volume +25 % –12.5 % Output voltage No reaction **NG**	Injection volume +25 % –12.5 % Output voltage More than 0.55 V Less than 0.4 V **OK**	A/F sensor (A/F sensor, heater, A/F sensor circuit)
Case 3	Injection volume +25 % –12.5 % Output voltage More than 3.35 V Less than 3.0 V **OK**	Injection volume +25 % –12.5 % Output voltage No reaction **NG**	Heated oxygen sensor (heated oxygen sensor, heater, heated oxygen sensor circuit)
Case 4	Injection volume +25 % –12.5 % Output voltage No reaction **NG**	Injection volume +25 % –12.5 % Output voltage No reaction **NG**	Extremely rich or lean of the actual air–fuel ratio (Injector, fuel pressure, gas leakage in exhaust system, etc)

The following procedure of A/F CONTROL enable that to check its output (show its graph indication) of A/F sensor and heated oxygen sensor.
To display the graph indication. Select and push the ”YES or NO” button 2 data ”AFS B1S1 and O2S B1S2” or ”AFS B2S1 and O2S B2S2” and press button ”4” after selecting ”ACTIVE TEST/ A/F CONTROL/USER DATA”.
HINT:

- If the vehicle runs out of fuel, the air–fuel ratio is LEAN and DTC P0134 is recorded. The MIL then comes on.
- A low A/F sensor voltage could be caused by a rich air fuel mixture. Check for conditions that would cause the engine to run rich.
- A high A/F sensor voltage could be caused by a lean air fuel mixture. Check for conditions that would cause the engine to run lean.
- Read freeze frame data using the hand–held tester or the OBD II scan tool, as freeze frame data records the engine conditions when a malfunction is detected. When troubleshooting, it is useful for determining whether the vehicle was running or stopped, the engine was warmed up or not, the air–fuel ratio was lean or rich, etc. at the time of the malfunction.

1	**Are there any other codes (besides DTC P0134) being output?**

YES → **Go to relevant DTC chart. (See page DI–231)**

NO

2	**Connect OBD II scan tool or Hand–held tester, and read value for voltage output of A/F sensor (bank 1 sensor 1).**

PREPARATION:

(a) Connect the hand–held tester or the OBD II scan tool to the DLC 3.
(b) Warm up the A/F sensor (bank 1 sensor 1) with the engine at 2,500 rpm for approximately 90 seconds.
(c) Read A/F sensor voltage on the OBD II scan tool or hand–held tester.

CHECK:

(a) Hand–held tester only:
Select the ”DIAGNOSIS/ENHANCED OBD II/SNAPSHOT/MANUAL SNAPSHOT/USER DATA” mode on the hand–held tester.
(b) Select ”AFS B1 S1/ENGINE SPD” and press button ”YES”.
(c) Monitor the A/F sensor voltage carefully.
(d) Check the A/F sensor voltage under the condition as follows.
(1) Allow engine to idle for 30 seconds.
(2) Engine is racing at approx. 2,500 rpm (when engine revolution is not suddenly changed).
(3) Raise the engine speed to 4,000 rpm and release the accelerator pedal fully closed quickly.

OK:

Standard:
Condition (1) and (2)
Voltage change a little in the vicinity of 3.3 V (0.66 V)* (between approx. 3.1 – 3.5 V) as shown in the illustration.
Condition (3)
A/F ratio sensor voltage increase to 3.8 V (0.76 V)* or more during engine deceleration (when fuel cut) as shown in the illustration.

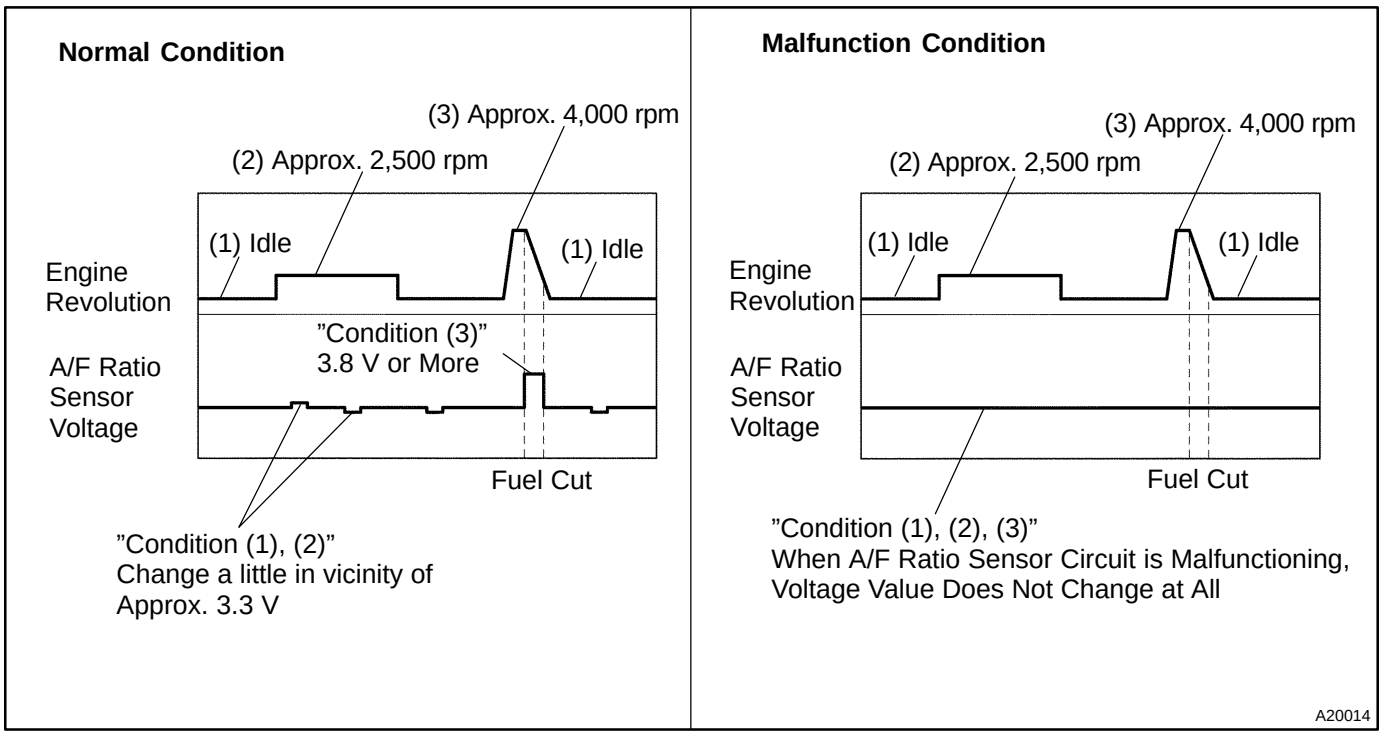

HINT:

- Whenever the output voltage of the A/F sensor remains at approx. 3.3 V (0.660 V)* (see dwg. 2) under any conditions as well as the above conditions, the A/F sensor may have an open–circuit. (This will happen also when the A/F sensor heater has an open–circuit.)
- Whenever the output voltage of the A/F sensor remains at a certain value of approx. 3.8 V (0.76 V)* or more, or 2.8 V (0.56 V)* or less (see dwg. 2) under any conditions as well as the above conditions, the A/F sensor may have a short–circuit.
- The ECM will stop fuel injection (fuel cut) during engine deceleration. This will cause a lean condition and should result in a momentary increase in A/F ratio sensor voltage.
- The ECM must establish a closed throttle position learned value to perform fuel cut. If the battery terminal has been disconnected, the vehicle must be driven over 10 mph to allow the ECM to relearn the closed throttle position.
- When the vehicle is driven:
  In the case that the output voltage of the A/F sensor is below 2.8 V (0.76 V)* during fuel enrichment (for example, when the vehicle tries to overtake another vehicle on a highway, the vehicle speed is suddenly increased with the accelerator pedal fully depressed), the A/F sensor are functioning normally.
- The A/F sensor is a current output element, and therefore the current is converted into voltage inside the ECM. If measuring voltage at connectors of A/F ratio sensor or ECM, you can obtain a constant voltage.

*: When using the OBD II scan tool (excluding hand–held tester).

OK	**Go to step 15.**

NG

3	Check connection of PCV valve and hose.

NG → Repair or replace PCV valve and hose

OK

4	Check resistance of A/F sensor heater (bank 1 sensor 1).

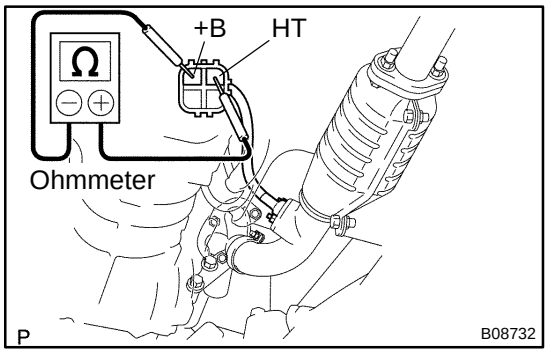

PREPARATION:
Disconnect the sensor connector.
CHECK:
Using an ohmmeter, measure the resistance between terminals +B and HT.
OK:

at 20˚C (68˚F)	0.8 – 1.4 Ω
at 800˚C (1,472˚F)	1.8 – 3.2 Ω

NG → Replace A/F sensor.

OK

5	Check EFI main relay (Marking : EFI).

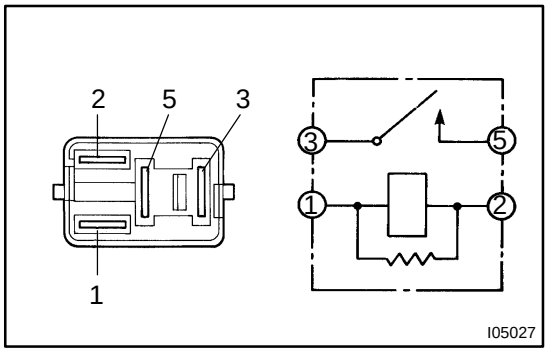

PREPARATION:
Remove the EFI main relay from RB No. 2.
CHECK:
Inspect the EFI main relay.
OK:

Condition	Tester connection	Specified condition
Constant	1 – 2	Continuity
	3 – 5	No continuity
Apply B+ between terminals 1 and 2.	3 – 5	Continuity

NG → Replace EFI main relay

OK

6	Check for open and short in harness and connector between ECM and A/F sensor (bank 1 sensor 1) (See page IN–28).

NG → Repair or replace harness or connector.

OK

7	Check air induction system (See page SF–1).

NG → Repair or replace.

OK

8	Check gas leak on exhaust system.

NG → Repair or replace.

OK

9	Check fuel pressure (See page SF–5).

NG → Check and repair fuel pump, pressure regulator, fuel pipe line and filter (See page SF–1).

OK

10	Check injector injection (See page SF–19).

NG → Replace injector.

OK

11	Replace A/F sensor.

GO

12	Perform confirmation driving pattern (See page DI–421).

GO

13	Is there DTC P0134 being output again?

YES → Check and replace ECM (See page IN–28) and perform confirmation driving pattern (See page DI–421)

NO

14	Did vehicle run out of fuel in past?

NO → Check for intermittent problems (See page DI–218).

YES

DTC P0134 is caused by shortage of fuel.

15	Perform confirmation driving pattern (See page DI–421).

GO

16	Is there DTC P0134 being output again?

NO → Go to step 20.

YES

17	Replace A/F sensor.

GO

18	Perform confirmation driving pattern (See page DI–421).

GO

19	Is there DTC P0134 being output again ?

YES → Check and replace ECM (See page IN–28) and perform confirmation driving pattern (See page DI–421)

NO

20	Did vehicle run out of fuel in past?

NO → Check for intermittent problems (See page DI–218).

YES

DTC P0134 is caused by shortage of fuel.

DIB1T–01

DTC	P0136	Oxygen Sensor Circuit Malfunction (Bank 1 Sensor 2)

CIRCUIT DESCRIPTION

To obtain a high purification rate for the CO, HC and NOx components of the exhaust gas, a three–way catalytic converter is used, but for the most efficient use of the three–way catalytic converter, the air–fuel ratio must be precisely controlled so that it is always close to the stoichiometric air–fuel ratio.

The oxygen sensor has the characteristic whereby its output voltage changes suddenly in the vicinity of the stoichiometric air–fuel ratio. This is used to detect the oxygen concentration in the exhaust gas and provide feedback to the computer for control of the air–fuel ratio.

When the air–fuel ratio becomes LEAN, the oxygen concentration in the exhaust increases and the oxygen sensor informs the ECM of the LEAN condition (small electromotive force: < 0.45 V).

When the air–fuel ratio is RICHER than the stoichiometric air–fuel ratio the oxygen concentration in the exhaust gas in reduced and the oxygen sensor informs the ECM of the RICH condition (large electromotive force: > 0.45V).

The ECM judges by the electromotive force from the oxygen sensor whether the air–fuel ratio is RICH or LEAN and controls the injection time accordingly. However, if malfunction of the oxygen sensor causes output of abnormal electromotive force, the ECM is unable to perform accurate air–fuel ratio control.

The oxygen sensors include a heater which heats the zirconia element. The heater is controlled by the ECM. When the intake air volume is low (the temp. of the exhaust gas is low) current flows to the heater to heat the sensor for accurate oxygen concentration detection.

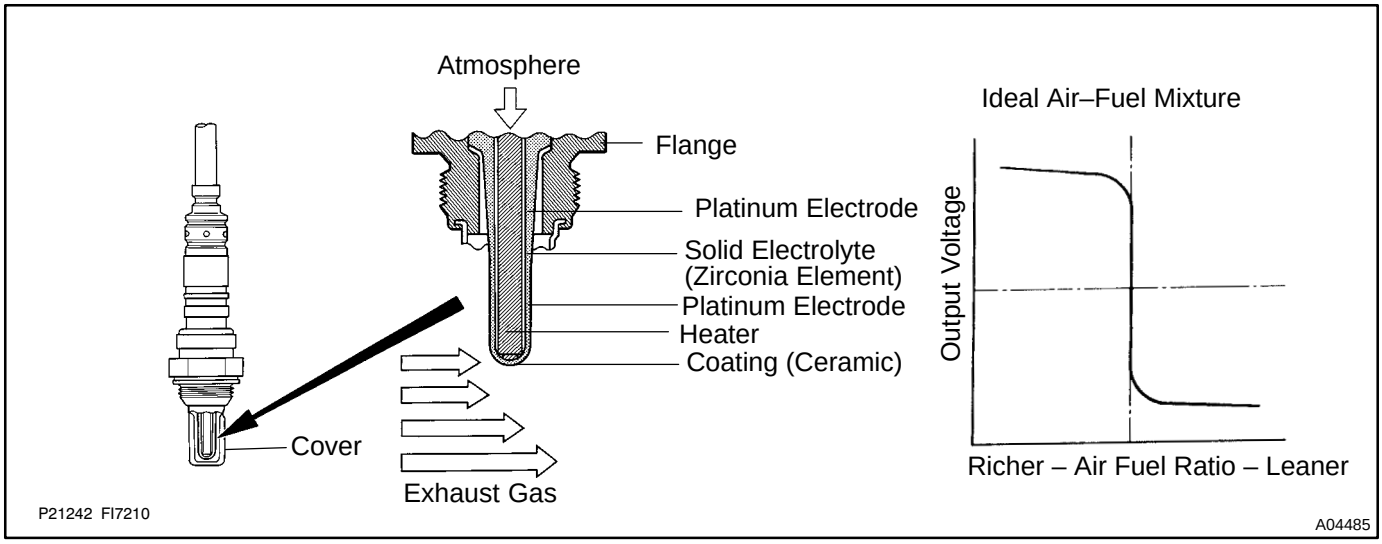

DTC No.	DTC Detecting Condition	Trouble Area
P0136	Output Voltage of heated oxygen sensor remains at 0.4 V or more or 0.5 V or less when vehicle is driven at 50 km/h (31 mph) or more after engine is warmed up (2 trip detection logic)	• Open or short in oxygen sensor circuit • Heated oxygen sensor • Heated oxygen sensor heater

HINT:

- Bank 1 refers to bank that includes cylinder No.1.
- Bank 2 refers to bank that does not include cylinder No.1.
- Sensor 1 refers to the sensor closer to the engine body.
- The oxygen sensor's output voltage and the short – term fuel trim value can be read using the hand–held tester or OBD II scan tool.

WIRING DIAGRAM

Refer to DTC P0134 on page DI–278.

CONFIRMATION DRIVING PATTERN

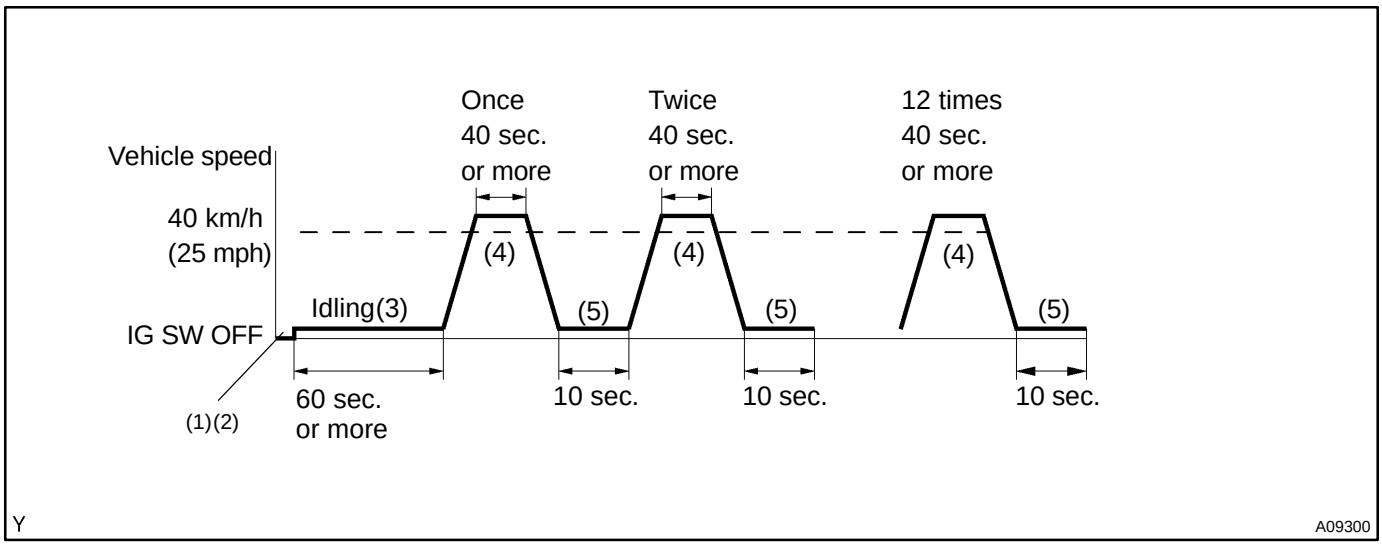

(1) Connect the hand–held tester to the DLC3.
(2) Switch the hand–held tester from the Normal Mode to the Check (Test) Mode (See page DI–218).
(3) Start the engine and let the engine idle for 60 seconds or more.
(4) Drive the vehicle at 40 km/h (25 mph) or more for 40 seconds or more.
(5) Let the engine idle for 10 seconds or more.
(6) Preform steps (4) to (5) 12 times.

HINT:
If a malfunction exists, the MIL will light up on the combination meter during step (6).
NOTICE:
If the conditions in this test are not strictly followed, detection of the malfunction will not be possible. If you do not have a hand–held tester, turn the ignition switch OFF after performing steps (3) to (6), then perform steps (3) to (6) again.

INSPECTION PROCEDURE

HINT:
Hand–held tester only:
The narrowing down the trouble area is possible by performing ACTIVE TEST of the following ”A/F CONTROL” (A/F sensor, heated oxygen sensor or another can be distinguished).
Perform ACTIVE TEST by hand–held tester (A/F CONTROL).
HINT:
”A/F CONTROL” is an ACTIVE TEST which change the injection volume to –12.5 % or +25 %.

(1) Connect the hand–held tester to the DLC3 on the vehicle.
(2) Turn the ignition switch ON.
(3) Warm up the engine with the engine speed at 2,500 rpm for approx. 90 sec.
(4) Select the item ”DIAGNOSIS/ENHANCED OBD II/ACTIVE TEST/ A/F CONTROL”.
(5) Perform ”A/F CONTROL” when idle condition (press the ← or → button).

Result:

A/F sensor reacts in synchronizing with increase and decrease of injection volume (+25 % → rich output: Less than 3.0 V, –12.5 % → lean output: More than 3.35 V)

Heated oxygen sensor reacts in synchronizing with increase and decrease of injection volume (+25 % → rich output: More than 0.55 V, –12.5 % → lean output: Less than 0.4 V)

NOTICE:

However, there is a few second delay in the A/F sensor output. And there is about 20 seconds delay in the heated oxygen sensor.

	Output voltage of A/F sensor (sensor 1)	Output voltage of heated oxygen sensor (sensor 2)	Mainly suspect trouble area
Case 1	Injection volume +25 % –12.5 % Output voltage More than 3.35 V Less than 3.0 V **OK**	Injection volume +25 % –12.5 % Output voltage More than 0.55 V Less than 0.4 V **OK**	—
Case 2	Injection volume +25 % –12.5 % Output voltage No reaction **NG**	Injection volume +25 % –12.5 % Output voltage More than 0.55 V Less than 0.4 V **OK**	A/F sensor (A/F sensor, heater, A/F sensor circuit)
Case 3	Injection volume +25 % –12.5 % Output voltage More than 3.35 V Less than 3.0 V **OK**	Injection volume +25 % –12.5 % Output voltage No reaction **NG**	Heated oxygen sensor (heated oxygen sensor, heater, heated oxygen sensor circuit)
Case 4	Injection volume +25 % –12.5 % Output voltage No reaction **NG**	Injection volume +25 % –12.5 % Output voltage No reaction **NG**	Extremely rich or lean of the actual air–fuel ratio (Injector, fuel pressure, gas leakage in exhaust system, etc)

The following procedure of A/F CONTROL enable that to check its output (show its graph indication) of A/F sensor and heated oxygen sensor.

To display the graph indication. Select and push the ”YES or NO” button 2 data ”AFS B1S1 and O2S B1S2” or ”AFS B2S1 and O2S B2S2” and press button ”4” after selecting ”ACTIVE TEST/ A/F CONTROL/USER DATA”.

HINT:

Read freeze frame data using the hand–held tester or the OBD II scan tool, as freeze frame data records the engine conditions when a malfunction is detected. When troubleshooting, it is useful for determining whether the vehicle was running or stopped, the engine was warmed up or not, the air–fuel ratio was lean or rich, etc. at the time of the malfunction.

1	**Are there any other codes (besides DTC P0136) being output?**

YES → **Go to relevant DTC chart (See page DI–231).**

NO

2	**Check for open and short in harness and connector between ECM and heated oxygen sensor (See page IN–28).**

NG → **Repair or replace harness or connector.**

OK

3	**Check output voltage of heated oxygen sensor.**

PREPARATION:

(a) Connect the OBD II scan tool or hand–held tester to the DLC3.
(b) Warm up the engine to the normal operating temperature.
(c) Select the item ” DIAGNOSIS/ENHANCED OBD II/DATA LIST/ALL/O2S B1 S2 ”.

CHECK:

Read the output voltage of the heated oxygen sensor when the engine is suddenly raced.
HINT:
Perform quick racing to 3,000 rpm for 6 minutes using the accelerator pedal.

OK:

Heated oxygen sensor output voltage: Alternates between from 0.4 V or less to 0.5 V or more.

OK → **Check that each connector is properly connected.**

NG

Replace heated oxygen sensor.

DIB1V–01

DTC	P0300	Random/Multiple Cylinder Misfire Detected

DTC	P0301	Cylinder 1 Misfire Detected

DTC	P0302	Cylinder 2 Misfire Detected

DTC	P0303	Cylinder 3 Misfire Detected

DTC	P0304	Cylinder 4 Misfire Detected

DTC	P0305	Cylinder 5 Misfire Detected

DTC	P0306	Cylinder 6 Misfire Detected

CIRCUIT DESCRIPTION

Misfire: The ECM uses the crankshaft position sensor and camshaft position sensor to monitor changes in the crankshaft rotation for each cylinder.

The ECM counts the number of times the engine speed change rate indicates that misfire has occurred. And when the misfire rate equals to or exceeds the count of indicating that the engine condition has deteriorated, the MIL lights up.

If the misfire rate is high enough and the driving conditions will cause the catalyst to overheat, the MIL blinks when misfiring occurs.

HINT:

- For any particular 200 revolutions of engine, misfiring is detected, which can cause catalyst to overheat (This cause MIL to blink. 1trip detection logic).
- For any particular 1,000 revolutions of engine, misfiring is detected, which causes deterioration in emissions (This cause MIL to light up. 2trip detection logic).

DTC No.	DTC Detection Condition	Trouble Area
P0300	Misfiring of random cylinders is detected	• Open or short in engine wire • Connector connection • Vacuum hose connection • Ignition system • Injector • Fuel pressure • Mass air flow meter • Engine coolant temp. sensor • Compression pressure • Valve clearance • Valve timing • PCV hose connection • PCV hose • ECM
P0301 P0302 P0303 P0304 P0305 P0306	Misfiring of each cylinder is detected	

HINT:
When codes for a misfiring cylinder are recorded repeatedly but no random misfire code is recorded, it indicates that the misfires have been detected and recorded at different times.

WIRING DIAGRAM

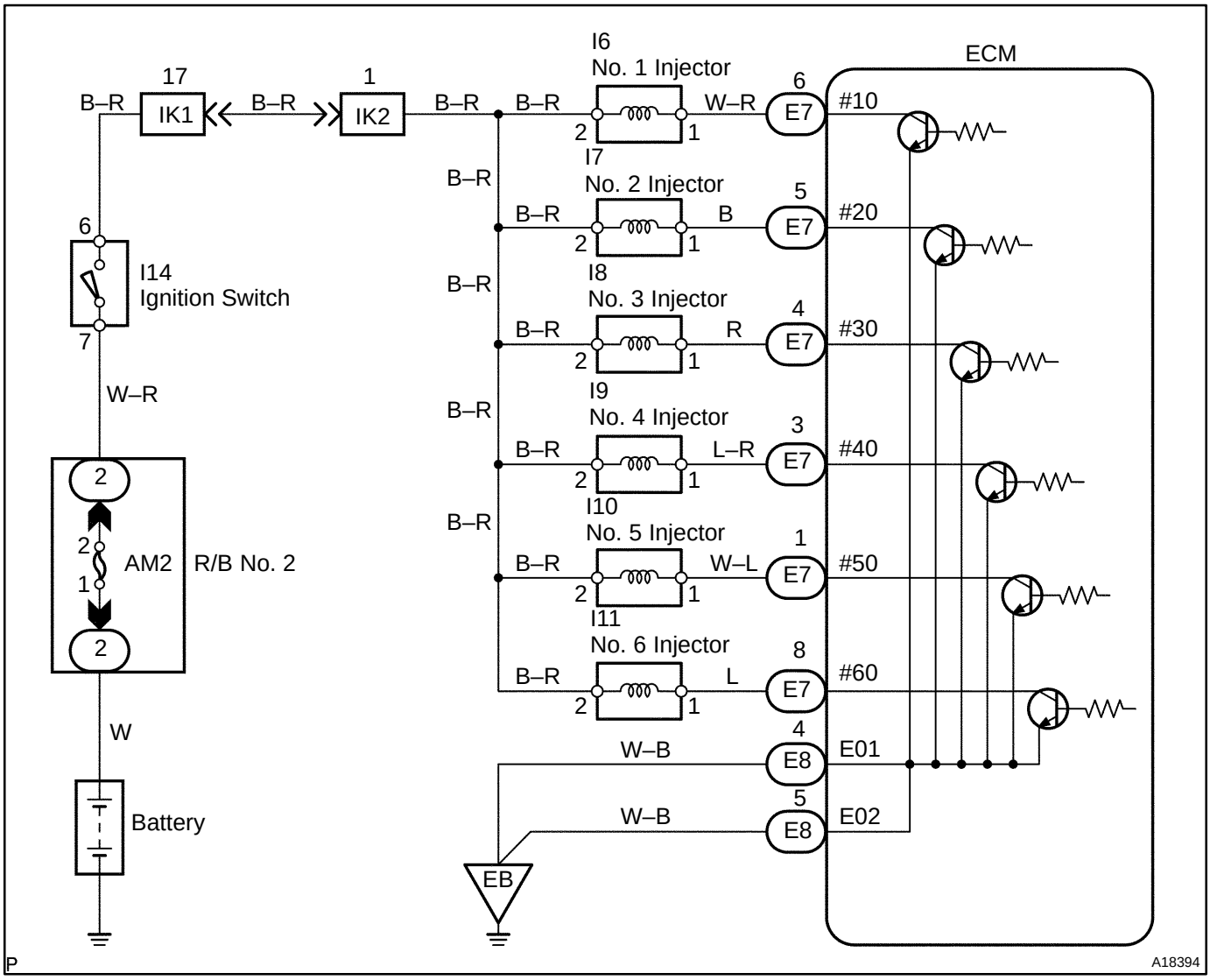

CONFIRMATION DRIVING PATTERN

(a) Connect the hand–held tester or the OBD II scan tool to the DLC3.
(b) Record DTC and the freeze frame data.
(c) Use the hand–held tester to set to the Check Mode (See page DI–218).
(d) Read the value on the misfire counter for each cylinder when idling. If the value is displayed on the misfire counter, skip the following procedure of confirmation driving.
(e) Drive the vehicle several times with the engine speed, load and its surrounding range shown with ENGINE SPD, CALC LOAD in the freeze frame data or MISFIRE RPM, MISFIRE LOAD in the data list.

If you have no hand–held tester, turn the ignition switch OFF after the symptom is simulated the first time. Then repeat the simulation process again.

HINT:

In order to memorize the DTC of misfire, it is necessary to drive around MISFIRE RPM, MISFIRE LOAD for the following period of time in the data list. Take care not to turn the ignition switch OFF. Turning the ignition switch OFF switches the diagnosis system from check (test) mode to normal mode. So all DTCs, etc., are erased.

Engine Speed	Time
Ignition	3 minutes 30 seconds or more
1,000 rpm	3 minutes or more
2,000 rpm	1 minute 30 seconds or more
3,000 rpm	1 minute or more

(f) Check whether there is misfire or not by monitoring DTC and the freeze frame data. After that, record them.
(g) Turn the ignition switch OFF and wait at least 5 seconds.

INSPECTION PROCEDURE

HINT:

- If DTCs besides misfire are memorized simultaneously, first perform the troubleshooting for them.
- Read freeze frame data using the hand–held tester or the OBD II scan tool, as freeze frame data records the engine conditions when a malfunction is detected. When troubleshooting, it is useful for determining whether the vehicle was running or stopped, the engine was warmed up or not, the air–fuel ratio was lean or rich, etc. at the time of the malfunction.
- When the vehicle is brought to the workshop and the misfire is not occurred, misfire can be confirmed by reproducing the condition of the freeze frame data. Also, after finishing the repair, confirm that there is no misfire (See the confirmation driving pattern).
- On 6 and 8 cylinder engines, misfiring cylinder identification is disabled at high engine speed and only an general misfire fault code P0300 is stored instead of a cylinder specific misfire fault code (i. e., P0301 – P0308). Under the following conditions, only P0300 code may be stored. Misfire starts in the high engine speed area or Misfire occurs only in the high engine speed area. Therefore, when a general misfire fault code (i.e., P0300) is only stored, erase the DTCs after read freeze frame data with the hand–held tester or OBD II scan tool. Start the engine and drive the confirmation patten (See the CONFIRMATION DRIVING PATTERN) and read the value of the misfire ratio for each cylinder (or DTC). Perform the repair correspond to the high misfire ratio cylinder (or the misfiring cylinder indicated by DTC). After completing the repair, confirm no misfire is occurring by driving the confirmation pattern.
- When either of SHORT FT #1, LONG FT #1, SHORT FT #2 or LONG FT #2 in the freeze frame data is besides the range of ±20 %, there is a possibility that the air–fuel ratio is inclining either to RICH (–20 % or less) or LEAN (+20 % or more).
- When COOLANT TEMP in the freeze frame data is less than 80˚C (176˚F), there is a possibility or misfire only during warming up.

- If the misfire cannot be reproduced, the reason may be because of the driving with lack or fuel, the use of improper fuel, a stain on ignition plug, etc.
- Be sure to check the value on the misfire counter after the repair.

1	**Are there any other codes (besides DTC P0300, P0301, P0302, P0303, P0304,P0305 or P0306) being output?**

HINT:
If any other code besides DTC (P0300, P0301, P0302, P0303, P0304, P0305 or P0306) output, perform the troubleshoot on that DTC.

YES → **Go to relevant DTC chart (See page DI–231).**

NO

2	**Check wire harness and vacuum hose in engine room.**

CHECK:
(a) Check the connection conditions of wire hareness and connector.
(b) Check the disconnection, piping and break of vacuum hose.

NG → **Repair or replace, then confirm that there is no misfire (See confirmation driving pattern).**

OK

3	**Check connection of PCV piping.**

NG → **Repair or replace PCV piping.**

OK

4	**Connect hand–held tester, and read the number of misfire.**

PREPARATION:

(a) Connect the hand–held tester to the DLC3.
(b) Turn the ignition switch ON and push the hand–held tester main switch ON.
(c) Select the item ”DIAGNOSIS/ENHANCED OBD II/DATA LIST/ALL/CYL #1 – CYL #6”.
(d) Start the engine.

CHECK:

Read the number of misfire on the hand–held tester.

HINT:

When a misfire is not is reproduced, be sure to branch below based on the stored DTC.

RESULT:

High Misfire Rate Cylinder	Proceed to
1 or 2 cylinders	Type I
More than 3 cylinders	Type II

Type II → **Go to step 15.**

Type I

5	Check spark plug and spark of misfiring cylinder.

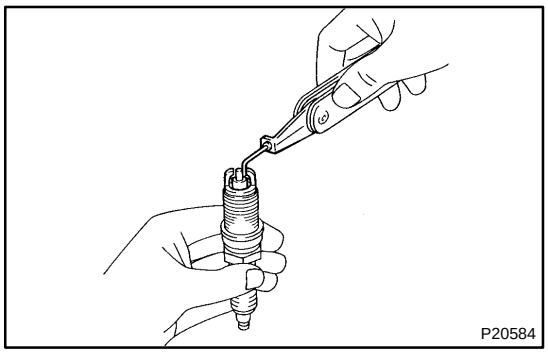

PREPARATION:

(a) Remove the ignition coil (See page IG–7).

(b) Remove the spark plug.

CHECK:

(a) Check spark plug type.

(b) Check the electrode for carbon deposits.

(c) Check the electrode gap.

OK:

(a) Recommended spark plug:

DENSO made	K16TR11
NGK made	BKR5EKB–11

(b)

No large carbon deposit present.

Not wet with gasoline or oil.

(c)

Correct electrode gap for new spark plug:

1.0 – 1.1 mm (0.039 – 0.043 in.)

PREPARATION:

(a) Install the spark plug to the ignition coil, and connect the ignition coil connector.

(b) Disconnect injector connector.

(c) Ground the spark plug.

CHECK:

Check if spark occurs while engine is being cranked.

NOTICE:

To prevent excess fuel from being injected from the injectors during this test, don't crank the engine for more than 5 – 10 sec. at a time.

OK:

Spark jumps across electrode gap.

OK	**Go to step 8.**

NG

6	**Change normal spark plug and check spark of misfiring cylinder.**

PREPARATION:

(a) Disconnect the spark plug.
(b) Replace the normal spark plug.
(c) Install the spark plug to the ignition coil, and connect the ignition coil connector.
(d) Disconnect the injector connector.
(e) Ground the spark plug.

CHECK:

Check if spark occurs while the engine is being cranked.

NOTICE:

To prevent excess fuel from being injected from the injectors during this test, don't crank the engine for more than 5 – 10 seconds at a time.

OK:

Spark jumps across electrode gap.

OK → **Replace spark plug.**

NG

7	**Check for open and short in harness and connector between misfire cylinder of ignition coil with igniter and ECM (See page IN–28).**

OK → **Replace ignition coil with igniter, then confirm that there is no misfire.**

NG

Repair or replace harness or connector (See page IN–28).

8	Check voltage of ECM terminal for injector of failed cylinder.

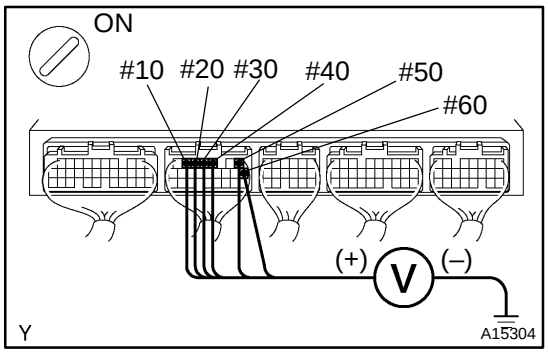

PREPARATION:

(a) Remove the glove compartment (See page SF–63).

(b) Turn the ignition switch ON.

CHECK:

Measure the voltage between applicable terminal of the ECM connector and body ground.

OK:

Voltage: 9 – 14 V

Reference: INSPECTION USING OSCILLOSCOPE

With the engine idling, check the waveform between terminals #10 – #60 and E01 of the ECM connectors.

HINT:

The correct waveform is as shown.

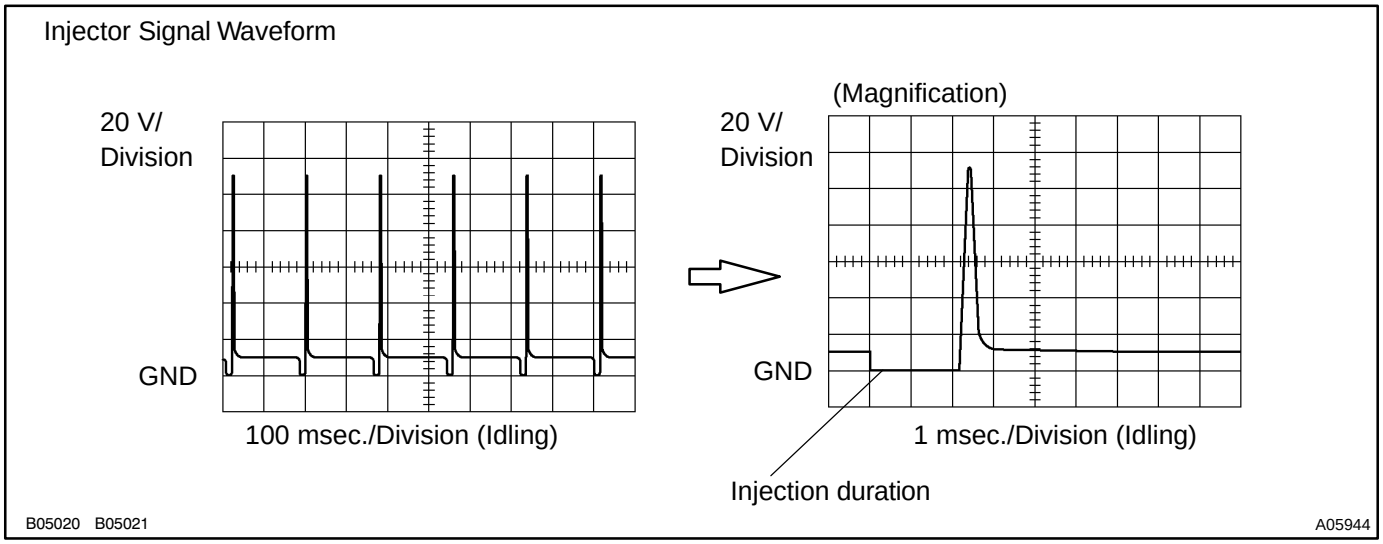

OK	Go to step 11.

NG

9	Check resistance of injector of misfiring cylinder (See page SF–19).

NG	Replace injector.

OK

10	Check for open and short in harness and connector between ignition switch and injector, injector and ECM of misfiring cylinder (See page IN–28)

NG → Repair or replace harness or connector.

OK

11	Check injector injection of misfiring cylinder (See page SF–19).

NG → Replace injector.

OK

12	Check compression pressure of misfiring cylinder (See page EM–3).

NG → Repair or replace.

OK

13	Check valve clearance of misfiring cylinder (See page EM–4).

NG → Adjust valve clearance.

OK

14	Switch the step by the number of misfire cylinder (Refer the result of Step 4).

High Misfire Rate Cylinder	Proceed to
1 or 2 cylinders	Type I
More than 3 cylinders	Type II

Type II → Check intermittent problems (See page DI–218).

Type I

15	Check valve timing (Check for loose and jumping teeth of timing belt) (See page EM–17).

NG → Adjust valve timing (Repair or replace timing belt).

OK

16	Check fuel pressure (See page SF–5).

NG → Check and repair fuel pump, pressure regulator, fuel pipe line and filter (See page SF–1).

OK

17	Check mass air flow meter (See page SF–26).

NG → Repair mass air flow meter.

OK

18	**Check engine coolant temp. sensor (See page SF–54).**

NG → **Replace engine coolant temp. sensor.**

OK

19	**Switch the step by the number of misfire cylinder (Refer the result of Step 3).**

High Misfire Rate Cylinder	Proceed to
1 or 2 cylinders	Type I
More than 3 cylinders	Type II

Type II → **Go to step 5.**

Type I

Check intermittent problems (See page DI–218).

DIB1O–01

CIRCUIT INSPECTION

DTC	P0031	Oxygen (A/F) Sensor Heater Control Circuit Low (Bank 1 Sensor 1)

DTC	P0032	Oxygen (A/F) Sensor Heater Control Circuit High (Bank 1 Sensor 1)

CIRCUIT DESCRIPTION

Refer to DTC P2195 on page DI–421.

HINT:

- This DTC is related to A/F sensor is in a malfunction, although the caption is oxygen sensor.
- The ECM provides a pulse width to control current through the heater. The A/F ratio sensor heater circuit uses a relay on the B+ side of the circuit.

Reference

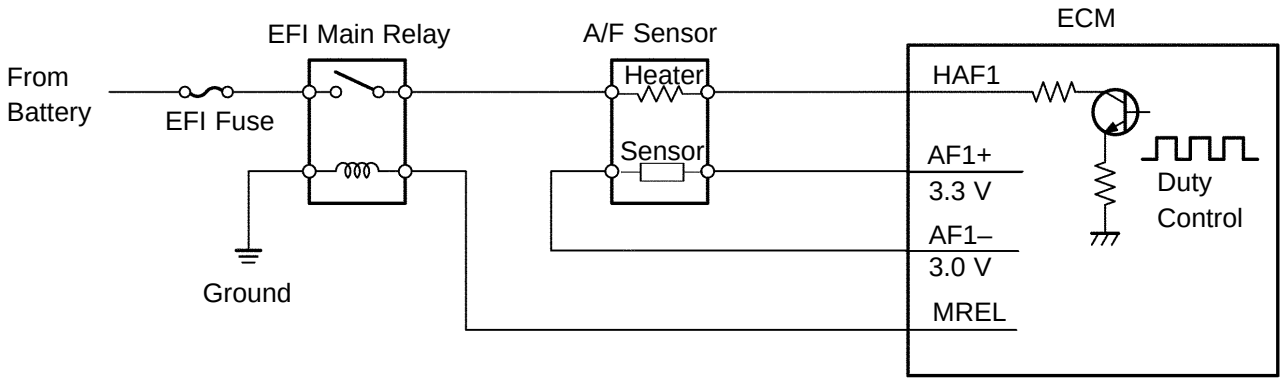

DTC No.	DTC Detection Condition	Trouble Area
P0031	Heater current is 3 A or less when the heater operates (2 trip detection logic)	• Open or short in heater circuit of A/F sensor • A/F sensor heater • EFI main relay • ECM
P0032	When the heater operates, heater current exceeds 19.7 A (2 trip detection logic)	

HINT:

Sensor 1 refers to the sensor closest to the engine body.

WIRING DIAGRAM

Refer to DTC P0134 on page DI–278.

INSPECTION PROCEDURE

HINT:

Read freeze frame data using the hand–held tester or the OBD II scan tool, as freeze frame dada records the engine conditions when a malfunction is detected. When troubleshooting, it is useful for determining whether the vehicle was running or stopped, the engine was warmed up or not, the air–fuel ratio was lean or rich, etc. at the time of the malfunction.

1	Check resistance of A/F sensor heater.

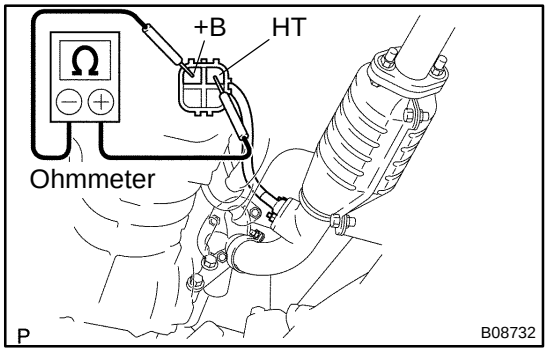

PREPARATION:

Disconnect the sensor connector.

CHECK:

Using an ohmmeter, measure the resistance between terminals +B and HT.

OK:

at 20°C (68°F)	0.8 – 1.4 Ω
at 800°C (1,472°F)	1.8 – 3.2 Ω

NG → **Replace A/F sensor.**

OK

2	Check EFI main relay (Marking : EFI).

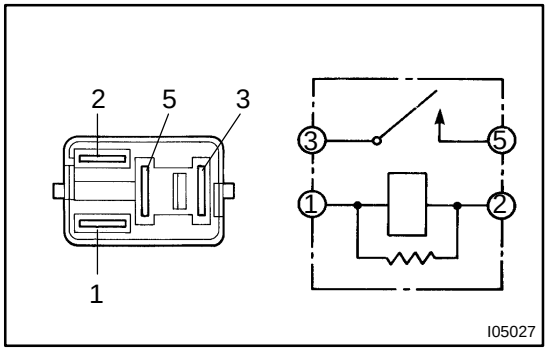

PREPARATION:

Remove the EFI main relay from RB No. 2.

CHECK:

Inspect the EFI main relay.

OK:

Condition	Tester connection	Specified condition
Constant	1 – 2	Continuity
	3 – 5	No continuity
Apply B+ between terminals 1 and 2.	3 – 5	Continuity

NG → **Replace EFI main relay**

OK

3	Check voltage between terminal HAF1 of ECM connector and body ground.

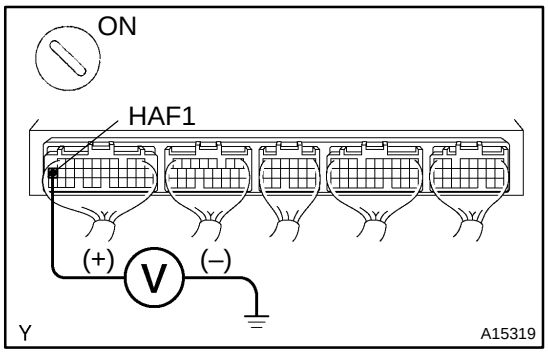

PREPARATION:

(a) Remove the glove compartment (See page SF–63).

(b) Turn the ignition switch ON.

CHECK:

Measure the voltage between terminal HAF1 of the ECM connector and body ground.

OK:

Voltage: 9 – 14 V

OK	Check and replace ECM (See page IN–28).

NG

Check and repair harness or connector between EFI main relay (Marking: EFI) and A/F sensor, and A/F sensor and ECM (See page IN–28).

DIA9K–02

DTC	P0351	Ignition Coil ”A” Primary/Secondary Circuit

CIRCUIT DESCRIPTION

There DTCs indicate a malfunction related to primary circuit.
A Direct Ignition System (DIS) has been adopted. The DIS improves the ignition timing accuracy, reduces high–voltage loss, and enhances the overall reliability of the ignition system by eliminating the distributor. The DIS is a 2–cylinder simultaneous ignition system which ignites 2 cylinders simultaneously with one ignition coil. In the 2–cylinder simultaneous ignition system, each of the 2 spark plugs is connected to the end of the secondary winding. High voltage generated in the secondary winding is applied directly to the spark plugs. The sparks of the 2 spark plugs passes simultaneously from the center electrode to the ground electrode (No. 1, 5 and 3 cylinder) and from the ground electrode to the center electrode (No. 4, 2 and 6 cylinder). The ECM determines the ignition timing end outputs the ignition signal (IGT) for each cylinder. Based on the IGT signals, the igniter controls the primary ignition signals (IGC) for all ignition coils. At the same time, the igniter also sends an ignition confirmation signal (IGF) as a fail–safe measure to the ECM.

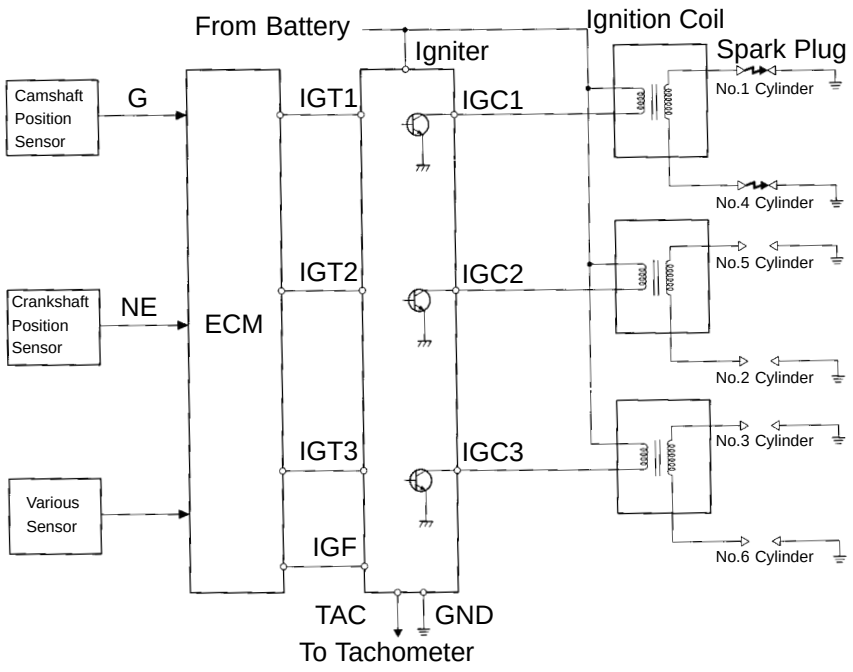

S00251

DTC No.	DTC Detection Condition	Trouble Area
P0351	Condition (a) is repeated 3 times consecutively during 6 consecutively IGT signals while engine is running: (a) IGF signal is not input to ECM for 2 or more ignitions	• Ignition system • Open or short in IGF and IGT circuit from igniter to ECM • Igniter • Ignition coil • ECM

WIRING DIAGRAM

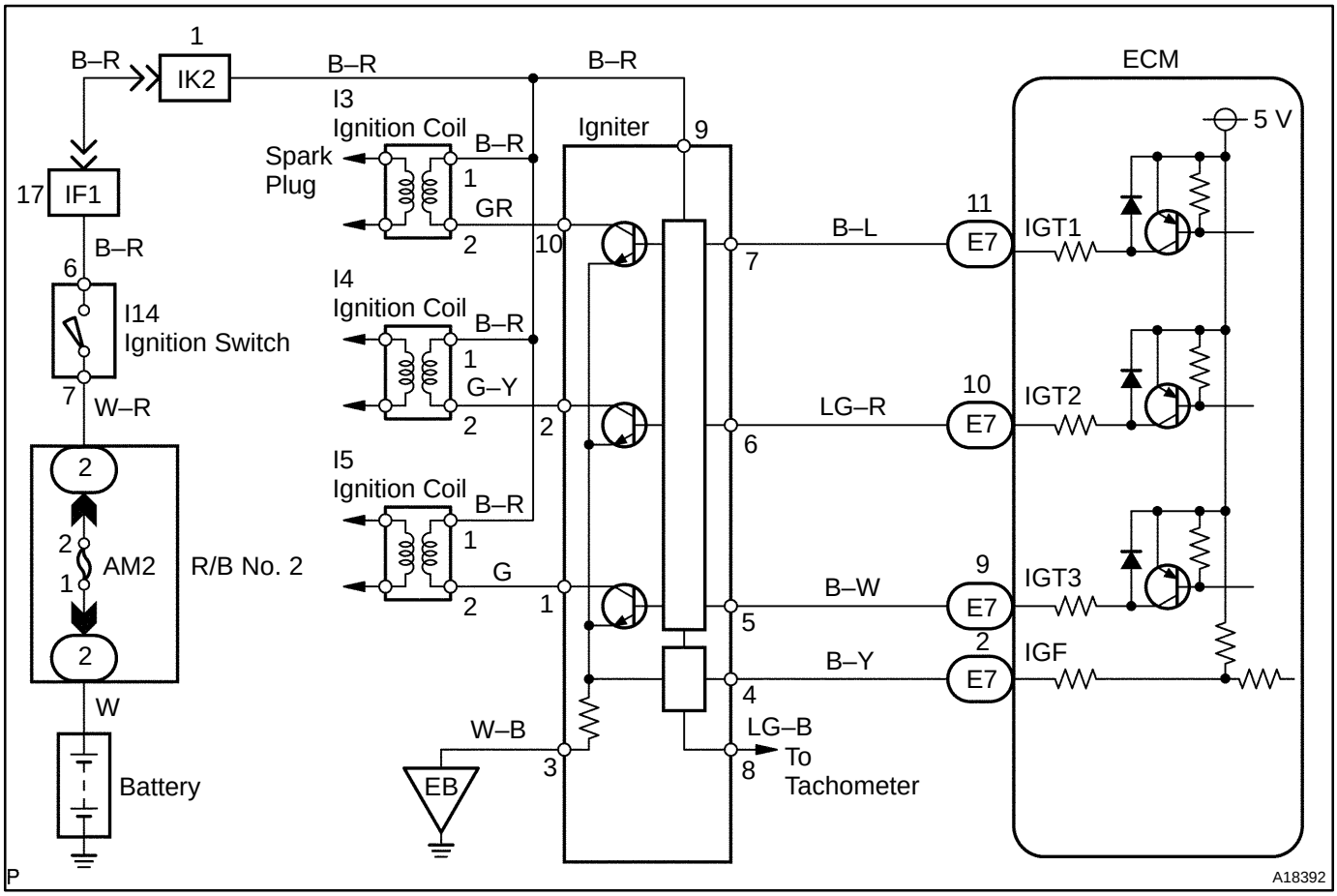

INSPECTION PROCEDURE

HINT:

Read freeze frame data using the hand–held tester or the OBD II scan tool, as freeze frame data records the engine conditions when a malfunction is detected. When troubleshooting, it is useful for determining whether the vehicle was running or stopped, the engine was warmed up or not, the air–fuel ratio was lean or rich, etc. at the time of the malfunction.

1	**Check spark plug and spark of misfiring cylinder (See page DI–301).**

NG → **Go to step 4.**

OK

2	**Check for open and short in harness and connector in IGF signal circuit between ECM and igniter (See page IN–28).**

NG → **Repair or replace harness or connector.**

OK

3	**Disconnect igniter connector and check voltage between terminal IGF of ECM connector and body ground.**

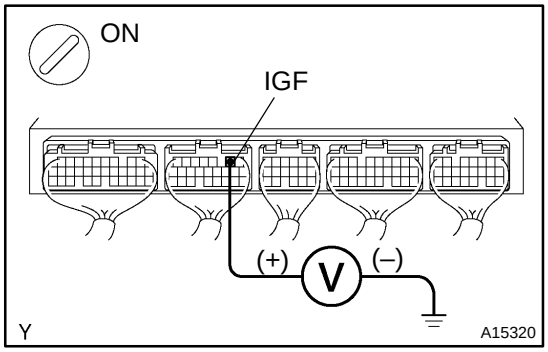

PREPARATION:

(a) Disconnect the igniter connector.
(b) Remove the glove compartment (See page SF–63).
(c) Turn the ignition switch ON.

CHECK:

Measure the voltage between terminal IGF of the ECM connector and body ground.

OK:

Voltage: 4.5 – 5.5 V

OK → **Replace igniter.**

NG

Check and replace ECM (See page IN–28).

4	**Check for open and short in harness and connector in IGT1 – IGT3 signal circuit between ECM and igniter (See page IN–28).**

NG → **Repair or replace harness or connector.**

OK

5	Disconnect igniter connector, and check voltage between terminals IGT1 – IGT3 of ECM connector and body ground.

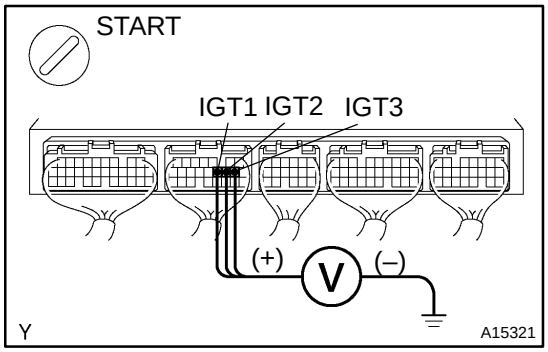

PREPARATION:

(a) Disconnect the igniter connector.

(b) Remove the glove compartment (See page SF–63).

CHECK:

Measure the voltage between terminals IGT1 – IGT3 of the ECM connector and body ground when the engine is cranked.

OK:

Voltage: More than 0.1 V and less than 5.0 V

NG	Check and replace ECM (See page IN–28).

OK

6	Check voltage between terminals IGT1 – IGT3 of ECM connector and body ground.

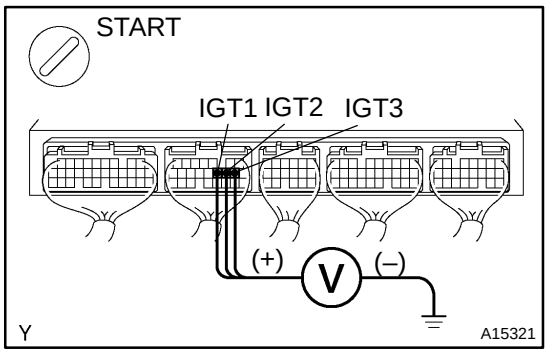

PREPARATION:

Remove the glove compartment (See page SF–63).

CHECK:

Measure the voltage between terminal IGT1 – IGT3 of the ECM connector and body ground when the engine is cranked.

OK:

Voltage: More than 0.1 V and less than 4.5 V

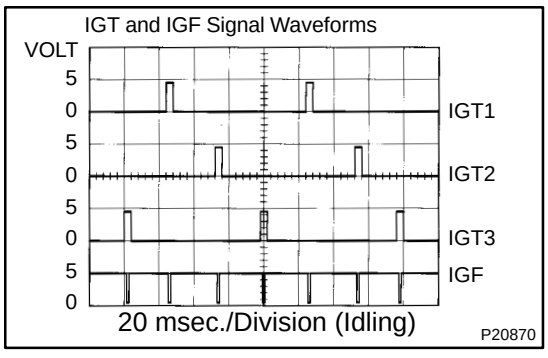

Reference: INSPECTION USING OSCILLOSCOPE

During idling, check the waveforms between terminals IGT1 – IGT3, and IGF and E1 of the ECM connector.

HINT:

The correct waveforms are as shown.

NG	Go to step 9.

OK

7	**Check voltage between terminal 9 of igniter connector and body ground.**

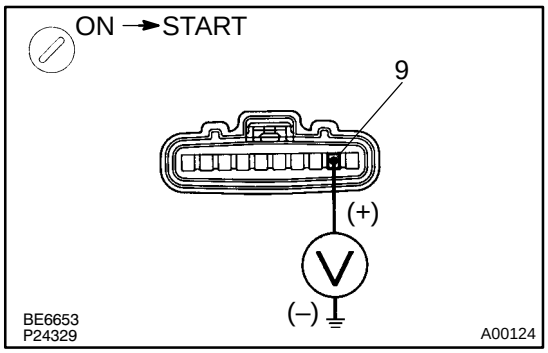

PREPARATION:
Disconnect the igniter connector.
CHECK:
Measure the voltage between terminal 9 of the igniter connector and body ground when the ignition switch is turned to ON and START positions.
OK:
Voltage: 9 – 14 V

NG	**Check and repair igniter power source circuit.**

OK

8	**Check for open and short in harness and connector between ignition switch and ignition coil, and ignition coil and igniter (See page IN–28).**

NG	**Repair or replace harness or connector.**

OK

9	**Check ignition coil and spark plug resistive cord (See page IG–1).**

NG	**Replace ignition coil.**

OK

Replace igniter.

DIB1P–01

DTC	P0037	Oxygen Sensor Heater Control Circuit Low (Bank 1 Sensor 2)

DTC	P0038	Oxygen Sensor Heater Control Circuit High (Bank 1 Sensor 2)

CIRCUIT DESCRIPTION

Refer to DTC P0136 on page DI–288.

HINT:

The ECM provides a pulse width to control current through the heater. The oxygen sensor heater circuit uses a relay on the B+ side of the circuit.

Reference

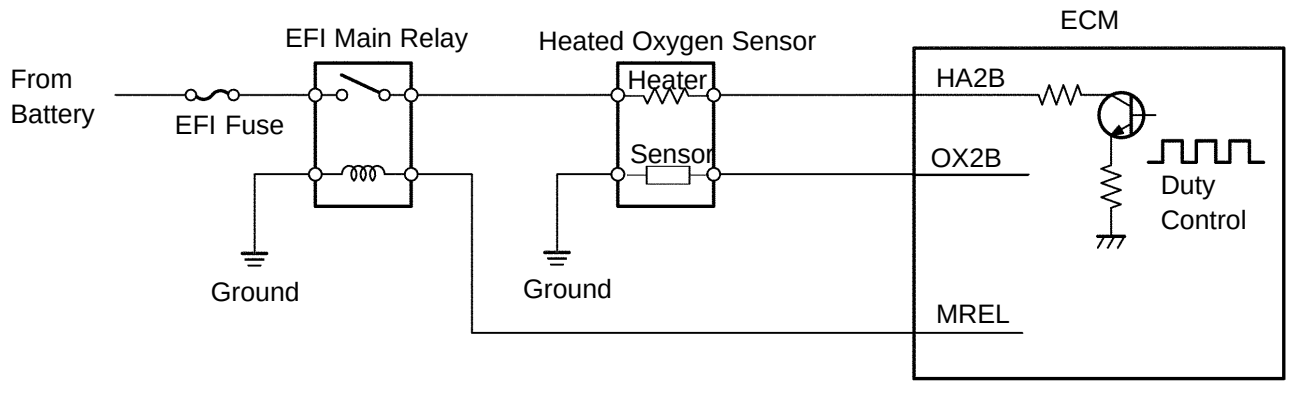

DTC No.	DTC Detection Condition	Trouble Area
P0037	Heater current 0.2 A or less when the heater operates (2 trip detection logic)	• Open or short in heater circuit of heated oxygen sensor • Heated oxygen sensor heater • EFI main relay • ECM
P0038	When the heater operates, heater current exceeds 2.35 A (2 trip detection logic)	

HINT:

- Sensor 1 refers to the sensor closest to the engine body.
- Sensor 2 refers to the sensor farthest from the engine body.

WIRING DIAGRAM

Refer to DTC P0134 on page DI–278.

INSPECTION PROCEDURE

HINT:

Read freeze frame data using the hand–held tester or the OBD II scan tool, as freeze frame data records the engine conditions when a malfunctions is detected. When troubleshooting, it is useful for determining whether the vehicle was running or stopped, the engine was warmed up or not, the air–fuel ratio was lean or rich, etc. at the time of the malfunction.

1	Check resistance of heated oxygen sensor heater.

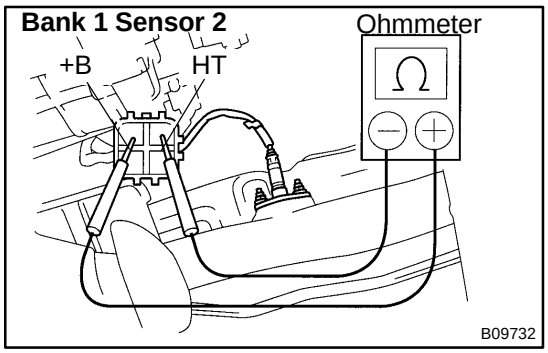

PREPARATION:
Disconnect the sensor connector.
CHECK:
Using an ohmmeter, measure the resistance between terminals +B and HT.
OK:

at 20˚C (68˚F)	11 – 16 Ω
at 800˚C (1,472˚F)	23 – 32 Ω

NG → **Replace heated oxygen sensor.**

OK

2	Check EFI main relay (Marking : EFI)

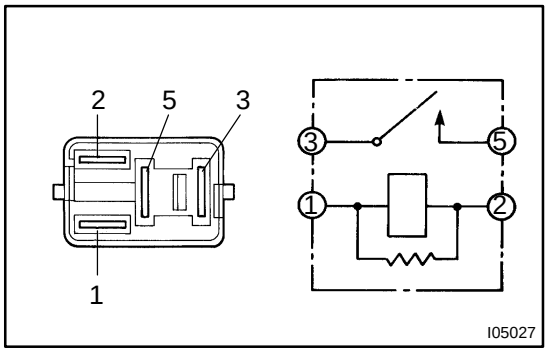

PREPARATION:
Remove the EFI main relay from RB No. 2.
CHECK:
Inspect the EFI main relay.
OK:

Condition	Tester connection	Specified condition
Constant	1 – 2	Continuity
	3 – 5	No continuity
Apply B+ between terminals 1 and 2.	3 – 5	Continuity

NG → **Replace EFI main relay**

OK

3	Check voltage between terminals HT2B of ECM connectors and body ground.

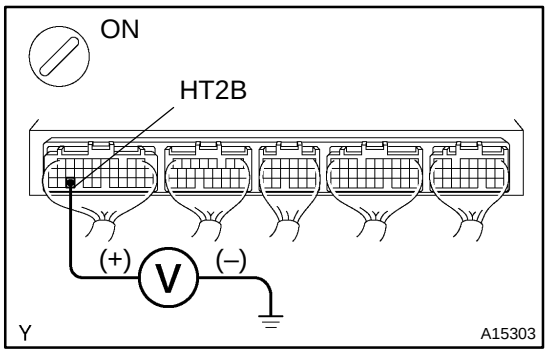

PREPARATION:

(a) Remove the glove compartment (See page SF–64).

(b) Turn the ignition switch ON.

CHECK:

Measure the voltage between terminal HT2B of the ECM connector and the body ground.

HINT:

Connect terminal HT2B to bank 1 sensor 2.

OK:

Voltage: 9 – 14 V

OK	Check and replace ECM (See page IN–28)

NG

Check and repair harness or connector between EFI main relay (Marking: EFI) and heated oxygen sensor, and heated oxygen sensor and ECM (See page IN–28).

DTC	P0420	Catalyst System Efficiency Below Threshold (Bank 1)

CIRCUIT DESCRIPTION

The ECM observes the waveform of the heated oxygen sensor located behind the catalyst to determine whether the catalyst is performance has deteriorated. If the catalyst is functioning normally, the waveform of the heated oxygen sensor located behind the catalyst switches back and forth between rich and lean much more slowly. When the waveform of the heated oxygen sensor located behind the catalyst alternates flatteringly between rich and lean, it indicates that catalyst performance has deteriorated.

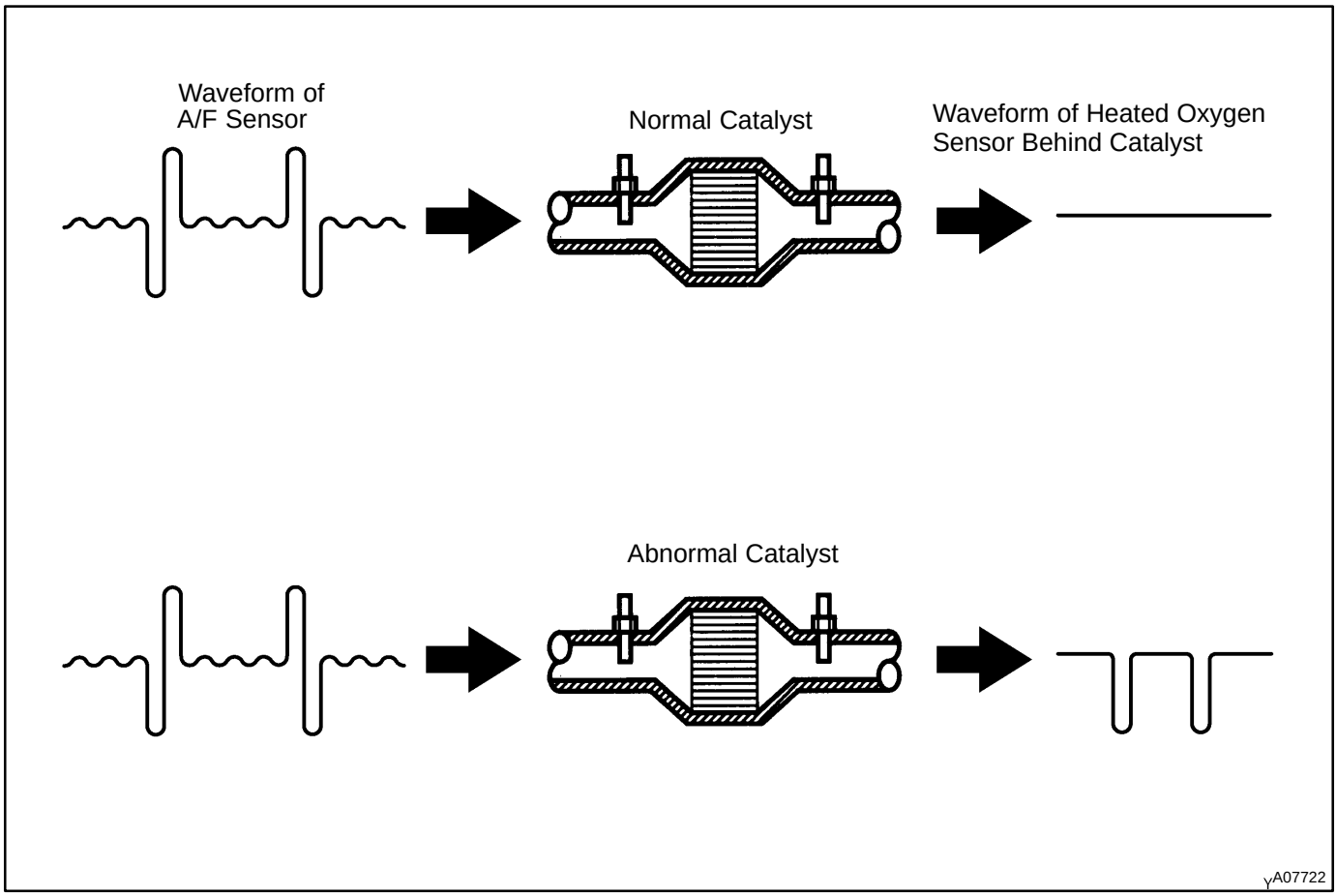

DTC No.	DTC Detection Condition	Trouble Area
P0420	After engine and catalyst are warmed up, and while vehicle is driven within set value and engine speed range, waveform of heated oxygen sensor (bank 1 sensor 2) alternates flatteringly between rich and lean (2 trip detection logic)	• Gas leakage in exhaust system • A/F sensor (bank 1 sensor 1) • Heated oxygen sensor (bank 1 sensor 2) • Three–way catalytic converter

CONFIRMATION ENGINE RACING PATTERN

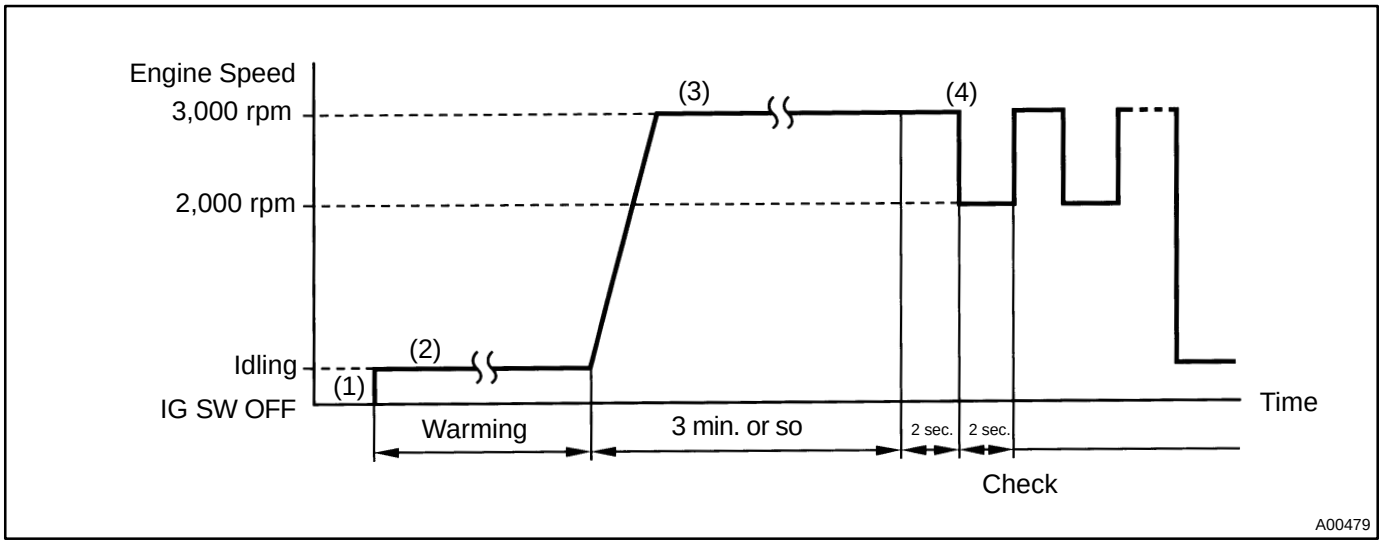

(1) Connect the OBD II scan tool or hand–held tester to the DLC3.
(2) Start the engine and warm it up with all the accessories switched OFF until the water temperature is stable.
(3) Race the engine at 2,500 – 3,000 rpm for about 3 min.
(4) When racing the engine at 3,000 rpm for 2 sec. and 2,000 rpm for 2 sec. alternately, check the waveform of the heated oxygen sensor (bank 1 sensor 2).

INSPECTION PROCEDURE

HINT:
Read freeze frame data using the hand–held tester or the OBD II scan tool, as freeze frame data records the engine conditions when a malfunction is detected. When troubleshooting, it is useful for determining whether the vehicle was running or stopped, the engine was warmed up or not, the air–fuel ratio was lean or rich, etc. at the time of the malfunction.

1	**Are there any other codes (besides DTC P0420) being output?**

YES → **Go to relevant DTC chart (See page DI–231).**

NO

2	**Check gas leakage on exhaust system.**

NG → **Repair or replace.**

OK

3	Check A/F sensor (bank 1 sensor 1) (See page SF–60).

NG → Repair or replace.

OK

4	Check heated oxygen sensor (bank 1 sensor 2) (See page SF–62).

NG → Repair or replace.

OK

Replace three–way catalytic converter.

DTC	P0441	Evaporative Emission Control System Incorrect Purge Flow

DTC	P0446	Evaporative Emission Control System Vent Control Circuit

CIRCUIT DESCRIPTION

The vapor pressure sensor, VSV for EVAP, VSV for canister closed valve (CCV) and VSV for pressure switching valve are used to detect abnormalities in the evaporative emission control system.

The ECM decides whether there is an abnormality in the evaporative emission control system based on the vapor pressure sensor signal.

DTCs P0441 and P0446 are recorded by the ECM when there is a malfunction in either the VSV for EVAP, the VSV for pressure switching valve, or in the vapor pressure sensor itself, or when evaporative emissions leak from the components within the dotted line in Fig. 1 below.

Fig. 1

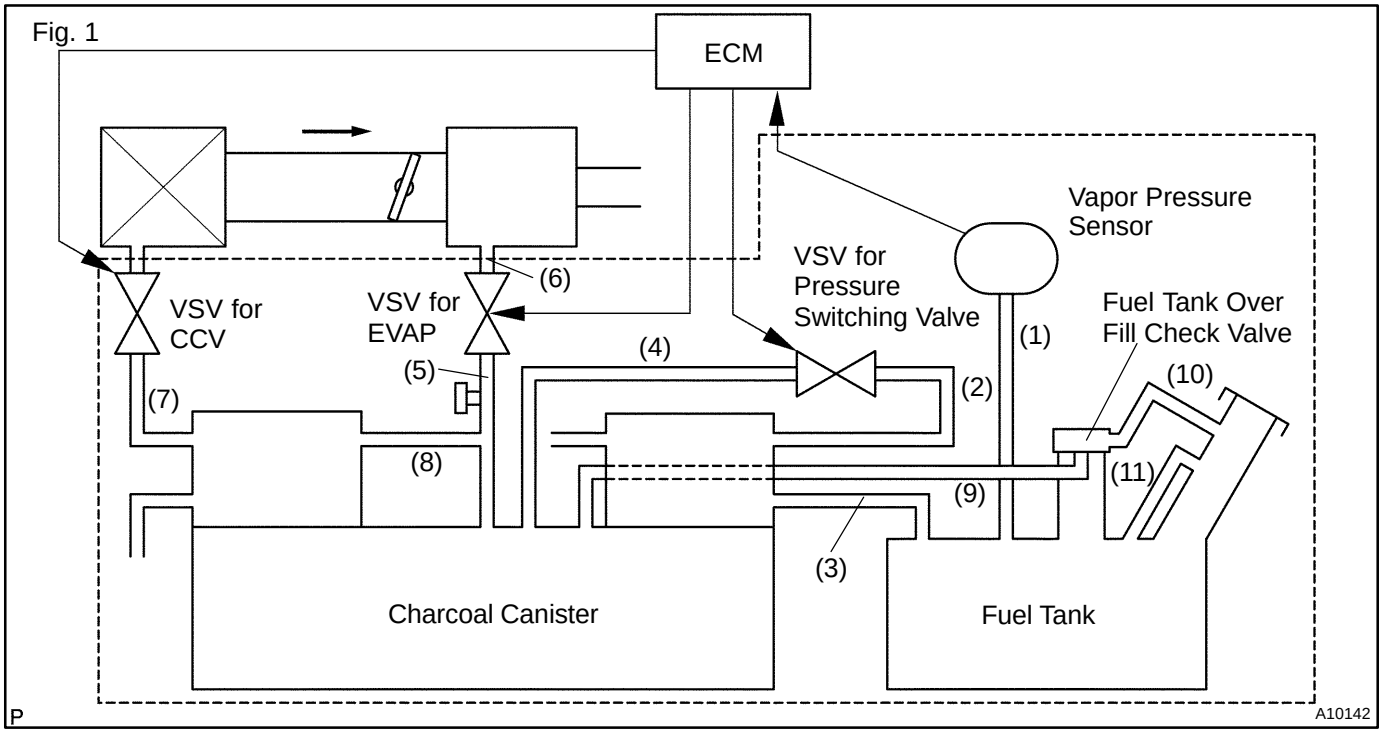

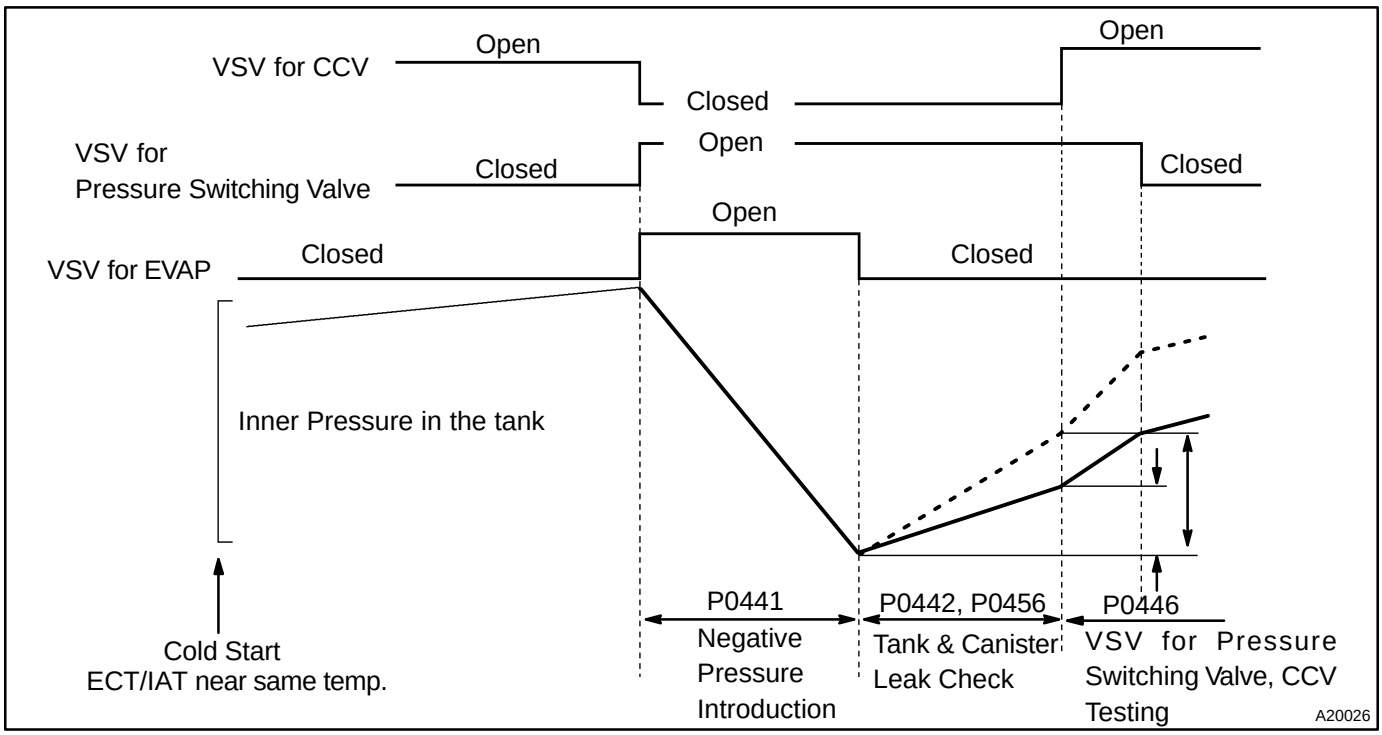

P0441

The ECM closes the CCV and opens the VSV for pressure switching valve causing vacuum to increase in the entire EVAP system.

The ECM continues to operate the VSV for EVAP until the vacuum is increased to a specified point at which time the ECM closes the VSV for EVAP.

If the vacuum did not increase, or if the vacuum increased beyond the specified limit, the ECM judges the VSV for EVAP and related components to be faulty.

P0446

When the vapor pressure rises to a specified point, the ECM opens the VSV for CCV. Pressure will increase rapidly because of the air allowed into the system. No increase or an increase below specified rate of pressure increase indicates a restriction on the air inlet side.

The ECM closes the VSV for pressure switching valve. This action blocks air entering the fuel tank side of system. The pressure rise on the fuel tank side is no longer as great.

If there was no change in pressure, the ECM will conclude the VSV for pressure switching valve did not close.

DTC No.	DTC Detecting Condition	Trouble Area
P0441	Pressure in charcoal canister and fuel tank does not drop during purge control (2 trip detection logic)	• Fuel tank cap incorrectly installed • Fuel tank cap cracked or damaged • Vacuum hose cracks, holed blocked, damaged or disconnected ((1), (2), (3), (4), (5), (6), (7), (8), (9), (10) and (11) in Fig. 1) • Open or short in vapor pressure sensor circuit • Vapor pressure sensor • Open or short in VSV circuit for EVAP • VSV for EVAP • Open or short in VSV circuit for CCV • VSV for CCV • Open or short in VSV circuit for pressure switching valve • VSV for pressure switching valve • Fuel tank cracked, holed or damaged • Charcoal canister cracked, holed or damaged • Fuel tank over fill check valve cracked or damaged • ECM
	During purge cut–off, negative pressure incoming in the charcoal canister and fuel tank will not stop. (2 trip detection logic)	
P0446	When VSV for pressure switching valve is ON, ECM judges that there is no continuity between vapor pressure sensor, fuel tank and charcoal canister (2 trip detection logic)	
	When VSV for pressure switching valve is turned OFF, pressure in fuel tank is maintained at atmospheric pressure (2 trip detection logic)	
	When VSV for CCV is ON, pressure in charcoal canister and fuel tank is maintained at atmospheric pressure (2 trip detection logic)	

HINT:

Typical DTC output of each trouble part

Trouble part		Typical DTC output (*1)
Small Leak		P0442 and/or P0456
Medium Leak (ex: Vacuum hose loose)		P0442
Large Leak (ex: Fuel tank cap loose)		P0441 and P0442 and P0446
VSV for EVAP	Open Malfunction	P0441
	Close Malfunction	P0441 and P0442 and P0446
VSV for CCV	Open Malfunction	P0441 and P0442 and P0446
	Close Malfunction	P0446
VSV for Pressure Switching	Open Malfunction	P0446
	Close Malfunction	P0441 and P0442 and P0446

*1: ECM may output some other DTC combination.

WIRING DIAGRAM

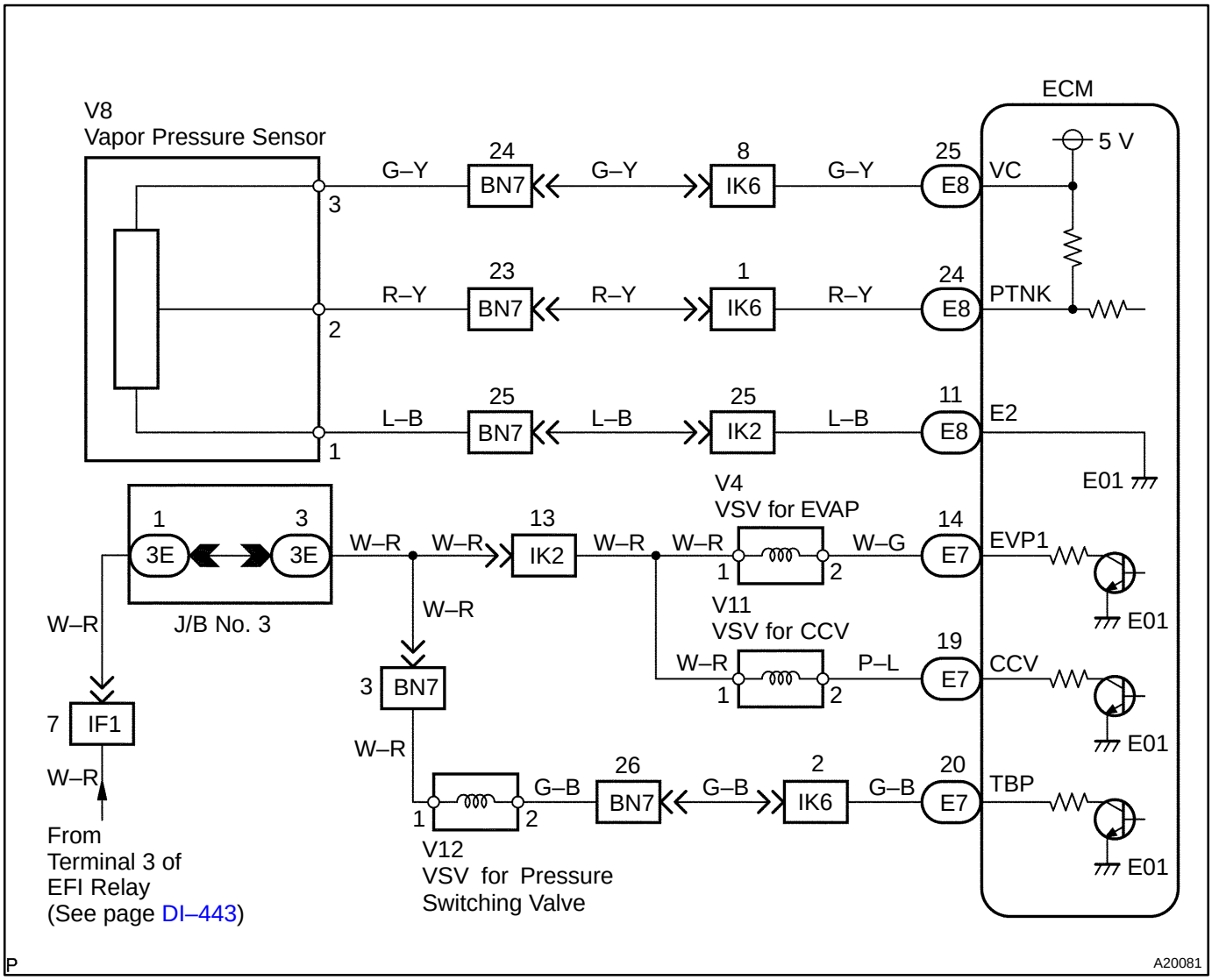

INSPECTION PROCEDURE

HINT:

- If DTC P0441 (Purge Flow), P0446 (VSV for CCV or VSV for Pressure switching valve), P0451, P0452 or P0453 (Evaporative Pressure Sensor) is output with DTC P0442 or P0456, first troubleshoot DTC P0441, P0446, P0451, P0452 or P0453. If no malfunction is detected, troubleshoot DTC P0442 or P0456 next.
- Read freeze frame data using the OBD II scan tool or the hand–held tester. Because freeze frame records the engine conditions when a malfunction is detected. When troubleshooting, it is useful for determining whether the vehicle was running or stopped, the engine was warmed up or not, the air–fuel ratio was lean or rich, etc. at the time of the malfunction.
- When the ENGINE RUN TIME in the freeze frame data is less than 200 seconds, carefully check the vapor pressure sensor.

Hand–held tester:

1	**Perform EVAP leak test.**

PREPARATION:

(a) Connect the hand–held tester to the DLC3.
(b) Select the item ”DIAGNOSIS/ENHANCED OBD II/SYSTEM CHECK/EVAP SYS CHECK (or EVAP LEAK TEST)” mode on the hand–held tester.
(c) Perform ”EVAP SYS CHECK (or EVAP LEAK TEST)”.

CHECK:

Display on the Hand–held tester	Proceed to
Scan tool detects a leak on the fuel tank side.	A
Scan tool detects a leak on the canister side.	B
Scan tool doesn’t detects a leak on the EVAP system.	C

If any changes do not occur with in 1 minute after pressing ”EVAP LEAK TEST”, once remove the fuel tank cap, then set the fuel tank cap again. Then perform the ”EVAP LEAK TEST”.

B → **Go to step 24.**

C → **Go to step 42.**

A

2	**Check that fuel tank cap is TOYOTA genuine parts.**

NG → **Replace to TOYOTA genuine parts.**

OK

3	**Check that fuel tank cap is correctly installed.**

NG → **Correctly install fuel tank cap.**

OK

4	**Check fuel tank cap (See page EC–6).**

NG → **Replace fuel tank cap.**

OK

5	**Check filler neck for damage.**

PREPARATION:
Remove the fuel tank cap.
CHECK:
Visually inspect the filler neck for damage.

NG → **Replace filler pipe.**

OK

6	**Check purge flow.**

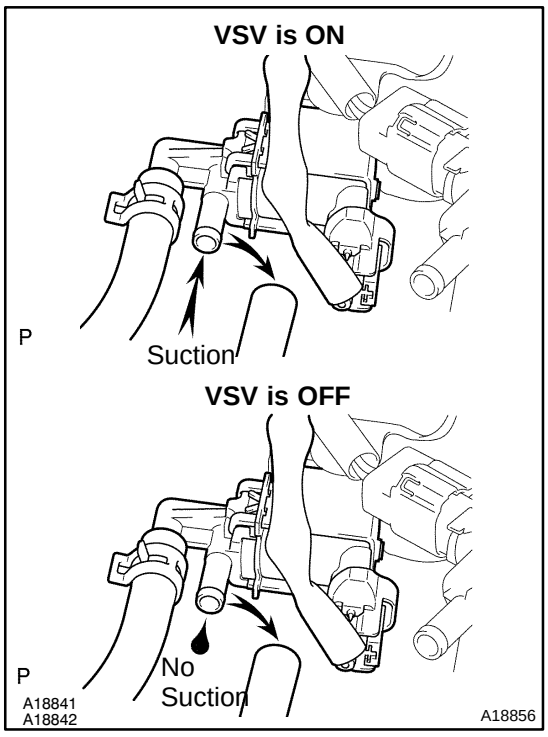

PREPARATION:
(a) Connect the hand–held tester to the DLC3.
(b) Select the item ”DIAGNOSIS/ENHANCED OBD II/ACTIVE TEST” mode on the hand–held tester.
(c) Disconnect the vacuum hose for the VSV for the EVAP from the charcoal canister.
(d) Start the engine.
(e) Select the item ”EVAP VSV (ALON)/ALL” in the ACTIVE TEST and operate EVAP VSV (Press the ← or → button).

CHECK:
When the VSV for the EVAP is operated by the hand–held tester, check whether the disconnected hose applies suction to your finger.

OK:

VSV is ON:
Disconnected hose applies suction to your finger.
VSV is OFF:
Disconnected hose applies no suction to your finger.

OK	Go to step 10.

NG

7	**Check vacuum hose between intake manifold and VSV for EVAP, and VSV for EVAP and charcoal canister.**

CHECK:

(a) Check that the vacuum hose is connected correctly.
(b) Check the vacuum hose for looseness and disconnection.
(c) Check the vacuum hose for cracks, hole, damage and blockage.

NG	Repair or replace.

OK

8	**Check operation of VSV for EVAP (See page SF–49).**

NG	Replace VSV for EVAP.

OK

9	**Check for open and short in harness and connector between EFI main relay (Marking: EFI) and VSV for EVAP, and VSV for EVAP and ECM (See page IN–28).**

NG	Repair or replace harness or connector.

OK

Check and replace ECM (See page IN–28).

10	Check VSV for CCV.

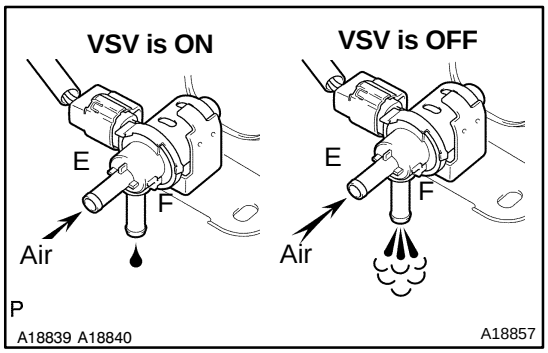

PREPARATION:

(a) Disconnect the vacuum hose for the VSV for the CCV from the charcoal canister.
(b) Turn the ignition switch ON and push the hand–held tester main switch ON.
(c) Select the item ”DIAGNOSIS/ENHANCED OBD II/ACTIVE TEST” mode on the hand–held tester.
(d) Select the item ”INTAKE CTL VSV/ALL” in the ACTIVE TEST and operate INTAKE CTL VSV (Press the ← or → button).

CHECK:

Check the VSV operation when it is operated by the hand–held tester.

OK:

VSV is ON:
Air does not flow from port E to port F.
VSV is OFF:
Air from port E flows out through port F.

OK	Go to step 14.

NG

11	Check vacuum hose between VSV for CCV and charcoal canister.

CHECK:

(a) Check that the vacuum hose is connected correctly.
(b) Check the vacuum hose for looseness and disconnection.
(c) Check the vacuum hose for cracks, hole damage, and blockage.

NG	Repair or replace.

OK

12	Check operation of VSV for CCV (See page SF–50).

NG	Replace VSV for CCV.

OK

13	**Check for open and short in harness and connector between EFI main relay (Marking: EFI) and VSV for CCV, and VSV for CCV and ECM (See page IN–28).**

NG → **Repair or replace harness or connector.**

OK

Check and replace ECM (See page IN–28).

14	**Check VSV for pressure switching valve.**

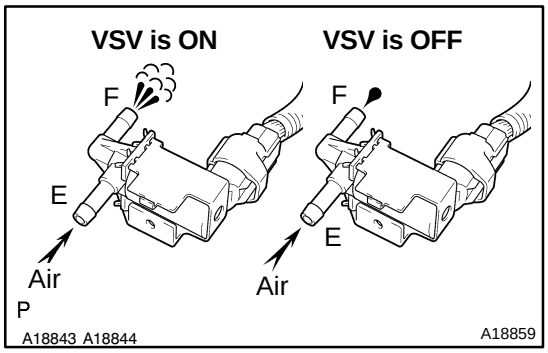

PREPARATION:

(a) Turn the ignition switch ON and push the hand–held tester main switch ON.

(b) Select the item "DIAGNOSIS/ENHANCED OBD II/ACTIVE TEST" mode on the hand–held tester.

(c) Select the item "TANK BYPASS VSV/ALL" in the ACTIVE TEST and operate TANK BYPASS VSV (Press the ← or → button).

CHECK:

Check the VSV operation when it is operated by the hand–held tester.

OK:

VSV is ON:
Air from port E flows out through port F.
VSV is OFF:
Air does not flow from port E to port F.

OK → **Go to step 17.**

NG

15	**Check operation of VSV for pressure switching valve (See page SF–52).**

NG → **Replace VSV for pressure switching valve.**

OK

16	**Check for open and short in harness and connector between EFI main relay (Marking: EFI) and VSV for pressure switching valve, and VSV for pressure switching valve and ECM (See page IN–28).**

NG → **Repair or replace harness or connector.**

OK

Check and replace ECM (See page IN–28).

17	**Check whether hose close to fuel tank have been modified, and check whether there are signs of any accident near fuel tank.**

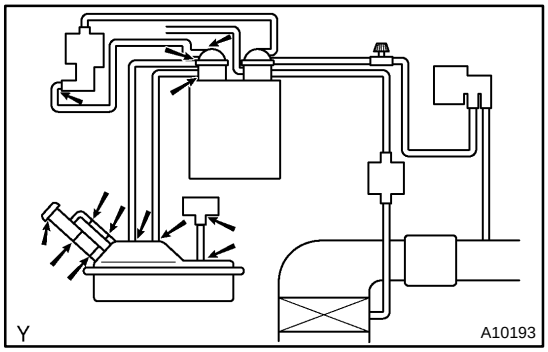

CHECK:

Check for cracks, deformation and loose connection of the following parts:

- Fuel tank
- Fuel tank filler pipe
- Hoses and tubes around fuel tank

NG → **Repair or replace.**

OK

18	**Check vacuum hoses between vapor pressure sensor and fuel tank, and charcoal canister and VSV for pressure switching valve.**

CHECK:

(a) Check that the vacuum hose is connected correctly.
(b) Check the vacuum hose for looseness and disconnection.
(c) Check the vacuum hose for cracks, hole and damage.

NG → **Repair or replace.**

OK

19	Check hose and tube between fuel tank and charcoal canister.

CHECK:

(a) Check for proper connection of the fuel tank and fuel evap pipe (See page EC–6), fuel evap pipe and fuel tube under the floor, fuel tube under the floor and charcoal canister.

(b) Check the hose and tube for cracks, hole and damage.

NG → **Repair or replace.**

OK

20	Check voltage between terminals VC and E2 of ECM connector.

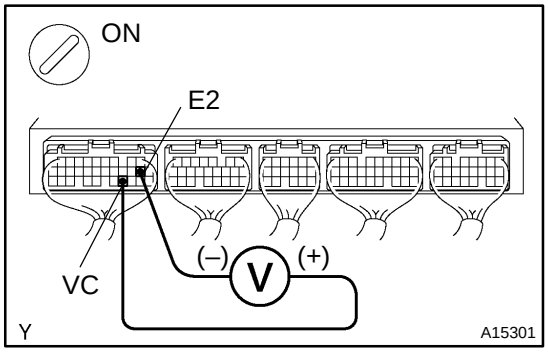

CHECK:

(a) Remove the grove compartment (See page SF–63).

(b) Turn the ignition switch ON.

CHECK:

Measure the voltage between terminals VC and E2 of the ECM connector.

OK:

Voltage: 4.5 – 5.5 V

NG → **Check and replace ECM (See page IN–28).**

OK

21	Check voltage between terminals PTNK and E2 of ECM connectors.

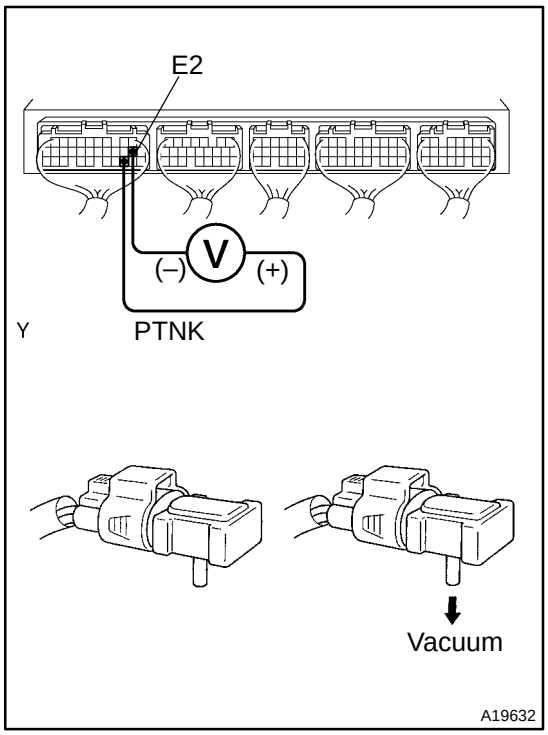

PREPARATION:

(a) Remove the grove compartment (See page SF–63).

(b) Turn the ignition switch ON.

CHECK:

Measure the voltage between terminals PTNK and E2 of the ECM connectors.

(1) Disconnect the vacuum hose from the vapor pressure sensor.

(2) Using the MITYVAC (Hand–held Vacuum Pump), apply a vacuum of 4.0 kPa (30 mmHg, 1.18 in.Hg) to the vapor pressure sensor.

NOTICE:

The vacuum applied to the vapor pressure sensor must be less than 66.7 kPa (500 mmHg, 19.7 in.Hg).

OK:

(1) Voltage: 2.9 – 3.7 V

(2) Voltage: 0.5 V or less

OK	Go to step 23.

NG

22	Check for open and short in harness and connector between vapor pressure sensor and ECM (See page IN–28).

NG	Repair or replace harness or connector.

OK

Replace vapor pressure sensor.

23	**Check fuel tank over fill check valve for cracks and damage.**

NG → **Replace fuel tank over fill check valve.**

OK

Check and replace fuel tank.

24	**Check purge flow.**

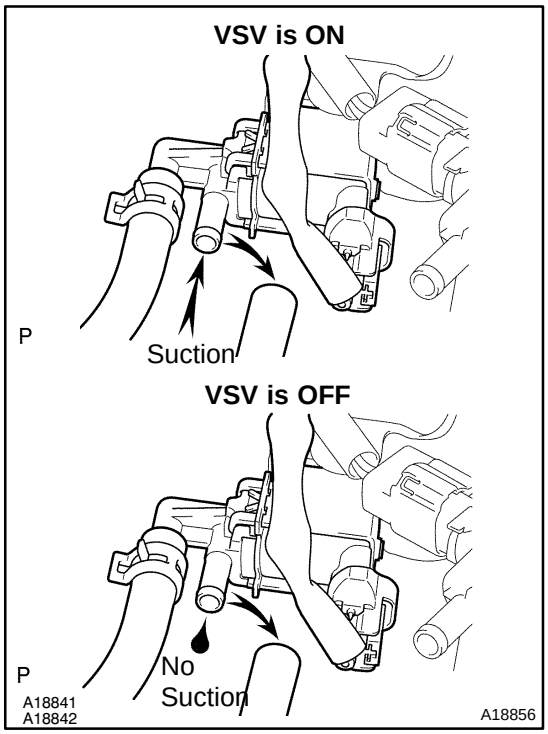

PREPARATION:

(a) Connect the hand–held tester to the DLC3.
(b) Select the item ”DIAGNOSIS/ENHANCED OBD II/ACTIVE TEST” mode on the hand–held tester.
(c) Disconnect the vacuum hose for the VSV for the EVAP from the charcoal canister.
(d) Start the engine.
(e) Select the item ”EVAP VSV (ALON)/ALL” in the ACTIVE TEST and operate EVAP VSV (Press the ← or → button).

CHECK:

When the VSV for the EVAP is operated by the hand–held tester, check whether the disconnected hose applies suction to your finger.

OK:

VSV is ON:
Disconnected hose applies suction to your finger.
VSV is OFF:
Disconnected hose applies no suction to your finger.

OK → **Go to step 28.**

NG

25	**Check vacuum hose between intake manifold and VSV for EVAP, and VSV for EVAP and charcoal canister.**

CHECK:

(a) Check that the vacuum hose is connected correctly.
(b) Check the vacuum hose for looseness and disconnection.
(c) Check the vacuum hose for cracks, hole, damage and blockage.

NG → **Repair or replace.**

OK

26	**Check operation of VSV for EVAP (See page SF–49).**

NG → **Replace VSV for EVAP.**

OK

27	**Check for open and short in harness and connector between EFI main relay (Marking: EFI) and VSV for EVAP, and VSV for EVAP and ECM (See page IN–28).**

NG → **Repair or replace harness or connector.**

OK

Check and replace ECM (See page IN–28).

28	Check VSV for CCV.

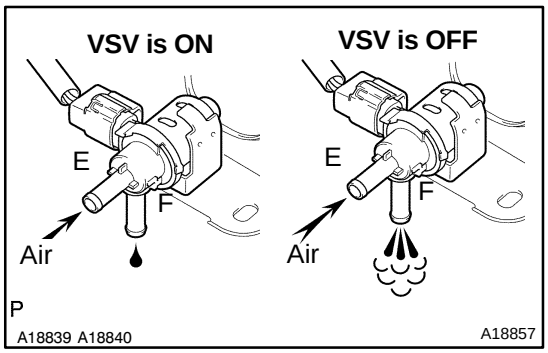

PREPARATION:

(a) Disconnect the vacuum hose for the VSV for the CCV from the charcoal canister.
(b) Turn the ignition switch ON and push the hand–held tester main switch ON.
(c) Select the item ”DIAGNOSIS/ENHANCED OBD II/ACTIVE TEST” mode on the hand–held tester.
(d) Select the item ”INTAKE CTL VSV/ALL” in the ACTIVE TEST and operate INTAKE CTL VSV (Press the ← or → button).

CHECK:

Check the VSV operation when it is operated by the hand–held tester.

OK:

VSV is ON:
Air does not flow from port E to port F.
VSV is OFF:
Air from port E flows out through port F.

OK	Go to step 32.

NG

29	Check vacuum hose between VSV for CCV and charcoal canister.

CHECK:

(a) Check that the vacuum hose is connected correctly.
(b) Check the vacuum hose for looseness and disconnection.
(c) Check the vacuum hose for cracks, hole damage, and blockage.

NG	Repair or replace.

OK

30	Check operation of VSV for CCV (See page SF–50).

NG	Replace VSV for CCV.

OK

31	**Check for open and short in harness and connector between EFI main relay (Marking: EFI) and VSV for CCV, and VSV for CCV and ECM (See page IN–28).**

NG → **Repair or replace harness or connector.**

OK

Check and replace ECM (See page IN–28).

32	**Check VSV for pressure switching valve.**

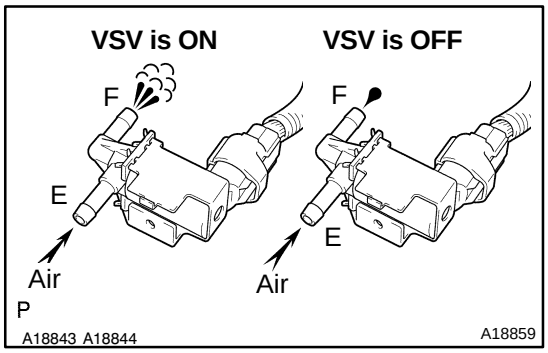

PREPARATION:

(a) Turn the ignition switch ON and push the hand–held tester main switch ON.

(b) Select the item "DIAGNOSIS/ENHANCED OBD II/ACTIVE TEST" mode on the hand–held tester.

(c) Select the item "TANK BYPASS VSV/ALL" in the ACTIVE TEST and operate TANK BYPASS VSV (Press the ← or → button).

CHECK:

Check the VSV operation when it is operated by the hand–held tester.

OK:

VSV is ON:
Air from port E flows out through port F.
VSV is OFF:
Air does not flow from port E to port F.

OK → **Go to step 35.**

NG

33	**Check operation of VSV for pressure switching valve (See page SF–52).**

NG → **Replace VSV for pressure switching valve.**

OK

34	**Check for open and short in harness and connector between EFI main relay (Marking: EFI) and VSV for pressure switching valve, and VSV for pressure switching valve and ECM (See page IN–28).**

NG → **Repair or replace harness or connector.**

OK

Check and replace ECM (See page IN–28).

35	**Check whether there are signs of any accident near charcoal canister.**

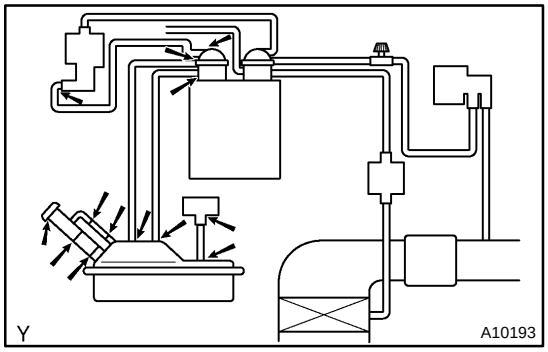

CHECK:

Check for cracks, deformation and loose connection of the following parts:

- Charcoal canister
- Hoses and tubes around charcoal canister

NG → **Repair or replace.**

OK

36	**Check vacuum hoses ((4), (5), (7) and (8) in Fig. 1 in description).**

CHECK:

(a) Check that the vacuum hose is connected correctly.
(b) Check the vacuum hose for looseness and disconnection.
(c) Check the vacuum hose for cracks, hole and damage.

NG → **Repair or replace.**

OK

37	Check hose and tube between fuel tank and charcoal canister.

CHECK:

(a) Check for proper connection of the fuel tank and fuel evap pipe (See page EC–6), fuel evap pipe and fuel tube under the floor, fuel tube under the floor and charcoal canister.

(b) Check the hose and tube for cracks, hole and damage.

NG → **Repair or replace.**

OK

38	Check charcoal canister for cracks, hole and damage (See page EC–6).

NG → **Repair or replace.**

OK

39	Check voltage between terminals VC and E2 of ECM connector.

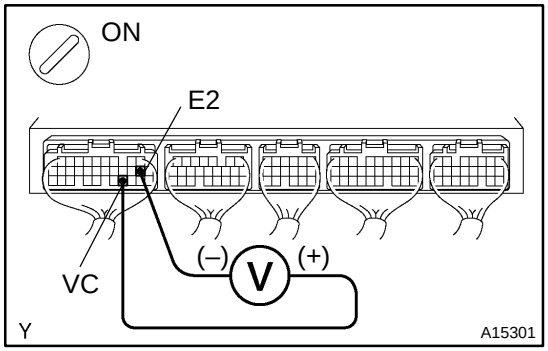

CHECK:

(a) Remove the grove compartment (See page SF–63).

(b) Turn the ignition switch ON.

CHECK:

Measure the voltage between terminals VC and E2 of the ECM connector.

OK:

Voltage: 4.5 – 5.5 V

NG → **Check and replace ECM (See page IN–28).**

OK

40	Check voltage between terminals PTNK and E2 of ECM connectors.

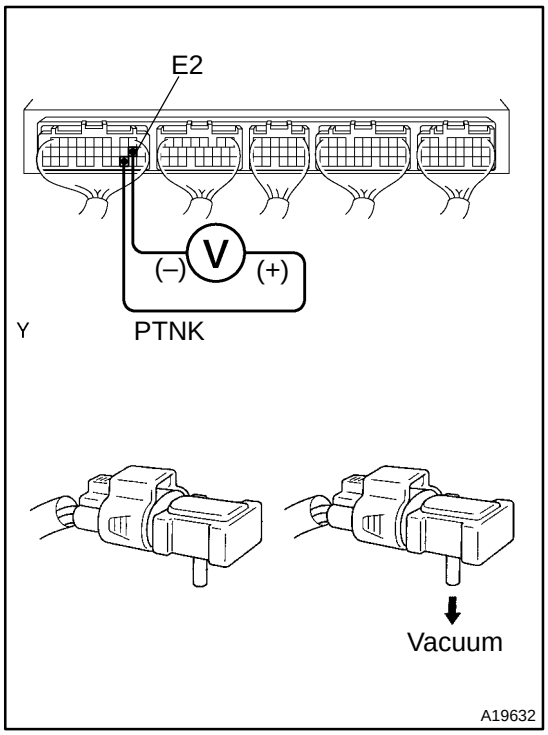

PREPARATION:

(a) Remove the grove compartment (See page SF–63).

(b) Turn the ignition switch ON.

CHECK:

Measure the voltage between terminals PTNK and E2 of the ECM connectors.

(1) Disconnect the vacuum hose from the vapor pressure sensor.

(2) Using the MITYVAC (Hand–held Vacuum Pump), apply a vacuum of 4.0 kPa (30 mmHg, 1.18 in.Hg) to the vapor pressure sensor.

NOTICE:

The vacuum applied to the vapor pressure sensor must be less than 66.7 kPa (500 mmHg, 19.7 in.Hg).

OK:

(1) Voltage: 2.9 – 3.7 V

(2) Voltage: 0.5 V or less

OK	Check and replace ECM (See page IN–28).

NG

41	Check for open and short in harness and connector between vapor pressure sensor and ECM (See page IN–28).

NG	Repair or replace harness or connector.

OK

Replace vapor pressure sensor.

42	Check purge flow.

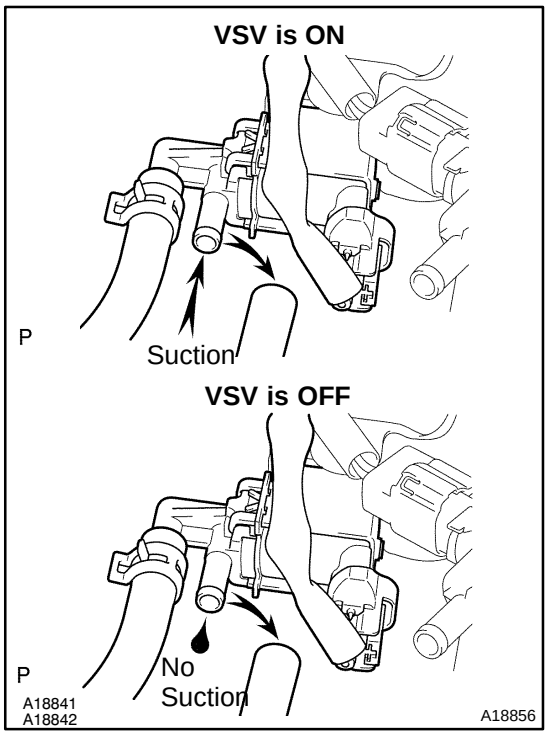

PREPARATION:

(a) Connect the hand–held tester to the DLC3.
(b) Select the item ”DIAGNOSIS/ENHANCED OBD II/ACTIVE TEST” mode on the hand–held tester.
(c) Disconnect the vacuum hose for the VSV for the EVAP from the charcoal canister.
(d) Start the engine.
(e) Select the item ”EVAP VSV (ALON)/ALL” in the ACTIVE TEST and operate EVAP VSV (Press the ← or → button).

CHECK:

When the VSV for the EVAP is operated by the hand–held tester, check whether the disconnected hose applies suction to your finger.

OK:

VSV is ON:
Disconnected hose applies suction to your finger.
VSV is OFF:
Disconnected hose applies no suction to your finger.

OK	Go to step 46.

NG

43	Check vacuum hose between intake manifold and VSV for EVAP, and VSV for EVAP and charcoal canister.

CHECK:

(a) Check that the vacuum hose is connected correctly.
(b) Check the vacuum hose for looseness and disconnection.
(c) Check the vacuum hose for cracks, hole, damage and blockage.

NG	Repair or replace.

OK

44	Check operation of VSV for EVAP (See page SF–49).

NG	Replace VSV for EVAP.

OK

45	**Check for open and short in harness and connector between EFI main relay (Marking: EFI) and VSV for EVAP, and VSV for EVAP and ECM (See page IN–28).**

NG → **Repair or replace harness or connector.**

OK

Check and replace ECM (See page IN–28).

46	**Check VSV for CCV.**

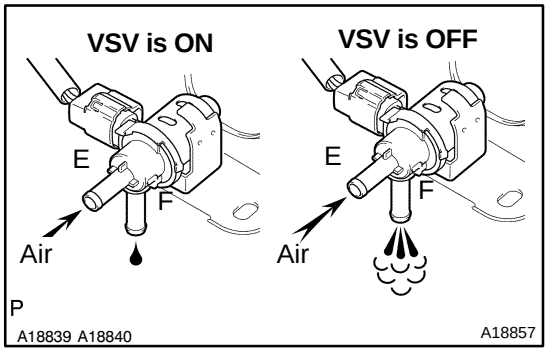

PREPARATION:

(a) Disconnect the vacuum hose for the VSV for the CCV from the charcoal canister.

(b) Turn the ignition switch ON and push the hand–held tester main switch ON.

(c) Select the item ”DIAGNOSIS/ENHANCED OBD II/ACTIVE TEST” mode on the hand–held tester.

(d) Select the item ”INTAKE CTL VSV/ALL” in the ACTIVE TEST and operate INTAKE CTL VSV (Press the ← or → button).

CHECK:

Check the VSV operation when it is operated by the hand–held tester.

OK:

VSV is ON:
Air does not flow from port E to port F.
VSV is OFF:
Air from port E flows out through port F.

OK → **Go to step 50.**

NG

47	**Check vacuum hose between VSV for CCV and charcoal canister.**

CHECK:

(a) Check that the vacuum hose is connected correctly.
(b) Check the vacuum hose for looseness and disconnection.
(c) Check the vacuum hose for cracks, hole damage, and blockage.

NG → **Repair or replace.**

OK

48	**Check operation of VSV for CCV (See page SF–50).**

NG → **Replace VSV for CCV.**

OK

49	**Check for open and short in harness and connector between EFI main relay (Marking: EFI) and VSV for CCV, and VSV for CCV and ECM (See page IN–28).**

NG → **Repair or replace harness or connector.**

OK

Check and replace ECM (See page IN–28).

50	Check VSV for pressure switching valve.

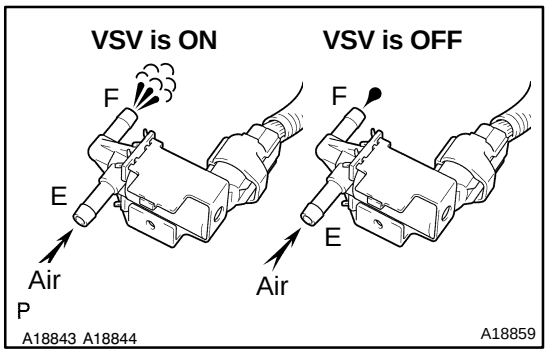

PREPARATION:

(a) Turn the ignition switch ON and push the hand–held tester main switch ON.

(b) Select the item ”DIAGNOSIS/ENHANCED OBD II/ACTIVE TEST” mode on the hand–held tester.

(c) Select the item ”TANK BYPASS VSV/ALL” in the ACTIVE TEST and operate TANK BYPASS VSV (Press the ← or → button).

CHECK:

Check the VSV operation when it is operated by the hand–held tester.

OK:

VSV is ON:
Air from port E flows out through port F.
VSV is OFF:
Air does not flow from port E to port F.

OK	Go to step 53.

NG

51	Check operation of VSV for pressure switching valve (See page SF–52).

NG	Replace VSV for pressure switching valve.

OK

52	Check for open and short in harness and connector between EFI main relay (Marking: EFI) and VSV for pressure switching valve, and VSV for pressure switching valve and ECM (See page IN–28).

NG	Repair or replace harness or connector.

OK

Check and replace ECM (See page IN–28).

53	Check whether hose close to fuel tank have been modified, and check whether there are signs of any accident near fuel tank or charcoal canister.

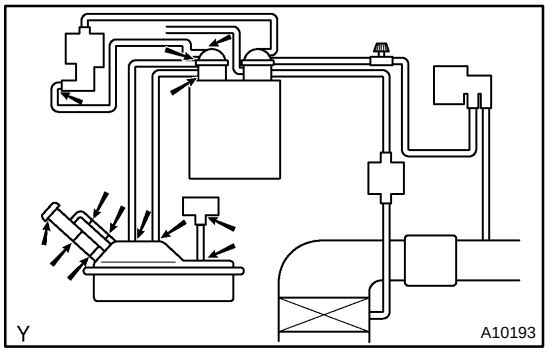

CHECK:

Check for cracks, deformation and loose connection of the following parts:

- Fuel tank
- Charcoal canister
- Fuel tank filler pipe
- Hoses and tubes around fuel tank and charcoal canister

NG → **Repair or replace.**

OK

54	Check vacuum hoses between vapor pressure sensor and fuel tank, and charcoal canister and VSV for pressure switching valve.

CHECK:

(a) Check that the vacuum hose is connected correctly.
(b) Check the vacuum hose for looseness and disconnection.
(c) Check the vacuum hose for cracks, hole and damage.

NG → **Repair or replace.**

OK

55	Check vacuum hoses ((4), (5), (7) and (8) in Fig. 1 in description).

CHECK:

(a) Check that the vacuum hose is connected correctly.
(b) Check the vacuum hose for looseness and disconnection.
(c) Check the vacuum hose for cracks, hole and damage.

NG → **Repair or replace.**

OK

56	Check voltage between terminals VC and E2 of ECM connector.

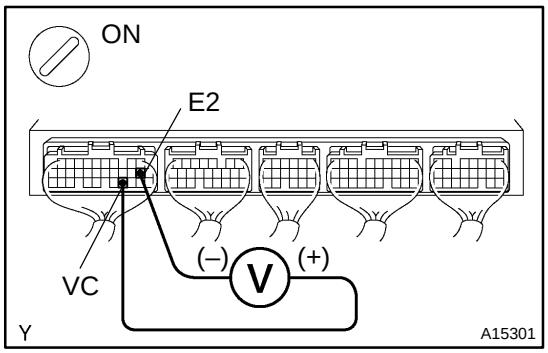

CHECK:

(a) Remove the grove compartment (See page SF–63).

(b) Turn the ignition switch ON.

CHECK:

Measure the voltage between terminals VC and E2 of the ECM connector.

OK:

Voltage: 4.5 – 5.5 V

NG	Check and replace ECM (See page IN–28).

OK

57	Check voltage between terminals PTNK and E2 of ECM connectors.

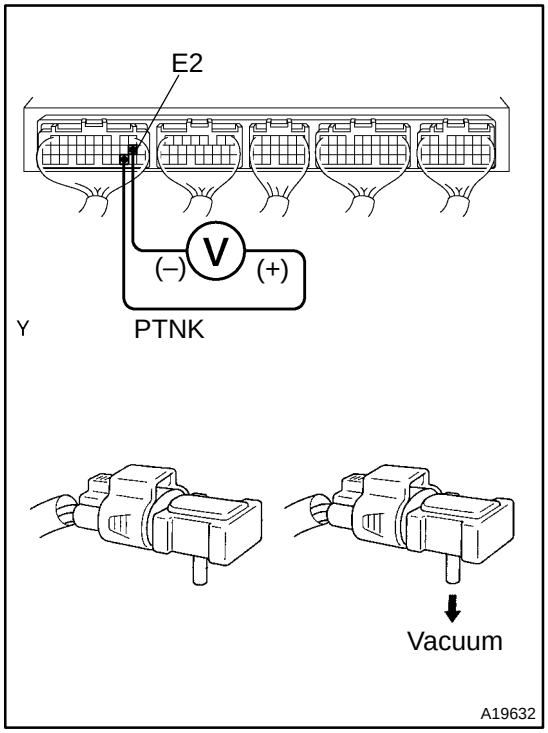

PREPARATION:

(a) Remove the grove compartment (See page SF–63).

(b) Turn the ignition switch ON.

CHECK:

Measure the voltage between terminals PTNK and E2 of the ECM connectors.

(1) Disconnect the vacuum hose from the vapor pressure sensor.

(2) Using the MITYVAC (Hand–held Vacuum Pump), apply a vacuum of 4.0 kPa (30 mmHg, 1.18 in.Hg) to the vapor pressure sensor.

NOTICE:

The vacuum applied to the vapor pressure sensor must be less than 66.7 kPa (500 mmHg, 19.7 in.Hg).

OK:

(1) Voltage: 2.9 – 3.7 V

(2) Voltage: 0.5 V or less

NG	Check and replace ECM (See page IN–28).

OK

58	Check for open and short in harness and connector between vapor pressure sensor and ECM (See page IN–28).

NG → Repair or replace harness or connector.

OK →

Replace vapor pressure sensor.

OBD II scan tool (excluding hand–held tester):

1	Check that fuel tank cap is TOYOTA genuine parts.

NG → Replace to TOYOTA genuine parts.

OK →

2	Check that fuel tank cap is correctly installed.

NG → Correctly install fuel tank cap.

OK →

3	Check fuel tank cap (See page EC–6).

NG → Replace fuel tank cap.

OK →

4	**Check filler neck for damage.**

PREPARATION:
Remove the fuel tank cap.
CHECK:
Visually inspect the filler neck for damage.

NG → **Replace filler pipe.**

OK

5	**Check whether hose close to fuel tank have been modified, and check whether there are signs of any accident near fuel tank or charcoal canister.**

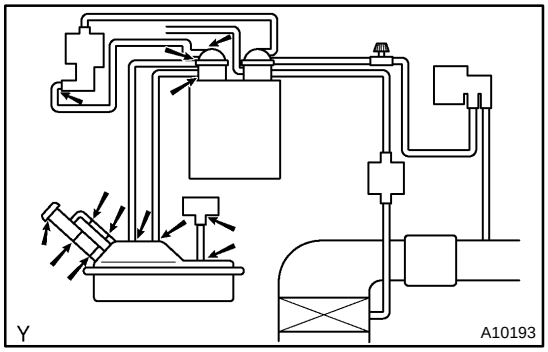

CHECK:
Check for cracks, deformation and loose connection of the following parts:

- Fuel tank
- Charcoal canister
- Fuel tank filler pipe
- Hoses and tubes around fuel tank and charcoal canister

NG → **Repair or replace.**

OK

6	**Check vacuum hoses between vapor pressure sensor and fuel tank, charcoal canister and VSV for pressure switching valve, and VSV for pressure switching valve and charcoal canister.**

CHECK:
(a) Check that the vacuum hose is connected correctly.
(b) Check the vacuum hose for looseness and disconnection.
(c) Check the vacuum hose for cracks, hole and damage.

NG → **Repair or replace.**

OK

7	**Check hose and tube between fuel tank and charcoal canister.**

CHECK:

(a) Check for proper connection of the fuel tank and fuel evap pipe (See page EC–6), fuel evap pipe and fuel tube under the floor, fuel tube under the floor and charcoal canister.

(b) Check the hose and tube for cracks, hole and damage.

NG → **Repair or replace.**

OK

8	**Check vacuum hoses ((5), (6), (7), (8) and (9) in Fig. 1 in circuit description).**

CHECK:

(a) Check that the vacuum hose is connected correctly.

(b) Check the vacuum hose for looseness and disconnection.

(c) Check the vacuum hose for cracks, hole damage, and blockage.

NG → **Repair or replace.**

OK

9	**Check VSV connector for EVAP, VSV connector for CCV, VSV connector for pressure switching valve and vapor pressure sensor connector for looseness and disconnection.**

NG → **Repair or connect VSV or sensor connector.**

OK

10	**Check charcoal canister for cracks, hole and damage (See page EC–6).**

NG → **Replace charcoal canister.**

OK

11	Check voltage between terminals VC and E2 of ECM connector.

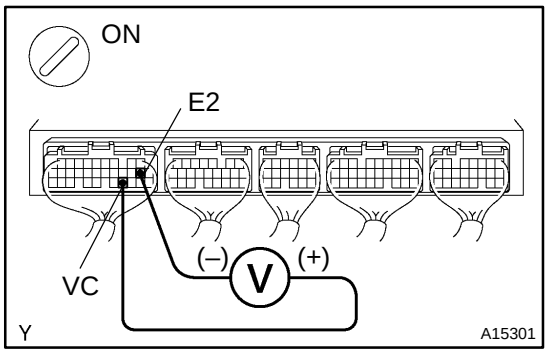

CHECK:

(a) Remove the grove compartment (See page SF–63).

(b) Turn the ignition switch ON.

CHECK:

Measure the voltage between terminals VC and E2 of the ECM connector.

OK:

Voltage: 4.5 – 5.5 V

NG	Check and replace ECM (See page IN–28).

OK

12	Check voltage between terminals PTNK and E2 of ECM connectors.

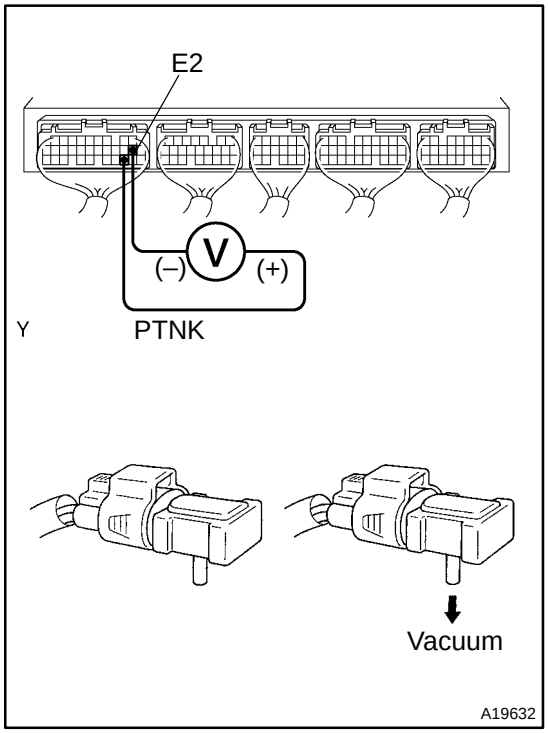

PREPARATION:

(a) Remove the grove compartment (See page SF–63).

(b) Turn the ignition switch ON.

CHECK:

Measure the voltage between terminals PTNK and E2 of the ECM connectors.

(1) Disconnect the vacuum hose from the vapor pressure sensor.

(2) Using the MITYVAC (Hand–held Vacuum Pump), apply a vacuum of 4.0 kPa (30 mmHg, 1.18 in.Hg) to the vapor pressure sensor.

NOTICE:

The vacuum applied to the vapor pressure sensor must be less than 66.7 kPa (500 mmHg, 19.7 in.Hg).

OK:

(1) Voltage: 2.9 – 3.7 V

(2) Voltage: 0.5 V or less

OK	Go to step 14.

NG

13	**Check for open and short in harness and connector between vapor pressure sensor and ECM (See page IN–28).**

NG → **Repair or replace harness or connector.**

OK

Replace vapor pressure sensor.

14	**Check VSV for EVAP.**

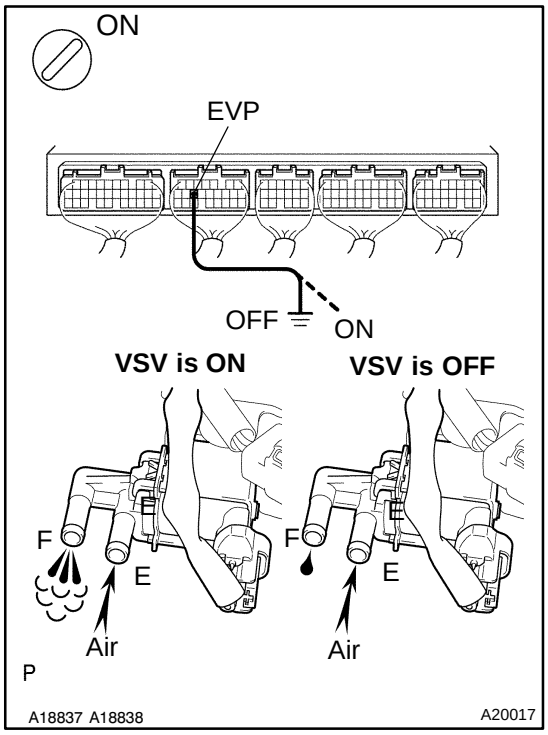

PREPARATION:

(a) Remove the glove compartment (See page SF–63).

(b) Turn the ignition switch ON.

CHECK:

Check the VSV function.

(1) Connect between terminal EVP of the ECM connector and body ground (ON).

(2) Disconnect between terminal EVP of the ECM connector and body ground (OFF).

OK:

(1) VSV is ON:
Air from port E flows out through port F.
(2) VSV is OFF:
Air does not flow from port E to port F.

OK → **Go to step 17.**

NG

15	**Check operation of VSV for EVAP (See page SF–49).**

NG → **Replace VSV for EVAP.**

OK

16	**Check for open and short in harness and connector between EFI main relay (Marking: EFI) and VSV for EVAP, and VSV for EVAP and ECM (See page IN–28).**

NG → **Repair or replace harness or connector.**

OK

Check and replace ECM (See page IN–28).

17	**Check VSV for CCV.**

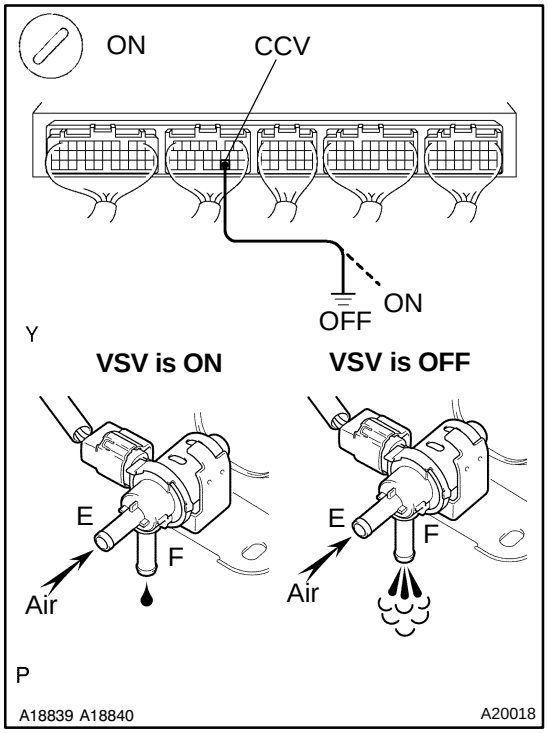

PREPARATION:

(a) Remove the grove compartment (See page SF–63).

(b) Turn the ignition switch ON.

CHECK:

Check the VSV function.

(1) Connect between terminal CCV of the ECM connector and body ground (ON).

(2) Disconnect between terminal CCV of the ECM connector and body ground (OFF).

OK:

VSV is ON:
Air does not flow from port E to port F.
VSV is OFF:
Air from port E flows out through port F.

OK → **Go to step 20.**

NG

18	**Check operation of VSV for CCV (See page SF–50).**

NG → **Replace VSV for CCV.**

OK

19	**Check for open and short in harness and connector between EFI main relay (Marking: EFI) and VSV for CCV, and VSV for CCV and ECM (See page IN–28).**

NG → **Repair or replace harness or connector.**

OK

Check and replace ECM (See page IN–28).

20	**Check VSV for pressure switching valve.**

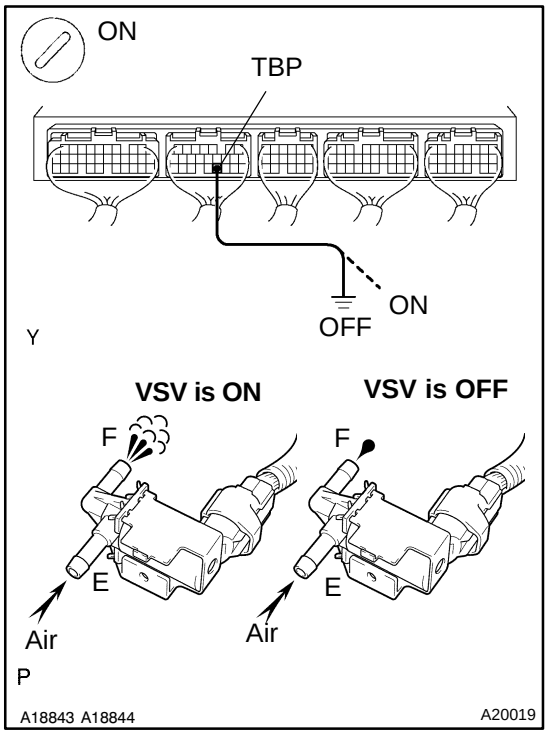

PREPARATION:

(a) Remove the grove compartment (See page SF–63).

(b) Turn the ignition switch ON.

CHECK:

Check the VSV function.

(1) Connect between terminal TBP of the ECM connector and body ground (ON).

(2) Disconnect between terminal TBP of the ECM connector and body ground (OFF).

OK:

(1) VSV is ON:
Air from port E flows out through port F.
(2) VSV is OFF:
Air does not from flow port E to port F.

OK → **Go to step 23.**

NG

21	**Check operation of VSV for pressure switching valve (See page SF–52).**

NG → **Replace VSV for pressure switching valve.**

OK

22	Check for open and short in harness and connector between EFI main relay (Marking: EFI) and VSV for pressure switching valve, and VSV for pressure switching valve and ECM (See page IN–28).

NG → Repair or replace harness or connector.

OK ↓

Check and replace ECM (See page IN–28).

23	Check the fuel tank over fill check valve (See page EC–6).

NG → Replace fuel tank over fill check valve.

OK ↓

24	Check the fuel tank.

NG → Replace fuel tank.

OK ↓

It is likely that vehicle user did not properly close fuel tank cap. Please explain to customer how to properly install fuel tank cap.

DTC	P0442	Evaporative Emission Control System Leak Detected (Small Leak)

DTC	P0456	Evaporative Emission Control System Leak Detected (Very Small Leak)

CIRCUIT DESCRIPTION

The vapor pressure sensor, VSV for EVAP, VSV for canister closed valve (CCV) and VSV for pressure switching valve are used to detect abnormalities in the evaporative emission control system.

The ECM decides whether there is an abnormality in the evaporative emission control system based on the vapor pressure sensor signal.

DTC P0442 or P0456 is recorded by the ECM when evaporative emissions leak from the components within the dotted line in Fig. 1 below, or when the vapor pressure sensor malfunctions.

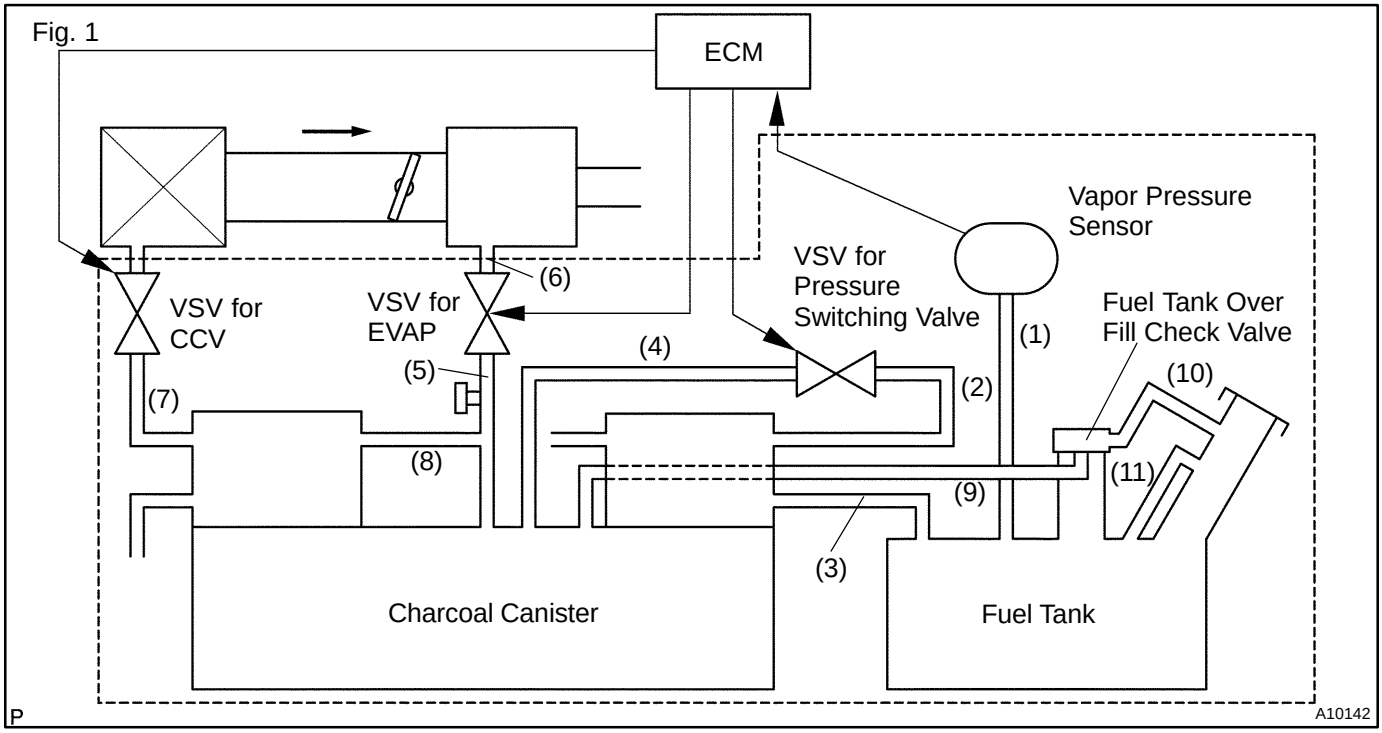

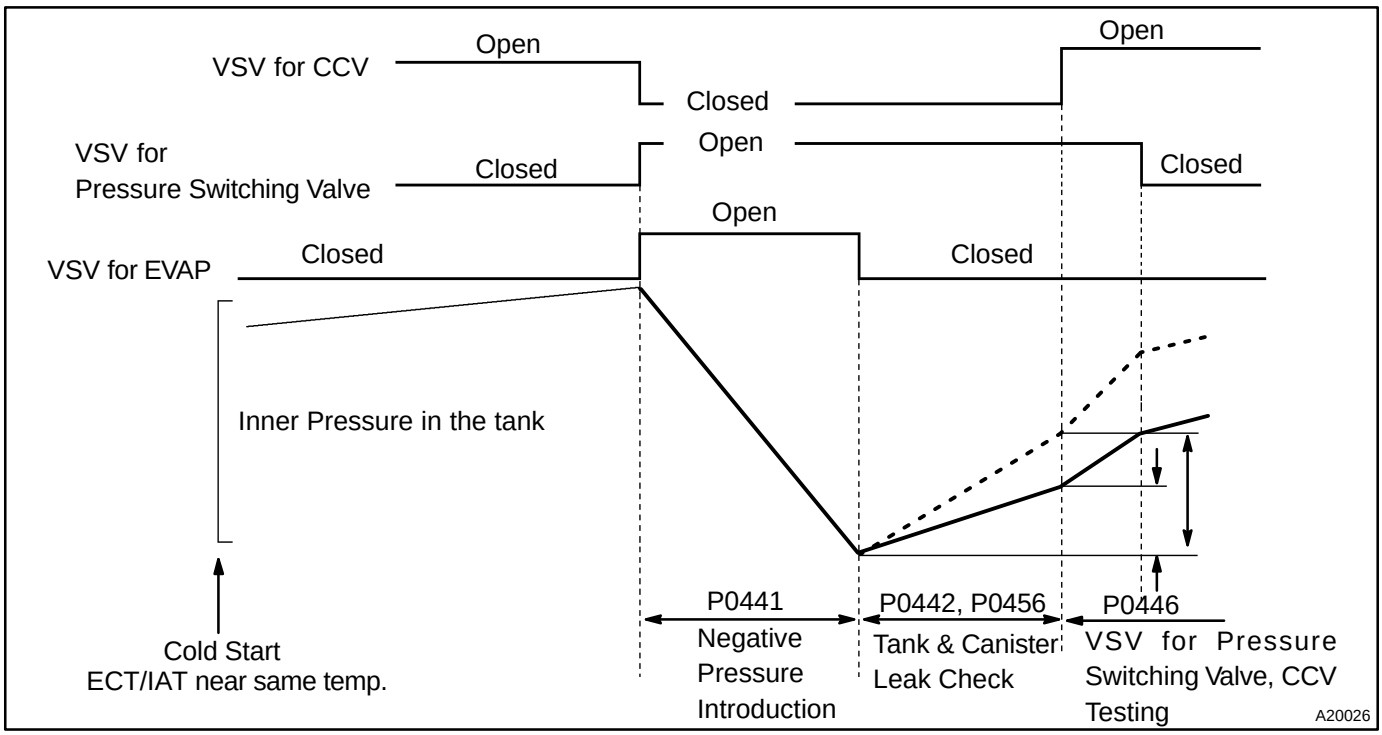

After purge operation, the VSV for EVAP is turned off sealing the vacuum in the system and the ECM begins to monitor the pressure increase. It is a normal if the increase in pressure is lower than the predict level. A very rapid, sharp increase in pressure indicates a leak in the EVAP system and sets the DTC P0442.
A pressure rise just above normal indicates a very small hole and will set the DTC P0456.

DTC No.	DTC Detecting Condition	Trouble Area
P0442 P0456	After cold engine start. After VSV for EVAP operation, the VSV for EVAP is turned off sealing the vacuum in the system and the ECM begins to monitor the pressure increase. Some increase is normal. A very rapid, sharp increase in pressure indicates a leak in the EVAP system and sets the DTC P0442. This monitoring method is also able to distinguish what is called the small leak detection.(DTC P0456) A pressure rise just above normal indicates a very small hole.	• Fuel tank cap incorrectly installed • Fuel tank cap cracked or damaged • Hose or tube cracked, hole, damaged or loose seal ((3) or (9) in Fig. 1) • Vacuum hose cracked, holed, blocked, damaged or disconnected ((1), (2), (4), (5), (6), (7), (8), (10)and (11) in Fig. 1) • Fuel tank cracked, holed or damaged • Charcoal canister cracked, holed or damaged • Open or short in vapor pressure sensor circuit • VSV for CCV • VSV for EVAP • VSV for pressure switching valve • Vapor pressure sensor • Fuel tank over fill check valve cracked or damaged • ECM

HINT:
Typical DTC output of each trouble part

Trouble part		Typical DTC output (*1)
Small Leak		P0442 and/or P0456
Medium Leak (ex: Vacuum hose loose)		P0442
Large Leak (ex: Fuel tank cap loose)		P0441 and P0442 and P0446
VSV for EVAP	Open Malfunction	P0441
	Close Malfunction	P0441 and P0442 and P0446
VSV for CCV	Open Malfunction	P0441 and P0442 and P0446
	Close Malfunction	P0446
VSV for Pressure Switching	Open Malfunction	P0446
	Close Malfunction	P0441 and P0442 and P0446

*1: ECM may output some other DTC combination.

WIRING DIAGRAM

Refer to DTC P0441 and P0446 on page DI–328.

CONFIRMATION READINESS TEST

First Trip Procedure

(a) Vehicle must be cold, ambient temperature approximately between 50˚F – 95˚F.

(b) Intake Air Temp. (IAT) and Engine Coolant Temp. (ECT) sensor almost same value.

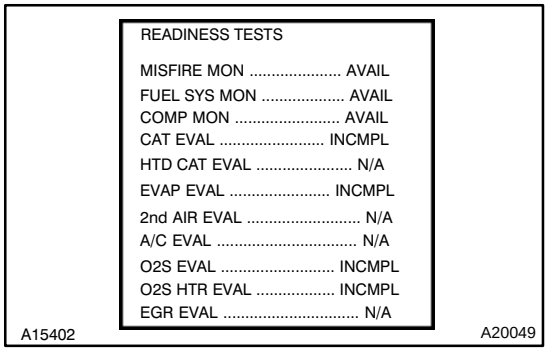

(c) Clear DTC's.
- Disconnecting the battery terminals or EFI fuse and ETCS fuse.
- Readiness tests will show INCMPL (incomplete).

(d) Drive the vehicle according to LA#4 drive cycle. Note the state of Readiness Tests. They will change to COMPL as the evaluation monitors operate and if the system passes. This procedure may take approximately 20 minutes or more.

NOTICE:

Do not shut off the engine – the results will be invalid.

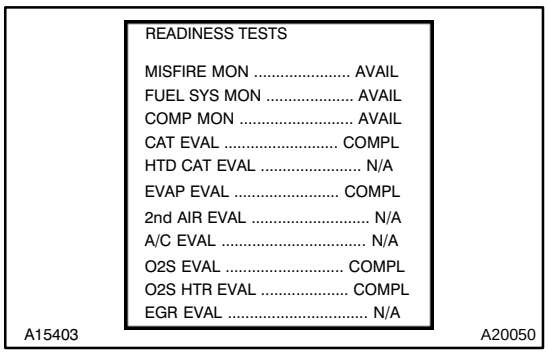

Pass Condition – No Problem Found by the ECM

If the EVAP evaluation monitor shows COMPL, go to the Non–Continuous Test screen.

NOTICE:

Do not shut off the engine – the results will be invalid.

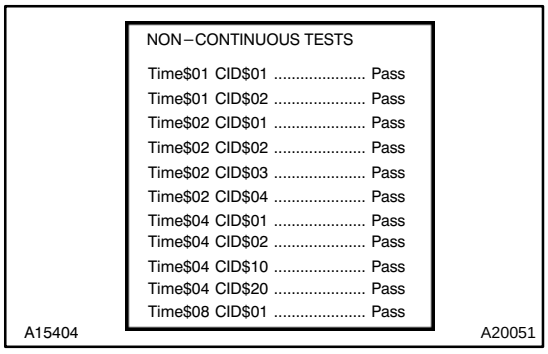

- To get there, go to Advanced OBD II, Onboard Tests, Non–continuous Tests.
- If all of the tests in the time $02 category Tests show Pass, the evaluation monitor has operated and no problem was detected.

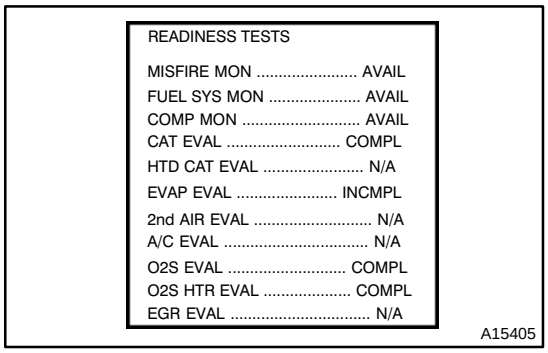

Fail Condition – Problem Detected by the ECM

If the EVAP evaluation monitor shows INCMPL, go to the Non–Continuous Test screen.

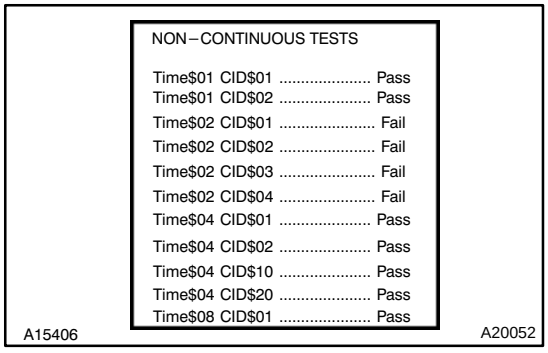

(1) If all Tests show Pass, the following may have occurred.
- The EVAP evaluation monitor did not operate.
- The EVAP evaluation monitor did not finish.
- The ECM withheld judgement.

(2) If one or more of the tests in the time $02 category show Fail, the EVAP evaluation monitor did operate and the ECM detected a problem.

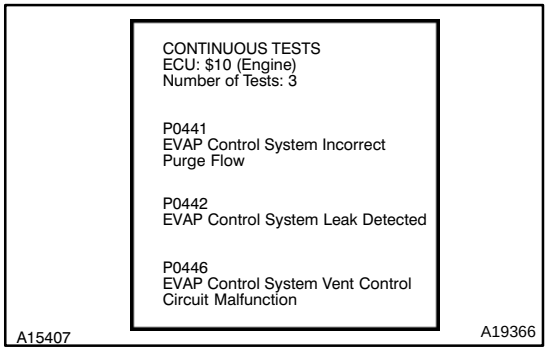

(3) Go to Continuous Tests screen. This is the only place DTC's are listed for the first trip.

NOTICE:

The DTC listed may not be valid. A second trip is needed to confirm the DTC.

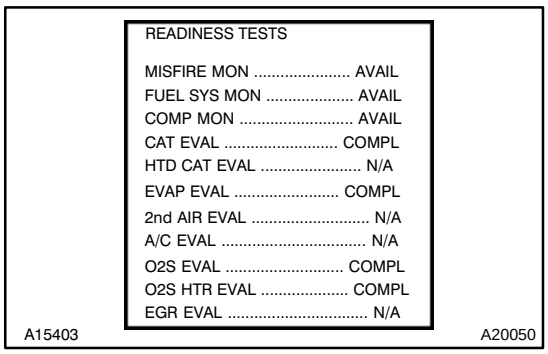

Second Trip Procedure

(a) Vehicle must be cold, ambient temperature approximately between 50°F – 95°F.

(b) Go to Readiness Tests screen.

(c) Drive the vehicle according to LA#4 drive cycle. Note the state of EVAP evaluation monitor. This procedure may take approximately 20 minutes or more.

NOTICE:

Do not shut off the engine – the results will be invalid.

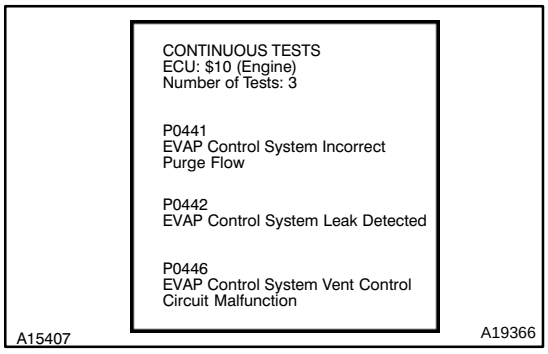

If Readiness Tests changes to COMPL, the EVAP evaluation monitor has operated. Check for any stored DTC's.

- If a DTC has stored, the problem has been detected and confirmed by the ECM.
- If no DTC was found, the EVAP monitor operated but no problem was detected.

INSPECTION PROCEDURE

HINT:

- If DTC P0441 (Purge Flow), P0446 (VSV for CCV or VSV for Pressure switching valve), P0451 P0452 or P0453 (Evaporative Pressure Sensor) is output with DTC P0442 or P0456, first troubleshoot DTC P0441, P0446, P0451. P0452 or P0453. If no malfunction is detected, troubleshoot DTC P0442 or P0456 next.
- Ask the customer whether, after the MIL came on, the customer found the fuel tank cap loose and tightened it. Also ask the customer whether the fuel tank cap was loose when refuelling. If the fuel tank cap was loose, it was the cause of the DTC. If the fuel tank cap was not loose or if the customer was not sure if it was loose, troubleshoot according to the following procedure.
- Read freeze frame data using OBD II scan tool or hand–held tester. Because freeze frame records the engine conditions when the malfunction is detected. When troubleshooting, it is useful for determining whether the vehicle was running or stopped, the engine was warmed up or not, the air–fuel ratio was lean or rich, etc. at the time of the malfunction.
- When the ENGINE RUN TIME in the freeze frame data is less than 200 seconds, carefully check the vapor pressure sensor.

Hand–held tester:

1	**Perform EVAP leak test.**

PREPARATION:

(a) Connect the hand–held tester to the DLC3.

(b) Select the item ”DIAGNOSIS/ENHANCED OBD II/SYSTEM CHECK/EVAP SYS CHECK (or EVAP LEAK TEST)” mode on the hand–held tester.

(c) Perform ”EVAP SYS CHECK (or EVAP LEAK TEST)”.

CHECK:

Display on the Hand–held tester	Proceed to
Scan tool detects a leak on the fuel tank side.	A
Scan tool detects a leak on the canister side.	B
Scan tool doesn’t detects a leak on the EVAP system.	C

If any changes do not occur with in 1 minute after pressing ”EVAP LEAK TEST”, once remove the fuel tank cap, then set the fuel tank cap again. Then perform the ”EVAP LEAK TEST”.

A → **Refer to DTC P0441 or P0446 (See page DI–328 step 2).**

B → **Refer to DTC P0441 or P0446 (See page DI–328 step 24).**

C

2	**Check that fuel tank cap is TOYOTA genuine parts.**

NG → **Replace to TOYOTA genuine parts.**

OK

3	**Check that fuel tank cap is correctly installed.**

NG → **Correctly install fuel tank cap.**

OK

4	**Check fuel tank cap (See page EC–6).**

NG → **Replace fuel tank cap.**

OK

5	**Check filler neck for damage.**

PREPARATION:
Remove the fuel tank cap.
CHECK:
Visually inspect the filler neck for damage.

NG → **Replace filler pipe.**

OK

6	**Check purge flow.**

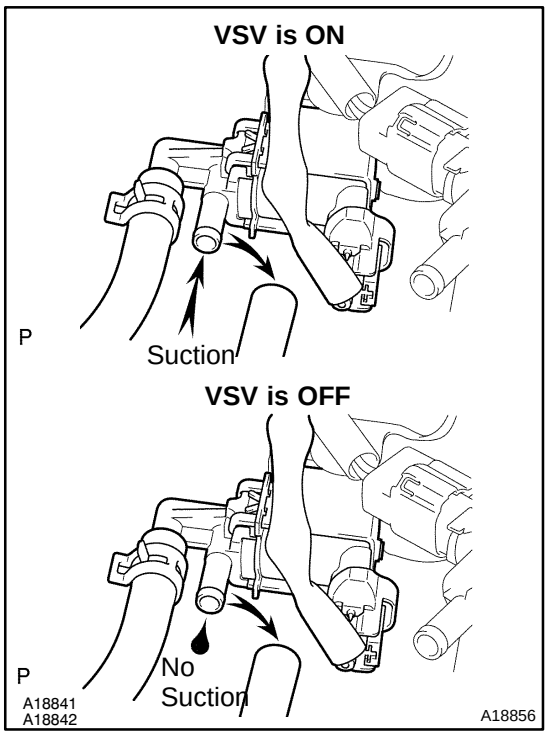

PREPARATION:
(a) Connect the hand–held tester to the DLC3.
(b) Select the item ”DIAGNOSIS/ENHANCED OBD II/ACTIVE TEST” mode on the hand–held tester.
(c) Disconnect the vacuum hose for the VSV for the EVAP from the charcoal canister.
(d) Start the engine.
(e) Select the item ”EVAP VSV (ALON)/ALL” in the ACTIVE TEST and operate EVAP VSV (Press the ← or → button).

CHECK:
When the VSV for the EVAP is operated by the hand–held tester, check whether the disconnected hose applies suction to your finger.

OK:
VSV is ON:
Disconnected hose applies suction to your finger.
VSV is OFF:
Disconnected hose applies no suction to your finger.

OK → **Go to step 10.**

NG

7	**Check vacuum hose between intake manifold and VSV for EVAP, and VSV for EVAP and charcoal canister.**

CHECK:

(a) Check that the vacuum hose is connected correctly.
(b) Check the vacuum hose for looseness and disconnection.
(c) Check the vacuum hose for cracks, hole, damage and blockage.

NG → **Repair or replace.**

OK

8	**Check operation of VSV for EVAP (See page SF–49).**

NG → **Replace VSV for EVAP.**

OK

9	**Check for open and short in harness and connector between EFI main relay (Marking: EFI) and VSV for EVAP, and VSV for EVAP and ECM (See page IN–28).**

NG → **Repair or replace harness or connector.**

OK

Check and replace ECM (See page IN–28).

10	Check VSV for CCV.

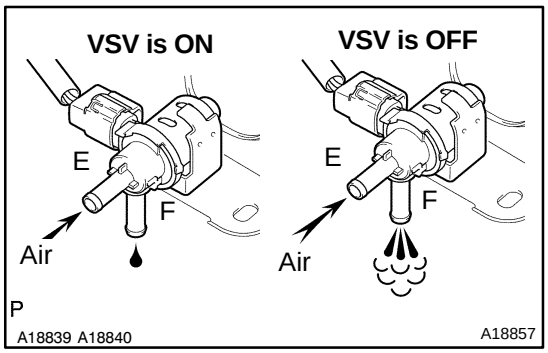

PREPARATION:

(a) Disconnect the vacuum hose for the VSV for the CCV from the charcoal canister.
(b) Turn the ignition switch ON and push the hand–held tester main switch ON.
(c) Select the item ”DIAGNOSIS/ENHANCED OBD II/ACTIVE TEST” mode on the hand–held tester.
(d) Select the item ”INTAKE CTL VSV/ALL” in the ACTIVE TEST and operate INTAKE CTL VSV (Press the ← or → button).

CHECK:

Check the VSV operation when it is operated by the hand–held tester.

OK:

VSV is ON:
Air does not flow from port E to port F.
VSV is OFF:
Air from port E flows out through port F.

OK	Go to step 14.

NG

11	Check vacuum hose between VSV for CCV and charcoal canister.

CHECK:

(a) Check that the vacuum hose is connected correctly.
(b) Check the vacuum hose for looseness and disconnection.
(c) Check the vacuum hose for cracks, hole damage, and blockage.

NG	Repair or replace.

OK

12	Check operation of VSV for CCV (See page SF–50).

NG	Replace VSV for CCV.

OK

13	**Check for open and short in harness and connector between EFI main relay (Marking: EFI) and VSV for CCV, and VSV for CCV and ECM (See page IN–28).**

NG → **Repair or replace harness or connector.**

OK

Check and replace ECM (See page IN–28).

14	**Check VSV for pressure switching valve.**

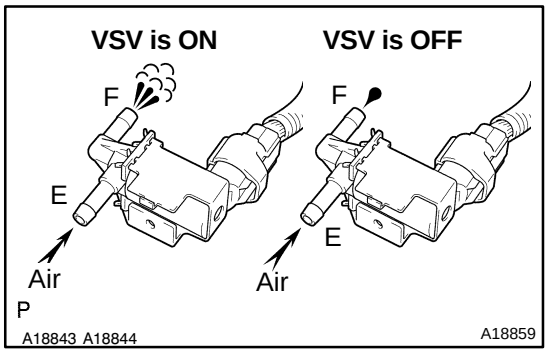

PREPARATION:

(a) Turn the ignition switch ON and push the hand–held tester main switch ON.

(b) Select the item "DIAGNOSIS/ENHANCED OBD II/ACTIVE TEST" mode on the hand–held tester.

(c) Select the item "TANK BYPASS VSV/ALL" in the ACTIVE TEST and operate TANK BYPASS VSV (Press the ← or → button).

CHECK:

Check the VSV operation when it is operated by the hand–held tester.

OK:

VSV is ON:
Air from port E flows out through port F.
VSV is OFF:
Air does not flow from port E to port F.

OK → **Go to step 17.**

NG

15	**Check operation of VSV for pressure switching valve (See page SF–52).**

NG → **Replace VSV for pressure switching valve.**

OK

16	**Check for open and short in harness and connector between EFI main relay (Marking: EFI) and VSV for pressure switching valve, and VSV for pressure switching valve and ECM (See page IN–28).**

NG → **Repair or replace harness or connector.**

OK

Check and replace ECM (See page IN–28).

17	**Check whether hose close to fuel tank have been modified, and check whether there are signs of any accident near fuel tank or charcoal canister.**

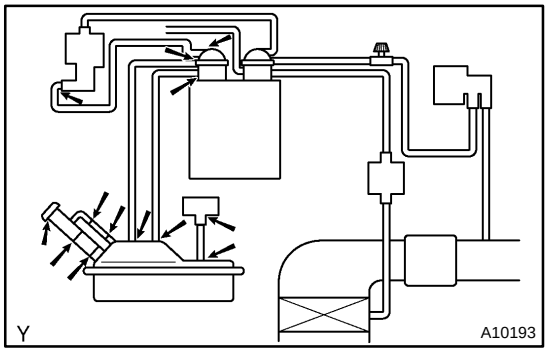

CHECK:

Check for cracks, deformation and loose connection of the following parts:

- Fuel tank
- Charcoal canister
- Fuel tank filler pipe
- Hoses and tubes around fuel tank and charcoal canister

NG → **Repair or replace.**

OK

18	**Check vacuum hoses between vapor pressure sensor and fuel tank, and charcoal canister and VSV for pressure switching valve.**

CHECK:

(a) Check that the vacuum hose is connected correctly.
(b) Check the vacuum hose for looseness and disconnection.
(c) Check the vacuum hose for cracks, hole and damage.

NG → **Repair or replace.**

OK

19	**Check vacuum hoses ((4), (5), (7) and (8) in Fig. 1 in description).**

CHECK:

(a) Check that the vacuum hose is connected correctly.
(b) Check the vacuum hose for looseness and disconnection.
(c) Check the vacuum hose for cracks, hole and damage.

NG → **Repair or replace.**

OK

20	**Check hose and tube between fuel tank and charcoal canister.**

CHECK:

(a) Check for proper connection of the fuel tank and fuel evap pipe (See page EC–6), fuel evap pipe and fuel tube under the floor, fuel tube under the floor and charcoal canister.
(b) Check the hose and tube for cracks, hole and damage.

NG → **Repair or replace.**

OK

21	**Check charcoal canister for cracks, hole and damage (See page EC–6).**

NG → **Repair or replace.**

OK

22	**Check voltage between terminals VC and E2 of ECM connector.**

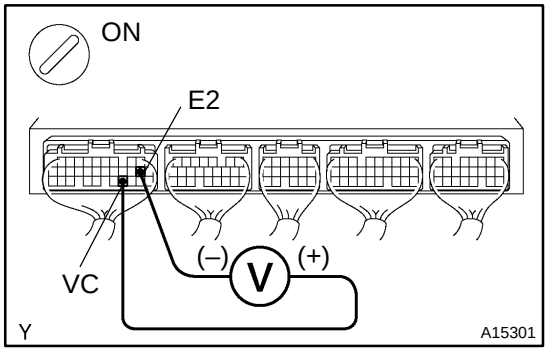

CHECK:

(a) Remove the grove compartment (See page SF–63).
(b) Turn the ignition switch ON.

CHECK:

Measure the voltage between terminals VC and E2 of the ECM connector.

OK:

Voltage: 4.5 – 5.5 V

NG	Check and replace ECM (See page IN–28).

OK

23	Check voltage between terminals PTNK and E2 of ECM connectors.

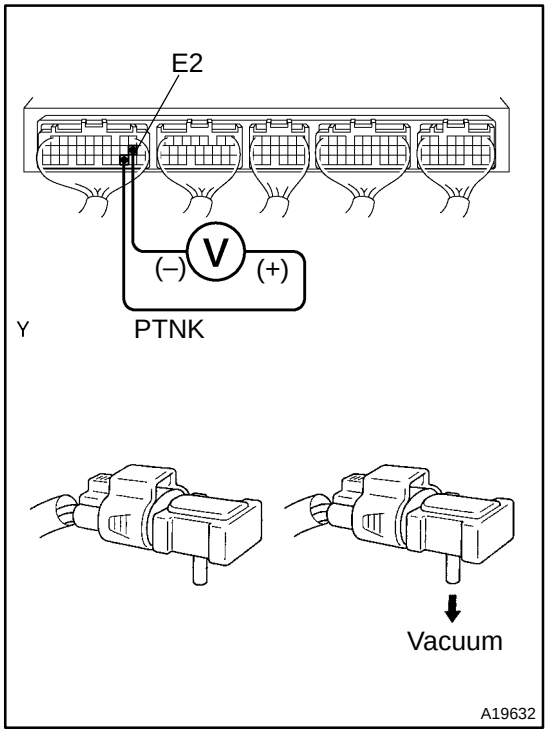

PREPARATION:

(a) Remove the grove compartment (See page SF–63).

(b) Turn the ignition switch ON.

CHECK:

Measure the voltage between terminals PTNK and E2 of the ECM connectors.

(1) Disconnect the vacuum hose from the vapor pressure sensor.

(2) Using the MITYVAC (Hand–held Vacuum Pump), apply a vacuum of 4.0 kPa (30 mmHg, 1.18 in.Hg) to the vapor pressure sensor.

NOTICE:

The vacuum applied to the vapor pressure sensor must be less than 66.7 kPa (500 mmHg, 19.7 in.Hg).

OK:

(1) Voltage: 2.9 – 3.7 V

(2) Voltage: 0.5 V or less

OK	Go to step 25.

NG

24	Check for open and short in harness and connector between vapor pressure sensor and ECM (See page IN–28).

NG	Repair or replace harness or connector.

OK

Replace vapor pressure sensor.

25	**Check fuel tank and fuel tank over fill check valve for cracks and damage.**

NG → **Replace fuel tank or fuel tank over fill check valve.**

OK

It is likely that vehicle user did not properly close fuel tank cap. Please explain to customer how to properly install fuel tank cap.

OBD II scan tool (excluding hand–held tester):

HINT:

Refer to DTC P0441 or P0446 on page DI–328.

DI3CQ–11

DTC	P0500	Vehicle Speed Sensor ”A”

DTC	P0503	Vehicle Speed Sensor ”A”Intermittent/Erratic/High

CIRCUIT DESCRIPTION

The vehicle speed sensor outputs a 4–pulse signal for every revolution of the rotor shaft, which is rotated by the transmission output shaft via the driven gear. After this signal is converted into a more precise rectangular waveform by the waveform shaping circuit inside the combination meter, it is then transmitted to the ECM. The ECM determines the vehicle speed based on the frequency of these pulse signals.

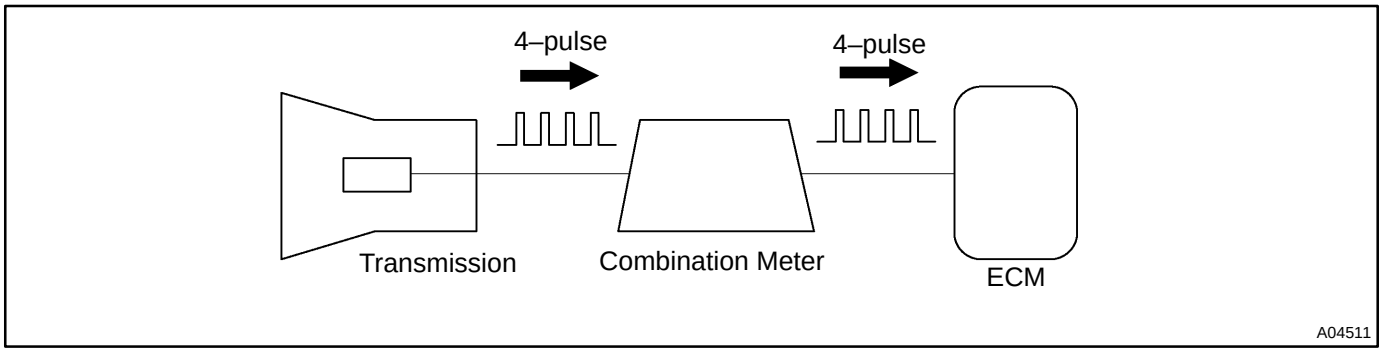

DTC No.	DTC Detection Condition	Trouble Area
P0500 P0503	No speed sensor signal to ECM under following conditions : (2 trip detection logic) For A/T (a) Park/neutral position switch is OFF (b) Vehicle is being driven For M/T (c) Engine speed is between 1,800 rpm and 4,800 rpm	• Combination meter • Open or short in vehicle speed sensor circuit • Vehicle speed sensor • ECM

WIRING DIAGRAM

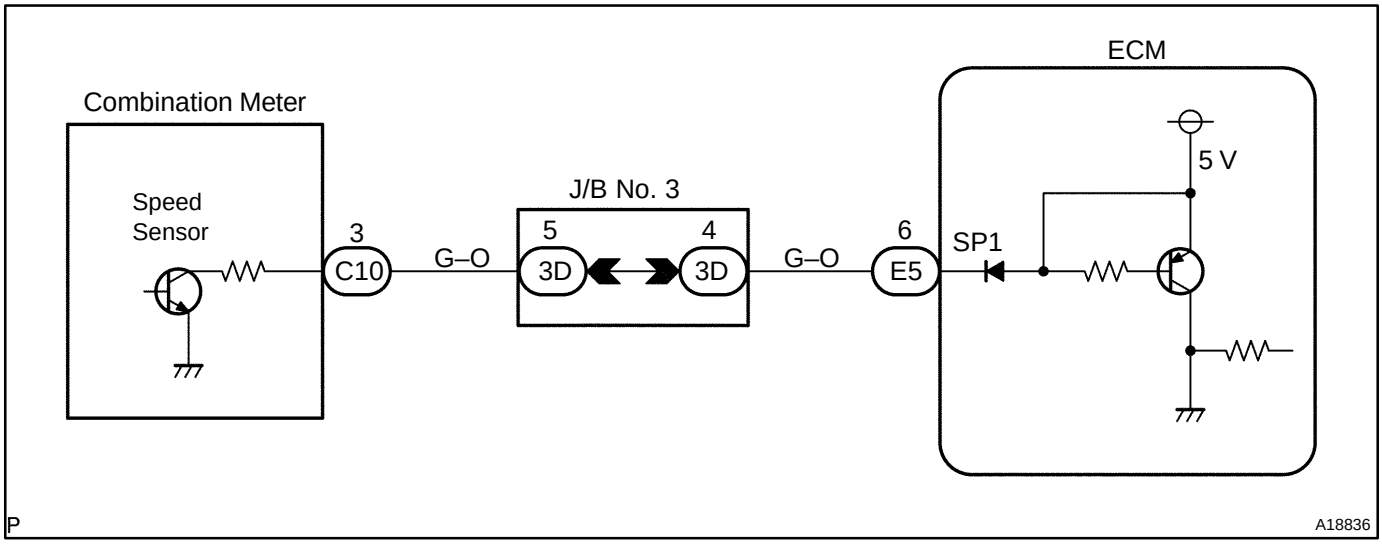

INSPECTION PROCEDURE

HINT:

Read freeze frame data using the hand–held tester or the OBD II scan tool, as freeze frame records the engine conditions when a malfunction is detected. When troubleshooting, it is useful for determining whether the vehicle was running or stopped, the engine was warmed up or not, the air–fuel ratio was lean or rich, etc. at the time of the malfunction.

1	**Check operation of speedometer.**

CHECK:

Drive the vehicle and check if the operation of the speedometer in the combination meter is normal.

HINT:

The vehicle speed is operating normally if the speedometer display is normal.

NG → **Check speedometer circuit (See page BE–37).**

OK

2	**Check voltage between terminal SP1 of ECM connector and body ground.**

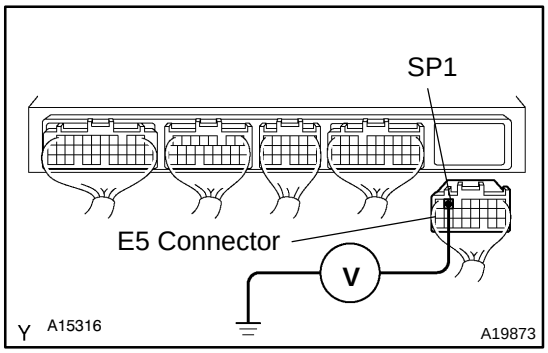

PREPARATION:

(a) Remove the glove compartment (See page SF–63).
(b) Disconnect the E5 connector from the ECM.
(c) Shift the shift lever to the neutral.
(d) Jack up a rear wheel on one side.
(e) Turn the ignition switch ON.

CHECK:

Measure the voltage between terminal SP1 of the ECM connector and body ground when the wheel is turned slowly.

OK:

Voltage is generated intermittently.

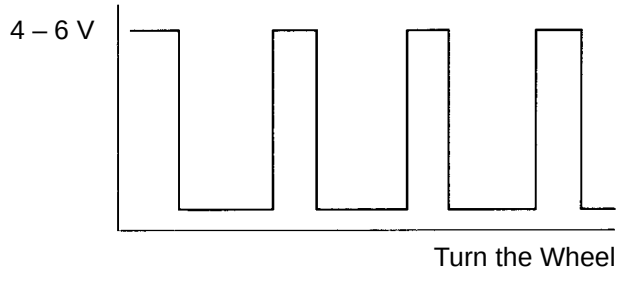

NG → **Check and repair harness and connector between combination meter and ECM.**

OK

Check and replace ECM (See page IN–28).

DI1LY–13

DTC	P0505	Idle Control System Malfunction (w/ ETCS)

CIRCUIT DESCRIPTION

The idle speed is controlled by the Electric Throttle Control System (w/ ETCS).
ETCS is composed of the throttle motor to operate the throttle valve, the magnetic clutch to connect the throttle motor with the throttle valve, the throttle position sensor to detect the opening angle of the throttle valve, the accelerator pedal position sensor to detect the accelerator pedal position, the ECM to control the ETCS and the one valve type throttle body.
The ECM controls the throttle motor to make the throttle valve opening angle properly for the target idle speed.

DTC No.	DTC Detecting Condition	Trouble Area
P0505	Idle speed continues to vary greatly from target speed (2 trip detection logic)	• Air induction system • Electric throttle control system • PCV valve and hose

INSPECTION PROCEDURE

HINT:
Read freeze frame data using the hand–held tester or the OBD II scan tool, as freeze frame records the engine conditions when a malfunction is detected. When troubleshooting, it is useful for determining whether the vehicle was running or stopped, the engine was warmed up or not, the air–fuel ratio was lean or rich, etc. at the time of the malfunction.

1	**Are there any other codes (besides P0505) being output?**

YES → **Go to relevant DTC chart (See page DI–231).**

NO

2	**Check connection of PCV valve and hose**

NG → **Repair or replace PCV valve and hose**

OK

3	Check air induction system (See page SF–1).

NG → Repair or replace.

OK

4	Check electric throttle control system (See page SF–28).

NG → Replace throttle body assy (See page SF–31).

OK

Check and replace ECM (See page IN–28).

DI0SG–16

DTC	P0560	System Voltage

CIRCUIT DESCRIPTION

Battery positive voltage is supplied to terminal BATT of the ECM even when the ignition switch is OFF for use by the DTC memory and air–fuel ratio adaptive control value memory, etc.

DTC No.	DTC Detection Condition	Trouble Area
P0560	Open in back up power source circuit	• Open in back up power source circuit • ECM

HINT:

If DTC P0560 is displayed, the ECM does not store another DTC.

WIRING DIAGRAM

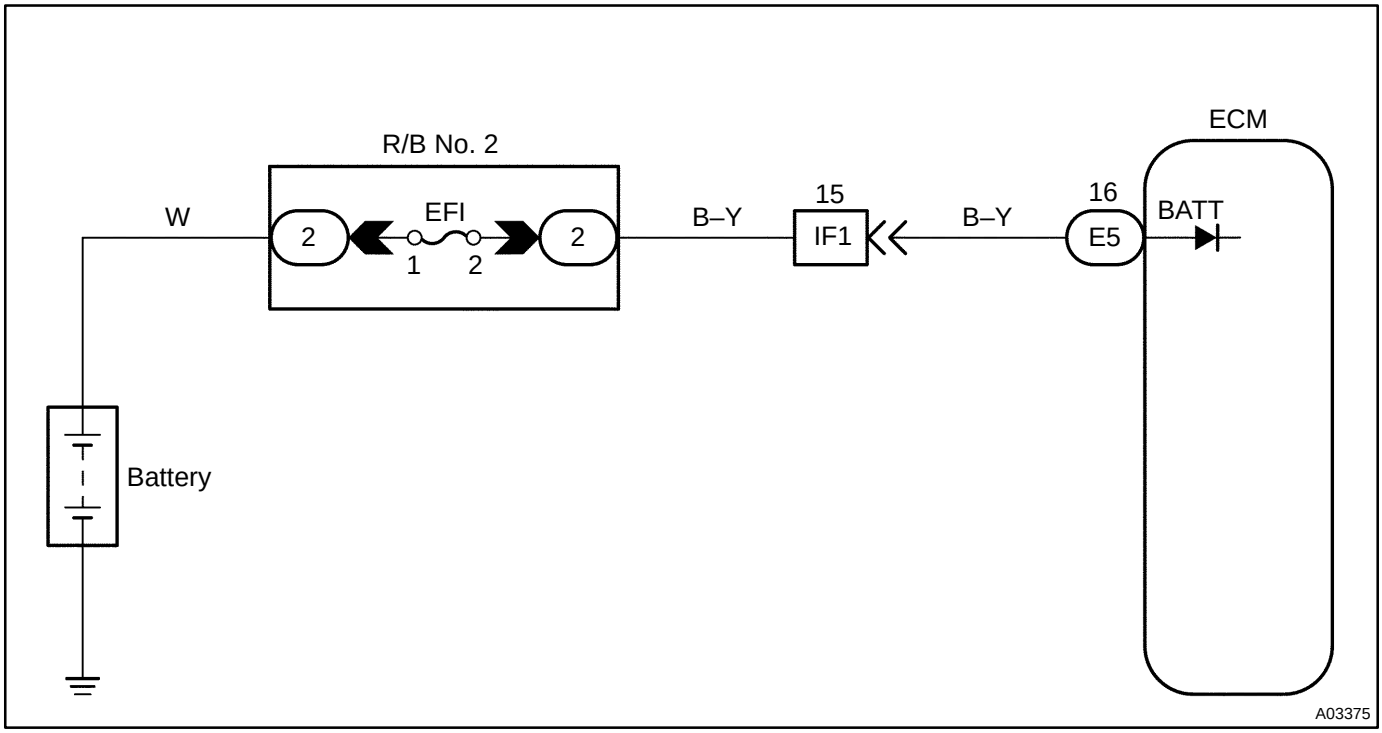

INSPECTION PROCEDURE

HINT:

Read freeze frame data using the hand–held tester or the OBD II scan tool, as freeze frame data records the engine conditions when a malfunction is detected. When troubleshooting, it is useful for determining whether the vehicle was running or stopped, the engine was warmed up or not, the air–fuel ratio was lean or rich, etc. at the time of the malfunction.

1	Check voltage between terminal BATT of ECM connector and body ground.

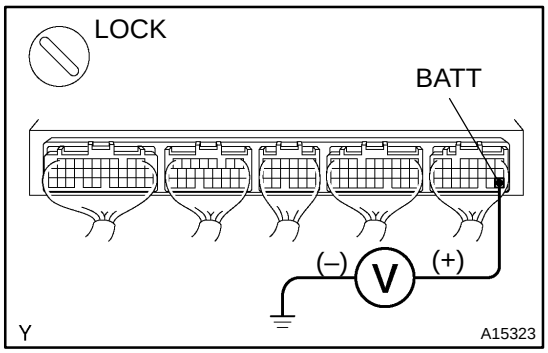

PREPARATION:
Remove the glove compartment (See page SF–63).
CHECK:
Measure the voltage between terminal BATT of the ECM connector and the body ground.
OK:
Voltage: 9 – 14 V

OK	Check and replace ECM (See page IN–28).

NG

2	Check EFI fuse.

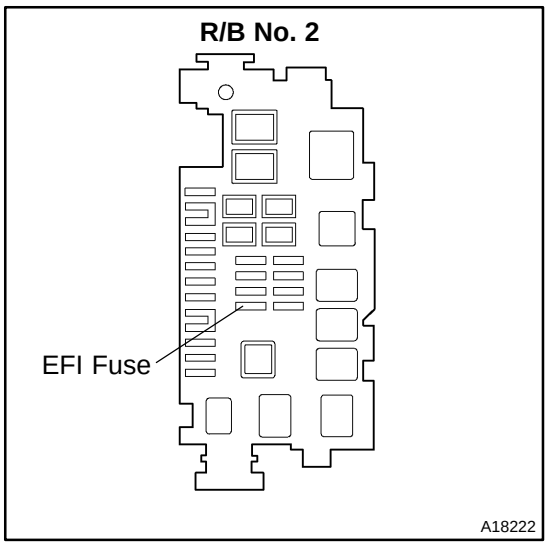

PREPARATION:
Remove the EFI fuse from the R/B No. 2.
CHECK:
Check the continuity of the EFI fuse.
OK:
Continuity

NG	Check for short in all harness and components connected to EFI fuse.

OK

Check and repair harness or connector between battery and EFI fuse, and EFI fuse and ECM.

DIB1Z–01

DTC	P0617	Starter Relay Circuit High

CIRCUIT DESCRIPTION

While the engine is being cranked, the battery positive voltage is applied to terminal STA of the ECM.

DTC No.	DTC Detection Condition	Trouble Area
P0617	When all conditions (a), (b) and (c) are satisfied with battery (+B) voltage 10.5 V or more (a) Vehicle speed ≧ 20 km/h (6 mph) (b) Engine revolution ≧ 1,000 rpm (c) STA signal ON	• Short in park/neutral position (PNP) switch (A/T) or clutch start switch (M/T) circuit • Park/neutral position (PNP) switch (A/T) • Clutch start switch (M/T) • Ignition switch • ECM

WIRING DIAGRAM

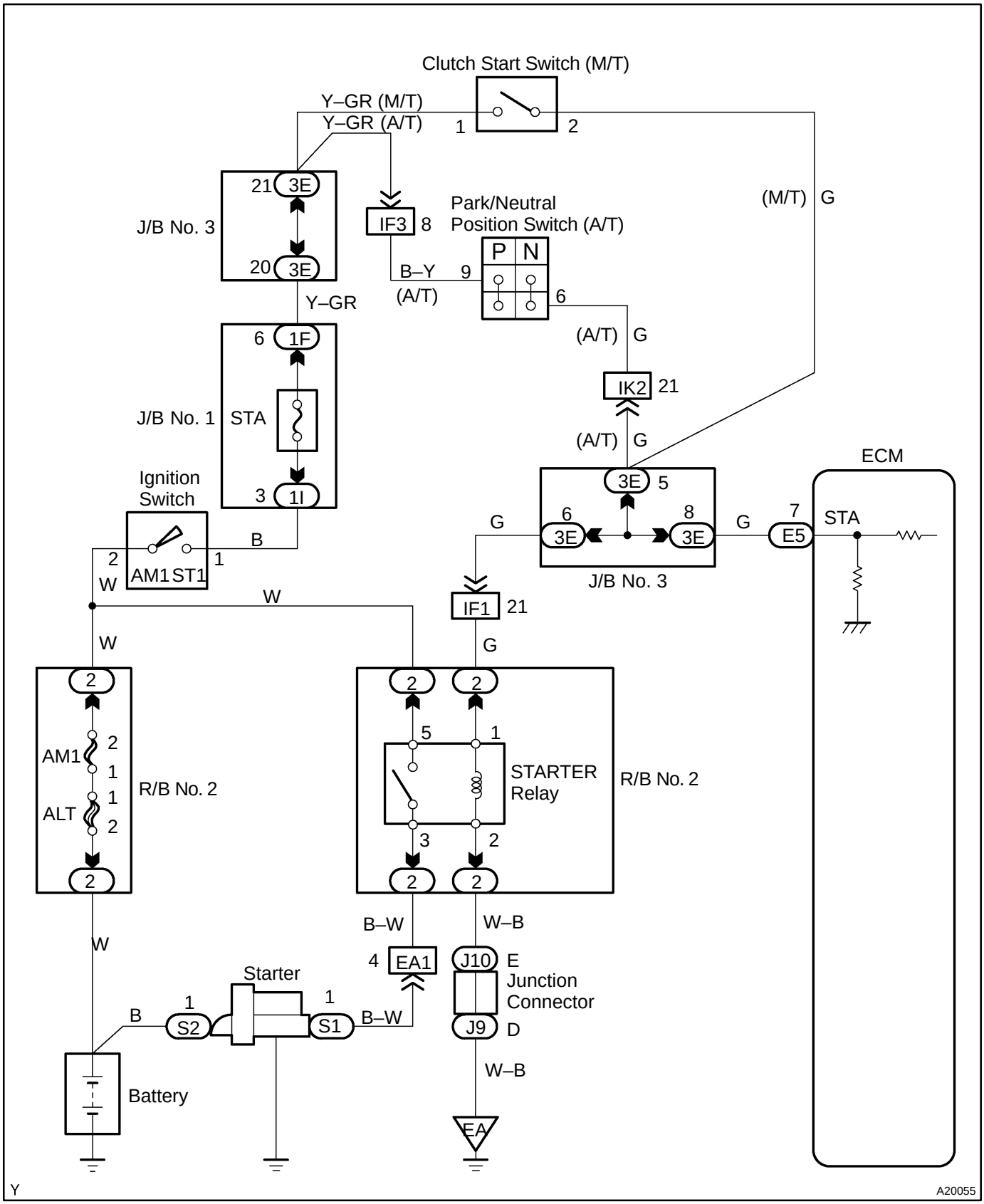

INSPECTION PROCEDURE

HINT:

Read freeze frame data using the hand–held tester or the OBD II scan tool, as freeze frame data records the engine conditions when a malfunction is detected. When troubleshooting, it is useful for determining whether the vehicle was running or stopped, the engine was warmed up or not, the air–fuel ratio was lean or rich, etc. at the time of the malfunction.

Hand–held tester:

1	**Connect hand–held tester, and check STA signal.**

PREPARATION:

(a) Connect the hand–held tester to the DLC3.
(b) Turn the ignition switch ON and push the hand–held tester main switch ON.
(c) Select the item ”DIAGNOSIS/ENHANCED OBD II/DATA LIST/ALL/STARTER SIG”.

CHECK:

Read the STA signal on the hand–held tester while the starter operates.

OK:

Ignition Switch Position	ON	START
STA Signal	OFF	ON

OK → **Check and replace ECM (See page IN–28)**

NG

2	**Check ignition switch (See page BE–14).**

NG → **Replace ignition switch (Go to next step after the replacement).**

OK

3	**Connect hand–held tester, and check STA signal.**

PREPARATION:

(a) Connect the hand–held tester to the DLC3.
(b) Turn the ignition switch ON and push the hand–held tester main switch ON.
(c) Select the item ”DIAGNOSIS/ENHANCED OBD II/DATA LIST/ALL/STARTER SIG”.

CHECK:

Read the STA signal on the hand–held tester while the starter operates.

OK:

Ignition Switch Position	ON	START
STA Signal	OFF	ON

OK	**System OK.**

NG

4	**Check park/neutral position (PNP) switch (A/T) (See page DI–482) or clutch start switch (M/T) (See page CL–2).**

NG	**Replace park/neutral position switch or clutch start switch (Go to next step after the replacement).**

OK

5	**Connect hand–held tester, and check STA signal.**

PREPARATION:

(a) Connect the hand–held tester to the DLC3.
(b) Turn the ignition switch ON and push the hand–held tester main switch ON.
(c) Select the item ”DIAGNOSIS/ENHANCED OBD II/DATA LIST/ALL/STARTER SIG”.

CHECK:

Read the STA signal on the hand–held tester while the starter operates.

OK:

Ignition Switch Position	ON	START
STA Signal	OFF	ON

OK	**System OK.**

NG

Check for short in harness and connector between ECM and park/neutral position (PNP) switch (A/T) (See page DI–482) or clutch start switch (M/T) (See page IN–28)

OBD II scan tool (excluding hand–held tester):

1	**Check voltage between terminal STA of ECM connector and body ground.**

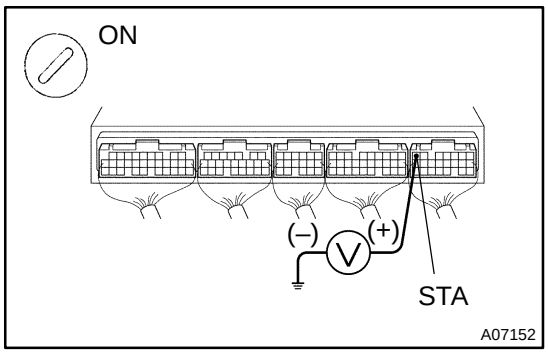

PREPARATION:
Remove the glove compartment (See page SF–63).
CHECK:
Measure the voltage between terminal STA of the ECM connector and the body ground, during the engine cranking (ignition switch START position) and does not engine cranking (ignition switch position ON).
OK:

Voltage:
6 V or more (ignition switch START position)
0 V (ignition switch ON position)

OK	**Check and replace ECM (See page IN–28)**

NG

2	**Check ignition switch (See page BE–14).**

NG	**Replace ignition switch (Go to next step after the replacement).**

OK

3	**Check voltage between terminal STA of ECM connector and body ground.**

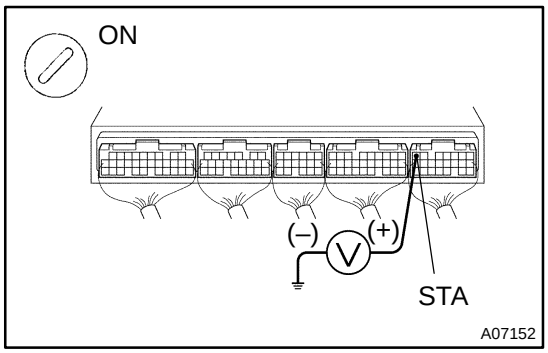

PREPARATION:
Remove the glove compartment (See page SF–63).
CHECK:
Measure the voltage between terminal STA of the ECM connector and the body ground, during the engine cranking (ignition switch START position) and does not engine cranking (ignition switch position ON).
OK:

Voltage:
6 V or more (ignition switch START position)
0 V (ignition switch ON position)

OK	System OK.

NG

4	Check park/neutral position (PNP) switch (A/T) (See page DI–482) or clutch start switch (M/T) (See page CL–2).

NG	Replace park/neutral position switch or clutch start switch (Go to next step after the replacement).

OK

5	Check voltage between terminal STA of ECM connector and body ground.

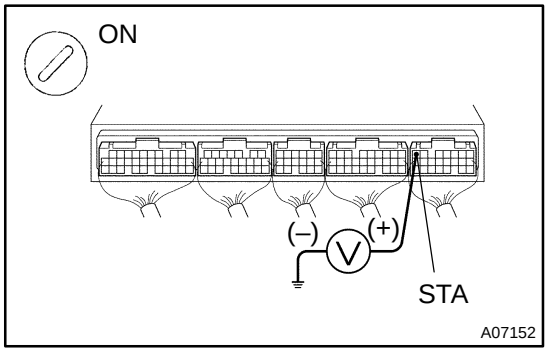

PREPARATION:
Remove the glove compartment (See page SF–63).
CHECK:
Measure the voltage between terminal STA of the ECM connector and the body ground, during the engine cranking (ignition switch START position) and does not engine cranking (ignition switch position ON).
OK:

Voltage:
6 V or more (ignition switch START position)
0 V (ignition switch ON position)

OK	System OK.

NG

Check for short in harness and connector between ECM and park/neutral position (PNP) switch (A/T) (See page DI–482) or clutch start switch (M/T) (See page IN–28)

DIB21–01

DTC	P0705	Transmission Range Sensor Malfunction (PRNDL Input)

DTC	P0850	Park/Neutral Switch Input Circuit

CIRCUIT DESCRIPTION

The park/neutral position switch go on when the shift lever is in the N or P shift position. When it goes on terminal NSW of the ECM is grounded to body ground via the starter relay, thus the terminal NSW voltage becomes 0V. When the shift lever is in the D, 2, L or R position, the park/neutral position switch goes off, so the voltage of ECM. Terminal NSW becomes battery voltage, the voltage of the ECM internal power source. If the shift lever is moved from the N position to the D position, this signal is used for air–fuel ratio correction and for idle speed control (estimated control), etc.

DTC No.	DTC Detection Condition	Trouble Area
P0705 P0850	2 or more switches are ON simultaneously for P, R, N, D, 2 and L position (2 trip detection logic)	• Open in park/neutral position switch circuit • Park/neutral position switch • ECM
	When driving under conditions (a) and (b) for 30 sec. or more park/neutral position switch is ON (N position): (2 trip detection logic) (a) Vehicle speed: 70 km/h (44 mph) or more (b) Engine speed: 1,500 – 2,500 rpm	

HINT:
After confirming DTC P0705 and P0850 use the hand–held tester to confirm the PNP switch signal from the ”DIAGNOSIS/ENHANCED OBD II/DATA LIST/ALL/PNP SW [NSW]”.

WIRING DIAGRAM

Refer to DTC P0705, P0850 on page DI–482.

INSPECTION PROCEDURE

Refer to DTC P0705, P0850 on page DI–482.

DIA9S–02

DTC	P0724	Brake Switch ”B” Circuit High

CIRCUIT DESCRIPTION

This signal is used to detect when the brakes have been applied. The STP signal voltage is the same as the voltage supplied to the stop lights. The STP signal is used mainly to control the fuel cut–off engine speed. (The fuel cut–off engine speed is reduced slightly when the vehicle is braking.)

DTC No.	DTC Detection Condition	Trouble Area
P0724	Stop light switch does not turn off even once the vehicle is driven (2 trip detection logic)	• Short in stop light switch signal circuit • Stop light switch • ECM

WIRING DIAGRAM

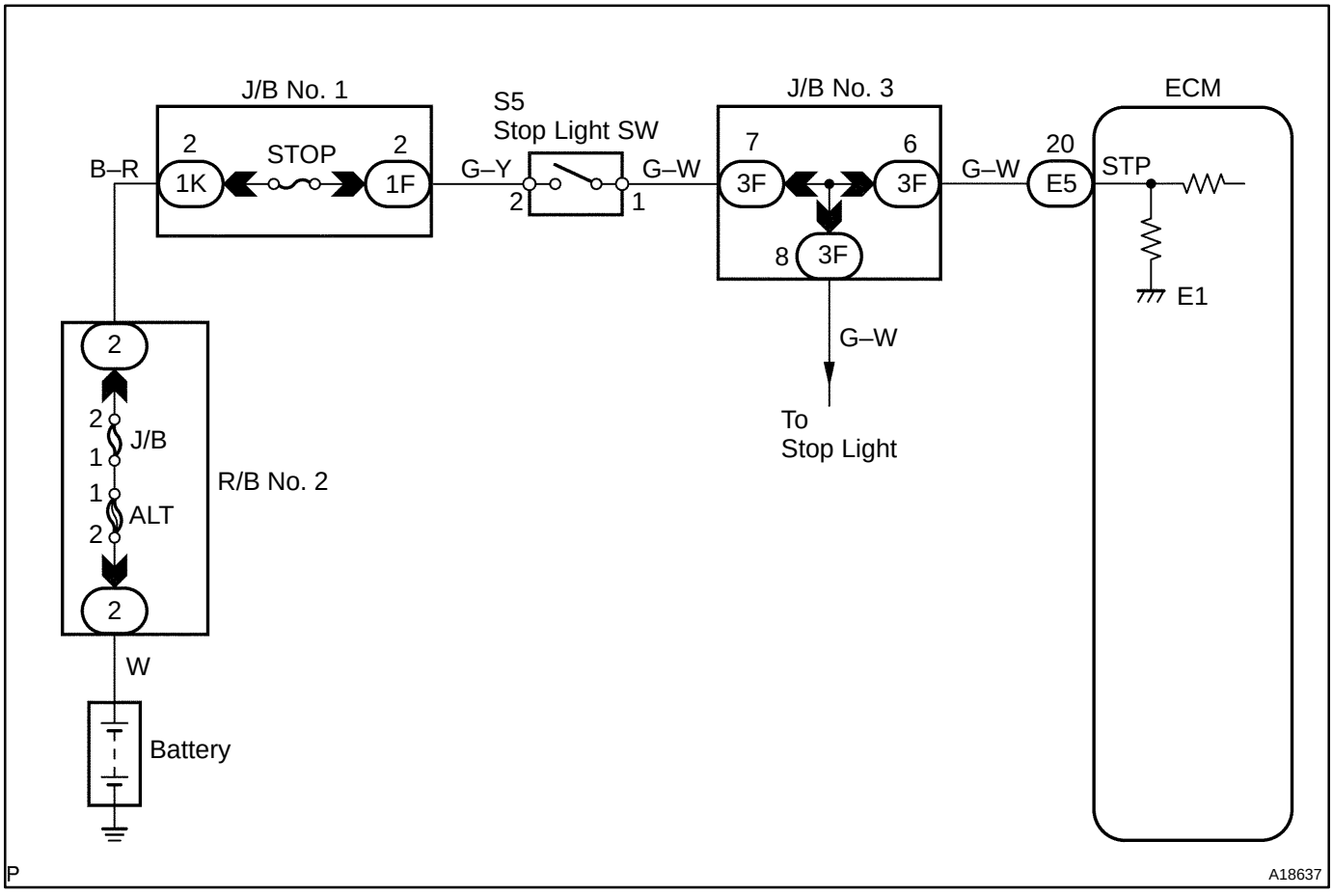

INSPECTION PROCEDURE

HINT:

Read freeze frame data using the hand–held tester or the OBD II scan tool, as freeze frame data records the engine conditions when a malfunction is detected. When troubleshooting, it is useful for determining whether the vehicle was running or stopped, the engine was warmed up or not, the air–fuel ratio was lean or rich, etc. at the time of the malfunction.

1	**Check operation of stop light.**

CHECK:

Check if the stop lights go on and off normally when the brake pedal is operated and released.

NG → **Check and repair stop light circuit and stop light switch (See page BE–29).**

OK

2	Check STP signal.

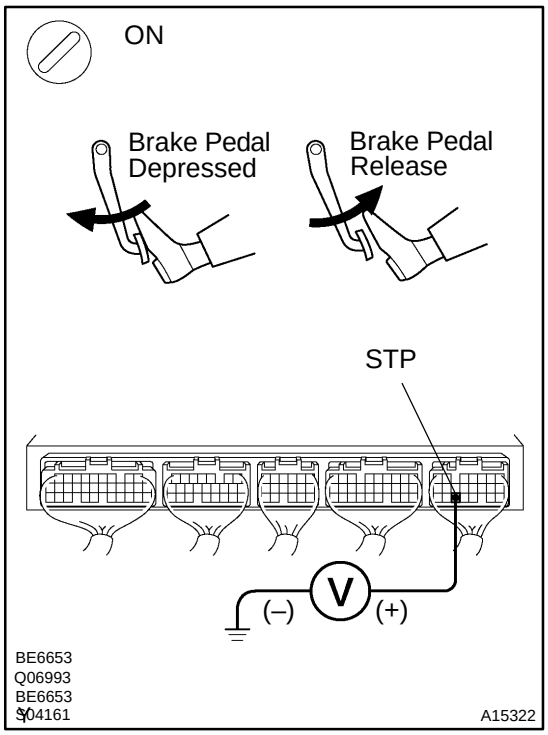

When using hand–held tester:

PREPARATION:

(a) Connect the hand–held tester to the DLC3.

(b) Turn the ignition switch ON and push the hand–held tester main switch ON.

CHECK:

Read the STP signal on the hand–held tester.

OK:

Brake Pedal	STP Signal
Depressed	ON
Release	OFF

When not using Hand–held tester:

PREPARATION:

(a) Remove the glove compartment (See page SF–63).

(b) Turn the ignition switch ON.

CHECK:

Check the voltage between terminal STP of the ECM connector and body ground.

OK:

Brake Pedal	Voltage
Depressed	7.5 – 14 V
Release	Below 1.5 V

OK → **Check for intermittent problems (See page DI–218).**

NG

3	Check harness and connector between stop light switch and ECM (See page IN–28).

NG → **Repair or replace harness or connector.**

OK

Check and replace ECM (See page IN–28).

DIA8U–02

DTC	P0100	Mass or Volume Air Flow Circuit

DTC	P0102	Mass or Volume Air Flow Circuit Low Input

DTC	P0103	Mass or Volume Air Flow Circuit High Input

CIRCUIT DESCRIPTION

The mass air flow meter uses a platinum hot wire. The hot wire air flow meter consists of a platinum hot wire, temperature sensor and a control circuit installed in a plastic housing. The hot wire air flow meter works in principle that the hot wire and temperature sensor located in the intake air bypass of the housing detect any changes in the intake air temperature.

The hot wire is maintained at the set tempreature by controlling the current flow through the hot wire. This current flow is then measured as the output voltage of the air flow meter.

The circuit is constructed so that the platinum hot wire and temperature sensor can provide a bridge circuit with the power transistor, and controlled so that the potential of A and B can remain equal in order to maintain the set temperature.

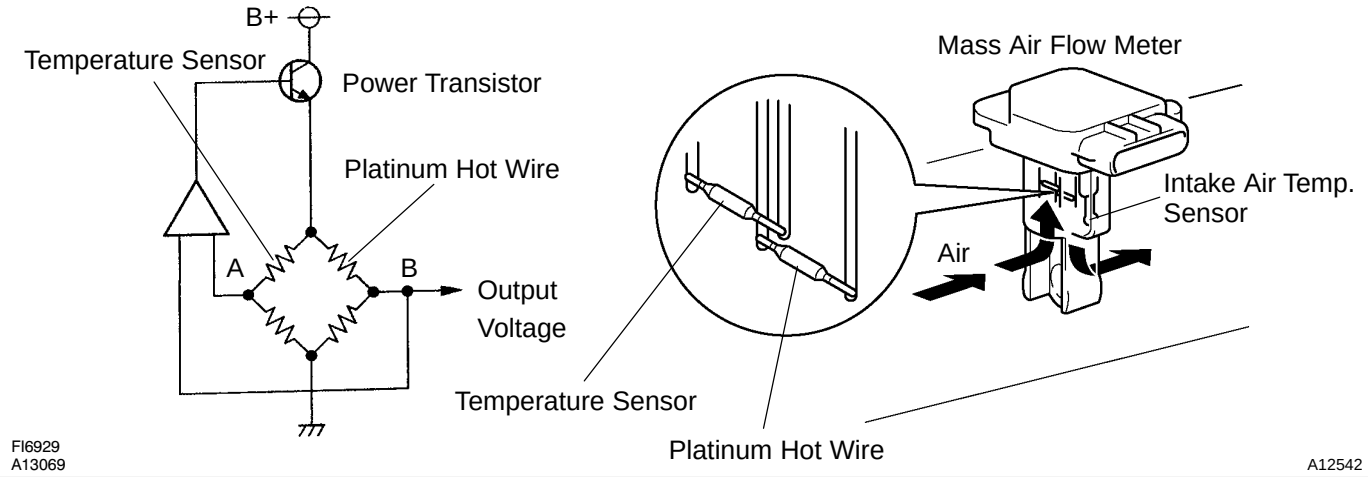

DTC No.	DTC Detecting Condition	Trouble Area
P0100	Open or short in mass air flow meter circuit with more than 3 sec. engine speed 4,000 rpm or less	• Open or short mass air flow meter circuit • Mass air flow meter • ECM
P0102	Open in mass air flow meter circuit with more than 3 sec. engine speed 4,000 rpm or less	
P0103	Short in mass air flow meter circuit with more than 3 sec. engine speed 4,000,rpm or less (+B circuit)	

HINT:

After confirming DTC P0100,P0102 or P0103 use the hand–held tester orOBD II scan tool to confirm the mass air flow ratio from the ”DIAGNOSIS/ENHANCED OBD II/DATA LIST/ALL”.

Air Flow Value (g/s)	Malfunction
Approx. 0.0	• Mass air flow meter power source circuit open • VG circuit open or short
271.0 or more	• E2G circuit open

WIRING DIAGRAM

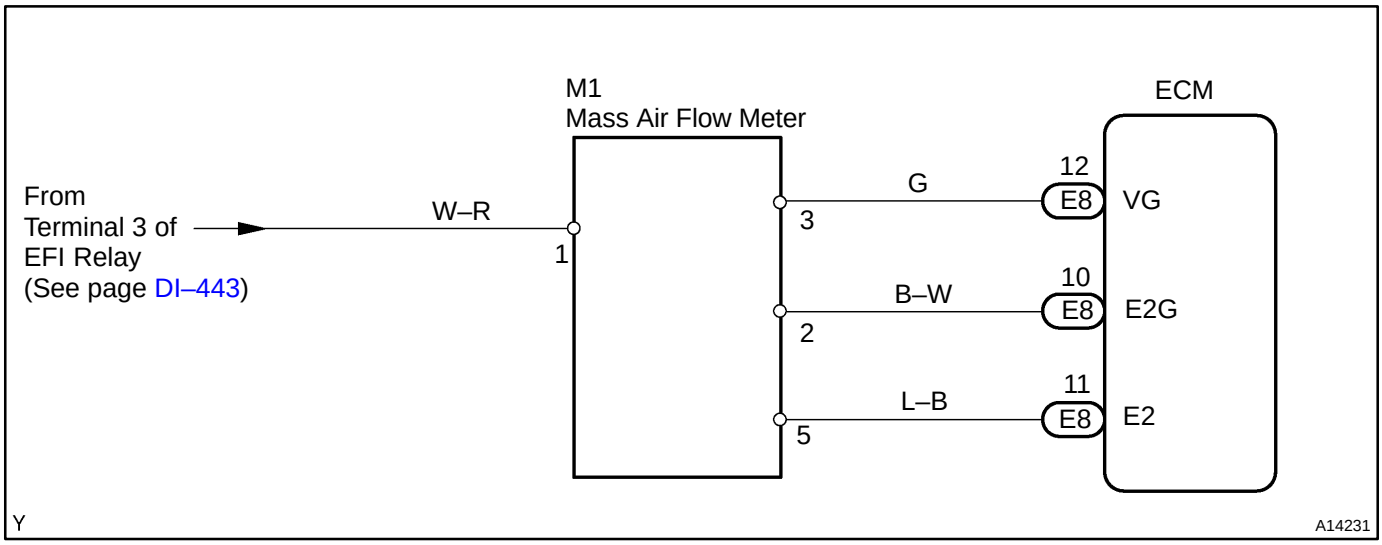

INSPECTION PROCEDURE

HINT:

- If different DTCs that are related to different systems are output simultaneously while terminal E2 is used as a ground terminal, terminal E2 may be open.
- Read freeze frame data using the hand–held tester or the OBD II scan tool, as freeze frame data records the engine conditions when a malfunction is detected. When troubleshooting, it is useful for determining whether the vehicle was running or stopped, the engine was warmed up or not, the air–fuel ratio was lean or rich, etc. at the time of the malfunction.

1	**Connect OBD II scan tool or hand–held tester, and read value of mass air flow rate.**

PREPARATION:

(a) Connect the OBD II scan tool or the hand–held tester to the DLC3.
(b) Turn the ignition switch ON and push the OBD II scan tool or the hand–held tester main switch ON.
(c) Start the engine.
(d) Select the item ”DIAGNOSIS/ENHANCED OBD II/DATA LIST/ALL/MAF”.

CHECK:

Read the mass air flow rate on the OBD II scan tool or the hand–held tester.

RESULT:

Mass Air Flow Rate (g/s)	Proceed to
0.0	Type I
1 ≦ Mass Air Flow Rate ≦ 270.0 or more (*1)	Type II
271.0 or more	Type III

*1: Read the mass air flow rate on the OBD II scan tool or the hand–held tester.

Type II	**Check intermittent problems (See page DI–218).**
Type III	**Go to step 5.**

Type I

2	**Check voltage of mass air flow meter power source.**

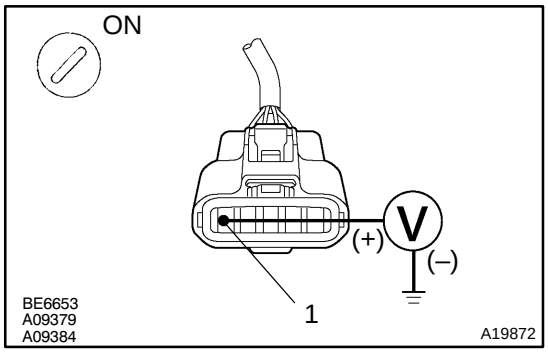

PREPARATION:

(a) Disconnect the mass air flow meter connector.

(b) Turn the ignition switch ON.

CHECK:

Measure the voltage between terminal 1 of the mass air flow meter connector and the body ground.

OK:

Voltage: 9 – 14 V

NG	**Check for open in harness and connector between EFI main relay (Marking: EFI) and mass air flow meter (See page IN–28).**

OK

3	**Check voltage between terminal VG of ECM connector and body ground.**

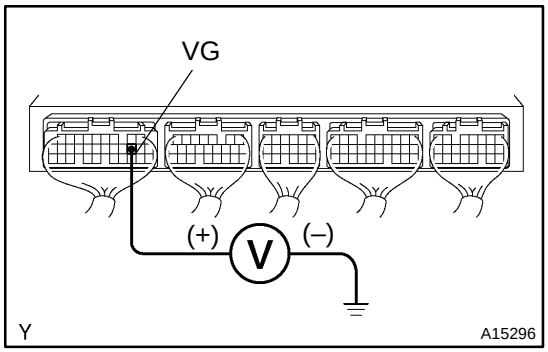

PREPARATION:

(a) Remove the glove compartment (See page SF–63).

(b) Start the engine.

CHECK:

Measure the voltage between terminal VG of the ECM connector and the body ground while the engine is idling.

OK:

Voltage:

0.5 – 3.0 V (P or N position and A/C switch OFF)

OK	**Check and replace ECM (See page IN–28).**

NG

4	**Check for open and short in harness and connector between mass air flow meter and ECM (See page IN–28).**

NG → **Repair or replace harness or connector.**

OK

Replace mass air flow meter.

5	**Check continuity between terminal E2G of ECM connector and body ground.**

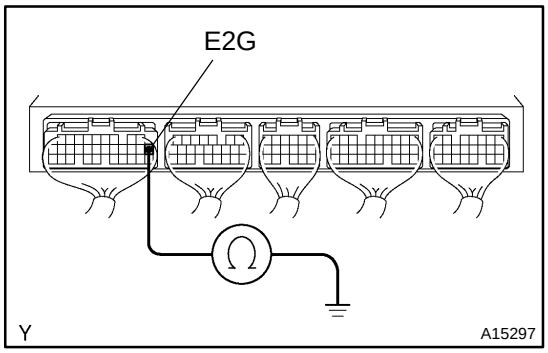

PREPARATION:
Remove the glove compartment (See page SF–63).
CHECK:
Check the continuity between terminal E2G of the ECM connector and the body ground.
OK:
Continuity (1 Ω or less)

NG → **Check and replace ECM (See page IN–28).**

OK

6	**Check for open in harness and connector between mass air flow meter and ECM (See page IN–28).**

NG → **Repair or replace harness or connector.**

OK

Replace mass air flow meter.

DIA8W–02

DTC	P0110	Intake Air Temperature Circuit

DTC	P0112	Intake Air Temperature Circuit Low Input

DTC	P0113	Intake Air Temperature Circuit High Input

CIRCUIT DESCRIPTION

Fig. 1

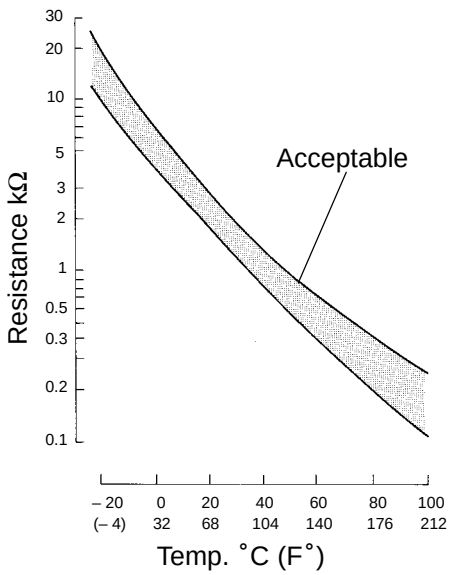

The intake air temperature sensor is built in the mass air flow meter and senses the intake air temperature.
A thermistor built in the sensor changes the resistance value according to the intake air temperature.
The lower the intake air temperature is, the greater the thermistor resistance value becomes, and the higher the intake air temperature is, the lower the thermistor resistance value becomes (See Fig. 1).
The intake air temperature sensor is connected to the ECM (See below). The 5 V power source voltage in the ECM is applied to the intake air temperature sensor from terminal THA via resistor R. That is, resistor R and the intake air temperature sensor are connected in series. When the resistance value of the intake air temperature sensor changes in accordance with changes in the intake air temperature, the potential at terminal THA also changes. Based on this signal, the ECM increases the fuel injection volume to improve driveability during cold engine operation. If the ECM detects the DTC P0110, it operates the fail safe function in which the intake air temperature is assumed to be 20˚C (68˚F).

DTC No.	Proceed to	DTC Detection Condition	Trouble Area
P0110	Step 1	Open or short in intake air temp. sensor circuit for 0.5 sec.	• Intake air temp. sensor circuit • Intake air temp. sensor (built in mass air flow meter) • ECM
P0112	Step 4	Short in intake air temp. sensor circuit for 0.5 sec.	
P0113	Step 2	Open in intake air temp. sensor circuit for 0.5 sec.	

HINT:
After confirming DTC P0110, P0112 and P0113, use the OBD II scan tool or the hand–held tester to confirm the intake air temperature from the ”DIAGNOSIS/ENHANCED OBD II/DATA LIST/ALL”.

Temperature Displayed	Malfunction
–40˚C (–40˚F)	Open circuit
140˚C (284˚F) or more	Short circuit

WIRING DIAGRAM

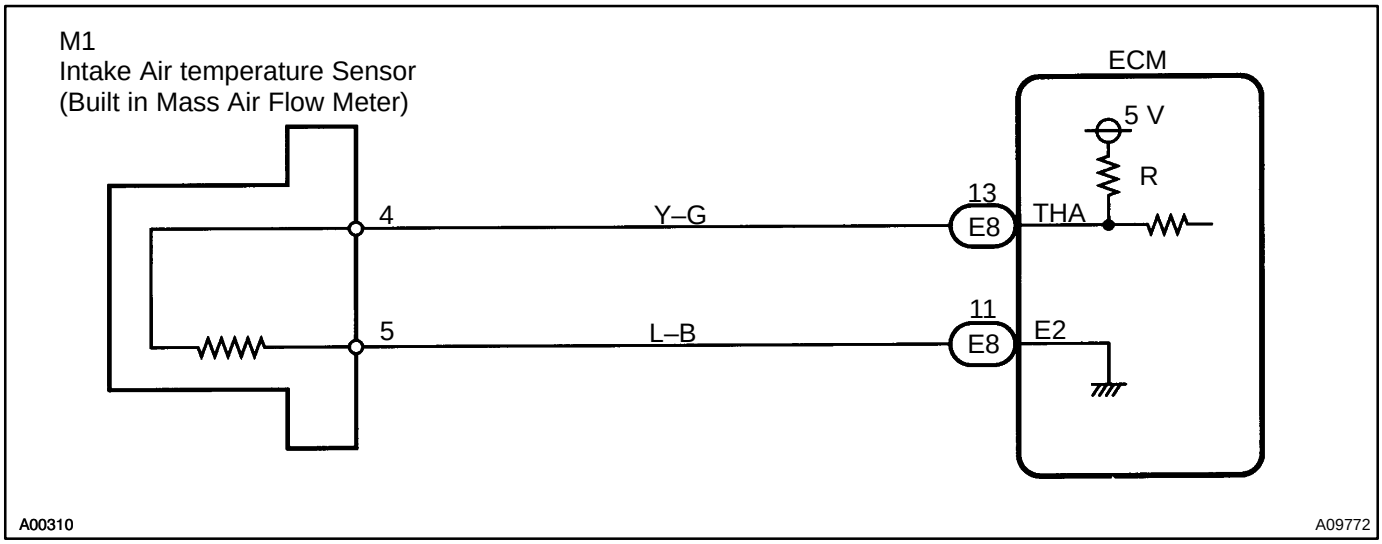

INSPECTION PROCEDURE

HINT:

- If different DTCs that are related to different systems are output simultaneously while terminal E2 is used as a ground terminal, terminal E2 may be open.
- Read freeze frame data using the hand–held tester or the OBD II scan tool, as freeze frame data records the engine conditions when a malfunction is detected. When troubleshooting, it is useful for determining whether the vehicle was running or stopped, the engine was warmed up or not, the air–fuel ratio was lean or rich, etc. at the time of the malfunction.

1	**Connector OBD II scan tool or hand–held tester, and read value of intake air temperature**

PREPARATION:

(a) Connect the OBD II scan tool or hand–held tester to the DLC3.
(b) Turn the ignition switch ON and push the OBD II scan tool or hand–held tester main switch ON.
(c) Select the item ”DIAGNOSIS/ENHANCED OBD II/DATA LIST/ALL/INTAKE AIR”.

CHECK:

Read the temperature value on the OBD II scan tool or the hand–held tester.

OK:

Same value as actual intake air temperature

HINT:

- If there is open circuit, OBD II scan tool or hand–held tester indicates –40˚C (–40˚F).
- If there is short circuit, OBD II scan tool or hand–held tester indicates 140˚C (284˚F) or more.

NG → **–40˚C (–40˚F) ... Go to step 2.**
140˚C (284˚F) or more ... Go to step 4.

OK

Check for intermittent problems
(See page DI–218).

2	Check for open in harness or ECM.

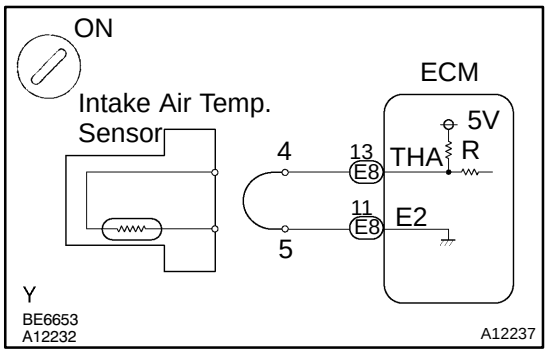

PREPARATION:

(a) Disconnect the mass air flow meter connector.
(b) Connect the sensor wire harness terminals together.
(c) Turn the ignition switch ON.
(d) Select the Item ”DIAGNOSIS/ENHANCED OBD II/DATA LIST/ALL/INTAKE AIR”.

CHECK:

Read the temperature value on the OBD II scan tool or the hand–held tester.

OK:

Temperature value: 140°C (284°F) or more

OK	Confirm good connection at sensor. If OK, replace mass air flow meter.

NG

3	Check for open in harness or ECM.

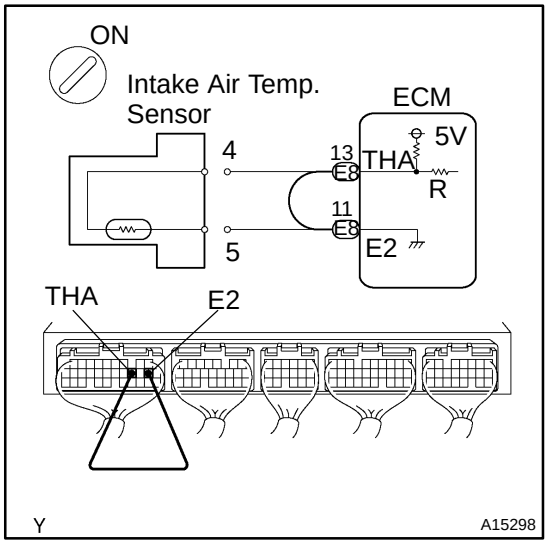

PREPARATION:

(a) Disconnect the mass air flow meter connector.
(b) Remove the glove compartment (See page SF–63).
(c) Connect terminals THA and E2 of the ECM connector together.
(d) Turn the ignition switch ON.
(e) Select the Item ”DIAGNOSIS/ENHANCED OBD II/DATA LIST/ALL/INTAKE AIR”.

HINT:

The mass air flow meter connector is disconnected. Before checking, do a visual and contact check of the pressure of the ECM connector (See page IN–28).

CHECK:

Read the temperature value on the OBD II scan tool or the hand–held tester.

OK:

Temperature value: 140°C (284°F) or more

OK	Open in harness between terminals E2 and THA, repair or replace harness.

NG

Confirm good connection at ECM. If OK, check and replace ECM (See page IN–28).

4	Check for short in harness and ECM.

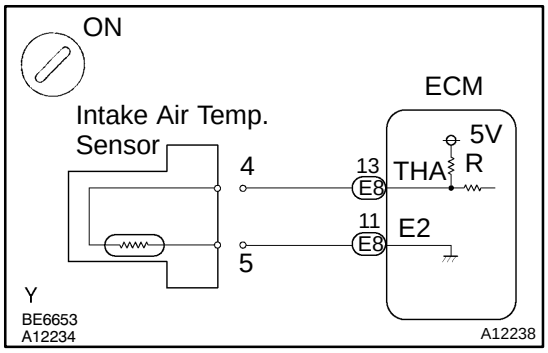

PREPARATION:

(a) Disconnect the mass air flow meter connector.
(b) Turn the ignition switch ON.
(c) Select the Item "DIAGNOSIS/ENHANCED OBD II/DATA LIST/ALL/INTAKE AIR".

CHECK:

Read the temperature value on the OBD II scan tool or the hand–held tester.

OK:

Temperature value: – 40°C (–40°F)

OK	Replace mass air flow meter.

NG

5	Check for short in harness or ECM.

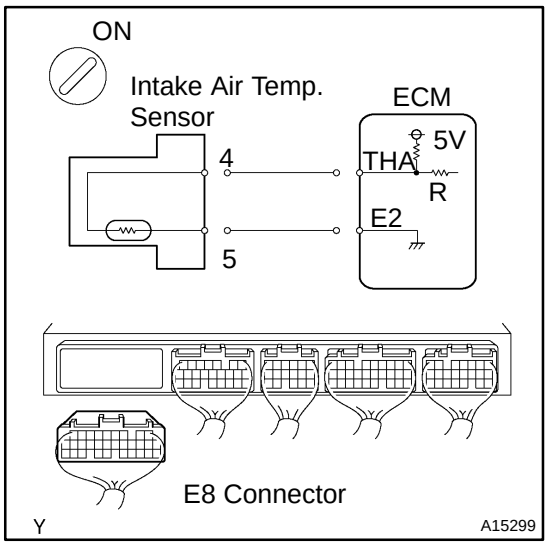

PREPARATION:

(a) Remove the glove compartment (See page SF–63).
(b) Disconnect the E8 ECM connector.

HINT:

The mass air flow meter connector is disconnected.

(c) Turn the ignition switch ON.
(d) Select the Item "DIAGNOSIS/ENHANCED OBD II/DATA LIST/ALL/INTAKE AIR".

CHECK:

Read the temperature value on the OBD II scan tool or the hand–held tester.

OK:

Temperature value: – 40°C (–40°F)

OK	Repair or replace harness or connector.

NG

Check and replace ECM (See page IN–28).

DIA8Y–02

DTC	P0115	Engine Coolant Temperature Circuit

DTC	P0117	Engine Coolant Temperature Circuit Low Input

DTC	P0118	Engine Coolant Temperature Circuit High Input

CIRCUIT DESCRIPTION

A thermistor built in the engine coolant temperature sensor changes the resistance value according to the engine coolant temperature.

The structure of the sensor and connection to the ECM is the same as those of the intake air temperature circuit malfunction shown on page DI–254.

If the ECM detects the DTC P0115, P0117 or P0118, it operates the fail – safe functions in witch the engine coolant temperature is assumed to be 80˚C (176˚F)

DTC No.	Proceed to	DTC Detection Condition	Trouble Area
P0115	Step 1	Open or short in engine coolant temp. sensor circuit for 0.5 sec.	• Open or short in engine coolant temp. sensor circuit • Engine coolant temp. sensor • ECM
P0117	Step 4	Short in engine coolant temp. sensor circuit for 0.5 sec.	
P0118	Step 2	Open in engine coolant temp. sensor circuit for 0.5 sec.	

HINT:

After confirming DTC P0115, P0117 or P0118 use the hand–held tester or the OBD II scan tool to confirm the engine coolant temperature from the ”DIAGNOSIS/ENHANCED OBD II/DATA LIST/ALL”.

Temperature Displayed	Malfunction
–40˚C (–40˚F)	Open circuit
140˚ (284˚F) or more	Short circuit

WIRING DIAGRAM

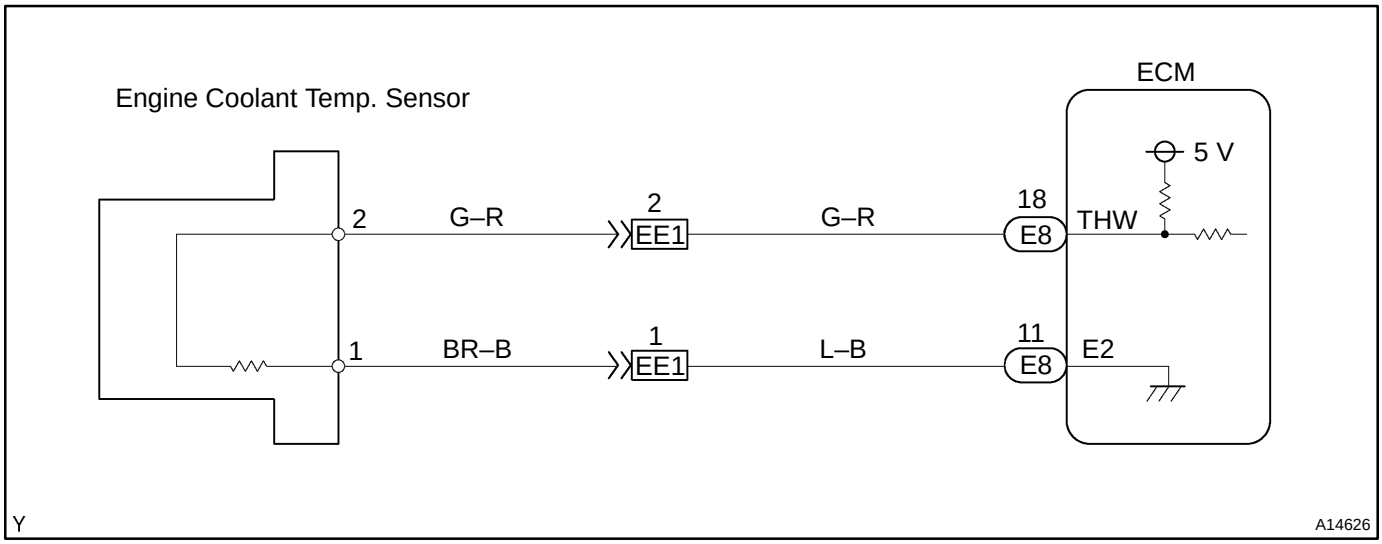

INSPECTION PROCEDURE

HINT:

- If different DTCs that are related to different systems are output simultaneously while terminal E2 is used as a ground terminal, terminal E2 may be open.
- Read freeze frame data using the hand–held tester or the OBD II scan tool, as freeze frame data records the engine conditions when a malfunction is detected. When troubleshooting, it is useful for determining whether the vehicle was running or stopped, the engine was warmed up or not, the air–fuel ratio was lean or rich, etc. at the time of the malfunction.

1	**Connect OBD II scan tool or hand–held tester, and read value of engine coolant temperature.**

PREPARATION:

(a) Connect the OBD II scan tool or hand–held tester to the DLC3.
(b) Turn the ignition switch ON and push the OBD II scan tool or hand–held tester main switch ON.
(c) Select the item "DIAGNOSIS/ENHANCED OBD II/DATA LIST/ALL/COOLANT TEMP".

CHECK:

Read the temperature value on the OBD II scan tool or the hand–held tester.

OK:

Same as actual engine coolant temperature.

HINT:

- If there is open circuit, OBD II scan tool or hand–held tester indicates –40˚C (–40˚F).
- If there is short circuit, OBD II scan tool or hand−held tester indicates 140˚C (284˚F) or more.

NG → **–40˚C (–40˚F) ... Go to step 2.**
140˚C (284˚F) or more ... Go to step 4.

OK

Check for intermittent problems
(See page DI–218).

2	Check for open in harness or ECM.

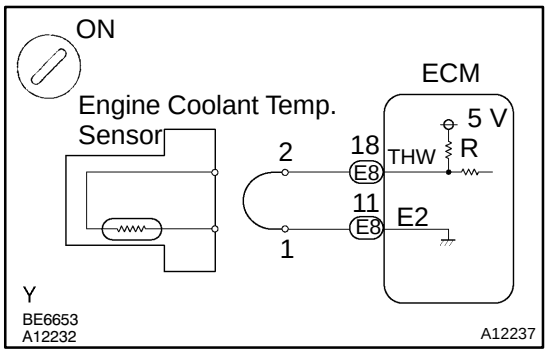

PREPARATION:

(a) Disconnect the engine coolant temperature sensor connector.
(b) Connect the sensor wire harness terminals together.
(c) Turn the ignition switch ON.
(d) Select the item ”DIAGNOSIS/ENHANCED OBD II/DATA LIST/ALL/COOLANT TEMP”.

CHECK:

Read the temperature value on the OBD II scan tool or the hand–held tester.

OK:

Temperature value: 140°C (284°F) or more

OK	Confirm good connection at sensor. If OK, replace engine coolant temperature sensor.

NG

3	Check for open in harness or ECM.

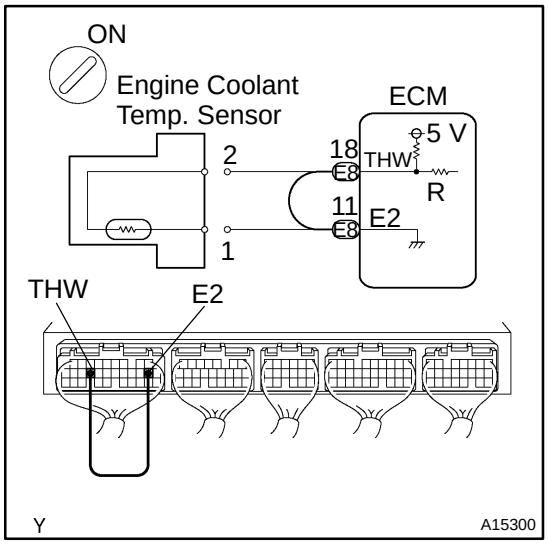

PREPARATION:

(a) Disconnect the engine coolant temperature sensor connector.
(b) Remove the glove compartment (See page SF–63).
(c) Connect terminals THW and E2 of the ECM connector.

HINT:

The engine coolant temperature sensor connector is disconnected. Before checking, do a visual and contact pressure check of the pressure of the ECM connector (See page IN–28).

(d) Turn the ignition switch ON.
(e) Select the item ”DIAGNOSIS/ENHANCED OBD II/DATA LIST/ALL/COOLANT TEMP”.

CHECK:

Read the temperature value on the OBD II scan tool or the hand–held tester.

OK:

Temperature value: 140°C (284°F) or more

OK	Open in harness between terminals E2 and THW, repair or replace harness.

NG

Confirm good connection at ECM. If OK, check and replace ECM (See page IN–28).

4	Check for short in harness and ECM.

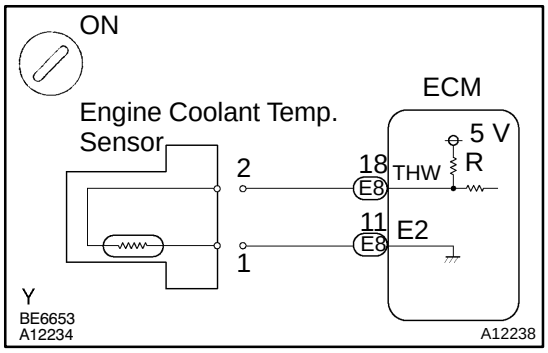

PREPARATION:

(a) Disconnect the engine coolant temperature sensor connector.

(b) Turn the ignition switch ON.

(c) Select the item "DIAGNOSIS/ENHANCED OBD II/DATA LIST/ALL/COOLANT TEMP".

CHECK:

Read the temperature value on the OBD II scan tool or the hand–held tester.

OK:

Temperature value: –40°C (–40°F)

OK → **Replace engine coolant temperature sensor (See page SF–53).**

NG

5	Check for short in harness or ECM.

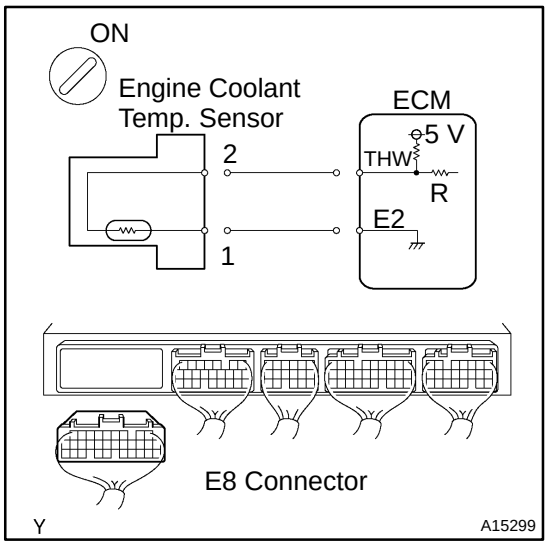

PREPARATION:

(a) Remove the glove compartment (See page SF–63).

(b) Disconnect the E8 ECM connector.

HINT:

The engine coolant temperature sensor connector is disconnected.

(c) Turn the ignition switch ON.

(d) Select the item ”DIAGNOSIS/ENHANCED OBD II/DATA LIST/ALL/COOLANT TEMP”.

CHECK:

Read the temperature value on the OBD II scan tool or the hand–held tester.

OK:

Temperature value: –40°C (–40°F)

OK	Repair or replace harness or connector.

NG

Check and replace ECM (See page IN–28).

DIA8Z–02

DTC	P0116	Engine Coolant Temperature Circuit Range/ Performance Problem

DTC	P0125	Insufficient Coolant Temperature for Closed Loop Fuel Control

CIRCUIT DESCRIPTION

Refer to DTC P0115 on page DI–258.

DTC No.	DTC Detection Condition	Trouble Area
P0116	When THW ⍁ 35˚C (95˚F) and 60˚C (140˚F), THA ≧ –6.7˚C (19.4˚F) when starting engine, conditions (a) and (b) continue: (2 trip detection logic) (a) Vehicle speed is changing (Not stable) (b) Water temp. change is lower than 3˚C (37.4˚F) from water temp. since when starting engine	• Cooling system • Engine coolant temp. sensor
	In case that reading value of water temp. sensor will not change more than 1˚C (33.8˚F) even after repeating 6 trips (detection logic) of adjusting speed pattern with THW more than 60˚C (140˚F) when starting engine	
P0125	If THW < –6.7˚C (20˚F) or THA < –6.7˚C (20˚F) 20 min. or more after starting engine, engine coolant temp. sensor value is 20˚C (68˚F) or less (2 trip detection logic)	
	If THW ⍁ –6.7˚C (20˚F) and THA ≧ –6.7˚C (20˚F) and 10˚C (50˚F) at engine start, 5 min. or more after starting engine, engine coolant temp. sensor value is 20˚C (48˚F) or less (2 trip detection logic)	
	If THW ≧ 10˚C (50˚F) and THA ≧ 10˚C (50˚F) at engine start, 2 min. or more after starting engine, engine coolant temp. sensor value is 20˚C (48˚F) or less (2 trip detection logic)	

INSPECTION PROCEDURE

HINT:

- If DTCs P0115, P0116, P0117, P0118 and P0125 are output simultaneously, engine coolant temperature sensor circuit may be open. Perform the troubleshooting of DTC P0115 first.
- Read freeze frame data using the hand–held tester or the OBD II scan tool, as freeze frame data records the engine conditions when a malfunction is detected. When troubleshooting, it is useful for determining whether the vehicle was running or stopped, the engine was warmed up or not, the air–fuel ratio was lean or rich, etc. at the time of the malfunction.

1	Are there any other codes (besides DTC P0116 and P0125) being output?

YES → Go to relevant DTC chart (See page DI–231).

NO

2	Check thermostat (See page CO–11).

NG → Replace thermostat.

OK →

Replace engine coolant temperature sensor.

DIB1Q–01

DTC	P0120	Throttle Pedal Position Sensor/Switch ”A” Circuit (w/ ETCS)

DTC	P0122	Throttle Pedal Position Sensor/Switch ”A” Circuit Low Input (w/ ETCS)

DTC	P0123	Throttle Pedal Position Sensor/Switch ”A” Circuit High Input (w/ ETCS)

DTC	P0220	Throttle/Pedal Position Sensor/Switch ”B” Circuit (w/ ETCS)

DTC	P0222	Throttle Pedal Position Sensor/Switch ”B” Circuit Low Input (w/ ETCS)

DTC	P0223	Throttle Pedal Position Sensor/Switch ”B” Circuit High Input (w/ ETCS)

DTC	P2135	Throttle/Pedal Position Sensor/Switch ”A”/”B” Voltage Correction (w/ ETCS)

CIRCUIT DESCRIPTION

HINT:

This is the procedure of throttle position sensor (w/ ETCS).

The throttle position sensor is mounted on the throttle body and it have 2 sensors to detect the throttle opening angle and a malfunction of the throttle position sensor.

The voltage applied to the terminals VTA and VTA2 of the ECM changes between 0 V and 5 V in proportion to the opening angle of the throttle valve. The VTA is a signal to indicate the actual throttle valve opening angle which is used for the engine control, and the VTA2 is a signal to indicate the information about the opening angle which is used for detecting a malfunction.

The ECM judges the current opening angle of the throttle valve from these signals input from terminals VTA and VTA2, and the ECM controls the throttle motor to make the throttle valve angle properly in response to the driving condition.

If this DTC is stored, the ECM shuts down the power for the throttle motor and the electromagnetic clutch, and the throttle valve is fully closed by the return spring.

However, the opening angle of the throttle valve can be controlled by the accelerator pedal through the throttle cable.

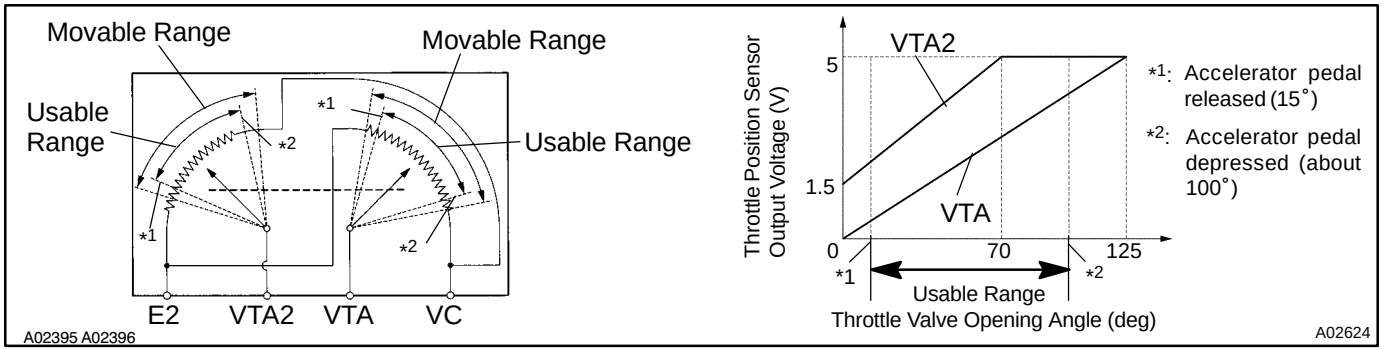

DTC No.	DTC Detection Condition	Trouble Area
Condition (a) of DTC P0120, P0122, P0123, P0220, P0222 or P0223 continues for 2 sec.		• Open or short in throttle position sensor circuit • Throttle position sensor • Wire harness • ECM
P0120	Detection conditions for DTCs P0122 and P0123 are not satisfied but condition (a) is satisfied (a) VTA ≦ 0.2 V or VTA ≧ 4.8 V	
P0122	(a) VTA ≦ 0.2 V	
P0123	(a) VTA ≧ 4.8 V	
P0220	Detection conditions for DTCs P0222 and P0223 are not satisfied but condition (a) is satisfied (a) (VTA2 ≦ 0.5 V) or (VTA2 ≧ 4.97 V and 0.2 V ≦ VTA ≦ 1.8 V)	
P0222	(a) VTA2 ≦ 0.5 V	
P0223	(a) (VTA2 ≧ 4.97 V) and (0.2 V ≦ VTA ≦ 1.8 V)	
P2135	Condition (a) continues for 2 sec. or more, or condition (b) continues for 0.4 sec. or more: (a) |VTA – VTA2| ≦ 0.02 V (b) VTA ≦ 0.2 V and VTA2 ≦ 0.5 V	

HINT:

DTC No.	Main Trouble Area
P0122	• Throttle position sensor • VTA circuit open • VC circuit open (when the VC circuit is open, DTCs P0222 and P2135 are also output simultaneously)
P0123	• Throttle position sensor • E2 circuit open
P0222	• Throttle position sensor • VTA2 circuit open • VC circuit open (when the VC circuit is open, DTCs P0122 and P2135 are also output simultaneously))
P0223	• Throttle position sensor
P2135	• VTA and VTA2 circuit are short–circuited • VC circuit open • Throttle position sensor

HINT:

- After confirming DTC P0120, P0122, P0123, P0220, P0222, P0223 and P2135 use the OBD II scan tool or the hand–held tester to confirm the throttle valve opening percentage and closed throttle position switch condition.
- The THROTTLE POS means VTA signal as well as the THROTTLE POS #2 for the VTA2 signal

Throttle valve opening position expressed as percentage and voltage				Trouble area
Accelerator pedal released		Accelerator pedal depressed		
THROTTLE POS	THROTTLE POS #2	THROTTLE POS	THROTTLE POS #2	
0 %	0 V	0 %	0 V	VC circuit open
0 %	2.0 – 2.9 V	0 %	4.7 – 5.1 V	VTA circuit open or ground short
8 – 20 %	0 V	64 – 96 %	0 V	VTA2 circuit open or ground short
100 %	5 V	100 %	5 V	E2 circuit open

WIRING DIAGRAM

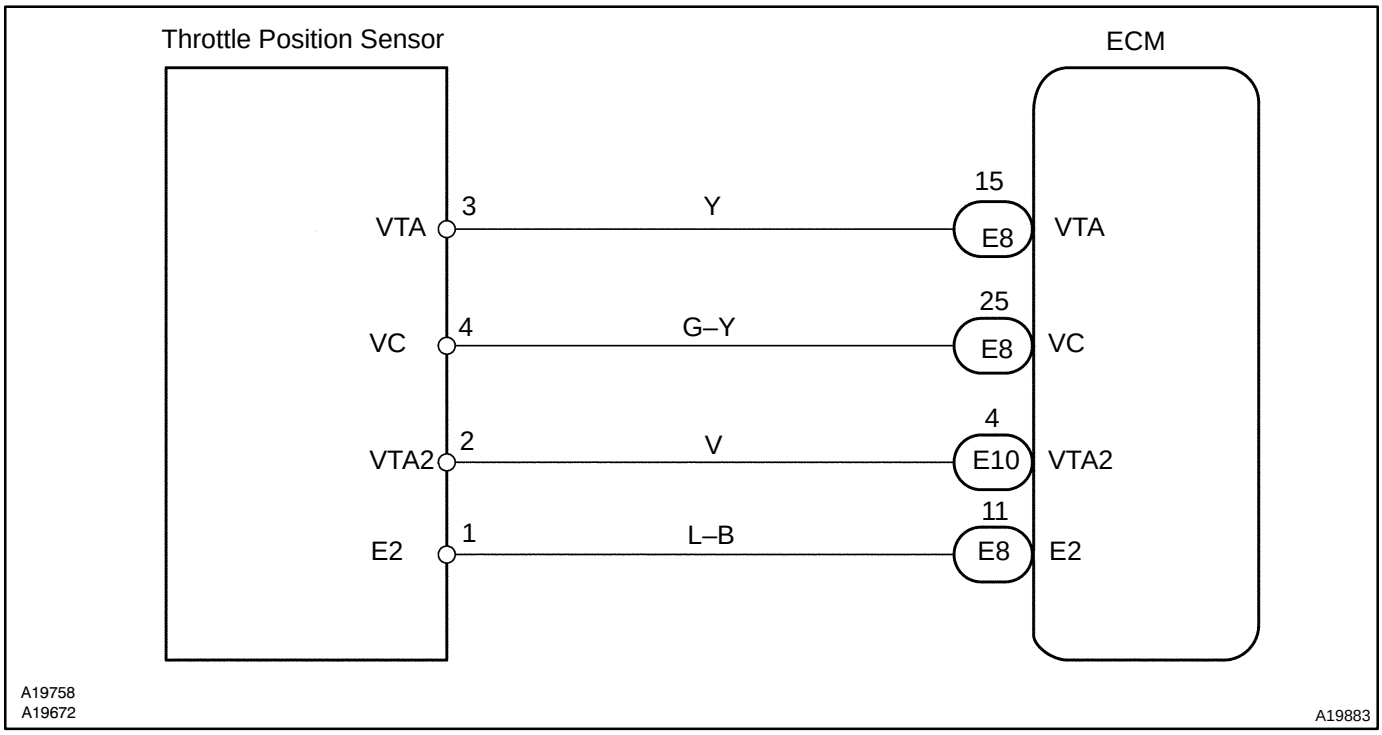

INSPECTION PROCEDURE

HINT:

- If different DTCs that are related to different systems are output simultaneously while terminal E2 is used as a ground terminal, terminal E2 may be open.
- Read freeze frame data using the hand–held tester or the OBD II scan tool, freeze frame records the engine conditions when a malfunction is detected. When troubleshooting, it is useful for determining whether the vehicle was running or stopped, the engine was warmed up or not, the air–fuel ratio was lean or rich, etc. at the time of the malfunction.

Hand–held tester:

1	**Connect hand–held tester, and read throttle valve opening percentage.**

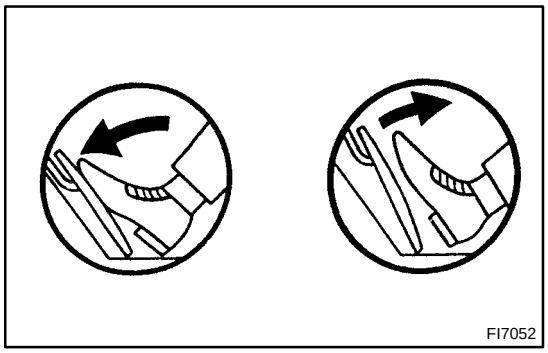

PREPARATION:

(a) Connect the hand–held tester to the DLC3.

(b) Turn the ignition switch ON and push the hand–held tester main switch ON.

CHECK:

Read the throttle valve opening percentage for the VTA circuit and read the voltage for the VTA2 circuit.

OK:

Accelerator pedal	Throttle valve opening position expressed as percentage (VTA)	Voltage (VTA2)
Released	8 – 20 %	2.0 – 2.9 V
Depressed	64 – 96 %	4.7 – 5.1 V

OK → **Check and replace ECM (See page IN–28).**

NG

2	**Check throttle position sensor (See page SF–28).**

NG → **Replace throttle position sensor (See page SF–30).**

OK

3	Check voltage between terminals VC and E2 of ECM connector.

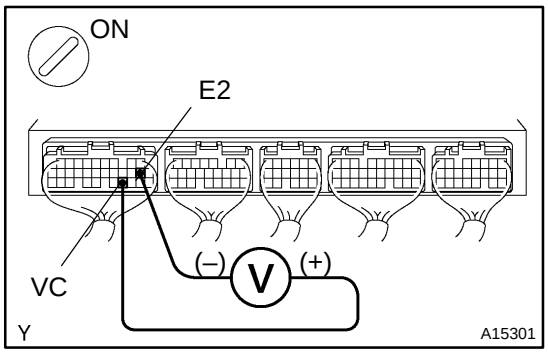

PREPARATION:

(a) Remove the glove compartment (See page SF–63).

(b) Turn the ignition switch ON.

CHECK:

Measure the voltage between terminals VC and E2 of the ECM connector.

OK:

Voltage: 4.5 – 5.5 V

NG	Check and replace ECM (See page IN–28).

OK

4	Check voltage between terminals VTA and E2, and VTA2 and E2 of ECM connector.

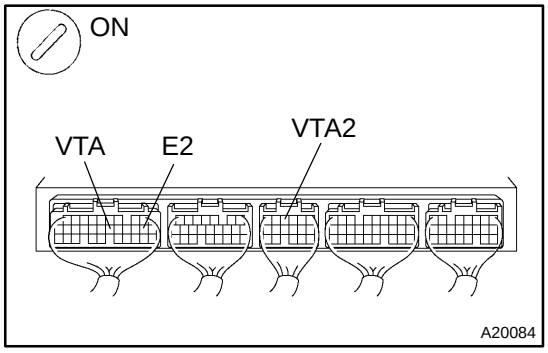

PREPARATION:

(a) Remove the glove compartment (See page SF–63).

(b) Turn the ignition switch ON.

CHECK:

Measure the voltage between terminals VTA and E2, and VTA2 and E2 of the ECM connector.

OK:

Accelerator pedal	Voltage	
	VTA – E2	VTA2 – E2
Released	0.4 – 1.0 V	2.0 – 2.9 V
Depressed	3.2 – 4.8 V	4.7 – 5.1 V

OK	Check and replace ECM (See page IN–28).

NG

Check for open and short in harness and connector in VC, VTA, VTA and E2 circuits between ECM and throttle position sensor (See page IN–28).

OBD II scan tool (excluding hand–held tester):

1	**Check throttle position sensor (See page SF–28).**

NG → **Replace throttle position sensor (See page SF–30).**

OK

2	**Check voltage between terminals VC and E2 of ECM connector.**

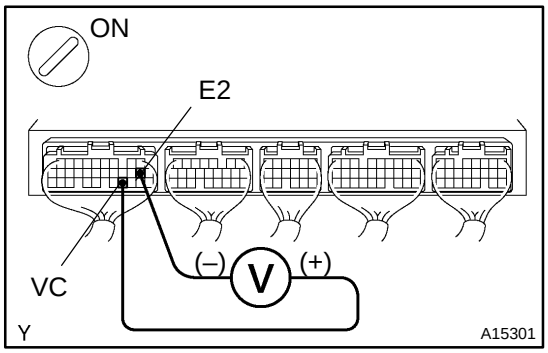

PREPARATION:
(a) Remove the glove compartment (See page SF–63).
(b) Turn the ignition switch ON.

CHECK:
Measure the voltage between terminals VC and E2 of the ECM connector.

OK:
Voltage: 4.5 – 5.5 V

NG → **Check and replace ECM (See page IN–28).**

OK

3	**Check voltage between terminals VTA and E2, and VTA2 and E2 of ECM connector.**

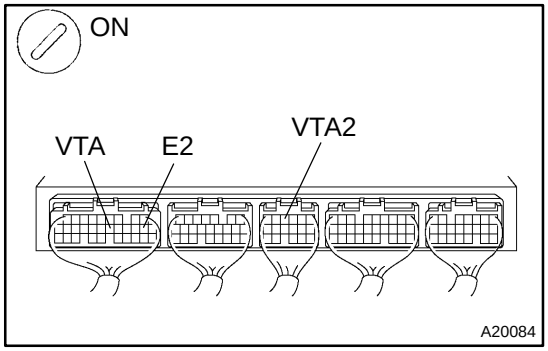

PREPARATION:
(a) Remove the glove compartment (See page SF–63).
(b) Turn the ignition switch ON.

CHECK:
Measure the voltage between terminals VTA and E2, and VTA2 and E2 of the ECM connector.

OK:

Accelerator pedal	Voltage	
	VTA – E2	VTA2 – E2
Released	0.4 – 1.0 V	2.0 – 2.9 V
Depressed	3.2 – 4.8 V	4.7 – 5.1 V

OK → **Check and replace ECM (See page IN–28).**

NG

Check for open and short in harness and connector in VC, VTA, VTA and E2 circuits between ECM and throttle position sensor (See page IN–28).

DIB1U–01

DTC	P0171	System too Lean (Bank 1)

DTC	P0172	System too Rich (Bank 1)

CIRCUIT DESCRIPTION

The fuel trim is related to the feedback compensation value, not to the basic injection time. The fuel trim includes the short–term fuel trim and the long–term fuel trim. The short–term fuel trim is the short–term fuel compensation used to maintain the air–fuel ratio at its ideal theoretical value. The signal from the A/F sensor is approximately proportional to the existing air–fuel ratio. Comparing it with the ideal theoretical value, the ECM reduces fuel volume immediately if the air–fuel ratio is RICH and increases fuel volume if it is LEAN. The long–term fuel trim compensates for the deviation from the central value of the short–term fuel trim which is stored up by each engine tolerance, and the deviation from the central value due to the passage of time and changes of environment. If both the short–term fuel trim and the long–term fuel trim exceed a certain value, it is detected as a malfunction and the MIL lights up.

DTC No.	DTC Detection Condition	Trouble Area
P0171	When air fuel ratio feedback is stable after warming up engine, fuel trim is considerably in error on LEAN side (2 trip detection logic)	• Air induction system • Injector blockage • Mass air flow meter • Engine coolant temp. sensor • Fuel pressure • Gas leakage in exhaust system • Open or short in A/F sensor (bank 1 sensor 1) circuit • A/F sensor (bank 1 sensor 1) • PCV valve and hose • PCV hose connection • EFI main relay • A/F sensor heater and relay circuit
P0172	When air fuel ratio feedback is stable after warming up engine, fuel trim is considerably in error on RICH side (2 trip detection logic)	• Injector leak or blockage • Mass air flow meter • Engine coolant temp. sensor • Ignition system • Fuel pressure • Gas leakage in exhaust system • Open or short in A/F sensor (bank 1 sensor 1) circuit • A/F sensor (bank 1 sensor 1) • EFI main relay • A/F sensor heater and relay circuit

HINT:

- When DTC P0171 is recorded, the actual air–fuel ratio is on the LEAN side. When DTC P0172 is recorded, the actual air–fuel ratio is on the RICH side.
- If the vehicle runs out of fuel, the air–fuel ratio is LEAN and DTC P0171 is recorded. The MIL then comes on.
- If the total of the short–term fuel trim value and long–term fuel trim value is within ± 35 % (75˚C) or more), the system is functioning normally.
- The A/F sensor (bank 1 sensor 1) output voltage and the short–term fuel trim value can be read using the OBD II scan tool or the hand–held tester.

- The ECM controls the voltage of the AF1+ and AF1– terminals of the ECM to the fixed voltage. Therefore, it is impossible to confirm the A/F sensor output voltage without the OBD II scan tool or the hand–held tester.
- OBD II scan tool (excluding hand–held tester) displays the one fifth of the A/F sensor (bank 1 sensor 1) output voltage which is displayed on the hand–held tester.

WIRING DIAGRAM

Refer to DTC P0134 on page DI–278.

INSPECTION PROCEDURE

HINT:

Hand–held tester only:

The narrowing down the trouble area is possible by performing ACTIVE TEST of the following ”A/F CONTROL” (A/F sensor, heated oxygen sensor or another can be distinguished).

Perform ACTIVE TEST by hand–held tester (A/F CONTROL).

HINT:

”A/F CONTROL” is an ACTIVE TEST which change the injection volume to –12.5 % or +25 %.

(1) Connect the hand–held tester to the DLC3 on the vehicle.
(2) Turn the ignition switch ON.
(3) Warm up the engine with the engine speed at 2,500 rpm for approx. 90 sec.
(4) Select the item ”DIAGNOSIS/ENHANCED OBD II/ACTIVE TEST/ A/F CONTROL”.
(5) Perform ”A/F CONTROL” when idle condition (press the ← or → button).

Result:

A/F sensor reacts in synchronizing with increase and decrease of injection volume (+25 % → rich output: Less than 3.0 V, –12.5 % → lean output: More than 3.35 V)

Heated oxygen sensor reacts in synchronizing with increase and decrease of injection volume (+25 % → rich output: More than 0.55 V, –12.5 % → lean output: Less than 0.4 V)

NOTICE:

However, there is a few second delay in the A/F sensor output. And there is about 20 seconds delay in the heated oxygen sensor.

	Output voltage of A/F sensor (sensor 1)	Output voltage of heated oxygen sensor (sensor 2)	Mainly suspect trouble area
Case 1	Injection volume +25 % –12.5 % Output voltage More than 3.35 V Less than 3.0 V **OK**	Injection volume +25 % –12.5 % Output voltage More than 0.55 V Less than 0.4 V **OK**	—
Case 2	Injection volume +25 % –12.5 % Output voltage No reaction **NG**	Injection volume +25 % –12.5 % Output voltage More than 0.55 V Less than 0.4 V **OK**	A/F sensor (A/F sensor, heater, A/F sensor circuit)
Case 3	Injection volume +25 % –12.5 % Output voltage More than 3.35 V Less than 3.0 V **OK**	Injection volume +25 % –12.5 % Output voltage No reaction **NG**	Heated oxygen sensor (heated oxygen sensor, heater, heated oxygen sensor circuit)
Case 4	Injection volume +25 % –12.5 % Output voltage No reaction **NG**	Injection volume +25 % –12.5 % Output voltage No reaction **NG**	Extremely rich or lean of the actual air–fuel ratio (Injector, fuel pressure, gas leakage in exhaust system, etc)

The following procedure of A/F CONTROL enable that to check its output (show its graph indication) of A/F sensor and heated oxygen sensor.
To display the graph indication. Select and push the ”YES or NO” button 2 data ”AFS B1S1 and O2S B1S2” or ”AFS B2S1 and O2S B2S2” and press button ”4” after selecting ”ACTIVE TEST/ A/F CONTROL/USER DATA”.
HINT:

- A low A/F sensor voltage could be caused by a rich air fuel mixture. Check for conditions that would cause the engine to run rich.
- A high A/F sensor voltage could be caused by a lean air fuel mixture. Check for conditions that would cause the engine to run lean.
- Read freeze frame data using the hand–held tester or the OBD II scan tool, as freeze frame data records the engine conditions when a malfunction is detected. When troubleshooting, it is useful for determining whether the vehicle was running or stopped, the engine was warmed up or not, the air–fuel ratio was lean or rich, etc. at the time of the malfunction.

1	Check air induction system (See page SF–1).

NG → Repair or replace.

OK

2	Check connection of PCV valve and hose

NG → Repair or replace PCV valve and hose

OK

3	Check injector injection (See page SF–19).

NG → Replace injector.

OK

4	Check mass air flow meter (See page SF–26) and engine coolant temperature sensor (See page SF–54).

NG → Repair or replace.

OK

5	Check for spark and ignition (See page IG–1).

NG → Repair or replace.

OK

6	**Check fuel pressure (See page SF–5).**

NG → **Check and repair fuel pump, pressure regulator, fuel pipe line and filter (See page SF–1).**

OK

7	**Check gas leak on exhaust system.**

NG → **Repair or replace.**

OK

8	**Connect the OBDII scan tool or hand–held tester and read value for voltage output of A/F sensor.**

PREPARATION:

(a) Connect the hand–held tester or the OBD II scan tool to the DLC 3.
(b) Warm up the A/F sensor (bank 1 sensor 1) with the engine at 2,500 rpm for approximately 90 seconds.
(c) Read A/F sensor voltage on the OBD II scan tool or hand–held tester.

CHECK:

(a) Hand–held tester only:
Select the ”DIAGNOSIS/ENHANCED OBD II/SNAPSHOT/MANUAL SNAPSHOT/USER DATA” mode on the hand–held tester.
(b) Select ”AFS B1 S1/ENGINE SPD” and press button ”YES”.
(c) Monitor the A/F sensor voltage carefully.
(d) Check the A/F sensor voltage under the condition as follows.
(1) Allow engine to idle for 30 seconds.
(2) Engine is racing at approx. 2,500 rpm (when engine revolution is not suddenly changed).
(3) Raise the engine speed to 4,000 rpm and release the accelerator pedal fully closed quickly.

OK:

Standard:
Condition (1) and (2)
Voltage change a little in the vicinity of 3.3 V (0.66 V)* (between approx. 3.1 – 3.5 V) as shown in the illustration.
Condition (3)
A/F ratio sensor voltage increase to 3.8 V (0.76 V)* or more during engine deceleration (when fuel cut) as shown in the illustration.

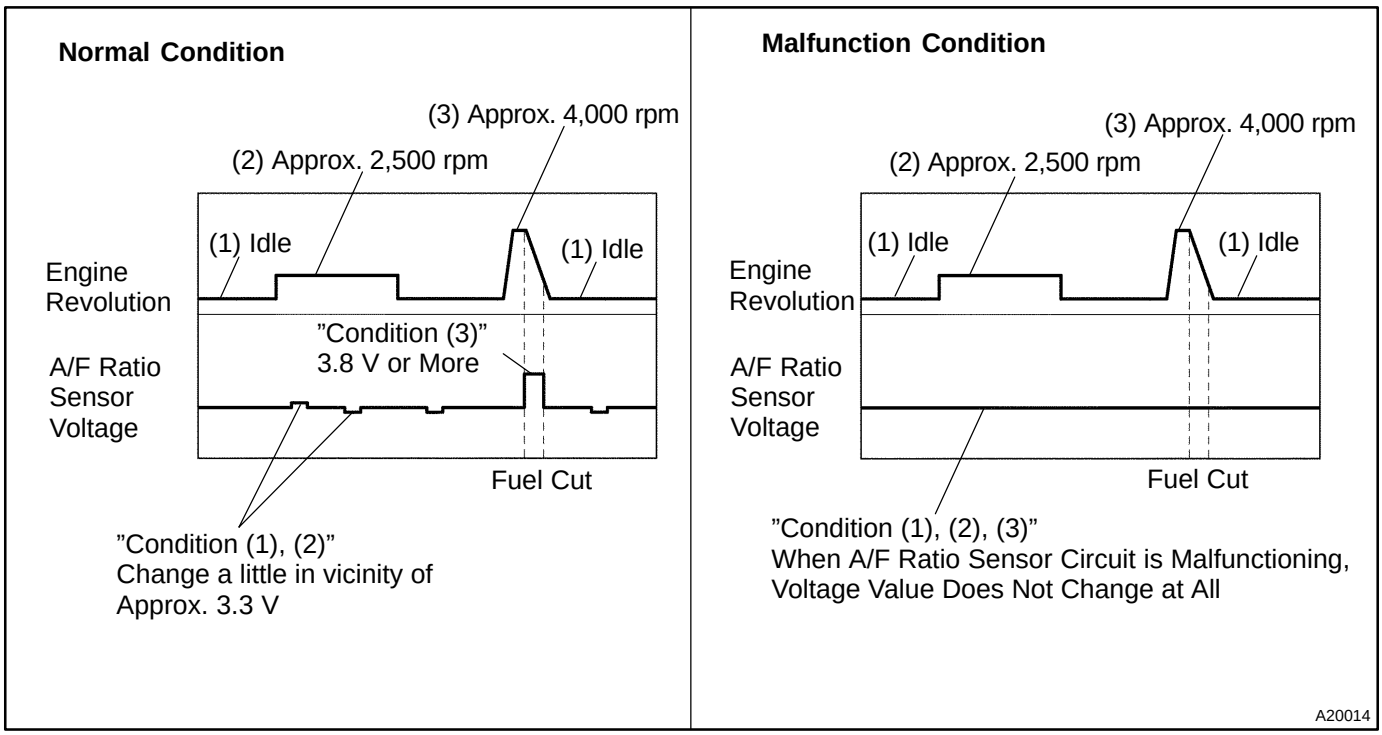

HINT:

- Whenever the output voltage of the A/F sensor remains at approx. 3.3 V (0.660 V)* (see dwg. 2) under any conditions as well as the above conditions, the A/F sensor may have an open–circuit. (This will happen also when the A/F sensor heater has an open–circuit.)
- Whenever the output voltage of the A/F sensor remains at a certain value of approx. 3.8 V (0.76 V)* or more, or 2.8 V (0.56 V)* or less (see dwg. 2) under any conditions as well as the above conditions, the A/F sensor may have a short–circuit.
- The ECM will stop fuel injection (fuel cut) during engine deceleration. This will cause a lean condition and should result in a momentary increase in A/F ratio sensor voltage.
- The ECM must establish a closed throttle position learned value to perform fuel cut. If the battery terminal has been disconnected, the vehicle must be driven over 10 mph to allow the ECM to relearn the closed throttle position.
- When the vehicle is driven:
  In the case that the output voltage of the A/F sensor is below 2.8 V (0.76 V)* during fuel enrichment (for example, when the vehicle tries to overtake another vehicle on a highway, the vehicle speed is suddenly increased with the accelerator pedal fully depressed), the A/F sensor are functioning normally.
- The A/F sensor is a current output element, and therefore the current is converted into voltage inside the ECM. If measuring voltage at connectors of A/F ratio sensor or ECM, you can obtain a constant voltage.

*: When using the OBD II scan tool (excluding hand–held tester).

OK	**Go to step 16.**

NG

9	Check resistance of A/F sensor heater.

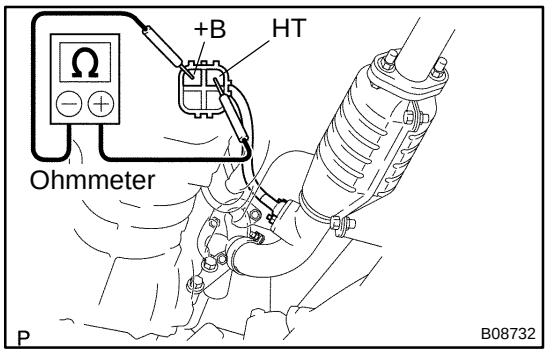

PREPARATION:
Disconnect the sensor connector.
CHECK:
Using an ohmmeter, measure the resistance between terminals +B and HT.
OK:

at 20°C (68°F)	0.8 – 1.4 Ω
at 800°C (1,472°F)	1.8 – 3.2 Ω

NG → **Replace A/F sensor.**

OK

10	Check EFI main relay (Marking : EFI).

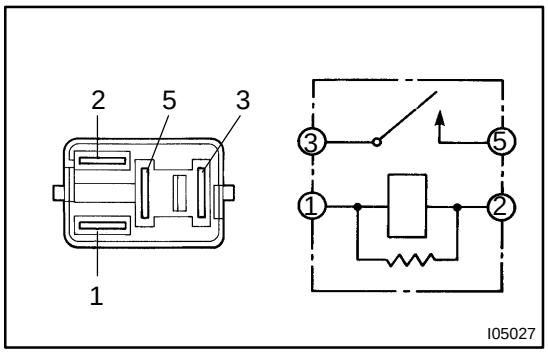

PREPARATION:
Remove the EFI main relay from RB No. 2.
CHECK:
Inspect the EFI main relay.
OK:

Condition	Tester connection	Specified condition
Constant	1 – 2	Continuity
	3 – 5	No continuity
Apply B+ between terminals 1 and 2.	3 – 5	Continuity

NG → **Replace EFI main relay**

OK

11	Check for open and short in harness and connector between ECM and A/F sensor (bank 1 sensor 1) (See page IN–28).

NG → **Repair or replace harness or connector.**

OK

12	Replace A/F sensor.

GO

13	Perform confirmation driving pattern (See page DI–421).

GO

14	Is there DTC P0171 or P0172 being output again?

YES → Check and replace ECM (See page IN–28) and perform confirmation driving pattern (See page DI–421).

NO

15	Did vehicle run out of fuel in past?

NO → Check for intermittent problems (See page DI–218).

YES

DTC P0171 or P0172 is caused by shortage of fuel.

16	Perform confirmation driving pattern (See page DI–421).

GO

17	Is there DTC P0171 or P0172 being output again?

NO → Go to step 20.

YES

18	Replace A/F sensor.

GO

19	Are there DTC P0171 and/or P0172 being output again ?

YES → Check and replace ECM (See page IN–28) and perform confirmation driving pattern (See page DI–421).

NO

20	Did vehicle run out of fuel in past?

NO → Check for intermittent problems (See page DI–218).

YES

DTC P0171 or P0172 is caused by shortage of fuel.

DIB1W–01

DTC	P0325	Knock Sensor 1 Circuit (Bank 1 or Single Sensor)

DTC	P0330	Knock Sensor 2 Circuit (Bank 2)

CIRCUIT DESCRIPTION

The knock sensors are fitted on the right bank and left bank of the cylinder block to detect the engine knocking. Each this sensor contains a piezoelectric element which generates a voltage when it becomes deformed, which occurs when the cylinder block vibrates due to the knocking. If the engine knocking occurs, the ignition timing is retarded to suppress it.

DTC No.	DTC Detection Condition	Trouble Area
P0325	No knock sensor 1 signal to ECM with engine speed between 1,700 rpm and 5,400 rpm	• Open or short in knock sensor 1 circuit • Knock sensor 1 (looseness) • ECM
P0330	No knock sensor 2 signal to ECM with engine speed between 1,700 rpm and 5,400 rpm	• Open or short in knock sensor 2 circuit • Knock sensor 2 (looseness) • ECM

WIRING DIAGRAM

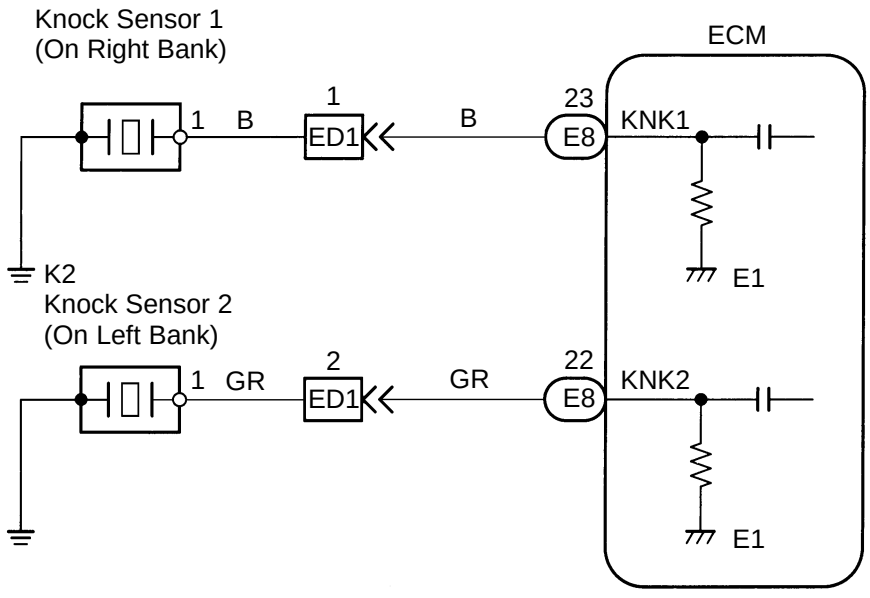

A14856

INSPECTION PROCEDURE

HINT:

- DTC P0325 is for the right bank knock sensor circuit.
- DTC P0330 is for the left bank knock sensor circuit.

- Read freeze frame data using the hand–held tester or the OBD II scan tool, as freeze frame data records the engine conditions when a malfunction is detected. When troubleshooting, it is useful for determining whether the vehicle was running or stopped, the engine was warmed up or not, the air–fuel ratio was lean or rich, etc. at the time of the malfunction.

1	**Connect OBD II scan tool or hand–held tester, and check knock sensor circuit.**

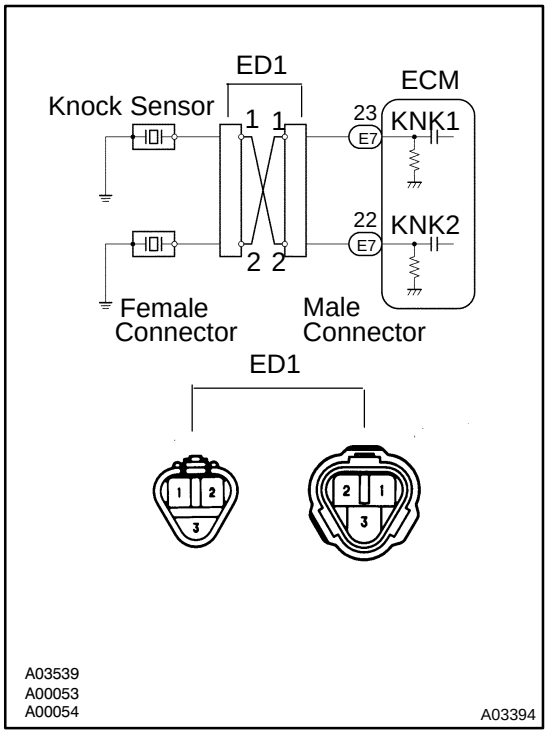

PREPARATION:

(a) Connect the OBD II scan tool or hand–held tester to the DLC3.

(b) Disconnect the ED1 connector.

(c) Connect the terminals of the disconnected ED1 male connector and ED1 female as follows.

Male connector – Female connector
Terminal 1 – Terminal 2
Terminal 2 – Terminal 1

(d) Turn the ignition switch ON and push the OBDII scan tool or hand–held tester main switch ON.

(e) After the engine is warmed up, perform quick racing to 4,000 rpm 3 times.

CHECK:

Check the DTC.

RESULT:

Type I	DTC same as when vehicle brought in P0325 → P0325 or P0330 → P0330
Type II	DTC different to when vehicle brought in P0325 → P0330 or P0330 → P0325

Reference: INSPECTION USING OSCILLOSCOPE

- With the engine racing (4,000 rpm), Check the waveform between terminals KNK1, KNK2 of the ECM connector and body ground.

HINT:

The correct waveform is as shown.

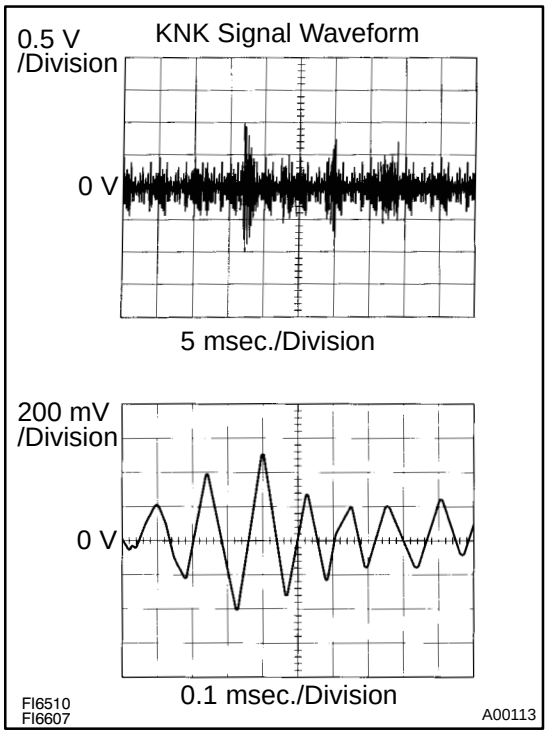

- Spread the time on the horizontal axis, and confirm that period of the wave is 0.141 msec.
  (Normal mode vibration frequency of knock sensor: 7.1 kHz)

HINT:

If normal mode vibration frequency is not 7.1 kHz, the sensor is malfunctions or ECM (terminal KNK1, 2).

Type II	Go to step 3.

Type I

2	Check for open and short in harness and connector between ED1 connector and ECM (See page IN–28).

NG	Repair or replace harness or connector.

OK

Check and replace ECM (See page IN–28).

3	Check for open and short in harness and connector between ED1 connector and knock sensor (See page IN–28).

HINT:

- If DTC P0325 has changed to P0330 check the knock sensor circuit on the right bank side.
- If DTC P0330 has changed to P0325 check the knock sensor circuit on the left bank side.

NG	Repair or replace harness or connector.

OK

Replace knock sensor.

DI0S5–17

DTC	P0335	Crankshaft Position Sensor ”A” Circuit

DTC	P0339	Crankshaft Position Sensor ”A” Circuit

CIRCUIT DESCRIPTION

The crankshaft position sensor, which detects the engine speed and crankshaft angle signal (NE signal), has been installed on the oil pump body.
The NE signal plate has 34 teeth. The NE signal sensor generates 34 signals at every engine revolution. The engine ECM detects the crankshaft angle and the engine speed based on the NE signals, and idetify the cylinder on the G2 (Camshaft position sensor) and NE signals.

DTC No.	DTC Detecting Condition	Trouble Area
P0335	No crankshaft position sensor signal to ECM during cranking (2 trip detection logic)	• Open or short in crankshaft position sensor circuit • Crankshaft position sensor • Crankshaft timing pulley • ECM
	No crankshaft position sensor signal to ECM with engine speed 600 rpm or more (2 trip detection logic)	
P0339	In condition (a), (b) and (c), when no crankshaft position sensor (NE) signal is input for 0.05 sec. or more. (a) Engine revolution 1,000 rpm or more (b) STA signal is OFF (c) 3 sec. or more has been lapsed after STA signal is switched from ON to OFF.	

WIRING DIAGRAM

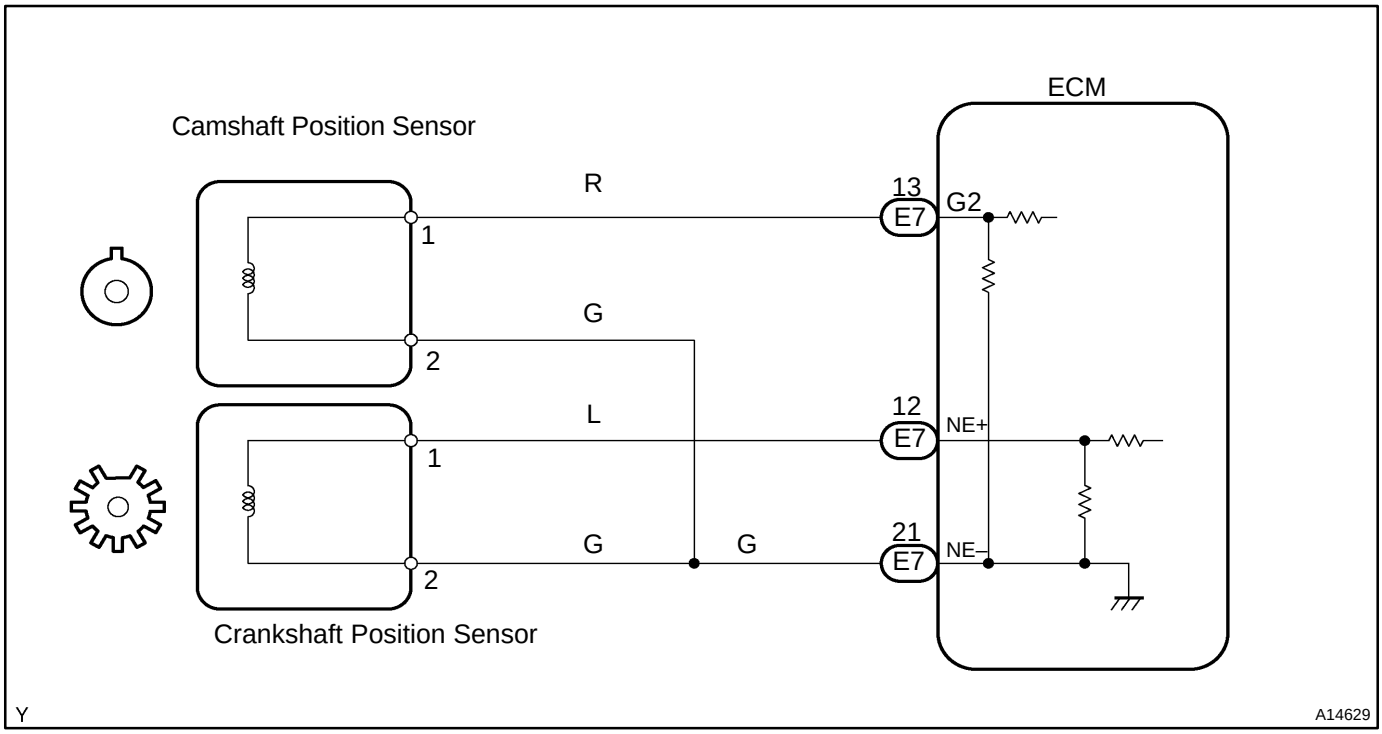

INSPECTION PROCEDURE

HINT:

- Perform a troubleshooting of DTC P0335 first. If no trouble is found, troubleshoot the following mechanical systems.
- Read freeze frame data using the hand–held tester or the OBD II scan tool, as freeze frame data records the engine conditions when a malfunction is detected. When troubleshooting it is useful for determining whether the vehicle was running or stopped, the engine was warmed up or not, the air–fuel ratio was lean or rich, etc. at the time of the malfunction.

1	**Check resistance of crankshaft position sensor (See page IG–1).**

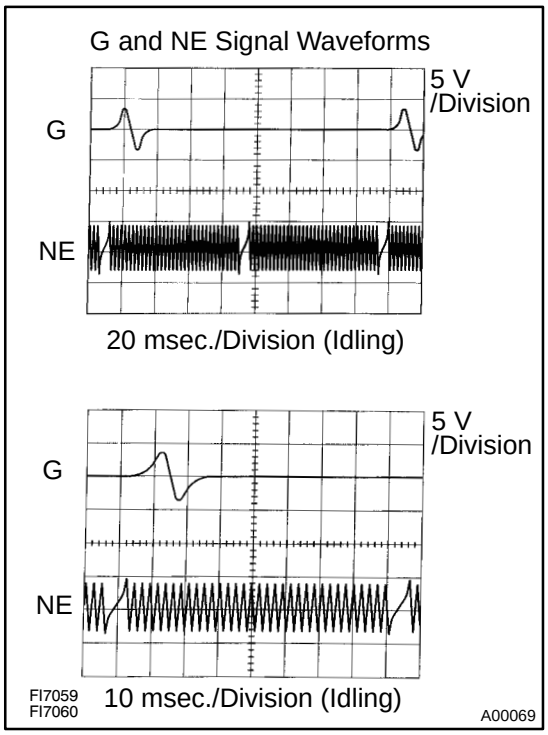

Reference: INSPECTION USING OSCILLOSCOPE

During cranking or idling, check the waveforms between terminals G2 and NE–, and NE+ and NE– of the ECM connector.

HINT:

The correct waveforms are as shown.

NG → **Replace crankshaft position sensor.**

OK

2	**Check for open and short in harness and connector between ECM and crankshaft position sensor (See page IN–28).**

NG → **Repair or replace harness or connector.**

OK

3	**Inspect sensor installation and teeth of crankshaft timing pulley.**

NG → **Tighten the sensor. Replace crankshaft timing pulley.**

OK

Check and replace ECM (See page IN–28).

DTC	P0340	Camshaft Position Sensor ”A” Circuit (Bank 1 or Single Sensor)

DTC	P0341	Camshaft Position Sensor ”A” Circuit Range/Performance (Single Sensor)

CIRCUIT DESCRIPTION

The camshaft position sensor (G2 signal) consists of a magnet, iron core and pickup coil.
The G signal plate has 1 tooth on its outer circumference and is mounted on the RH camshaft timing pulley. When the camshafts rotate, the protrusion on the signal plate and the air gap on the pickup coil change, causing fluctuations in the magnetic field and generating an electromotive force in the pickup coil.
The NE signal plate has 34 teeth and is mounted on the crankshaft timing pulley. The NE signal sensor generates 34 signals at every engine revolution. The engine ECM detects the crankshaft angle and the engine speed based on the NE signals, and idetify the cylinder on the G2 (Camshaft position sensor) and NE signals.

DTC No.	DTC Detection Condition	Trouble Area
P0340	No camshaft position sensor signal to ECM during cranking (2 trip detection logic)	• Open or short in camshaft position sensor circuit • Camshaft position sensor • RH camshaft timing pulley • Jumping teeth of timing belt • ECM
	No camshaft position sensor signal to ECM with engine speed 600 rpm or more (1 trip detection logic)	
P0341	While crankshaft rotates twice, camshaft position sensor signal will be input to ECM 12 times or more (1 trip detection logic)	

HINT:

- DTC P0340 indicate a malfunction related to the camshaft position sensor (+) circuit. (Wire harness (ECM camshaft position sensor) and camshaft position sensor)
- DTC P0341 indicate a malfunction related to the camshaft position sensor (–) circuit. (Wire harness (ECM camshaft position sensor) and camshaft position sensor)

WIRING DIAGRAM

Refer to DTC P0335 and P0339 on page DI–315.

INSPECTION PROCEDURE

HINT:
Read freeze frame data using the hand–held tester or the OBD II scan tool, as freeze frame records the engine conditions when a malfunction is detected. When troubleshooting, it is useful for determining whether the vehicle was running or stopped, the engine was warmed up or not, the air–fuel ratio was lean or rich, etc. at the time of the malfunction.

1	**Check resistance of camshaft position sensor (See page IG–1).**

Reference: INSPECTION USING OSCILLOSCOPE
Refer to DTC P0335 and P0339 on page DI–315.

NG → **Replace camshaft position sensor.**

OK

2	**Check for open and short in harness and connector between ECM and camshaft position sensor (See page IN–28).**

NG → **Repair or replace harness or connector.**

OK

3	**Inspect sensor installation (See page EM–50) and tooth of RH camshaft timing pulley (See page EM–19).**

NG → **Tighten sensor. Replace RH camshaft timing pulley**

OK

Check and replace ECM (See page IN–28).

DTC	P0451	Evaporative Emission Control System Pressure Sensor/Switch Range/Performance

DTC	P0452	Evaporative Emission Control System Pressure Sensor/Switch Low Input

DTC	P0453	Evaporative Emission Control System Pressure Sensor/Switch High Input

CIRCUIT DESCRIPTION

The vapor pressure sensor, VSV for canister closed valve (CCV) and VSV for pressure switching valve are used to detect abnormalities in the evaporative emission control system.

The ECM decides whether there is an abnormality in the evaporative emission control system based on the vapor pressure sensor signal.

DTC P0451, P0452 or P0453 is recorded by the ECM when the vapor pressure sensor malfunctions.

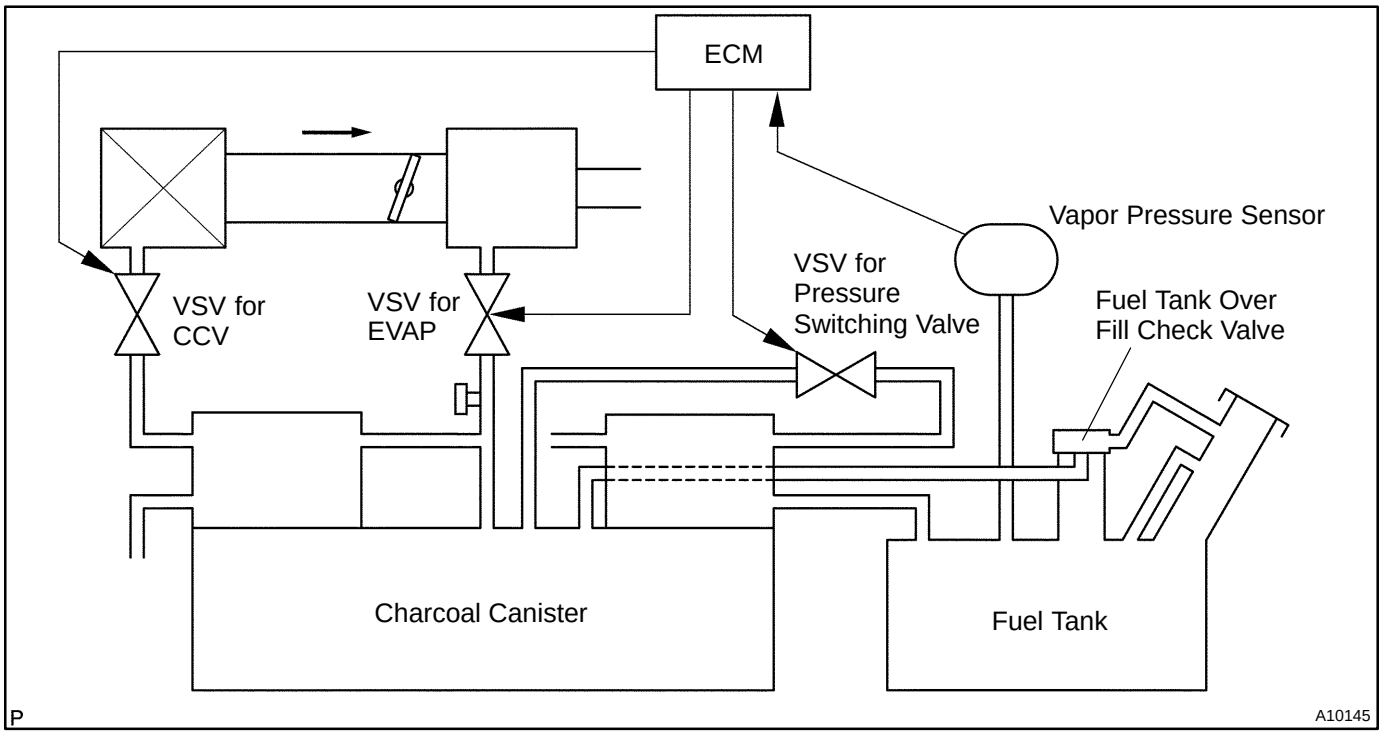

DTC No.	DTC Detecting Condition	Trouble Area
P0451	Vapor pressure sensor output extremely changes under conditions of (a) and (b): (2 trip detection logic) (a) Vehicle speed: 0 km/h (0mph), Engine speed: Idling and VSV for pressure switching valve is OFF (b) vapor pressure sensor value ≧ opening pressure valve of charcoal canister	• Open or short in vapor pressure sensor circuit • Vapor pressure sensor • ECM
P0452	Open in vapor pressure sensor circuit	
P0453	Short in vapor pressure sensor circuit	

WIRING DIAGRAM

Refer to DTC P0441 or P0446 on page DI–328.

INSPECTION PROCEDURE

HINT:

- If DTC P0441 (Purge Flow), P0446 (VSV for CCV or VSV for Pressure switching valve), P0451 P0452 or P0453 (Evaporative Pressure Sensor) is output with DTC P0442 or P0456, first troubleshoot DTC P0441, P0446, P0451. P0452 or P0453. If no malfunction is detected, troubleshoot DTC P0442 or P0456 next.
- Read freeze frame data using OBD II scan tool or hand–held tester. Because freeze frame records the engine conditions when the malfunction is detected. When troubleshooting, it is useful for determining whether the vehicle was running or stopped, the engine was warmed up or not, the air–fuel ratio was lean or rich, etc. at the time of the malfunction.
- When the ENGINE RUN TIME in the freeze frame data is less than 200 seconds, carefully check the VSV for EVAP, charcoal canister and vapor pressure sensor.

1	**Check voltage between terminals VC and E2 of ECM connector (See page DI–361, step 22).**

NG → **Check and replace ECM (See page IN–28).**

OK

2	**Check voltage between terminals PTNK and E2 of ECM connectors (See page DI–361, step 23).**

OK → **Check and replace ECM (See page IN–28).**

NG

3	**Check for open and short in harness and connector between vapor pressure sensor and ECM (See page IN–28).**

NG → **Repair or replace harness or connector.**

OK

Replace vapor pressure sensor.

DTC	P0604	Internal Control Module Random Access Memory (RAM) Error

DTC	P0606	ECM/PCM Processor

DTC	P0607	Control Module Performance

DTC	P0657	Actuator Supply Voltage Circuit / Open

CIRCUIT DESCRIPTION

DTC No.	DTC Detecting Condition	Trouble Area
P0604 P0606 P0607 P0657	ECM malfunction	• ECM

INSPECTION PROCEDURE

HINT:

Read freeze frame data using the hand–held tester or the OBD II scan tool, as freeze frame data records the engine conditions when a malfunction is detected. When troubleshooting, it is useful for determining whether the vehicle was running or stopped, the engine was warmed up or not, the air–fuel ratio was lean or rich, etc. at the time of the malfunction.

Replace ECM.

DI0RK–09

CUSTOMER PROBLEM ANALYSIS CHECK

ENGINE CONTROL SYSTEM Check Sheet

Inspector's Name

Customer's Name		Model and Model Year	
Driver's Name		Frame No.	
Date Vehicle Brought in		Engine Model	
License No.		Odometer Reading	km miles

Problem Symptoms	☐ Engine does not Start	☐ Engine does not crank ☐ No initial combustion ☐ No complete combustion
	☐ Difficult to Start	☐ Engine cranks slowly ☐ Other _____
	☐ Poor Idling	☐ Incorrect first idle ☐ Idling rpm is abnormal ☐ High (rpm) ☐ Low (rpm) ☐ Rough idling ☐ Other _____
	☐ Poor Driveability	☐ Hesitation ☐ Back fire ☐ Muffler explosion (after–fire) ☐ Surging ☐ Knocking ☐ Other _____
	☐ Engine Stall	☐ Soon after starting ☐ After accelerator pedal depressed ☐ After accelerator pedal released ☐ During A/C operation ☐ Shifting from N to D ☐ Other _____
	☐ Others	

Date Problem Occurred		
Problem Frequency		☐ Constant ☐ Sometimes (times per day/month) ☐ Once only ☐ Other _____
Condition When Problem Occurs	Weather	☐ Fine ☐ Cloudy ☐ Rainy ☐ Snowy ☐ Various/Other _____
	Outdoor Temperature	☐ Hot ☐ Warm ☐ Cool ☐ Cold (approx. ____°F/____°C)
	Place	☐ Highway ☐ Suburbs ☐ Inner city ☐ Uphill ☐ Downhill ☐ Rough road ☐ Other _____
	Engine Temp.	☐ Cold ☐ Warming up ☐ After warming up ☐ Any temp. ☐ Other _____
	Engine Operation	☐ Starting ☐ Just after starting (min.) ☐ Idling ☐ Racing ☐ Driving ☐ Constant speed ☐ Acceleration ☐ Deceleration ☐ A/C switch ON/OFF ☐ Other _____

Condition of MIL		☐ Remains on ☐ Sometimes lights up ☐ Does not light up
DTC Inspection	Normal Mode (Pre–check)	☐ Normal ☐ Malfunction code(s) (code) ☐ Freeze frame data ( )
	Check Mode	☐ Normal ☐ Malfunction code(s) (code) ☐ Freeze frame data ( )

DI0RM–19

DIAGNOSTIC TROUBLE CODE CHART

HINT:

Parameters listed in the chart may not be exactly the same as your readings due to the type of instrument or other factors.

If a malfunction code is displayed during the DTC check in the check mode, check the circuit listed in the table below. For details of each code, refer to the ''See page'' under the respective ''DTC No.'' in the DTC chart.

DTC No. (See page)	Detection Item	Trouble Area	MIL *1	Memory
P0031 *5 (DI–243)	Oxygen (A/F) Sensor Heater Circuit Low (Bank 1 Sensor 1)	• Open in heater circuit of A/F sensor • A/F sensor heater • EFI main relay • ECM	○	○
P0032 *5 (DI–243)	Oxygen (A/F) Sensor Heater Circuit High (Bank 1 Sensor 1)	• Short in heater circuit of A/F sensor • A/F sensor heater • EFI main relay • ECM	○	○
P0037 (DI–246)	Oxygen Sensor Heater Control Circuit Low (Bank 1 Sensor 2)	• Open in heater circuit of heated oxygen sensor • Heated oxygen sensor heater • EFI main relay • ECM	○	○
P0038 (DI–246)	Oxygen Sensor Heater Control Circuit High (Bank 1 Sensor 2)	• Short in heater circuit of heated oxygen sensor • Heated oxygen sensor heater • EFI main relay • ECM	○	○
P0100 (DI–249)	Mass or Volume Air Flow Circuit	• Open or short in mass air flow meter circuit • Mass air flow meter • ECM	○	○
P0101 (DI–253)	Mass or Volume Air Flow Circuit Range/Performance Problem	• Mass air flow meter	○	○
P0102 (DI–249)	Mass or Volume Air Flow Circuit Low Input	• Open or short in mass air flow meter circuit • Mass air flow meter • ECM	○	○
P0103 (DI–249)	Mass or Volume Air Flow Circuit High Input	• Short in mass air How meter circuit (+B circuit) • Mass air flow meter • ECM	○	○
P0110 (DI–254)	Intake Air Temperature Circuit	• Open or short in intake air temp. sensor circuit • Intake air temp. sensor (built in mass air flow meter) • ECM	○	○
P0112 (DI–254)	Intake Air Temperature Circuit Low Input	• Short in intake air temp. sensor circuit • Intake air temp. sensor (built in mass air flow meter) • ECM	○	○
P0113 (DI–254)	Intake Air Temperature Circuit High Input	• Open in intake air temp. sensor circuit • Intake air temp. sensor (built in mass air flow meter) • ECM	○	○
P0115 (DI–258)	Engine Coolant Temperature Circuit	• Open or short in engine coolant temp. sensor circuit • Engine coolant temp. sensor • ECM	○	○
P0116 (DI–263)	Engine Coolant Temperature Circuit Range/Performance Problem	• Cooling system • Engine coolant temp. sensor	○	○

P0117 (DI–258)	Engine Coolant Temperature Circuit Low Input	• Short in engine coolant temp. sensor circuit • Engine coolant temp. sensor • ECM	○	○
P0118 (DI–258)	Engine Coolant Temperature Circuit High Input	• Open in engine coolant temp. sensor circuit • Engine coolant temp. sensor • ECM	○	○
P0120 *2 (DI–265)	Throttle Pedal Position Sensor/ Switch "A" Circuit	• Open or short in throttle position sensor circuit • Throttle position sensor • Wire harness • ECM	○	○
P0121 *2 (DI–276)	Throttle Pedal Position Sensor/ Switch "A" Circuit Range/Performance Problem	• Throttle position sensor	○	○
P0122 *2 (DI–265)	Throttle/Pedal Position Sensor/ Switch "A" Circuit Low Input	• Same as DTC No. P0120	○	○
P0123 *2 (DI–265)	Throttle/Pedal Position Sensor/ Switch "A" Circuit High Input	• Open in throttle position sensor circuit (E2 circuit) • Short in throttle position sensor circuit (+B circuit) • Throttle position sensor • ECM	○	○
P0120 *3 (DI–272)	Throttle Pedal Position Sensor/ Switch "A" Circuit	• Open or short in throttle position sensor circuit • Throttle position sensor • Wire harness • ECM	○	○
P0121 *3 (DI–276)	Throttle Pedal Position Sensor/ Switch "A" Circuit Range/Performance Problem	• Throttle position sensor	○	○
P0122 *3 (DI–272)	Throttle/Pedal Position Sensor/ Switch "A" Circuit Low Input	• Open in throttle position sensor circuit • Throttle position sensor • ECM	○	○
P0123 *3 (DI–272)	Throttle/Pedal Position Sensor/ Switch "A" Circuit High Input	• Open in throttle position sensor circuit (E2 circuit) • Short in throttle position sensor circuit (+B circuit) • Throttle position sensor • ECM	○	○
P0125 (DI–263)	Insufficient Coolant Temperature for Closed Loop Fuel Control	• Same as DTC No. P0116	○	○
P0128 (DI–277)	Coolant Thermostat (Coolant Temperature Below Thermostat Regulating Temperature)	• Thermostat • Cooling system • Engine coolant temp. sensor • ECM	○	○
P0134 *5 (DI–278)	Oxygen (A/F) Sensor Circuit No Activity Detected (Bank 1 Sensor 1)	• Open or short in A/F sensor (bank 1 sensor 1) circuit • A/F sensor (bank 1 sensor 1) • A/F sensor heater • EFI main relay • A/F sensor heater and relay circuit • Air induction system • Fuel pressure • Injector • Gas leak in exhaust system • PCV hose connection • PCV valve and hose • ECM	○	○
P0136 (DI–288)	Oxygen Sensor Malfunction (Bank 1 Sensor 2)	• Open or short in heated oxygen sensor circuit • Heated oxygen sensor • Heated oxygen sensor heater	○	○

P0171 (DI–292)	System too Lean (Bank 1)	• Air induction system • Injector blockage • Mass air flow meter • Engine coolant temp. sensor • Fuel pressure • Gas leakage in exhaust system • Open or short in A/F sensor (bank 1 sensor 1) circuit • A/F sensor (bank 1 sensor 1) • PCV valve and hose • PCV hose connection • EFI main relay • A/F sensor heater and relay circuit	○	○
P0172 (DI–292)	System too Rich (Bank 1)	• Injector leak or blockage • Mass air flow meter • Engine coolant temp. sensor • Ignition system • Fuel pressure • Gas leakage in exhaust system • Open or short in A/F sensor (bank 1 sensor 1) circuit • A/F sensor (bank 1 sensor 1) • EFI main relay • A/F sensor heater and relay circuit	○	○
P0220 *2 (DI–265)	Throttle/Pedal Position Sensor/ Switch ”B” Circuit	• Open or short in throttle position sensor circuit • Throttle position sensor • Wire harness • ECM	○	○
P0222 *2 (DI–265)	Throttle/Pedal Position Sensor/ Switch ”B” Circuit Low Input	• Open in throttle position sensor circuit • Short in ground circuit • Throttle position sensor • ECM	○	○
P0223 *2 (DI–265)	Throttle/Pedal Position Sensor/ Switch ”B” Circuit High Input	• Short in throttle position sensor circuit (+B circuit) • Throttle position sensor • ECM	○	○
P0300 (DI–301)	Random/Multiple Cylinder Misfire Detected	• Open or short in engine wire • Connector connection • Vacuum hose connection • Ignition system • Injector • Fuel pressure • Mass air flow meter • Engine coolant temp. sensor • Compression pressure • Valve clearance • Valve timing • PCV hose connection • PCV hose • ECM	○	○
P0301 (DI–301)	Cylinder 1 Misfire Detected		○	○
P0302 (DI–301)	Cylinder 2 Misfire Detected			
P0303 (DI–301)	Cylinder 3 Misfire Detected			
P0304 (DI–301)	Cylinder 4 Misfire Detected			
P0305 (DI–301)	Cylinder 5 Misfire Detected		○	○
P0306 (DI–301)	Cylinder 6 Misfire Detected		○	○
P0325 (DI–312)	Knock Sensor 1 Circuit (Bank 1 or Single Sensor)	• Open or short in knock sensor 1 circuit • Knock sensor 1 (looseness) • ECM	○	○
P0330 (DI–312)	Knock Sensor 2 Circuit (Bank 2)	• Open or short in knock sensor 2 circuit • Knock sensor 2 (looseness) • ECM	○	○

P0335 (DI–315)	Crankshaft Position Sensor ”A” Circuit	• Open or short in crankshaft position sensor circuit • Crankshaft position sensor • Crankshaft timing pulley • ECM	○	○
P0339 (DI–315)	Crankshaft Position Sensor ”A” Circuit Intermittent		○	○
P0340 (DI–318)	Camshaft Position Sensor ”A” Circuit (Bank 1 or Single Sensor)	• Open or short in camshaft position sensor circuit • Camshaft position sensor • RH camshaft timing pulley • Jumping teeth of timing belt • ECM	○	○
P0341 (DI–318)	Camshaft Position Sensor ”A” Circuit Range/Performance (Bank 1 or Single Sensor)		○	○
P0351 (DI–320)	Ignition Coil ”A” Primary/Secondary Circuit	• Ignition system • Open or short in IGF and IGT circuit from igniter to ECM • Igniter • Ignition coil • ECM	○	○
P0420 (DI–325)	Catalyst System Efficiency Below Threshold (Bank 1)	• Gas leakage in exhaust system • A/F sensor (bank 1 sensor 1) • Heated oxygen sensor (bank 1 sensor 2) • Three–way catalytic converter	○	○
P0441 (DI–328)	Evaporative Emission Control System Incorrect Purge Flow	• Fuel tank cap incorrectly installed • Fuel tank cap cracked or damaged • Vacuum hose cracks, holed blocked, damaged or disconnected • Open or short in vapor pressure sensor circuit • Vapor pressure sensor • Open or short in VSV circuit for EVAP • VSV for EVAP • Open or short in VSV circuit for CCV • VSV for CCV • Open or short in VSV circuit for pressure switching valve • VSV for pressure switching valve • Fuel tank cracked, holed or damaged • Charcoal canister cracked, holed or damaged • Fuel tank over fill check valve cracked or damaged • ECM	○	○
P0442 (DI–361)	Evaporative Emission Control System Leak detected (small leak)	• Fuel tank cap incorrectly installed • Fuel tank cap cracked or damaged • Hose or tube cracked, hole, damaged or loose seal ((3) or (9) in Fig. 1) • Vacuum hose cracked, holed, blocked, damaged or disconnected • Fuel tank cracked, holed or damaged • Charcoal canister cracked, holed or damaged • Open or short in vapor pressure sensor circuit • VSV for CCV • VSV for EVAP • VSV for pressure switching valve • Vapor pressure sensor • Fuel tank over fill check valve cracked or damaged • ECM	○	○
P0446 (DI–328)	Evaporative Emission Control System Vent Control Circuit	• Same as DTC No. P0441	○	○
P0451 (DI–375)	Evaporative Emission Control System Pressure Sensor/Switch Range/Performance	• Open or short in vapor pressure sensor circuit • Vapor pressure sensor • ECM	○	○

P0452 (DI–375)	Evaporative Emission Control System Pressure Sensor/Switch Low Input	• Open in vapor pressure sensor circuit • Vapor pressure sensor • ECM	○	○
P0453 (DI–375)	Evaporative Emission Control System Pressure Sensor/Switch High Input	• Short in vapor pressure sensor circuit • Vapor pressure sensor • ECM	○	○
P0456 (DI–361)	Evaporative Emission Control System Leak detected (very small leak)	• Same as DTC No. P0442	○	○
P0500 (DI–378)	Vehicle Speed Sensor ”A”	• Combination meter • Open or short in vehicle speed sensor circuit • Vehicle speed sensor • ECM	○	○
P0503 (DI–378)	Vehicle Speed Sensor ”A” Intermittent/Erratic/High		○	○
P0505 *2 (DI–381)	Idle Air Control System	• Air induction system • Electric throttle control system • PCV valve and hose	○	○
P0505 *3 (DI–383)	Idle Air Control System	• PCV hose connection • PCV hose • Open or short in IAC valve circuit • IAC valve is stuck or closed • Open or short in A/C signal circuit • Air induction system • ECM	○	○
P0511 *3 (DI–383)	Idle Air Control Circuit		○	○
P0560 (DI–387)	System Voltage	• Open in back up power source circuit • ECM	○	○
P0604 *2 (DI–389)	Internal Control Module Random Access Memory (RAM) Error	• ECM	○	○
P0606 *2 (DI–389)	ECM/PCM Processor		○	○
P0607 *2 (DI–389)	Control Module Performance		○	○
P0617 (DI–390)	Starter Relay Circuit High	• Short in Park/neutral position (PNP) switch (A/T) or Clutch start switch (M/T) circuit • Park/neutral position (PNP) switch (A/T) • Clutch start switch (M/T) • Ignition switch • ECM	○	○
P0657 *2 (DI–389)	Actuator Supply Voltage Circuit / Open	• ECM	○	○
P0705 *4 (DI–396)	Transmission Range Sensor Circuit Malfunction (PRNDL Input)	• Open in park/neutral position switch circuit • Park/neutral position switch • ECM	○	○
P0724 *4 (DI–397)	Brake Switch ”B” Circuit High	• Short in stop light switch signal circuit • Stop light switch • ECM	○	○
P0850 *4 (DI–396)	Park/Neutral Switch Input Circuit Low	• Same as DTC No. P0705	○	○
P1126 *2 (DI–400)	Magnetic Clutch Circuit	• Open or short in magnetic clutch circuit • Magnetic clutch • ECM	○	○
P2102 *2 (DI–403)	Throttle Actuator Control Motor Circuit Low	• Open in throttle control motor circuit • Throttle control motor • ECM	○	○

P2103 *2 (DI–403)	Throttle Actuator Control Motor Circuit High	• Short in throttle control motor circuit • Throttle control motor • ECM	○	○
P2111 *2 (DI–405)	Throttle Actuator Control System – Stuck Open	• Throttle control motor circuit • Throttle control motor • Throttle body • Throttle valve	○	○
P2112 *2 (DI–405)	Throttle Actuator Control System – Stuck Closed		○	○
P2118 *2 (DI–407)	Actuator Control Motor Current Range/Performance	• Open in ETCS power source circuit • ECM	○	○
P2119 *2 (DI–410)	Throttle Actuator Control Throttle Body Range/Performance	• Electric throttle control system • ECM	○	○
P2120 *2 (DI–412)	Throttle/Pedal Position Sensor/ Switch ”D” Circuit	• Open or short in accelerator pedal position sensor circuit • Accelerator pedal position sensor • ECM	○	○
P2121 *2 (DI–419)	Throttle/Pedal Position Sensor/ Switch ”D” Circuit Range/Performance	• Accelerator pedal position sensor	○	○
P2122 *2 (DI–412)	Throttle/Pedal Position Sensor/ Switch ”D” Circuit Low Input	• Open in accelerator pedal position sensor circuit • Short in ground circuit • Accelerator pedal position sensor • ECM	○	○
P2123 *2 (DI–412)	Throttle/Pedal Position Sensor/ Switch ”D” Circuit High Input	• Short in accelerator pedal position sensor circuit (+B circuit) • Accelerator pedal position sensor • ECM	○	○
P2125 *2 (DI–412)	Throttle/Pedal Position Sensor/ Switch ”E” Circuit	• Open or short in accelerator pedal position sensor circuit • Accelerator pedal position sensor • ECM	○	○
P2127 *2 (DI–412)	Throttle/Pedal Position Sensor/ Switch ”E” Circuit Low Input	• Open in accelerator pedal position sensor circuit • Short in ground circuit • Accelerator pedal position sensor • ECM	○	○
P2128 *2 (DI–412)	Throttle/Pedal Position Sensor/ Switch ”E” Circuit High Input	• Short in accelerator pedal position sensor circuit (+B circuit) • Accelerator pedal position sensor • ECM	○	○
P2135 *2 (DI–265)	Throttle Pedal Position Sensor/ Switch ”A” / ”B” Voltage Correlation	• Open or short in throttle position sensor circuit • Throttle position sensor • Wire harness • ECM	○	○
P2138 *2 (DI–412)	Throttle Pedal Position Sensor/ Switch ”D” / ”E” Voltage Correlation	• Open or short in throttle position sensor circuit • Throttle position sensor • ECM	○	○
P2195 *5 (DI–421)	Oxygen (A/F) Sensor Signal Stuck Lean (Bank 1 Sensor 1)	• Open or short in A/F sensor circuit • A/F sensor • A/F sensor heater • EFI main relay • Air induction system • Fuel pressure • Injector • ECM	○	○
P2196 *5 (DI–421)	Oxygen (A/F) Sensor Signal Stuck Rich (Bank 1 Sensor 1)		○	○
P2237 *5 (DI–430)	Oxygen Sensor Pumping Current Circuit / Open (for A/F sensor) (Bank 1 Sensor 1)	• Open or short in A/F sensor circuit • A/F sensor • A/F sensor heater • EFI main relay	○	○

P2238 *5 (DI–430)	Oxygen Sensor Pumping Current Circuit / Low (for A/F sensor) (Bank 1 Sensor 1)	• Open in A/F sensor circuit • A/F sensor • A/F sensor heater • EFI main relay	○	○
P2239 *5 (DI–430)	Oxygen Sensor Pumping Current Circuit / High (for A/F sensor) (Bank 1 Sensor 1)	• Short in A/F sensor circuit • A/F sensor • A/F sensor heater • EFI main relay	○	○
P2A00 (DI–435)	A/F Sensor Circuit Slow Response (Bank 1 Sensor 1)	• Open or short in A/F sensor circuit • A/F sensor • A/F sensor heater • EFI main relay • Air induction system • Fuel pressure • Injector • ECM	○	○

*1: ○ ... MIL lights up. – ... MIL does not lights up.
*2: w/ Electronic Throttle Control System
*3: w/o Electronic Throttle Control System
*4: A/T only
*5: This DTC is related to A/F sensor, although the detection item is oxygen sensor.

ENGINE (5VZ–FE)

DI0RJ–14

HOW TO PROCEED WITH TROUBLESHOOTING

Troubleshoot in accordance with the procedure on the following page.

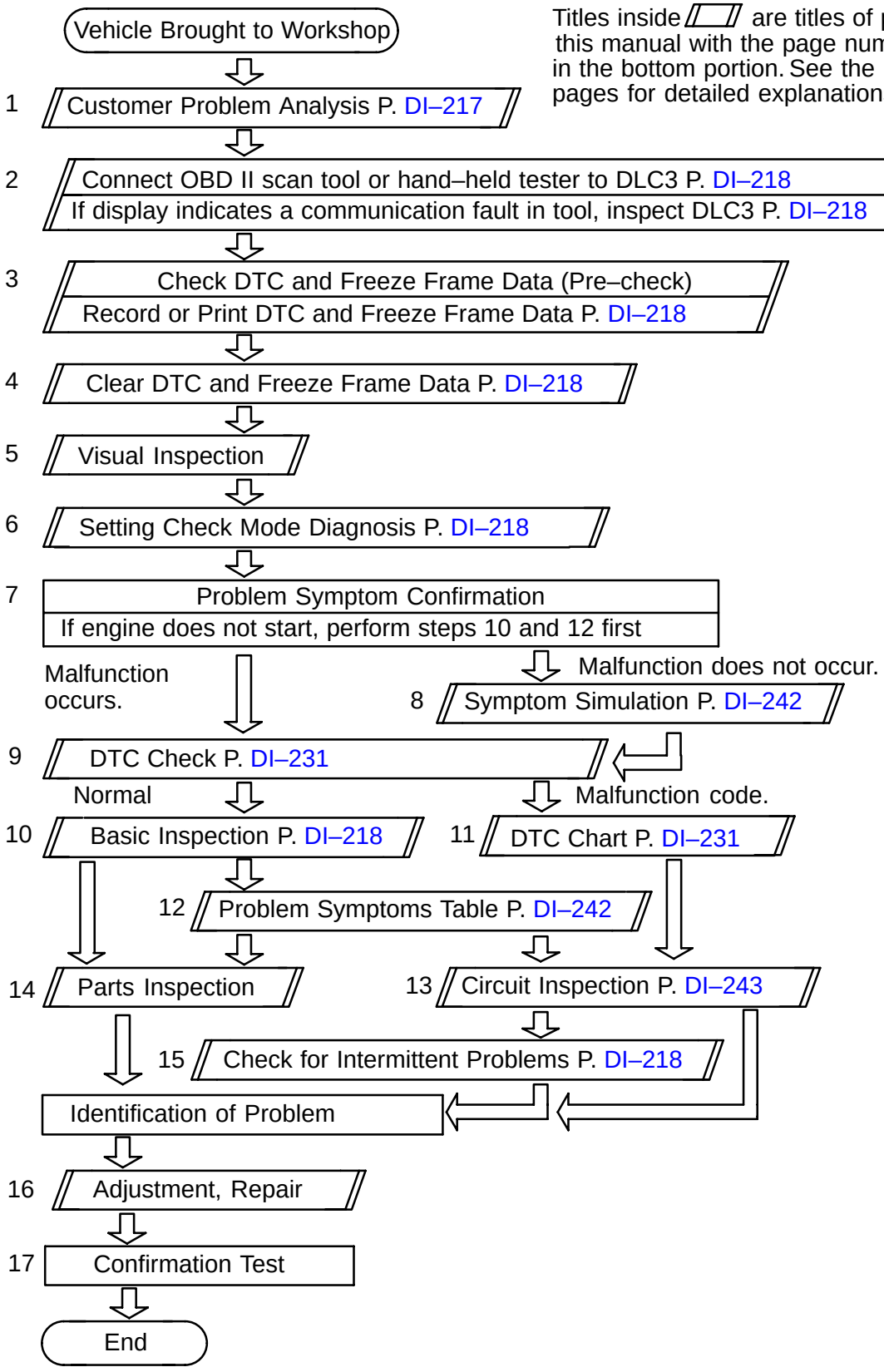

Titles inside ▱ are titles of pages in this manual with the page number indicated in the bottom portion. See the indicated pages for detailed explanations.

DIB1M–01

PARTS LOCATION

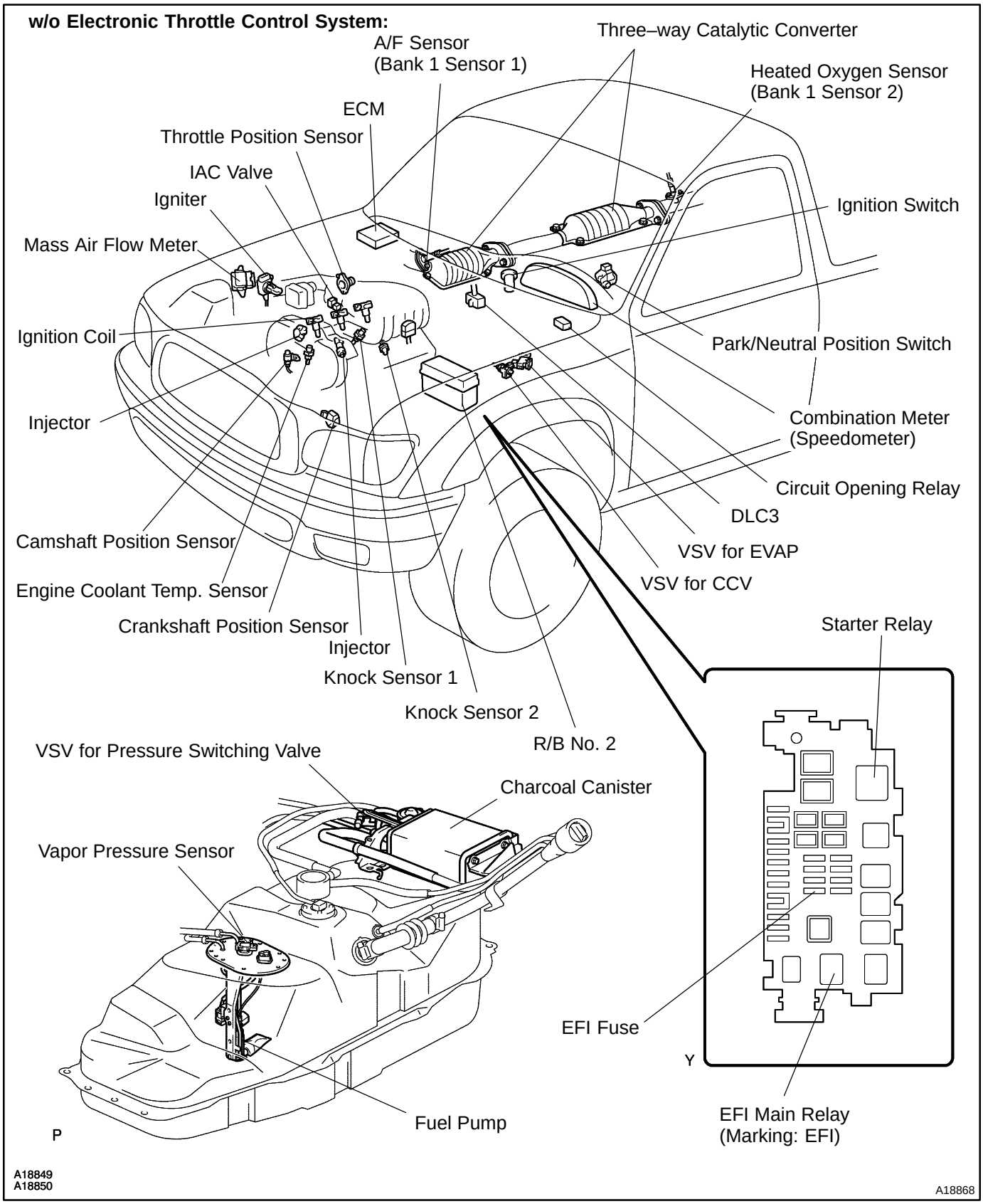

w/ Electronic Throttle Control System:

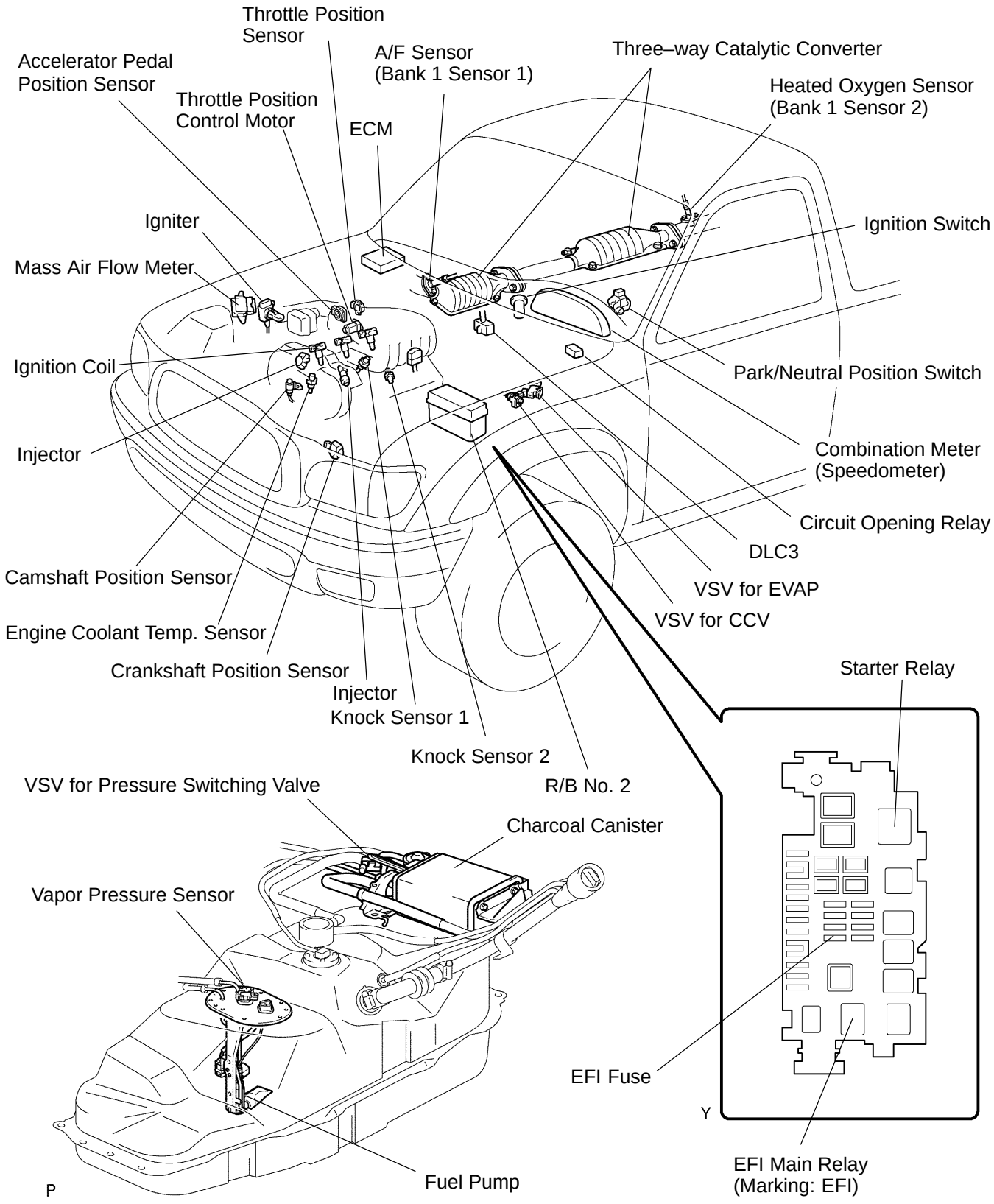

A18849
A18850

A20028

DI0RL–14

PRE–CHECK

1. DIAGNOSIS SYSTEM

(a) Description

- When troubleshooting OBD II vehicles, the only difference from the usual troubleshooting procedure is that you need to connect the hand–held tester or OBD II scan tool complying with SAE J1978 to the vehicle, and read off various data output from the vehicle's ECM.

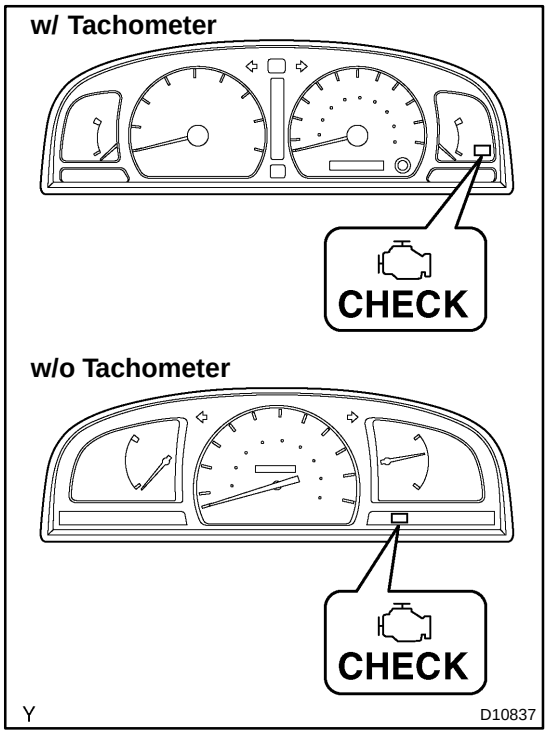

- OBD II regulations require that the vehicle's on–board computer lights up the Malfunction Indicator Light (MIL) on the instrument panel when the computer detects a malfunction in the emission control system/components or in the powertrain control components which affect vehicle emissions, or a malfunction in the computer. In addition to the MIL lighting up when a malfunction is detected, the applicable Diagnostic Trouble Codes (DTCs) prescribed by SAE J2012 are recorded in the ECM memory (See page DI–231).

If the malfunction does not reoccur in the 3 consecutive trips, the MIL goes off automatically but the DTCs remain in the ECM memory.

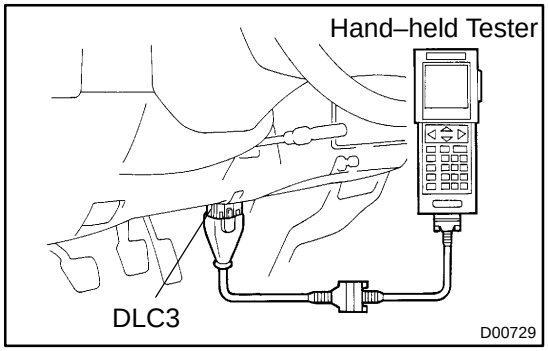

- To check the DTCs, connect the hand–held tester or OBD II scan tool to the Data Link Connector 3 (DLC3) of the vehicle. The OBD II scan tool or hand–held tester also enables you to erase the DTCs and check the freeze frame data and various forms of engine data. (for operating instructions, see the OBD II scan tool's instruction book.)
  The DTCs include SAE controlled codes and manufacturer controlled codes. SAE controlled codes must be set as prescribed by the SAE, while manufacturer controlled codes can be set freely by a manufacturer within the prescribed limits (See the DTC chart on page DI–231).

- The diagnosis system operates in the normal mode during normal vehicle use. It also has a check mode for technicians to simulate malfunction symptoms and troubleshoot. Most DTCs use 2 trip detection logic* to prevent erroneous detections, and ensure a through malfunction detection. By switching the ECM to check mode when troubleshooting, a technician can cause the MIL to light up for a malfunction that is only detected once or momentarily (hand–held tester only) (See step 3).
- *2 trip detection logic:
  When a malfunction is first detected, the malfunction is temporarily stored in the ECM memory (1st trip).If the same malfunction is detected again during the second drive test, this second detection causes the MIL to light up (2nd trip). (however, the ignition switch must be turned OFF between the 1st trip and 2nd trip.)
- Freeze frame data:
  The freeze frame data records the engine conditions (fuel system, calculated load, engine coolant temperature, fuel trim, engine speed, vehicle speed, etc.) when the malfunction is detected. When troubleshooting, it is useful for determining whether the vehicle was running or stopped, the engine was warmed up or not, the air–fuel ratio was lean or rich, etc. at the time of the malfunction.

Priorities of troubleshooting:
If troubleshooting priorities for multiple DTCs are given in the applicable DTC chart, these should be followed.
If no instructions are given, troubleshoot DTCs according to the following priorities.

(1) DTCs other than fuel trim malfunction (DTCs P0171 and P0172) and misfire (DTCs P0300 – P0306).
(2) Fuel trim malfunction (DTCs P0171 and P0172).
(3) Misfire (DTCs P0300 – P0306).

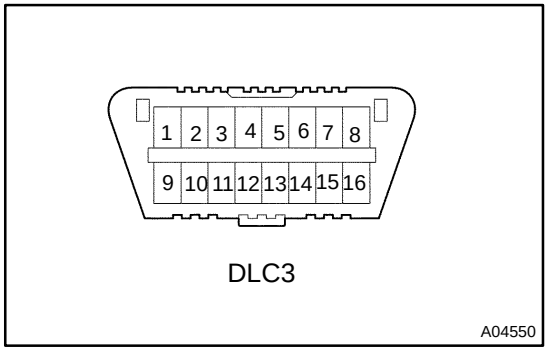

(b) Check the DLC3.
The vehicle's ECM uses the ISO 9141–2 communication protocol. The terminal arrangement of the DLC3 complies with SAE J1962 and matches the ISO 9141–2 format.

Terminal No.	Connection/Voltage or Resistance	Condition
7	Bus (+) Line/Pulse generation	During transmission
4	Chassis Ground – Body Ground/1 Ω or less	Always
5	Signal Ground – Body Ground/1 Ω or less	Always
16	Battery Positive – Body Ground/9 – 14 V	Always

HINT:
If the display shows UNABLE TO CONNECT TO VEHICLE when you have connected the cable of the OBD II scan tool or hand–held tester to the DLC3, turned the ignition switch ON and operated the scan tool, there is a problem on the vehicle side or tool side.

- If the communication is normal when the tool is connected to another vehicle, inspect the DLC3 of the original vehicle.
- If the communication is still impossible when the tool is connected to another vehicle, the problem is probably in the tool itself, so consult the Service Department listed in the tool's instruction manual.

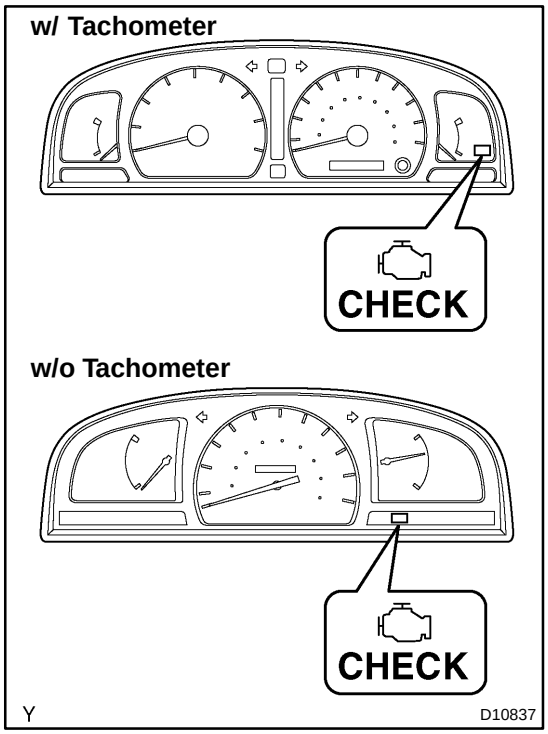

2. Normal Mode:
INSPECT DIAGNOSIS

(a) Check the MIL.
(1) The MIL comes on when the ignition switch is turned ON and the engine is not running.

HINT:
If the MIL does not light up, troubleshoot the combination meter (See page BE–39).

(2) When the engine started, the MIL should go off. If the lamp remains on, the diagnosis system has detected a malfunction or abnormality in the system.

(b) Check the DTC.

NOTICE:

- **If there is no DTC in the normal mode, check the 1st trip DTC using the Continuous Test Results function (Mode 7 for SAE J1979) on the hand–held tester or OBD II scan tool.**
- **Hand–held tester only:**
  When the diagnosis system is switched from the normal mode to the check mode all the DTCs and freeze frame data recorded in normal mode will be erased. So before switching modes, always check the DTCs and freeze frame data, and note them down.

(1) Prepare the hand–held tester or OBD II scan tool (complying with SAE J1978).
(2) Connect the hand–held tester or OBD II scan tool to the DLC3 at the lower left of the instrument panel.
(3) Turn the ignition switch ON and push the hand–held tester or OBD II scan tool main switch ON.

(4) Use the hand–held tester or OBD II scan tool to check the DTCs and freeze frame data and note them down (For operating instructions, see the OBD II scan tool's instruction book.).

If there is no DTC in normal mode, check the 1st trip DTC using Continuous Test Results function (Mode 7 for SAE J1979) on the hand–held tester or OBD II scan tool.

(5) See page DI–231 to confirm the details of the DTCs.

NOTICE:

- **When simulating a symptom with the OBD II scan tool (excluding hand–held tester) to check the DTCs, use the normal mode. For code on the DTC chart subject to "2 trip detection logic", perform either of the following actions.**
- **Turn the ignition switch OFF after the symptom is simulated once. Then repeat the simulation process again. When the problem has been simulated twice, the MIL lights up and the DTCs are recorded in the ECM.**
- **Check the 1st trip DTC using Mode 7 (Continuous Test Results) for SAE J1979.**

(c) Clear the DTC.

The DTCs and freeze frame data will be erased by either action.

- Operating the hand–held tester or OBD II scan tool (complying with SAE J1978) to erase the codes (See the OBD II scan tool's instruction book for operating instructions.).
- Disconnecting the battery terminals or remove the EFI fuse more than 60 seconds.

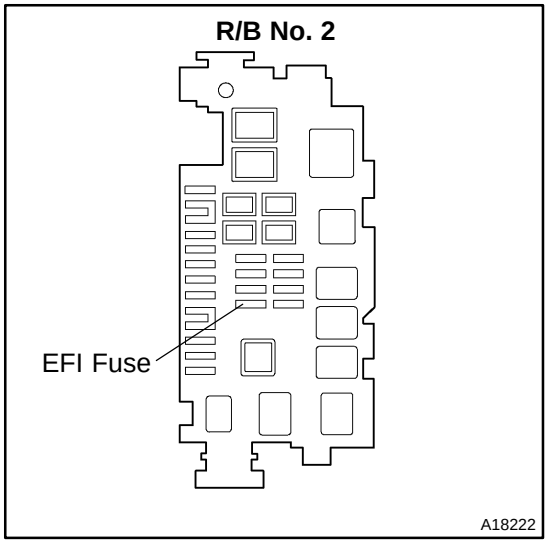

NOTICE:

If the hand–held tester switches the ECM from the normal mode to the check mode or vice–versa, or if the ignition switch is turned from ON to ACC or OFF during check mode, the DTCs and freeze frame data will be erased.

3. Check Mode:

INSPECT DIAGNOSIS

HINT:

Hand–held tester only:

Compared to the normal mode, the check mode has further sensitivity to detect malfunctions.

Furthermore, the same diagnostic items which are detected in the normal mode can also be detected in the check mode.

(a) Check the DTC.

(1) Initial conditions

- Battery positive voltage 11 V or more
- Throttle valve fully closed
- Transmission in P or N position

- A/C switched OFF

(2) Turn the ignition switch OFF.
(3) Prepare the hand–held tester.
(4) Connect the hand–held tester to the DLC3 at the lower left of the instrument panel.
(5) Turn the ignition switch ON and push the hand–held tester main switch ON.

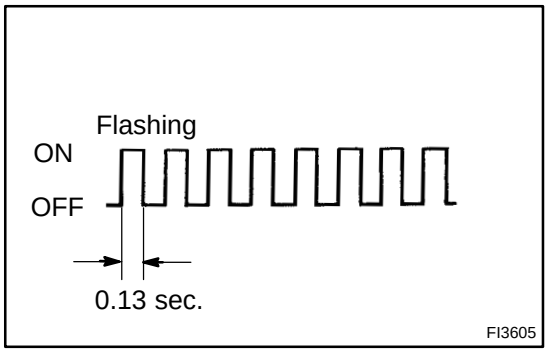

(6) Switch the hand–held tester from the normal mode to the check mode (check that the MIL flashes).

NOTICE:

If the hand–held tester switches the ECM from the normal mode to the check mode or vice–versa, or if the ignition switch is turned from ON to ACC or OFF during the check mode, the DTCs and freeze frame data will be erased.

(7) Start the engine (the MIL goes off after the engine started).
(8) Simulate the conditions of the malfunction described by the customer.

NOTICE:

Leave the ignition switch ON until you have checked the DTCs, etc.

(9) After simulating the malfunction conditions, use the hand–held tester diagnosis selector to check the DTCs and freeze frame data, etc.

HINT:

Be careful not to turn the ignition switch OFF. Turning the ignition switch OFF switches the diagnosis system from the check mode to the normal mode. so all the DTCs, etc. are erased.

(10) After checking the DTC, inspect the applicable circuit.

4. FAIL–SAFE CHART

If any of the following codes are recorded, the ECM enters into the ail–safe mode.

DTC No.	Fail–Safe Operation	Fail–Safe Deactivation Conditions
P0100 P0102 P0103	Ignition timing is calcurated from engine speed and throttle opening angle.	Returned to normal condition
P0110 P0112 P0113	Intake air temp. is fixed at 20˚C (68˚F).	Returned to normal condition
P0115 P0117 P0118	Engine coolant temp. is fixed at 80˚C (176˚F).	Returned to normal condition
P0120 *1 P0122 *1 P0123 *1 P0220 *1 P0222 *1 P0223 *1	VTA is fixed at 0 %.	Following condition must be repeated at least 2 times consecutively (a) VTA ≧ 0.1 V and ≦ 0.95 V, vehicle speed= 0 km/h (only ECT) (b) Vehicle speed: 0 km/h (0 mph) (only for A/T)
P0120 *2 P0122 *2 P0123 *2	VTA is fixed at 0 %.	The following condition must be repeated at least 2 times consecutively VTA ≧ 0.1 V and ≦ 0.95 V
P0031 P0032 P0037 P0038	The heater circuit in which an abnormality is detected is turned off.	Ignition switch OFF
P0325 P0327 P0328 P0330 P0332 P0333	Max. timing retardation	Ignition switch OFF
P0325 P0330	Max. timing retardation	Ignition switch OFF
P0340	Fuel cut	Returned to normal condition
P0351	Fuel cut	Returned to normal condition

*1: w/ Electronic Throttle Control System

*2: w/o Electronic Throttle Control System

5. CHECK FOR INTERMITTENT PROBLEMS

HINT:

Hand–held tester only:

By putting the vehicle's ECM in check mode, 1 trip detection logic is possible instead of 2 trip detection logic and sensitivity to detect open circuits is increased. This makes it easier to detect intermittent problems.

(a) Clear the DTCs (See step 2).

(b) Set the check mode (See step 3).

(c) Perform a simulation test (See page IN–18).

(d) Check the connector and terminal (See page IN–28).

(e) Handle the connector (See page IN–28).

6. BASIC INSPECTION

When the malfunction code is not confirmed in the DTC check, troubleshooting should be performed in all the possible circuits considered as the cause of the problems. In many cases, by carrying out the basic engine check shown in the following flow chart, the location causing the problem can be found quickly and efficiently. Therefore, use this check is essential in the engine troubleshooting.

1	**Is battery positive voltage 11 V or more when engine is stopped?**

NO → **Charge or replace battery.**

YES

2	**Is engine cranked?**

NO → **Proceed to pages ST–16, ST–18, and continue to troubleshoot.**

YES

3	**Does engine start?**

NO → **Go to step 7.**

YES

4	**Check air filter.**

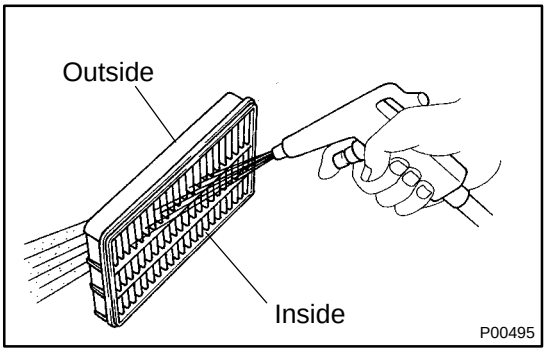

PREPARATION:
Remove the air filter.
CHECK:
Visually check that the air filter is not dirty or excessive oily.
HINT:
If necessary, clean the air filter with compressed air. First blow from the inside thoroughly, then blow from the outside of the air filter.

NG → **Repair or replace.**

OK

5	**Check idle speed.**

PREPARATION:

(a) Warm up the engine to the normal operating temperature.
(b) Switch off all the accessories.
(c) Switch off the A/C.
(d) Shift the transmission into the N position.
(e) Connect the hand–held tester or OBD II scan tool to the DLC3 of the vehicle.

CHECK:

Use the ”DIAGNOSIS/ENHANCED OBD II/DATA LIST/ALL” to check the idle speed.

OK:

Idle speed: 650 – 750 rpm

NG → **Proceed to problem symptoms table on page DI–242.**

OK

6	**Check ignition timing (See page EM–9).**

NG → **Proceed to page IG–1, and continue to troubleshoot.**

OK

Proceed to problem symptoms table on page DI–242.

7	**Check fuel pressure.**

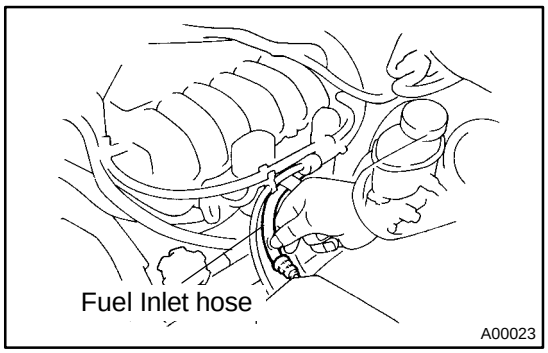

PREPARATION:

(a) Be sure that enough fuel is in the tank.
(b) Connect the hand–held tester to the DLC3.
(c) Turn the ignition switch ON and push the hand–held tester main switch ON.
(d) Use the ACTIVE TEST mode to operate the fuel pump.
(e) Please refer to the hand–held tester operator’s manual for further details.
(f) Without hand–held tester, connect the positive (+) and negative (–) leads from the battery to the fuel pump connector (See page SF–5).

CHECK:

Check for the fuel pressure in the fuel inlet hose when it is pinched by hand.

HINT:

At this time, you will hear the fuel flowing noise.

NG	**Proceed to page SF–5, and continue to troubleshoot.**

OK

8	**Check for spark.**

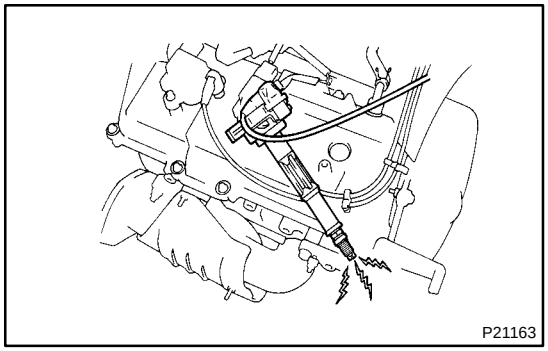
P21163

PREPARATION:

(a) Remove the ignition coil or disconnect the high–tension cord from the spark plug.
(b) Remove the spark plug.
(c) Connect the ignition coil or high–tension cord to the spark plug again, and connect the ignition coil connector.
(d) Disconnect the injector connector.
(e) Ground the spark plug.

CHECK:

Check if spark occurs while the engine is being cranked.

NOTICE:

To prevent excess fuel from being injected from the injectors during this test, don't crank the engine for more than 5 – 10 seconds at a time.

NG	**Proceed to page IG–1, and continue to troubleshoot.**

OK

Proceed to problem symptoms table on page DI–242.

7. DATA LIST

HINT:

According to the DATA LIST displayed by the OBD II scan tool or hand–held tester, you can read the value of the switch, sensor, actuator and so on without parts removal. Reading the DATA LIST as a first step of troubleshooting is one of the method to shorten the labor time.

NOTICE:

The values given below for "Normal Condition" are representative values. So, a vehicle may still be normal even if its value differs from those listed here. So, do not depend solely on the "Normal Condition" here when deciding whether a part is faulty or not.

(a) Warm up the engine.
(b) Turn the ignition switch OFF.
(c) Connect the OBD II scan tool or the Hand–held tester to the DLC3.
(d) Turn the ignition switch ON.
(e) According to the display on tester, read the "DATA LIST".

Hand–held tester display	Measurement Item/Range (Display)	Normal Condition *	Diagnostic Note
INJECTOR	Injection period of the No. 1 cylinder/Min.: 0 ms, Max.: 32.64 ms	Idling: 1.82 – 3.15 ms	
IGN ADVANCE	Ignition advance of ignition timing of No. 1 cylinder/Min.: –64 deg., Max.: 63.5 deg.	Idling: BTDC 12.5 – 22.0˚	
IAC DUTY RATIO (w/o ETCS)	Duty ratio of the ISC valve/ Min.: 0 %, Max.: 99 %	Idling: 22 – 46 %	
CALC LOAD	Calculator load by ECM/ Min.: 0 %, Max.: 100 %	Idling: 14.9 – 21.3 % Racing without load (2,500rpm): 16.6 – 23.5 %	
MAF	Air flow rate from MAF sensor/ Min.: 0 gm/s, Max.: 655 gm/s	Idling: 3.3 – 4.7 gm/sec. Racing without load (2,500 rpm): 12.9 – 18.3 gm/sec.	
ENGINE SPD	Engine speed/ Min.: 0 rpm, Max.: 16383 rpm	Idling: 650 – 750 rpm	
COOLANT TEMP	Coolant temperature/ Min.: –40 °C, Max.: 140 °C	After warming up: 80 – 95˚C (176 – 203˚F)	If the value is "–40˚C" or "140˚C", sensor circuit is open or shorted.
INTAKE AIR	Intake air temperature/ Min.: –40 °C, Max.: 140 °C	Equivalent to ambient temp.	
THROTTLE POS	Absolute throttle position sensor/ Min.: 0 %, Max.: 100 %	Throttle valve fully closed: 8 – 20 % Throttle valve fully open: 65 – 75 %	
CTP SW	Closed throttle position switch/ ON or OFF	Trottle fully closed: ON Trottle open: OFF	
VEHICLE SPD	Vehicle Speed/ Min.: 0 km/h, Max.: 255 km/h	Vehicle stopped: 0 km/h (0 mph)	
O2S B1 S2	Oxygen sensor output voltage of the bank 1 sensor 2/ Min.: 0 V, Max.: 1.275 V	Driving 50 km/h (31 mph): 0.1 – 0.9 V	
AFS B1 S1	A/F sensor output voltage of the bank 1 sensor 1/ Min.: 0 V, Max.: 7.999 V	Idling: 2.8 – 3.8 V	
VAPOR PRESS	Vapor Pressure/ Min.: –4.125 kPa, Max.: 2.125 kPa	VSV operating: ON	

SHORT FT #1	Short term fuel trim of bank 1/ Min.: –100 %, Max.: 100%	0 ± 20 %	
LONG FT #1	Long term fuel trim of bank 1/ Min.: –100 %, Max.: 100 %	0 ± 20 %	
TOTAL FT #1	Total fuel trim of bank 1/ Min.: 0.5, Max.: 1.496	Idling: 0.5 – 1.4	
O2FT B1 S2	Short term fuel trim associated with the bank 1, sensor 2/Min.: –100 %, Max.: 100%		
AF FT B1 S1	Short term fuel trim associated with the bank 1, sensor 1/Min.: –100 %, Max.: 100%		
FUEL SYS #1	Fuel system status (Bank1) / OL or CL or OLDRIVE or OLFAULT or CLFAULT	Idling after warming up: CL	• OL: Open Loop–has not yet satisfied conditions to go closed loop. • CL: Closed Loop–using oxygen sensor(s) as feed back for fuel control. • OL DRIVE: Open loop due to driving conditions. (power enrichment, deceleration eneanment) OL FAULT: Open loop due to detected system fault. • CL FAULT: Closed loop, but fault with at least one oxygen sensor may be using single oxygen sensor for fuel control.
FC IDL	Idle fuel cut / ON or OFF	Fuel cut operation: ON	
MIL	MIL status / ON or OFF	MIL ON: ON	
STARTER SIG	Starter signal / ON or OFF	Cranking: ON	
A/C SIG	A/C signal / ON or OFF	A/C ON: ON	
PNP SW [NSW] (A/T)	Neutral position switch signal / ON or OFF	P or N position: ON	
STOP LIGHT SW	Stop light switch / ON or OFF	Brake pedal depressed: ON Brake pedal released: OFF	
PS OIL PRESS SW	Power steering signal / ON or OFF	Steering position is; center: OFF Except center:ON	
PS SIGNAL	Power steering signal/ ON or OFF	After engine start: OFF After steer the steering: ON	
A/C CUT SIG	A/C cut signal/ ON or OFF	A/C S/W OFF: ON	
FUEL PUMP / SPD	Fuel pump / speed status / ON/H or OFF/M, L	Idling: ON	
EVAP VSV	VSV status for EVAP control / ON or OFF	VSV operating: ON	
IGNITION	Ignition counter/ Min.: 0, Max.: 600	0 – 600	

CYL #1, CYL #2, CYL #3, CYL #4, CYL #5, CYL #6	Misfire ratio of the cylinder 1 – 6/ Min.: 0 %, Max.: 50%	0 %	
FC TAU	Fuel Cut TAU: Fuel cut during very light load/ ON or OFF	Fuel cut operating: ON	
THROTTLE POS #2 (W/ ECTS)	Throttle position sensor No.2 output voltage/ Min.: 0 V, Max.: 5 V	• Throttle fully closed: 2.0 – 2.9 V • Throttle fully open: 4.7 – 5.1 V	Read the value when ignition switch ON (Do not start engine).
ACCEL POS #1 (W/ ECTS)	Accelerator pedal position sensor No.1 output voltage/ Min.: 0 V, Max.: 5 V	• Accelerator released: 0.3 – 0.9 V • Accelerator depressed: 3.2 – 4.8 V	Read the value when ignition switch ON (Do not start engine).
ACCEL POS #2 (W/ ECTS)	Accelerator pedal position sensor No.2 output voltage/ Min.: 0 V, Max.: 5 V	• Accelerator released: 1.8 – 2.7 V • Accelerator depressed: 4.7 – 5.1 V	Read the value when ignition switch ON (Do not start engine).
THROTTLE TARGT (W/ ECTS)	Target position of throttle valve/ Min.: 0 V, Max.: 5 V	Idling: 0.4 – 1.0 V	Read the value when ignition switch ON (Do not start engine).
THROTTLE OPN DUTY (W/ ECTS)	Throttle motor opening duty ratio/ Min.: 0 %, Max.: 100 %	Throttle fully closed: 0 %	• When accelerator pedal is depressed, duty ratio is increased. • Read the value when ignition switch ON (Do not start engine).
THROTTLE CLS DUTY (W/ ECTS)	Throttle motor closed duty ratio/ Min.: 0 %, Max.: 100 %	Throttle fully closed: 0 – 20 %	• When accelerator pedal is quick released, duty ratio is increased. • Read the value when ignition switch ON (Do not start engine).
THROTTLE MOT (W/ ECTS)	Whether or not throttle motor control is permitted/ ON or OFF	Idling: ON	Read the value when ignition switch ON (Do not start engine).
+BM (W/ ECTS)	Whether or not electric throttle control system power is inputted/ ON or OFF	Idling: ON	

*: If no conditions are specifically stated for ”Idling”, it means the shift lever is at the N or P position, the A/C switch is OFF and all the accessory switches are OFF.

8. ACTIVE TEST

HINT:

Performing the ACTIVE TEST using the OBD II scan tool or Hand–held tester allows the relay, VSV, actuator and so on to operate without parts removal. Performing the ACTIVE TEST as a first step of troubleshooting is one of the method to shorten the labor time.

It is possible to display the DATA LIST during the ACTIVE TEST.

(a) Warm up the engine.
(b) Turn the ignition switch OFF.
(c) Connect the OBD II scan tool or the Hand–held tester to the DLC3.
(d) Turn the ignition switch ON.
(e) According to the display on tester, read the ”ACTIVE TEST”.

Hand–held tester display	Test Detailse	Diagnostic Note
INJ VOL	[Test Details] Control the injection volume Min.: –12.5 %, Max.: 24.8 % [Vehicle Condition] Engine speed: 3000rpm or less.	
A/F CONTROL	[Test Details] Control the injection volume –12.5 ⇔ 25 % (Change the injection volume to –12.5 % or 25 %.) [Vehicle Condition] Engine speed: 3000 rpm or less.	The following procedure of A/F CONTROL enables that to check its output (show its graph indication) of A/F sensor and oxygen sensor. To display the graph indication, select O2S B1 S1 or A/F B1S1 and press button ”4” after selecting ”ACTIVE TEST/A/F CONTROL/USER DATA”.
IAC DUTY RATIO (w/o ETCS)	[Test Details] Control the IAC duty ratio Min.: 0 %, Max.: 90 % [Vehicle Condition] Engine speed: Idling Battery voltage: 8.5 V or more	
A/C CUT SIG	[Test Details] Control the A/C cut signal ON or OFF	
CAN CTRL VSV	[Test Details] Activate the VSV for canister control. ON or OFF	
TANK BYPASS VSV	[Test Details] Activate the VSV for tank bypass. ON or OFF	
EVAP VSV (ALONE)	[Test Details] Activate the VSV for EVAP control. ON or OFF	
FUEL PUMP / SPD	[Test Details] Control the fuel pump. ON or OFF	
TC/TE1	[Test Details] Connect the TC and TE1 ON or OFF	
FC IDL PROHBT	[Test Details] Control the idle fuel cut prohibit ON or OFF	

DI0RP–16

PROBLEM SYMPTOMS TABLE

Symptom	Suspect Area	See page
Engine does not crank (Does not start)	1. Starter 2. Starter relay	ST–16 ST–18
No initial combustion (Does not start)	1. ECM power source circuit 2. Fuel pump control circuit 3. ECM	DI–443 DI–448 IN–28
No complete combustion (Does not start)	1. Fuel pump control circuit	DI–448
Engine cranks normally (Difficult to start)	1. Starter signal circuit 2. Fuel pump control circuit 3. Compression	DI–390 DI–448 EM–3
Cold engine (Difficult to start)	1. Starter signal circuit 2. Fuel pump control circuit	DI–390 DI–448
Hot engine (Difficult to start)	1. Starter signal circuit 2. Fuel pump control circuit	DI–390 DI–448
High engine idle speed (Poor idling)	1. ECM power source circuit	DI–443
Low engine idle speed (Poor idling)	1. Fuel pump control circuit	DI–448
Rough idling (Poor idling)	1. Compression 2. Fuel pump control circuit	EM–3 DI–448
Hunting (Poor idling)	1. ECM power source circuit 2. Fuel pump control circuit	DI–443 DI–448
Hesitation/Poor acceleration (Poor driveability)	1. Fuel pump control circuit 2. A/T faulty	DI–448 DI–476
Surging (Poor driveability)	1. Fuel pump control circuit	DI–448
Soon after starting (Engine stall)	1. Fuel pump control circuit	DI–448
During A/C operation (Engine stall)	1. ECM	IN–28

DIB1N–01

TERMINALS OF ECM

ECM Terminals (w/ ETCS)

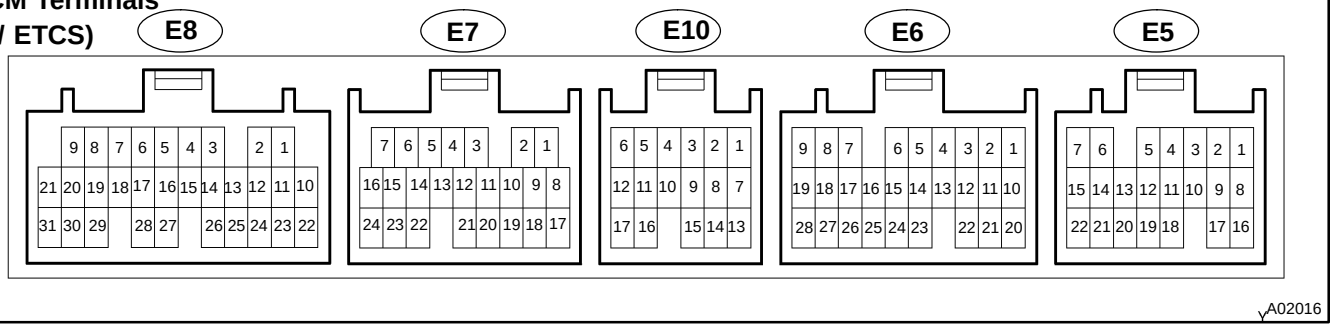

ECM Terminals (w/o ETCS)

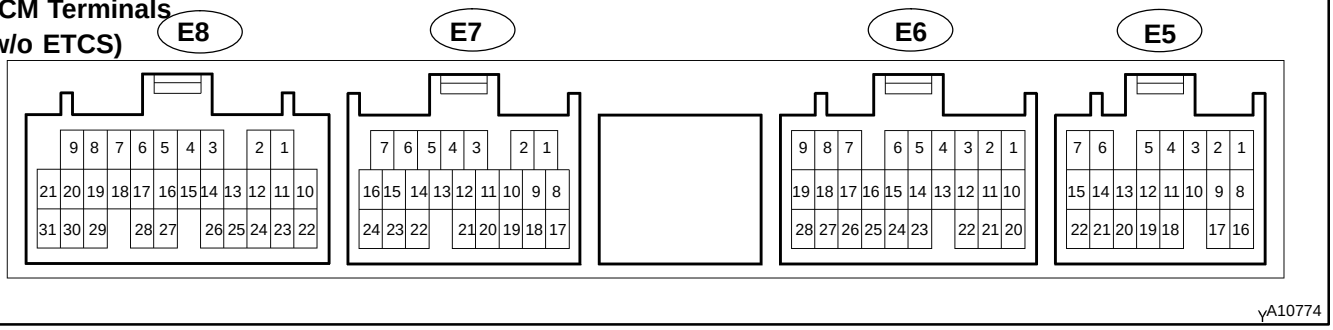

Symbols (Terminal No.)	Wiring Color	Condition	STD Voltage (V)
BATT (E5–16) – E1 (E7–17)	B–Y – BR	Always	9 – 14
+B (E5–1) – E1 (E7–17)	W–R – BR	IG switch ON	9 – 14
VC (E8–25) – E2 (E8–11)	G–Y – L–B	IG switch ON	4.5 – 5.5
VTA (E8–15) – E2 (E8–11)	Y – L–B	IG switch ON Throttle valve fully closed	0.3 – 1.0
		IG switch ON Throttle valve fully open	3.2 – 4.9
*4 VTA2 (E10–4) – E2 (E8–11)	V – L–B	IG switch ON Throttle valve fully closed	0.3 – 1.0
		IG switch ON Throttle valve fully open	2.7 – 5.2
*4 VPA (E10–10) – E2 (E8–11)	GR – L–B	IG switch ON Throttle valve fully closed	0.3 – 0.9
		IG switch ON Throttle valve fully open	3.2 – 4.8
*4 VPA2 (E10–15) – E2 (E8–11)	L – L–B	IG switch ON Throttle valve fully closed	1.8 – 2.7
		IG switch ON Throttle valve fully open	4.7 – 5.1
VG (E8–12) – E2G (E8–10)	G – B–W	Idling A/C switch OFF	1.1 – 1.5
THA (E8–13) – E2 (E8–11)	Y–G – L–B	Idling Intake air temp. 20°C (68°F)	0.5 – 3.4
THW (E8–18) – E2 (E8–11)	G–R – L–B	Idling Engine coolant temp. 80°C (176°F)	0.2 – 1.0
G2 (E7–13) – NE– (E7–21)	R – G	Idling	Pulse generation (See page DI–315)
NE+ (E7–12) – NE– (E7–21)	L – G	Idling	Pulse generation (See page DI–315)
AF1+ (E8–14) – E1 (E7–17)	V – BR	Always (IG switch ON)	3.3 fixed*2
AF1– (E8–26) – E1 (E7–17)	P – BR	Always (IG switch ON)	3.0 fixed*2
OX2B (E8–27) – E1 (E7–17)	R – BR	Maintain engine speed at 2,500 rpm for 3 min. after warming up	Pulse generation (See page DI–288)
HTAF1 (E8–21) – E04 (E8–8)	W – W–B	Idling	Below 3.0
HT2B (E8–29) – E03 (E8–7)	R–W – W–B	IG switch ON	9 – 14

#10 (E7–6) – E01 (E8–4) #20 (E7–5) – E01 (E8–4) #30 (E7–4) – E01 (E8–4) #40 (E7–3) – E01 (E8–4) #50 (E7–1) – E01 (E8–4) #60 (E7–8) – E01 (E8–4)	W–R – W–B B – W–B R – W–B L–R – W–B W–L – W–B L – W–B	IG switch ON		9 – 14
		Idling		Pulse generation (See page DI–301)
KNK1 (E8–23) – E1 (E7–17)	B – BR	Idling		Pulse generation (See page DI–312)
KNK2 (E8–22) – E1 (E7–17)	GR – BR			
PTNK (E8–24) – E2 (E8–11)	R–Y – L–B	IG switch ON	Remove fuel tank cap	3.3
EVP1 (E7–14) – E01 (E8–4)	W–G – W–B	IG switch ON		9 – 14
CCV (E7–19) – E01 (E8–4)	P–L – W–B	IG switch ON		9 – 14
TBP (E7–20) – E01 (E8–4)	G–B – W–B	IG switch ON		9 – 14
SP1 (E5–6) – E1 (E7–17)	G–O – BR	IG switch ON	Rotate driving wheel slowly	Pulse generation
*5 RSC (E7–24) – E01 (E8–4)	B–R – W–B	IG switch ON	Disconnect E7 connector from ECM	9 – 14
*5 RSO (E7–16) – E01 (E8–4)	L–B – W–B			
IGT1 (E7–11) – E1 (E7–17)	B–L – BR	Idling		Pulse generation (See page DI–320)
IGT2 (E7–10) – E1 (E7–17)	LG–R – BR			
IGT3 (E7–9) – E1 (E7–17)	B–W – BR			
IGF (E7–2) – E1 (E7–17)	B–Y – BR	IG switch ON		4.5 – 5.5
		Idling		Pulse generation (See page DI–320)
STP (E5–20) – E1 (E7–17)	G–W – BR	IG switch ON	Brake pedal depressed	7.5 – 14
		IG switch ON	Brake pedal released	Below 1.5
*3 ST1– (E6–9) – E1 (E7–17)	L–W – BR	IG switch ON	Brake pedal is depressed	Below 1.5
		IG switch ON	Brake pedal is released	7.5 – 14
*1 NSW (E6–3) – E1 (E7–17)	Y–GR – BR	IG switch ON	Other shift position in P, N	9 – 14
		IG switch ON	Shift position in P, N	0 – 3.0
STA (E5–7) – E1 (E7–17)	G – BR	Cranking		6.0 or more
IGSW (E5–15) – E1 (E7–17)	B–W – BR	IG switch ON		9 – 14
MREL (E5–4) – E1 (E7–17)	B–O – BR	IG switch ON		9 – 14
FC (E5–22) – E01 (E8–4)	W–L – W–B	IG switch ON		9 – 14
W (E5–2) – E1 (E7–17)	V–R – BR	IG switch ON		Below 3.0
PSW (E7–18) – E1 (E7–17)	B – BR	IG switch ON		9 – 14
ACT (E5–3) – E1 (E7–17)	L–B – BR	A/C switch OFF		Below 2.0
		A/C switch ON	at idling	9 – 14
AC1 (E5–9) – E1 (E7–17)	L–Y – BR	A/C switch ON	at idling	Below 2.0
		A/C switch OFF		9 – 14
SIL (E5–11) – E1 (E7–17)	W – BR	During transmission		Pulse generation
*4 M+ (E8–9) – E1 (E7–17) *4 M– (E8–31) – E1 (E7–17)	R – BR G – BR	Idling		Pulse generation (See page DI–403)
*4 CL+ (E10–2) – CL– (E10–8)	Y – L	Idling		Pulse generation (See page DI–403)

*1: Only for A/T
*2: The ECM terminal voltage is fixed regardless of the output voltage from the sensor.
*3: w/ Cruise Control System
*4: w/ Electronic Throttle Control System
*5: w/o Electronic Throttle Control System

DI190–04

SRS Warning Light Circuit Malfunction (Always lights up, when ignition switch is in LOCK position.)

CIRCUIT DESCRIPTION

The SRS warning light is located on the combination meter.
When the SRS is normal, the SRS warning light lights up for approx. 6 seconds after the ignition switch is turned from the LOCK position to ON position, and then turns off automatically.
If there is a malfunction in the SRS, the SRS warning light lights up to inform the driver of the abnormality and also, the SRS warning light lights up if the airbag ECU is unconnected or the wire harness between the meter ECU and airbag ECU is open. When terminals Tc and CG of the DLC3 are connected, the DTC is displayed by blinking the SRS warning light.

WIRING DIAGRAM

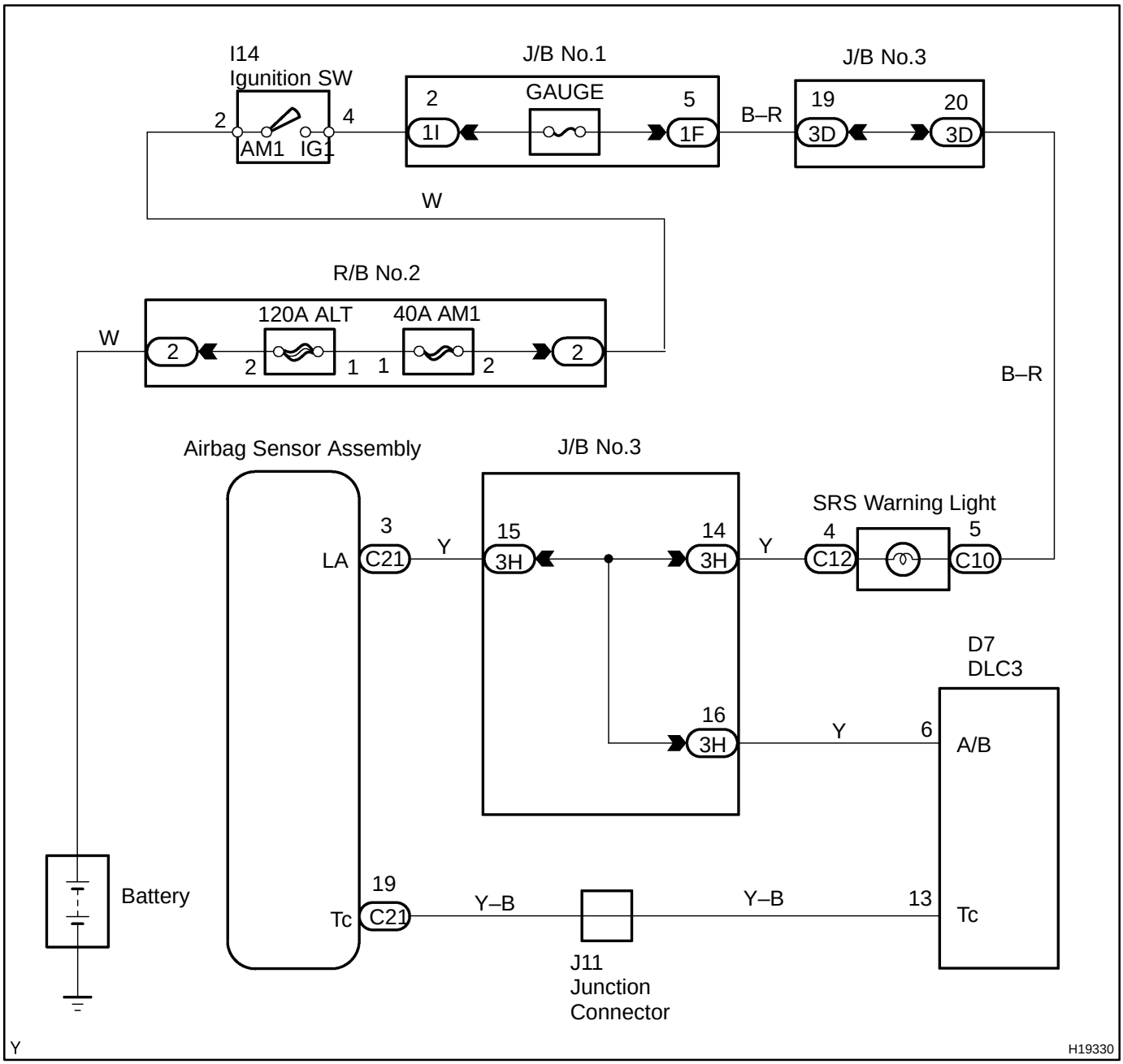

2003 TOYOTA TACOMA (RM1002U)

INSPECTION PROCEDURE

1	**Prepare for inspection. (See step 1 on page DI–675)**

2	**Does SRS warning light turn OFF?**

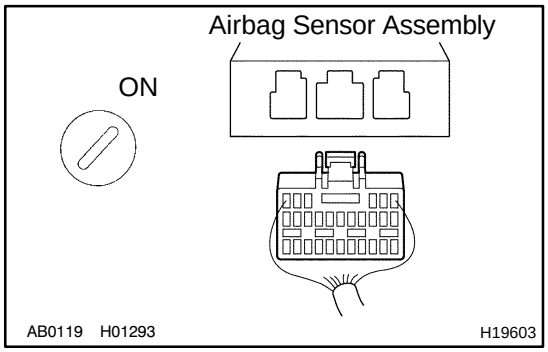

PREPARATION:

(a) Turn ignition switch to LOCK.
(b) Disconnect negative (–) terminal cable from the battery, and wait at least for 90 seconds.
(c) Disconnect the airbag sensor assembly connector.
(d) Connect negative (–) terminal cable to the battery.
(e) Turn ignition switch to on.

CHECK:

Check operation of SRS warning light.

NO → **Replace airbag sensor assembly.**

YES

Check SRS warning light circuit or terminal AB circuit of DLC3.

DI55L–04

DTC	B1156/B1157/15	Front Airbag Sensor (RH) Malfunction

CIRCUIT DESCRIPTION

The front airbag sensor (RH) circuit consists of the airbag sensor assembly and front airbag sensor (RH). For details of the function of each component, see OPERATION on page RS–2.

DTC B1156/B1157/15 is recorded when malfunction is detected in the front airbag sensor (RH) circuit.

DTC No.	DTC Detecting Condition	Trouble Area
B1156/B1157/15	• Front airbag sensor (RH) malfunction	• Front airbag sensor (RH) • Airbag sensor assembly • Wire harness

WIRING DIAGRAM

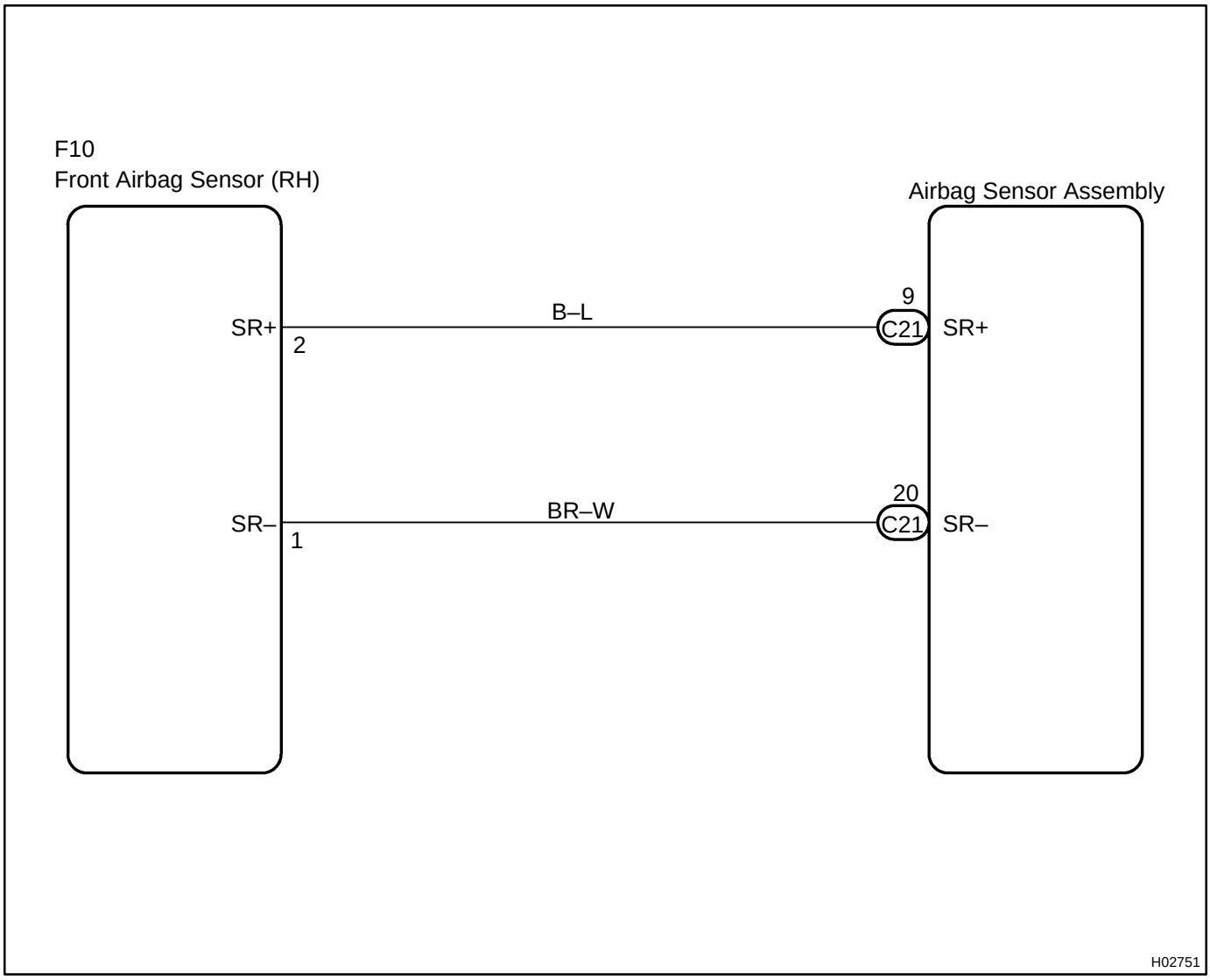

INSPECTION PROCEDURE

1	**Prepare for inspection. (See step 1 on page DI–675)**

2	**Check front airbag sensor (RH) circuit.**

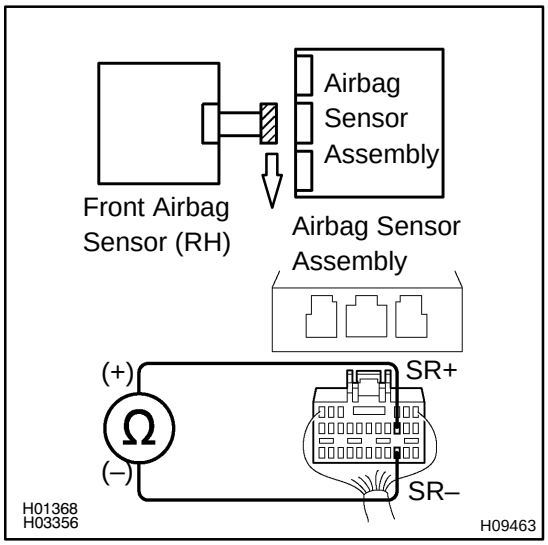

CHECK:

For the connector (on the airbag sensor assembly side) between the front airbag sensor (RH) and the airbag sensor assembly, measure the resistance between SR+ and SR–.

OK:

Resistance: 754 – 886 Ω

NG → **Go to step 6.**

OK

3	Check front airbag sensor (RH) circuit (to ground).

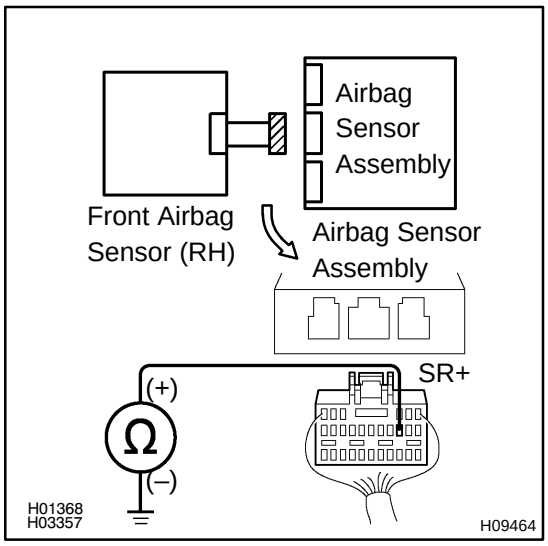

CHECK:

For the connector (on the airbag sensor assembly side) between the front airbag sensor (RH) and the airbag sensor assembly, measure the resistance between SR+ and body ground.

OK:

Resistance: 1 MΩ or Higher

NG → **Go to step 7.**

OK

4	Check front airbag sensor (RH) circuit (to B+).

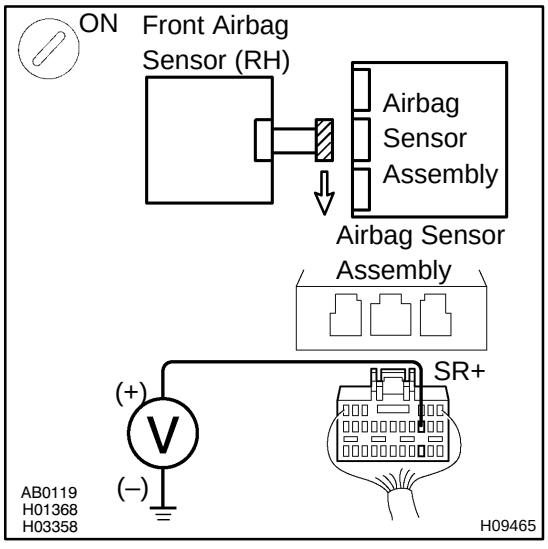

PREPARATION:

Connect negative (–) terminal cable to the battery, and wait at least for 2 seconds.

CHECK:

(a) Turn ignition switch to ON.

(b) For the connector (on the airbag sensor assembly side) between the front airbag sensor (RH) and the airbag sensor assembly, measure the voltage between SR+ and body ground.

OK:

Voltage: Below 1 V

NG → **Go to step 8.**

OK

5	Check airbag sensor assembly.

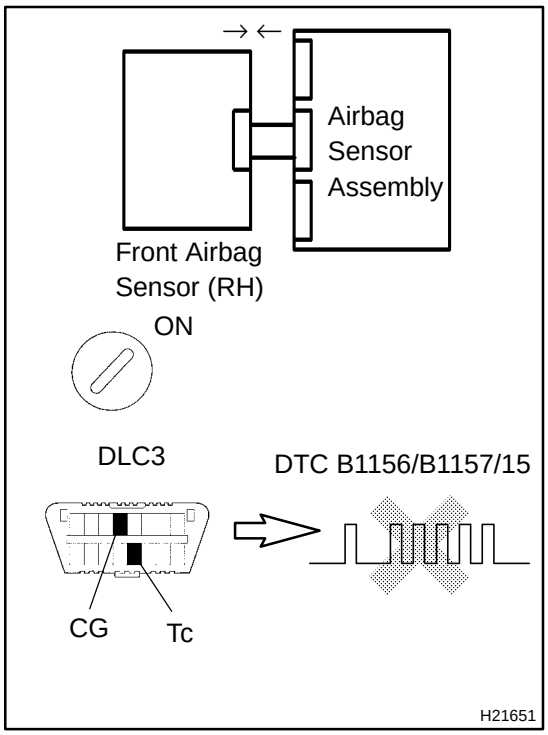

PREPARATION:

(a) Turn ignition switch to LOCK.
(b) Disconnect negative (–) terminal cable from the battery, and wait at least for 90 seconds.
(c) Connect the front airbag sensor (RH) connector and airbag sensor assembly connector.
(d) Connect negative (–) terminal cable to the battery, and wait at least for 2 seconds.

CHECK:

(a) Turn ignition switch to ON, and wait at least for 20 seconds.
(b) Clear DTC stored in memory.
(See page DI–588)
(c) Turn ignition switch to LOCK, and wait at least for 20 seconds.
(d) Turn ignition switch to ON, and wait at least for 20 seconds.
(e) Check DTC.
(See page DI–588)

OK:

DTC B1156/B1157/15 is not output.

HINT:
Codes other than code B1156/B1157/15 may be output at this time, but they are not relevant to this check.

NG	Replace airbag sensor assembly.

OK

From the results of the above inspection, the malfunctioning part can now be considered normal. To make sure of this, use the simulation method to check.

6	Check front airbag sensor (RH).

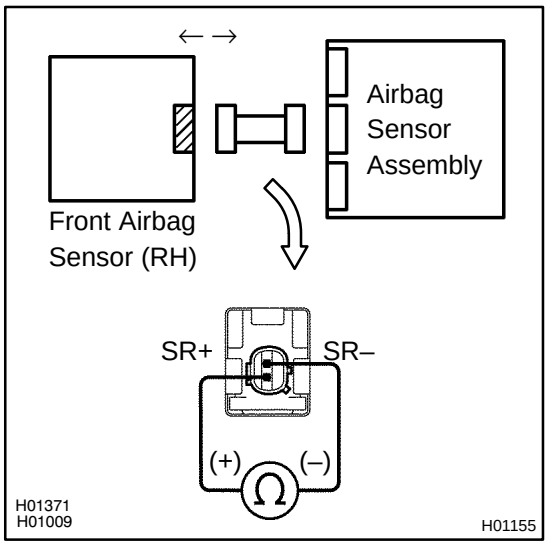

PREPARATION:

Disconnect the front airbag sensor connector (RH).

CHECK:

For the connector (on the front airbag sensor side), measure the resistance between SR+ and SR–.

OK:

Resistance: 754 – 886 Ω

NG → **Replace front airbag sensor (RH).**

OK

Repair or replace harness or connector between the front airbag sensor (RH) and airbag sensor assembly.

7	Check wire harness (to ground).

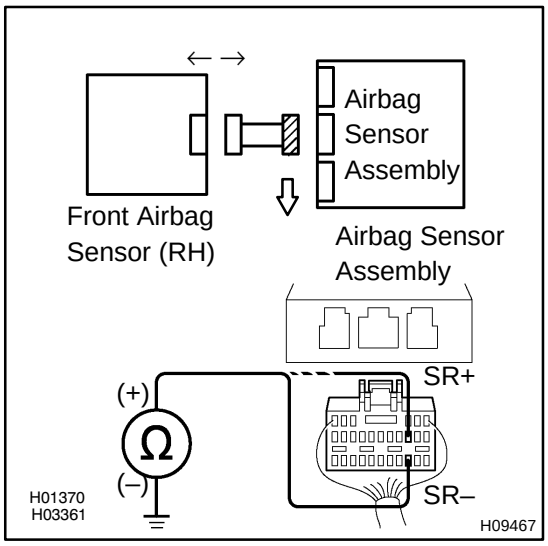

PREPARATION:
Disconnect the front airbag sensor connector (RH).
CHECK:
For the connector (on the airbag sensor assembly side) between the front airbag sensor (RH) and the airbag sensor assembly, measure the resistance between body ground and each of SR+ and SR–.
OK:
Resistance: 1 MΩ or Higher

NG → **Repair or replace harness or connector between the front airbag sensor (RH) and airbag assembly.**

OK

Replace front airbag sensor (RH).

8	Check wire harness (to B+).

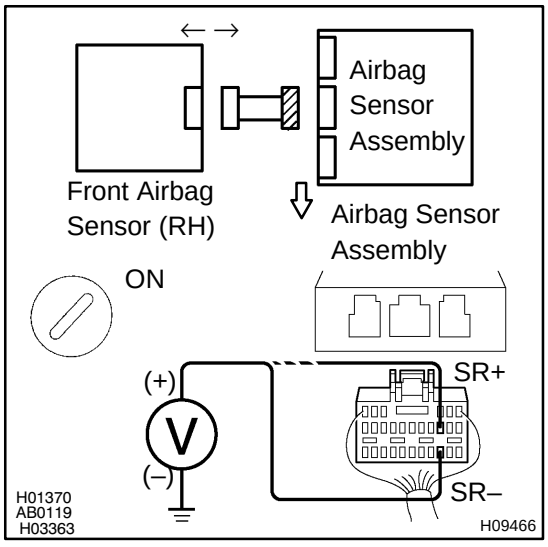

PREPARATION:
Disconnect the front airbag sensor connector (RH).
CHECK:
(a) Turn ignition switch to ON.
(b) For the connector (on the airbag sensor assembly side) between the front airbag sensor (RH) and the airbag sensor assembly, measure the voltage between body ground and each of SR+ and SR–.
OK:
Voltage: Below 1 V

NG → **Repair or replace harness or connector between the front airbag sensor (RH) and airbag assembly.**

OK

Replace front airbag sensor (RH).

DI55M–03

DTC	B1158/B1159/16	Front Airbag Sensor (LH) Malfunction

CIRCUIT DESCRIPTION

The front airbag sensor (LH) circuit consists of the airbag sensor assembly and front airbag sensor (LH). For details of the function of each component, see OPERATION on page RS–2.

DTC B1158/B1159/15 is recorded when malfunction is detected in0 the front airbag sensor (LH) circuit.

DTC No.	DTC Detecting Condition	Trouble Area
B1158/B1159/16	• Front airbag sensor (LH) malfunction	• Front airbag sensor (LH) • Airbag sensor assembly • Wire harness • Cowl wire harness

WIRING DIAGRAM

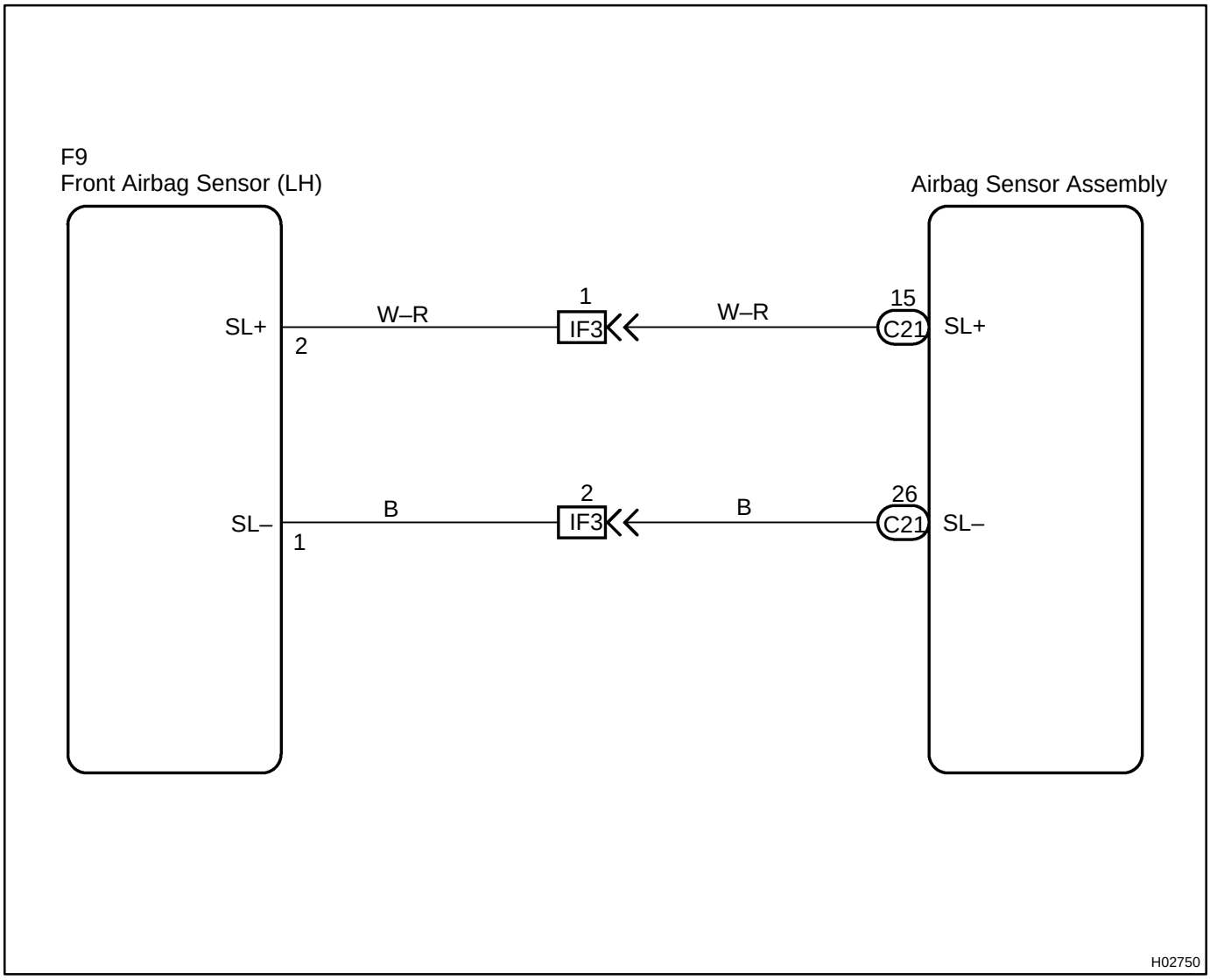

INSPECTION PROCEDURE

1	**Prepare for inspection. (See step 1 on page DI–675)**

2	**Check front airbag sensor (LH) circuit.**

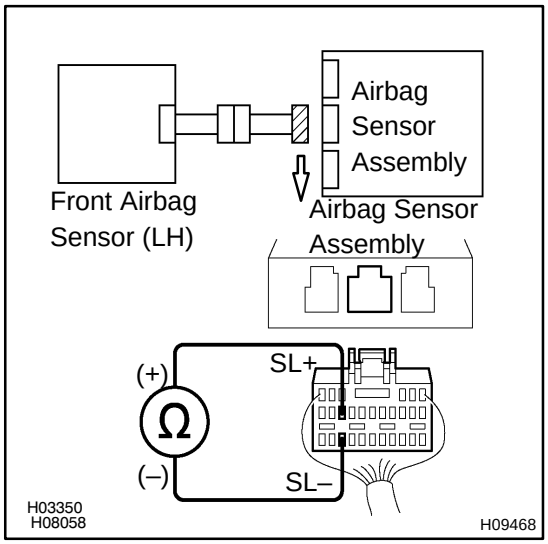

CHECK:

For the connector (on the airbag sensor assembly side) between the front airbag sensor (LH) and the airbag sensor assembly, measure the resistance between SL+ and SL–.

OK:

Resistance: 754 – 886 Ω

NG → **Go to step 6.**

OK

3	Check front airbag sensor (LH) circuit (to ground).

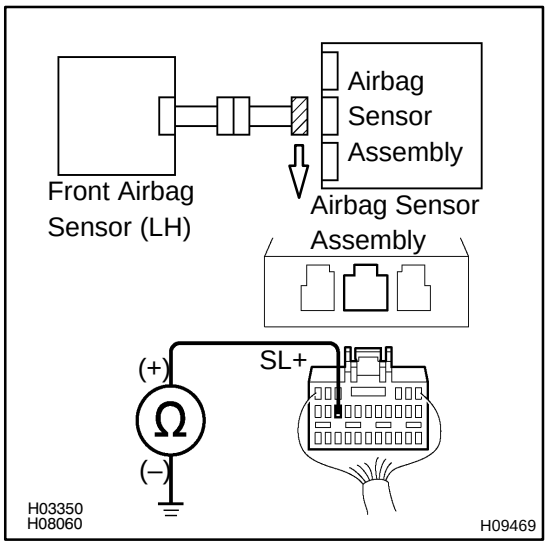

CHECK:

For the connector (on the airbag sensor assembly side) between the front airbag sensor (LH) and the airbag sensor assembly, measure the resistance between SL+ and body ground.

OK:

Resistance: 1 MΩ or Higher

NG → **Go to step 9.**

OK

4	Check front airbag sensor (LH) circuit (to B+).

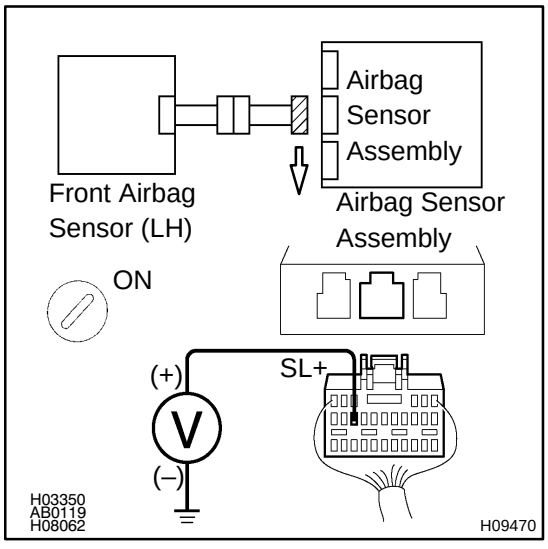

PREPARATION:

Connect negative (–) terminal cable to the battery, and wait at least for 2 seconds.

CHECK:

(a) Turn ignition switch to ON.

(b) For the connector (on the airbag sensor assembly side) between the front airbag sensor (LH) and the airbag sensor assembly, measure the voltage between SL+ and body ground.

OK:

Voltage: Below 1 V

NG → **Go to step 7.**

OK

5	Check airbag sensor assembly.

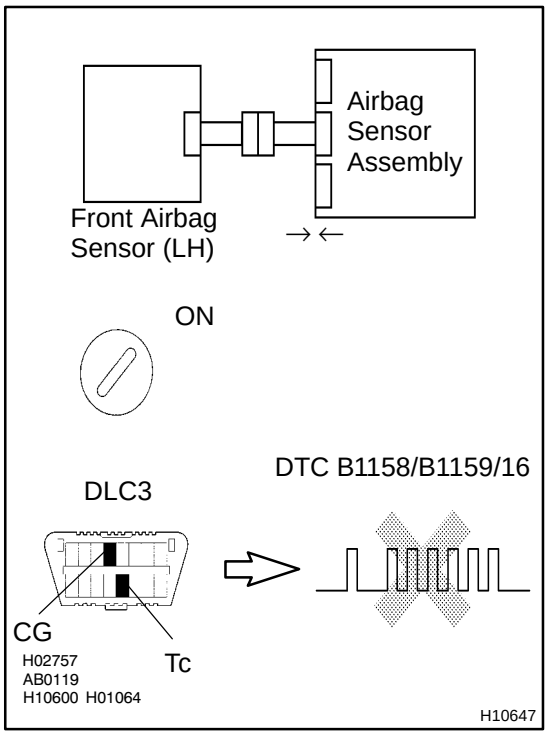

PREPARATION:

(a) Turn ignition switch to LOCK.
(b) Disconnect negative (–) terminal cable from the battery, and wait at least for 90 seconds.
(c) Connect the front airbag sensor (LH) connector and airbag sensor assembly connector.
(d) Connect negative (–) terminal cable to the battery, and wait at least for 2 seconds.

CHECK:

(a) Turn ignition switch to ON, and wait at least for 20 seconds.
(b) Clear DTC stored in memory.
(See page DI–588)
(c) Turn ignition switch to LOCK, and wait at least for 20 seconds.
(d) Turn ignition switch to ON, and wait at least for 20 seconds.
(e) Check DTC.
(See page DI–588)

OK:

DTC B1158/B1159/16 is not output.

HINT:
Codes other than code B1158/B1159/16 may be output at this time, but they are not relevant to this check.

NG → **Replace airbag sensor assembly.**

OK

From the results of the above inspection, the malfunctioning part can now be considered normal. To make sure of this, use the simulation method to check.

6	Check front airbag sensor (LH).

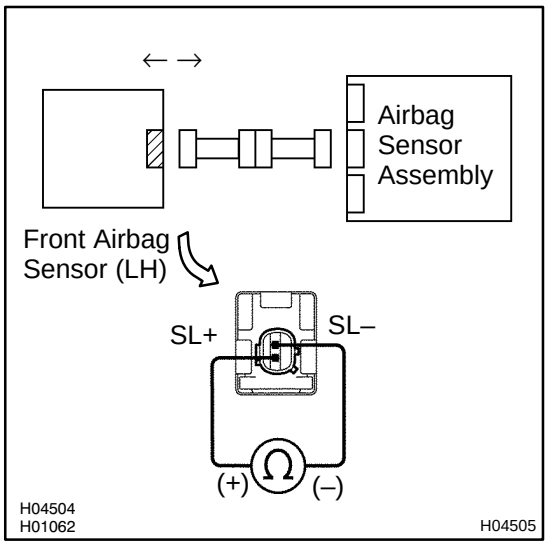

PREPARATION:

Disconnect the front airbag sensor connector (LH).

CHECK:

For the connector (on the front airbag sensor side), measure the resistance between SL+ and SL–.

OK:

Resistance: 754 – 886 Ω

NG → **Replace front airbag sensor (LH).**

OK

7	Check cowl wire harness.

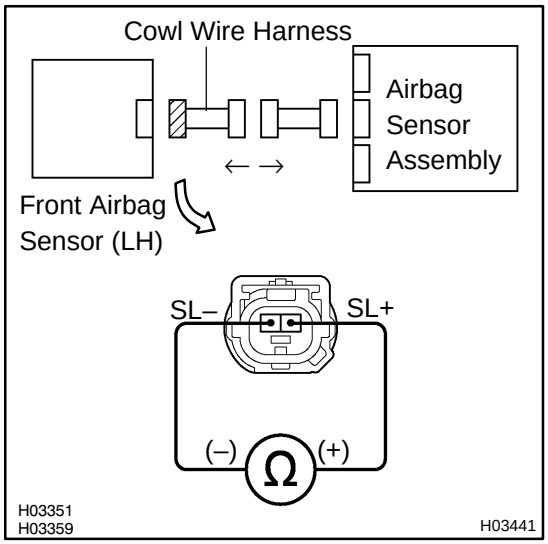

PREPARATION:

Disconnect the cowl wire harness connector on the airbag sensor assembly side.

CHECK:

For the connector (on the cowl wire harness side) between the front airbag sensor (LH) and the cowl wire harness, measure the resistance between SL+ and SL–.

OK:

Resistance: 1 MΩ or Higher

NG → **Repair or replace cowl wire harness.**

OK

8	Check cowl wire harness.

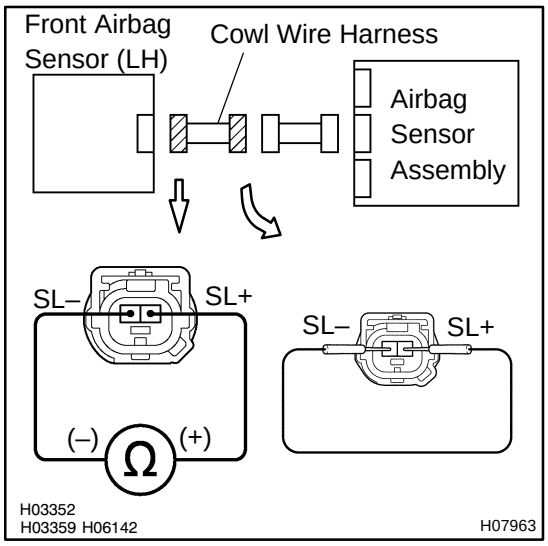

PREPARATION:

Using service wire, connect SL+ and SL– of the connector (on the cowl wire harness side), between the airbag sensor assembly and the cowl wire harness.

CHECK:

For the connector (on the cowl wire harness side) between the front airbag sensor (LH) and the cowl wire harness, measure the resistance between SL+ and SL–.

OK:

Resistance: Below 1 Ω

NG → **Repair or replace cowl wire harness.**

OK

Repair or replace harness or connector between airbag sensor assembly and cowl wire harness.

9	Check wire harness (to ground).

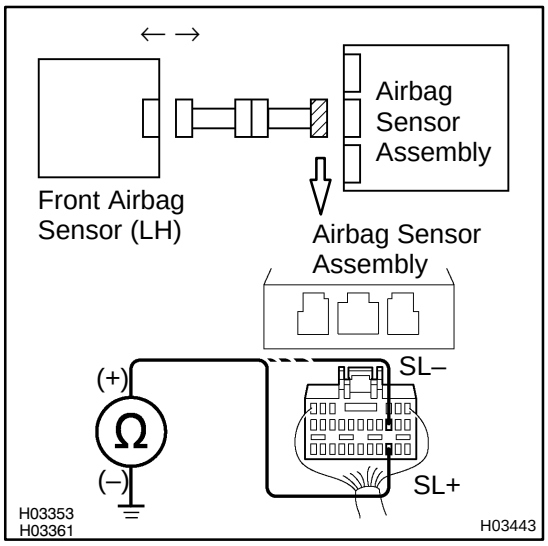

PREPARATION:
Disconnect the front airbag sensor connector (LH).
CHECK:
For the connector (on the airbag sensor assembly side) between the front airbag sensor (LH) and the airbag sensor assembly, measure the resistance between body ground and each of SL+ and SL–.
OK:
Resistance:1 MΩ or Higher

OK	Replace front airbag sensor (LH).

NG

10	Check cowl wire harness (to ground).

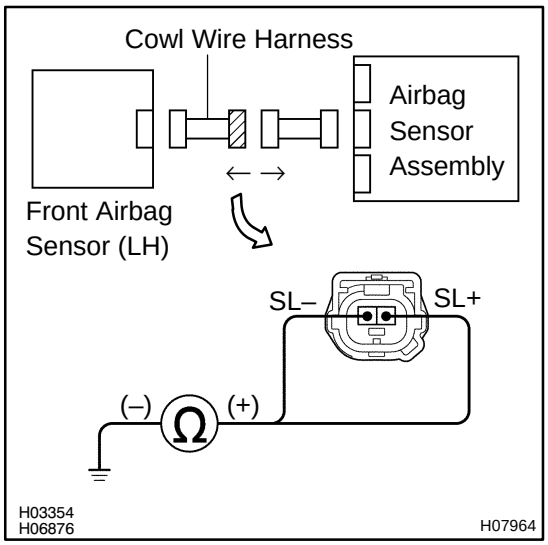

PREPARATION:
Disconnect the cowl wire harness connector on the airbag sensor assembly side.
CHECK:
For the connector (on the cowl wire harness side) between the front airbag sensor (LH) and the cowl wire harness, measure the resistance between body ground and each of SL+ and SL–.
OK:
Resistance:1 MΩ or Higher

NG	Repair or replace cowl wire harness.

OK

Repair or replace harness or connector between airbag sensor assembly and cowl wire harness.

11	Check wire harness (to B+).

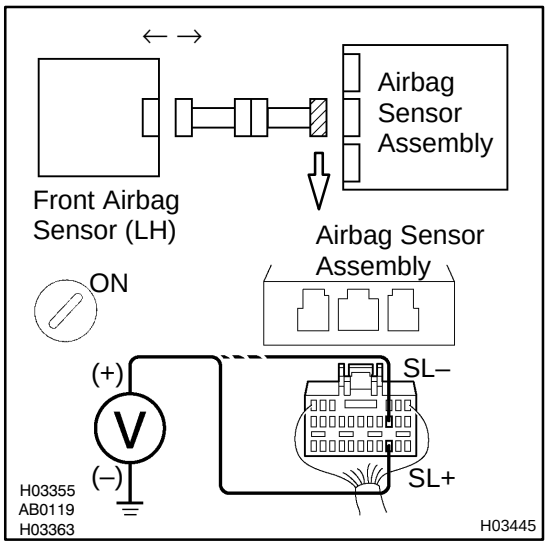

PREPARATION:

(a) Disconnect the front airbag sensor connector (LH).

(b) Turn ignition switch to ON.

CHECK:

For the connector (on the airbag sensor assembly side) between the front airbag sensor (LH) and the airbag sensor assembly, measure the voltage between body ground and each of SL+ and SL–.

OK:

Voltage: Below 1 V

OK	Replace front airbag sensor (LH).

NG

12	Check cowl wire harness (to B+).

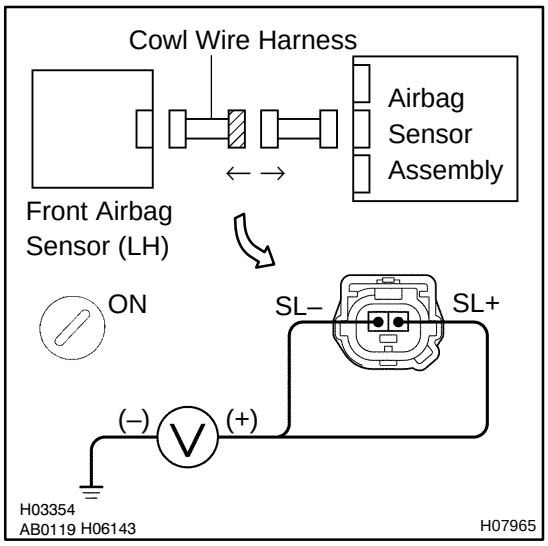

PREPARATION:

Disconnect the cowl wire harness connector on the airbag sensor assembly side.

CHECK:

For the connector (on the cowl wire harness side) between the front airbag sensor (LH) and the cowl wire harness, measure the voltage between body ground and each of SL+ and SL–.

OK:

Voltage: Below 1 V

NG	Repair or replace cowl wire harness.

OK

Repair or replace harness or connector between airbag sensor assembly and cowl wire harness.

DI18Y–03

DTC	B1100/31	Airbag Sensor Assembly Malfunction

CIRCUIT DESCRIPTION

The airbag sensor assembly consists of a airbag sensor, safing sensor, drive circuit, diagnosis circuit and ignition control, etc..
It receives signals from the airbag sensor, judges whether or not the SRS must be activated, and detects diagnosis system malfunction.
DTC B1100/31 is recorded when occurrence of a malfunction in the airbag sensor assembly is detected.

DTC No.	DTC Detecting Condition	Trouble Area
B1100/31	• Airbag sensor assembly malfunction	• Airbag sensor assembly

INSPECTION PROCEDURE

HINT:
When a malfunction code other than code B1100/31 is displayed at the same time, first repair the malfunction indicated by the malfunction code other than code B1100/31.

1	**Prepare for inspection. (See step 1 on page DI–675)**

2	**Check voltage at IG1 and IG2 of airbag sensor assembly.**

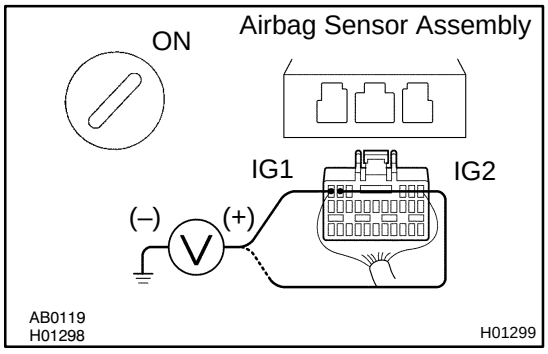

PREPARATION:
Turn ignition switch to ON.
CHECK:
Measure the voltage between body ground and each of terminals IG1 and IG2 of the airbag sensor assembly and the body ground.
OK:
Voltage: 10 – 14 V

NG → **Check that an abnormality occurs on the battery and charging system.**

OK

3	Is DTC B1100/31 output again?

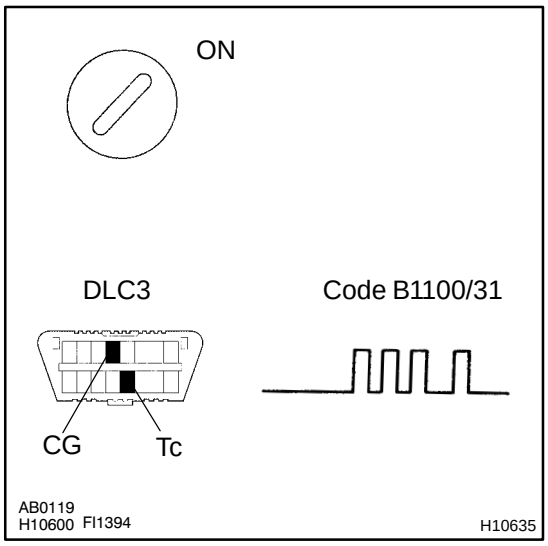

PREPARATION:

Clear malfunction code.

(See step 5 on page DI–588)

CHECK:

(a) Turn ignition switch to LOCK, and wait at least for 20 seconds.

(b) Turn ignition switch to ON, and wait at least for 20 seconds.

(c) Repeat operation in step (a) and (b) at least 5 times.

(d) Check DTC.
(See page DI–588)

NO → **Using simulation method, reproduce malfunction symptoms. (See page IN–18)**

YES

Replace airbag sensor assembly.

DI18Q–38

CIRCUIT INSPECTION

DTC	B0100/13	Short in D Squib Circuit

CIRCUIT DESCRIPTION

The D squib circuit consists of the airbag sensor assembly, spiral cable and steering wheel pad.
It causes the airbag to deploy when the airbag deployment conditions are satisfied.
For details of the function of each component, see OPERATION on page RS–2.
DTC B0100/13 is recorded when a short is detected in the D squib circuit.

DTC No.	DTC Detecting Condition	Trouble Area
B0100/13	• Short circuit between D+ wire harness and D– wire harness of squib • D squib malfunction • Spiral cable malfunction • Airbag sensor assembly malfunction	• Steering wheel pad (D squib) • Spiral cable • Airbag sensor assembly • Wire harness

WIRING DIAGRAM

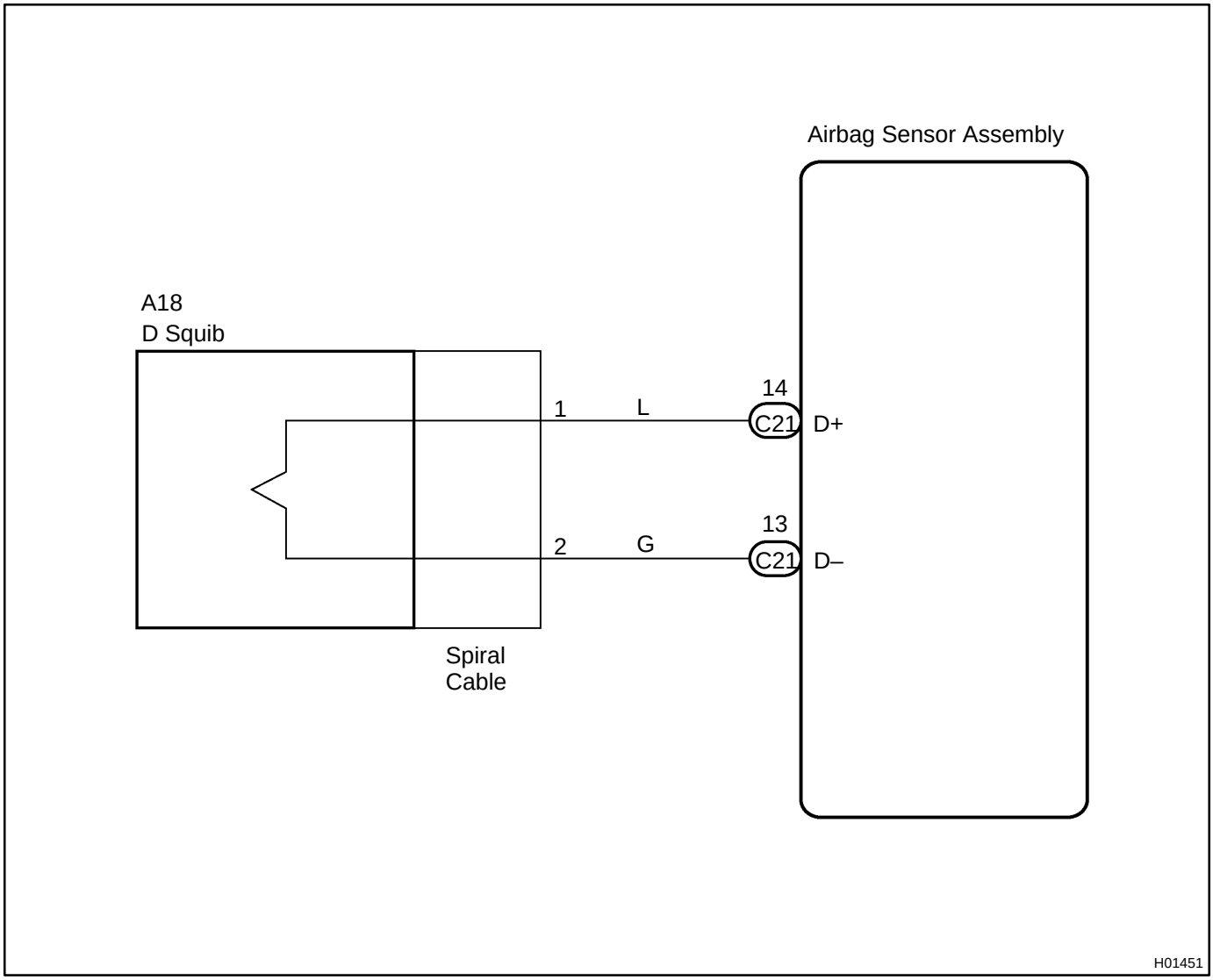

INSPECTION PROCEDURE

1	**Prepare for inspection (See step 1 on page DI–675).**

2	**Check D squib circuit.**

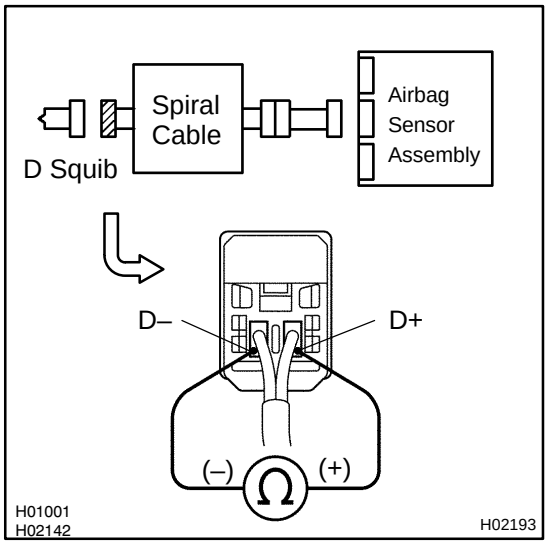

PREPARATION:
Release the airbag activation prevention mechanism of the connector (on the airbag sensor assembly side) between the airbag sensor assembly and the spiral cable
(See page DI–588).

CHECK:
For the connector (on the spiral cable side) between the spiral cable and the steering wheel pad, measure the resistance between D+ and D–.

OK:

Resistance: 1 MΩ or Higher

NG	**Go to step 5.**

OK

3	Check airbag sensor assembly.

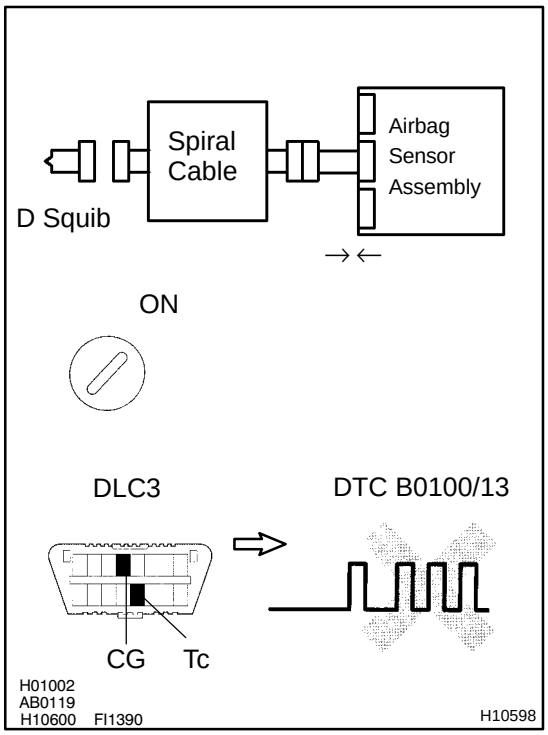

PREPARATION:

(a) Connect the connector to the airbag sensor assembly.
(b) Connect negative (–) terminal cable to the battery, and wait at least for 2 seconds.

CHECK:

(a) Turn the ignition switch to ON and wait at least for 20 seconds.
(b) Clear the DTC stored in memory (See page DI–588).
(c) Turn the ignition switch to LOCK, and wait at least for 20 seconds.
(d) Turn the ignition switch to ON, and wait at least for 20 seconds.
(e) Check the DTC (See page DI–588).

OK:

DTC B0100/13 is not output.

HINT:
Codes other than code B0100/13 may be output at this time, but they are not relevant to this check.

NG → **Replace airbag sensor assembly.**

OK

4	Check D squib.

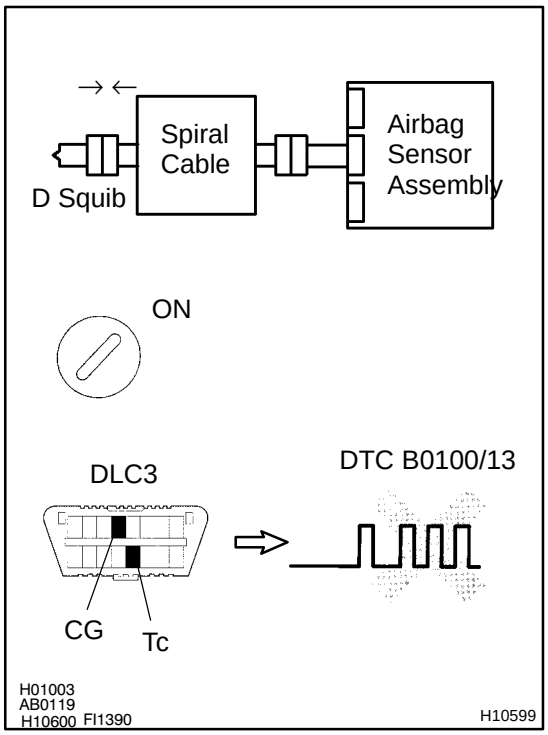

PREPARATION:

(a) Turn the ignition switch to LOCK.
(b) Disconnect negative (–) terminal cable from the battery, and wait at least for 90 seconds.
(c) Connect the steering wheel pad connector.
(d) Connect negative (–) terminal cable to the battery, and wait at least for 2 seconds.

CHECK:

(a) Turn the ignition switch to LOCK, and wait at least for 20 seconds.
(b) Turn the ignition switch to ON, and wait at least for 20 seconds.
(c) Clear the DTC stored in memory (See page DI–588).
(d) Turn the ignition switch to LOCK, and wait at least for 20 seconds.
(e) Turn the ignition switch to ON, and wait at least for 20 seconds.
(f) Check the DTC (See page DI–588).

OK:

DTC B0100/13 is not output.

HINT:

Codes other than code B0100/13 may be output at this time, but they are not relevant to this check.

NG	Replace steering wheel pad.

OK

From the results of the above inspection, the malfunctioning part can now be considered normal. To make sure of this, use the simulation method to check.

5	Check spiral cable.

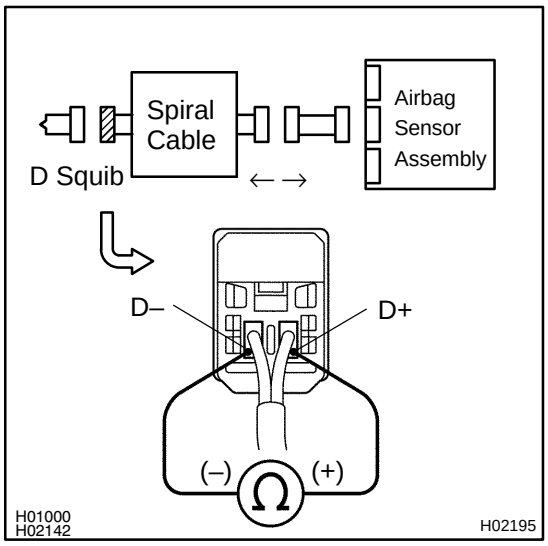

PREPARATION:

(a) Disconnect the connector between the airbag sensor assembly and the spiral cable.

(b) Release the airbag activation prevention mechanism of the spiral cable connector on the airbag sensor assembly side (See page DI–588).

CHECK:

For the connector (on the spiral cable side) between the spiral cable and the steering wheel pad, measure the resistance between D+ and D–.

OK:

Resistance: 1 MΩ or Higher

NG → **Repair or replace spiral cable.**

OK

6	Check harness between airbag sensor assembly and spiral cable.

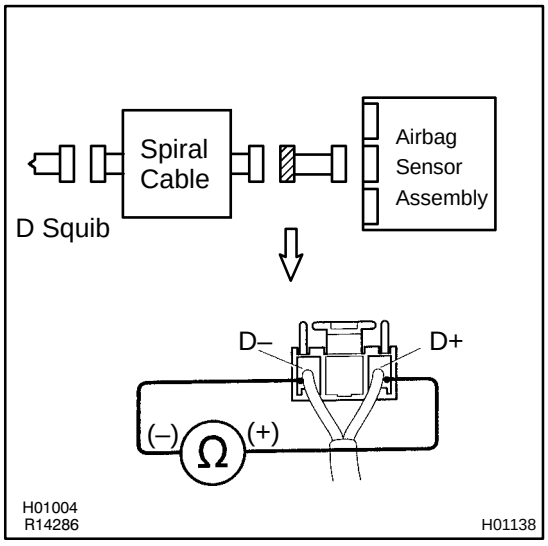

PREPARATION:

Release the airbag activation prevention mechanism of the connector (on the airbag sensor assembly side) between the airbag sensor assembly and the spiral cable
(See page DI–588).

CHECK:

For the connector (on the spiral cable side) between the airbag sensor assembly and the spiral cable, measure the resistance between D+ and D–.

OK:

Resistance: 1 MΩ or Higher

NG → **Repair or replace harness or connector between airbag sensor assembly and spiral cable.**

OK

From the results of the above inspection, the malfunctioning part can now be considered normal. To make sure of this, use the simulation method to check.

DTC	B0101/14	Open in D Squib Circuit

CIRCUIT DESCRIPTION

The D squib circuit consists of the airbag sensor assembly, spiral cable and steering wheel pad.
It causes the airbag to deploy when the airbag deployment conditions are satisfied.
For details of the function of each component, see OPERATION on page RS–2.
DTC B0101/14 is recorded when an open is detected in the D squib circuit.

DTC No.	DTC Detecting Condition	Trouble Area
B0101/14	• Open circuit in D+ wire harness or D– wire harness of squib • D squib malfunction • Spiral cable malfunction • Airbag sensor assembly malfunction	• Steering wheel pad (D squib) • Spiral cable • Airbag sensor assembly • Wire harness

WIRING DIAGRAM

See page DI–599.

INSPECTION PROCEDURE

1	Prepare for inspection (See step 1 on page DI–675).

2	Check D squib circuit.

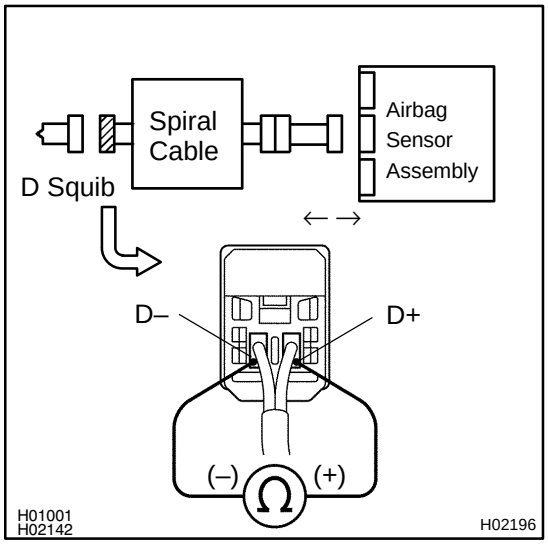

CHECK:

For the connector (on the spiral cable side) between the spiral cable and the steering wheel pad, measure the resistance between D+ and D–.

OK:

Resistance: Below 1 Ω

NG → **Go to step 5.**

OK

3	Check airbag sensor assembly.

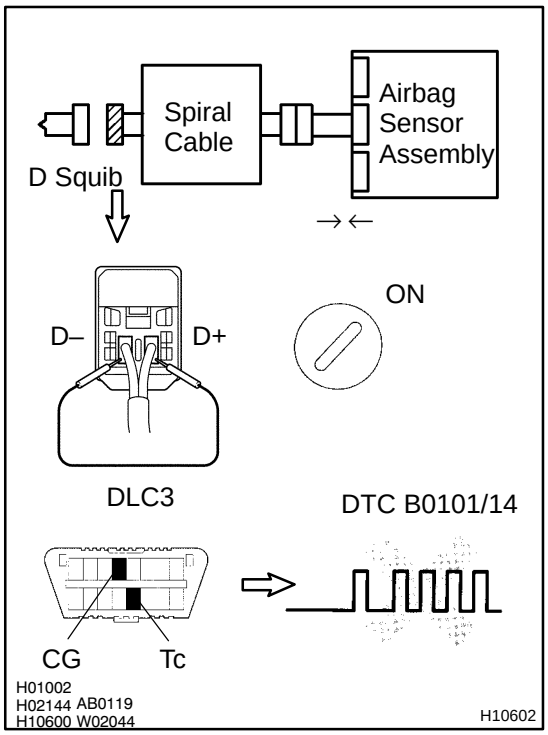

PREPARATION:

(a) Connect the connector to the airbag sensor assembly.
(b) Using a service wire, connect D+ and D– of the connector (on the spiral cable side) between the spiral cable and the steering wheel pad.
(c) Connect negative (–) terminal cable to the battery, and wait at least for 2 seconds.

CHECK:

(a) Turn the ignition switch to ON, and wait at least for 20 seconds.
(b) Clear the DTC stored in memory (See page DI–588).
(c) Turn the ignition switch to LOCK, and wait at least for 20 seconds.
(d) Turn the ignition switch to ON, and wait at least for 20 seconds.
(e) Check the DTC (See page DI–588).

OK:

DTC B0101/14 is not output.

HINT:

Codes other than code B0101/14 may be output at this time, but they are not relevant to this check.

NG	Replace airbag sensor assembly.

OK

4	Check D squib.

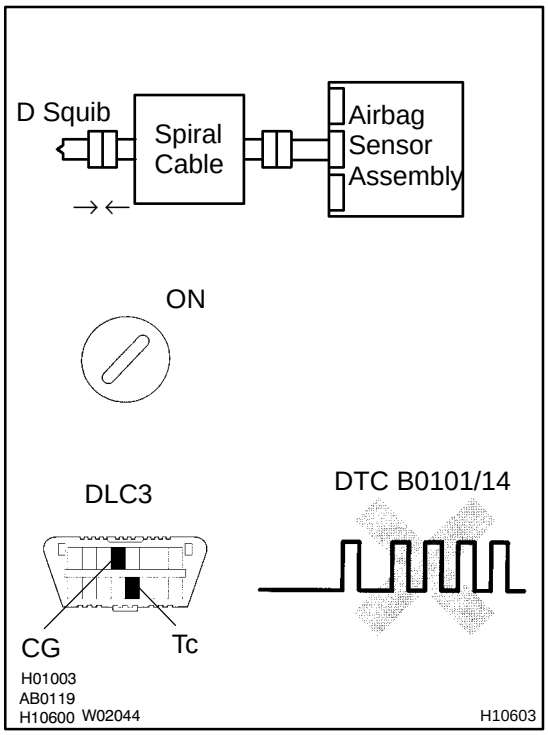

PREPARATION:

(a) Turn the ignition switch to LOCK.
(b) Disconnect negative (–) terminal cable from the battery, and wait at least for 90 seconds.
(c) Connect the steering wheel pad connector.
(d) Connect negative (–) terminal cable to the battery, and wait at least for 2 seconds.

CHECK:

(a) Turn the ignition switch to ON, and wait at least for 20 seconds.
(b) Clear the DTC stored in memory (See page DI–588).
(c) Turn the ignition switch to LOCK, and wait at least for 20 seconds.
(d) Turn the ignition switch to ON, and wait at least for 20 seconds.
(e) Check the DTC (See page DI–588).

OK:

DTC B0101/14 is not output.

HINT:

Codes other than code B0101/14 may be output at this time, but they are not relevant to this check.

NG	Replace steering wheel pad.

OK

From the results of the above inspection, the malfunctioning part can now be considered normal. To make sure of this, use the simulation method to check.

5	Check spiral cable.

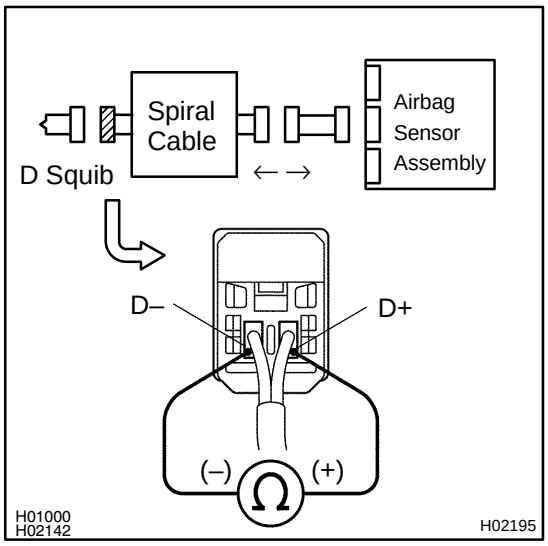

PREPARATION:
Disconnect the connector between the airbag sensor assembly and the spiral cable.

CHECK:
For the connector (on the spiral cable side) between the spiral cable and the steering wheel pad, measure the resistance between D+ and D–.

OK:

Resistance: Below 1 Ω

NG → **Repair or replace spiral cable.**

OK

6	Check harness between airbag sensor assembly and spiral cable.

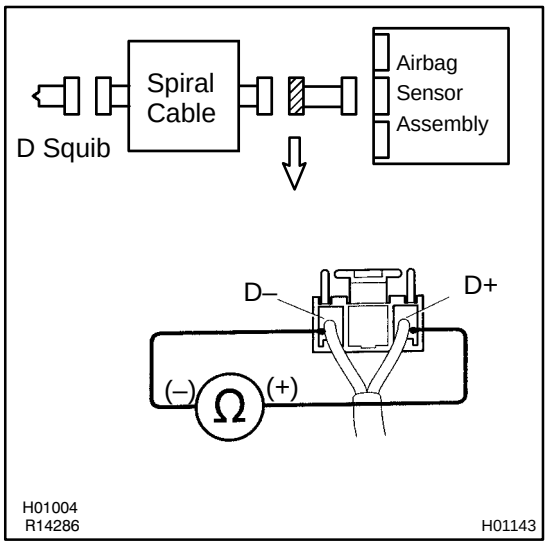

CHECK:
For the connector (on the spiral cable side) between the airbag sensor assembly and the spiral cable, measure the resistance between D+ and D–.

OK:

Resistance: Below 1 Ω

NG → **Repair or replace harness or connector between airbag sensor assembly and spiral cable.**

OK

From the results of the above inspection, the malfunctioning part can now be considered normal. To make sure of this, use the simulation method to check.

DI55B–03

DTC	B0102/11	Short in D Squib Circuit (to Ground)

CIRCUIT DESCRIPTION

The D squib circuit consists of the airbag sensor assembly, spiral cable and steering wheel pad.
It causes the SRS to deploy when the SRS deployment conditions are satisfied.
For details of the function of each component, see OPERATION on page RS–2.
DTC B0102/11 is recorded when a ground short is detected in the D squib circuit.

DTC No.	DTC Detecting Condition	Trouble Area
B0102/11	• Short circuit in D squib wire harness (to ground) • D squib malfunction • Spiral cable malfunction • Airbag sensor assembly malfunction	• Steering wheel pad (D squib) • Spiral cable • Airbag sensor assembly • Wire harness

WIRING DIAGRAM

See page DI–599.

INSPECTION PROCEDURE

1	**Prepare for inspection (See step 1 on page DI–675).**

2	**Check D squib circuit.**

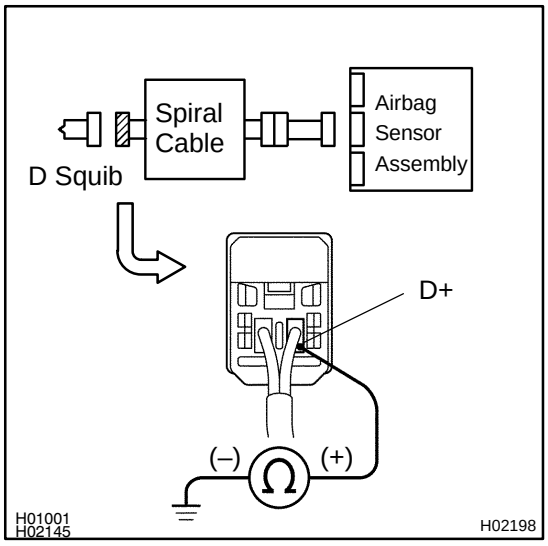

CHECK:

For the connector (on the spiral cable side) between the spiral cable and the steering wheel pad, measure the resistance between D+ and body ground.

OK:

Resistance: 1 MΩ or Higher

NG → **Go to step 5.**

OK

3	Check airbag sensor assembly.

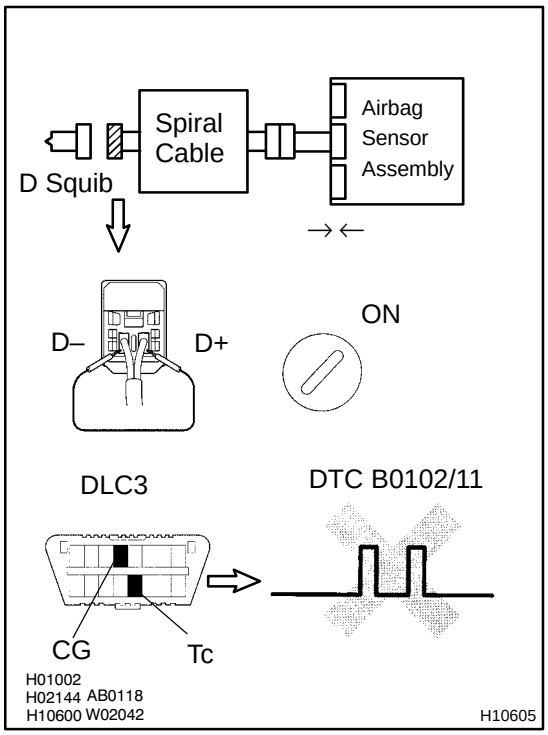

PREPARATION:

(a) Connect the connector to the airbag sensor assembly.
(b) Using a service wire, connect D+ and D– of the connector (on the spiral cable side) between the spiral cable and the steering wheel pad.
(c) Connect negative (–) terminal cable to the battery, and wait at least for 2 seconds.

CHECK:

(a) Turn the ignition switch to ON, and wait at least for 20 seconds.
(b) Clear the DTC stored in memory
(See step 5 on page DI–588).
(c) Turn the ignition switch to LOCK, and wait at least for 20 seconds.
(d) Turn the ignition switch to ON, and wait at least for 20 seconds.
(e) Check the DTC (See page DI–588).

OK:

DTC B0102/11 is not output.

HINT:

Codes other than code B0102/11 may be output at this time, but they are not relevant to this check.

NG	Replace airbag sensor assembly.

OK

4	Check D squib.

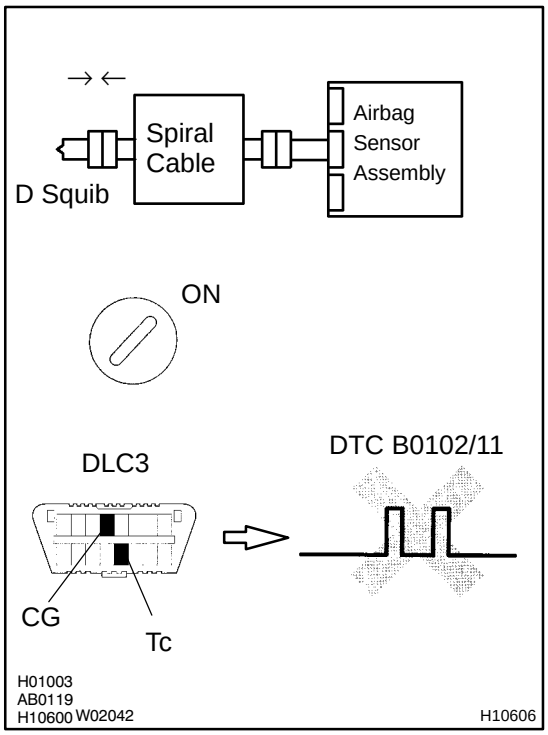

PREPARATION:

(a) Turn the ignition switch to LOCK.
(b) Disconnect negative (–) terminal cable from the battery, and wait at least for 90 seconds.
(c) Connect the steering wheel pad connector.
(d) Connect negative (–) terminal cable to the battery, and wait at least for 2 seconds.

CHECK:

(a) Turn the ignition switch to ON, and wait at least for 20 seconds.
(b) Clear the DTC stored in memory
(See step 5 on page DI–588).
(c) Turn the ignition switch to LOCK, and wait at least for 20 seconds.
(d) Turn the ignition switch to ON, and wait at least for 20 seconds.
(e) Check the DTC (See page DI–588).

OK:

DTC B0102/11 is not output.

HINT:
Codes other than code B0102/11 may be output at this time, but they are not relevant to this check.

NG	Replace steering wheel pad.

OK

From the results of the above inspection, the malfunctioning part can now be considered normal. To make sure of this, use the simulation method to check. If the malfunctioning part can not be detected by the simulation method, replace all SRS components including the wire harness.

5	Check spiral cable.

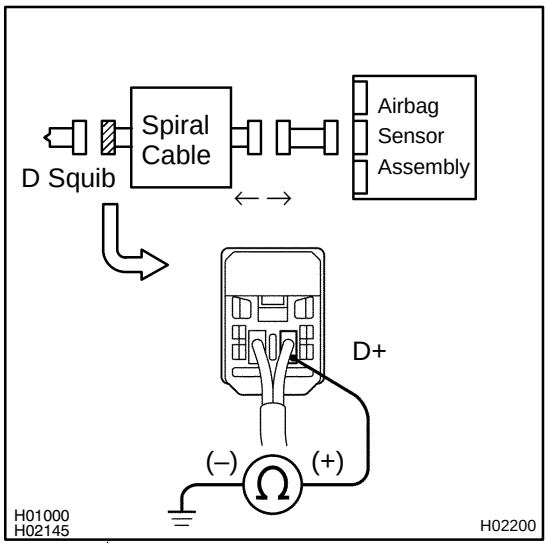

PREPARATION:
Disconnect the connector between the airbag sensor assembly and the spiral cable.
CHECK:
For the connector (on the spiral cable side) between the steering wheel pad and the spiral cable, measure the resistance between D+ and body ground.
OK:
Resistance: 1 MΩ or Higher

NG → **Repair or replace spiral cable.**

OK

6	Check harness between airbag sensor assembly and spiral cable.

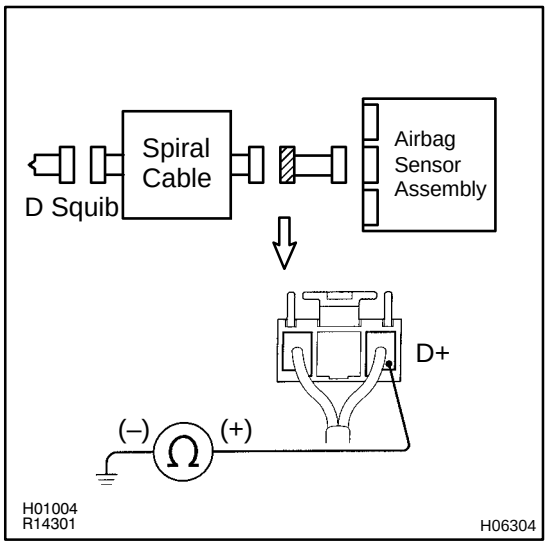

CHECK:
For the connector (on the spiral cable side) between the spiral cable and the airbag sensor assembly, measure the resistance between D+ and body ground.
OK:
Resistance: 1 MΩ or Higher

NG → **Repair or replace harness between airbag sensor assembly and spiral cable.**

OK

From the results of the above inspection, the malfunctioning part can now be considered normal. To make sure of this, use the simulation method to check. If the malfunctioning part can not be detected by the simulation method, replace all SRS components including the wire harness.

DI55C–03

DTC	B0103/12	Short in D Squib Circuit (to B+)

CIRCUIT DESCRIPTION

The D squib circuit consists of the airbag sensor assembly, spiral cable and steering wheel pad.
It causes the SRS to deploy when the SRS deployment conditions are satisfied.
For details of the function of each component, see OPERATION on page RS–2.
DTC B0103/12 is recorded when a B+ short is detected in the D squib circuit.

DTC No.	DTC Detecting Condition	Trouble Area
B0103/12	• Short circuit in D squib wire harness (to B+) • D squib malfunction • Spiral cable malfunction • Airbag sensor assembly malfunction	• Steering wheel pad (D squib) • Spiral cable • Airbag sensor assembly • Wire harness

WIRING DIAGRAM

See page DI–599.

INSPECTION PROCEDURE

1	**Prepare for inspection (See step 1 on page DI–675).**

2	**Check D squib circuit.**

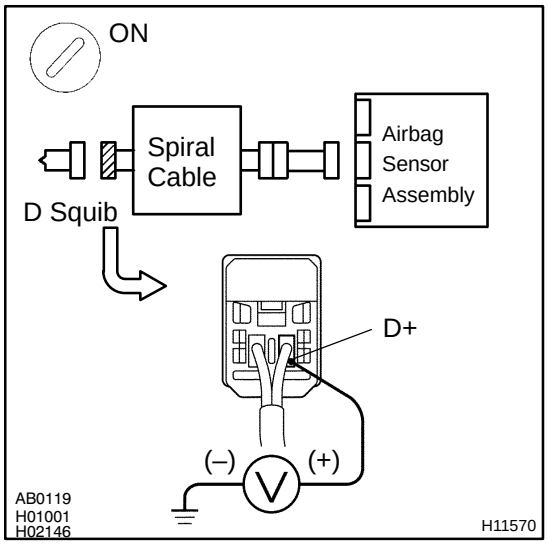

CHECK:

(a) Turn ignition switch to ON.

(b) For the connector (on the spiral cable side) between the spiral cable and the steering wheel pad, measure the voltage between D+ and body ground.

OK:

Voltage: 0 V

NG → **Go to step 5.**

OK

3	Check airbag sensor assembly.

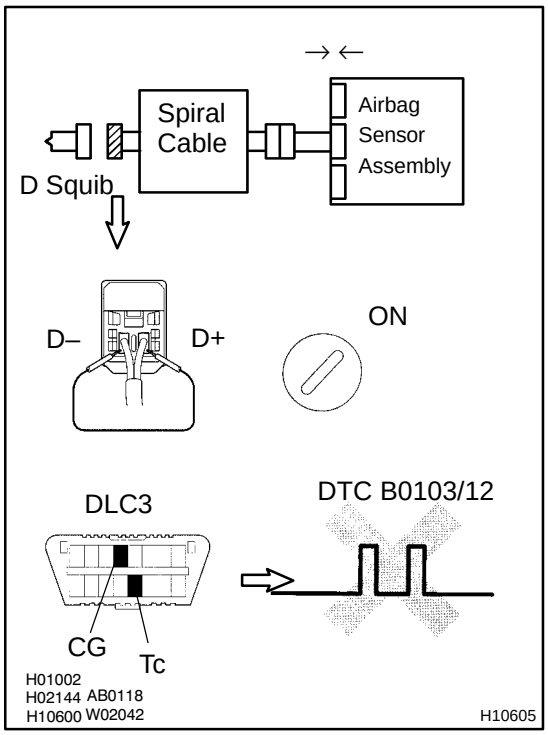

PREPARATION:

(a) Connect the connector to the airbag sensor assembly.
(b) Using a service wire, connect D+ and D– of the connector (on the spiral cable side) between the spiral cable and the steering wheel pad.
(c) Connect negative (–) terminal cable to the battery, and wait at least for 2 seconds.

CHECK:

(a) Turn the ignition switch to ON, and wait at least for 20 seconds.
(b) Clear the DTC stored in memory
(See step 5 on page DI–588).
(c) Turn the ignition switch to LOCK, and wait at least for 20 seconds.
(d) Turn the ignition switch to ON, and wait at least for 20 seconds.
(e) Check the DTC (See page DI–588).

OK:

DTC B0103/12 is not output.

HINT:
Codes other than code B0103/12 may be output at this time, but they are not relevant to this check.

NG	Replace airbag sensor assembly.

OK

4	Check D squib.

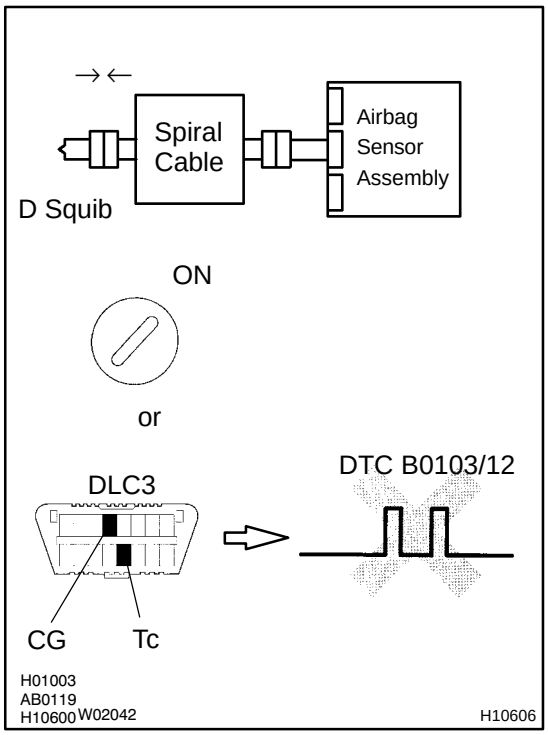

PREPARATION:

(a) Turn the ignition switch to LOCK.
(b) Disconnect negative (–) terminal cable from the battery, and wait at least for 90 seconds.
(c) Connect the steering wheel pad connector.
(d) Connect negative (–) terminal cable to the battery, and wait at least for 2 seconds.

CHECK:

(a) Turn the ignition switch to ON, and wait at least for 20 seconds.
(b) Clear the DTC stored in memory
(See step 5 on page DI–588).
(c) Turn the ignition switch to LOCK, and wait at least for 20 seconds.
(d) Turn the ignition switch to ON, and wait at least for 20 seconds.
(e) Check the DTC (See page DI–588).

OK:

DTC B0103/12 is not output.

HINT:
Codes other than code B0103/12 may be output at this time, but they are not relevant to this check.

NG → **Replace steering wheel pad.**

OK

From the results of the above inspection, the malfunctioning part can now be considered normal. To make sure of this, use the simulation method to check. If the malfunctioning part can not be detected by the simulation method, replace all SRS components including the wire harness.

5	Check spiral cable.

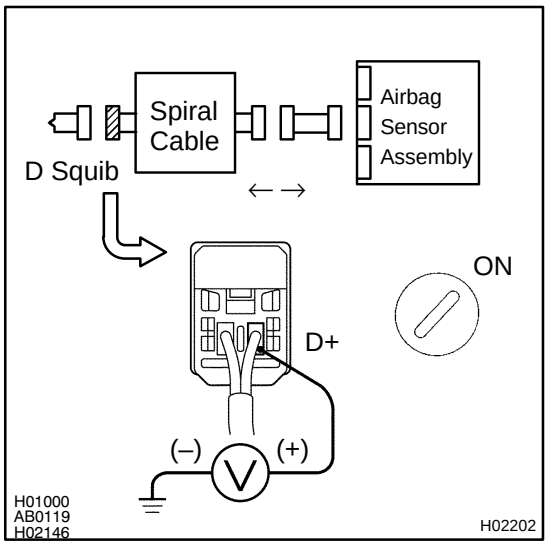

PREPARATION:

(a) Turn the ignition switch to LOCK.

(b) Disconnect the connector between the airbag sensor assembly and the spiral cable.

CHECK:

(a) Turn the ignition switch to ON.

(b) For the connector (on the spiral cable side) between the spiral cable and the steering wheel pad, measure the voltage between D+ and body ground.

OK:

Voltage: 0 V

NG → **Repair or replace spiral cable.**

OK

6	Check harness between airbag sensor assembly and spiral cable.

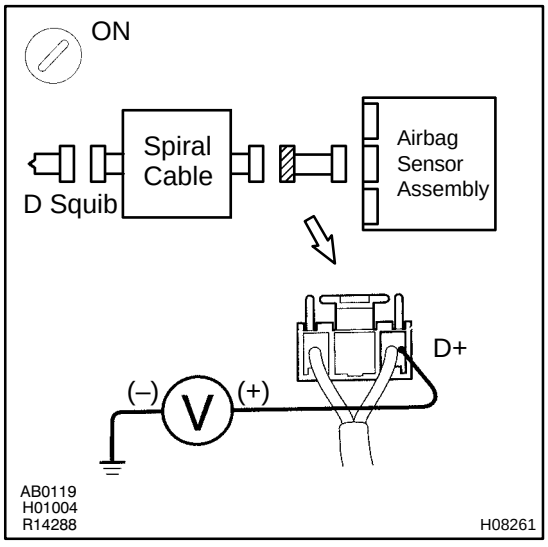

CHECK:

(a) Turn the ignition switch to ON.

(b) For the connector (on the spiral cable side) between the spiral cable and airbag sensor assembly, measure the voltage between D+ and body ground.

OK:

Voltage: 0 V

NG → **Repair or replace harness between airbag sensor assembly and spiral cable.**

OK

From the results of the above inspection, the malfunctioning part can now be considered normal. To make sure of this, use the simulation method to check. If the malfunctioning part can not be detected by the simulation method, replace all SRS components including the wire harness.

DI69Q–04

DTC	B0105/53	Short in P Squib Circuit

CIRCUIT DESCRIPTION

The P squib circuit consists of the airbag sensor assembly and front passenger airbag assembly.
It causes the SRS to deploy when the SRS deployment conditions are satisfied.
For details of the function of each component, see OPERATION on page RS–2.
DTC B0105/53 is recorded when a short is detected in the P squib circuit.

DTC No.	DTC Detecting Condition	Trouble Area
B0105/53	• Short circuit in P squib wire harness • P squib malfunction • Airbag sensor assembly malfunction	• Front passenger airbag assembly (P squib) • Passenger airbag manual on–off switch • Airbag sensor assembly • Wire harness

WIRING DIAGRAM

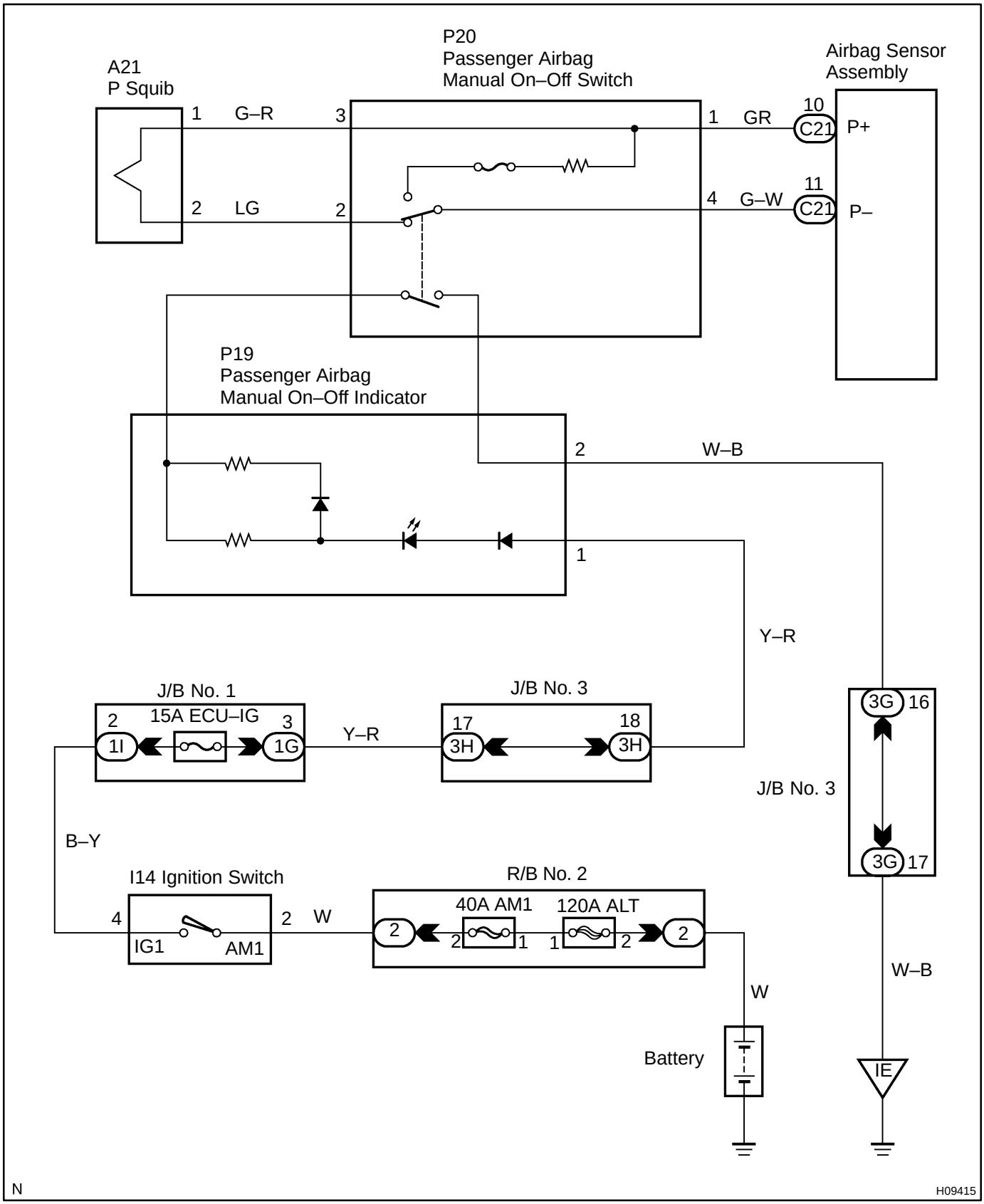

INSPECTION PROCEDURE

1	**Prepare for inspection (See step 1 on page DI–675).**

2	**Check passenger airbag manual on–off switch (See page RS–46).**

NG → **Replace passenger airbag manual on–off switch.**

OK

3	**Check P squib circuit.**

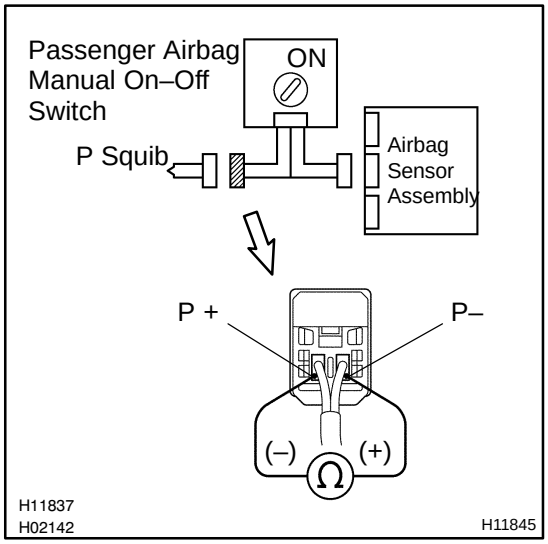

PREPARATION:

(a) Turn the passenger airbag manual on–off switch to ON.

(b) Release the airbag activation prevention mechanism of the connector (on the airbag sensor assembly side) between the front passenger airbag assembly and the airbag sensor assembly (See page DI–588).

CHECK:

For the connector (on the front passenger airbag assembly side) between the front passenger airbag assembly and the airbag sensor assembly, measure the resistance between P+ and P–.

OK:

Resistance: 1 MΩ or Higher

NG → **Repair or replace harness or connector between front passenger airbag assembly and airbag sensor assembly.**

OK

4	Check airbag sensor assembly.

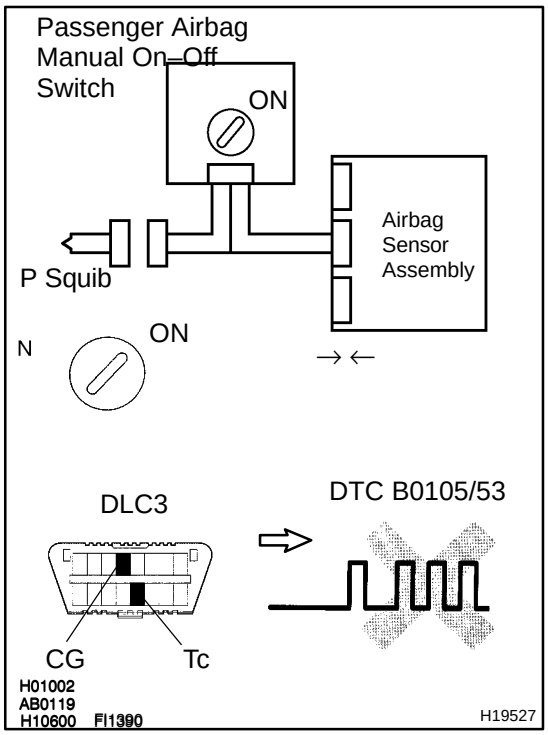

PREPARATION:

(a) Turn the passenger airbag manual on–off switch to ON.
(b) Connect the connector to the airbag sensor assembly.
(c) Connect negative (–) terminal cable to the battery, and wait at least for 2 seconds.

CHECK:

(a) Turn the ignition switch to ON and wait at least for 20 seconds.
(b) Clear the DTC stored in memory (See page DI–588).
(c) Turn the ignition switch to LOCK, and wait at least for 20 seconds.
(d) Turn the ignition switch to ON, and wait at least for 20 seconds.
(e) Check the DTC (See page DI–588).

OK:

DTC B0105/53 is not output.

HINT:

Codes other than code B0105/53 may be output at this time, but they are not relevant to this check.

NG	Replace airbag sensor assembly.

OK

5	Check P squib.

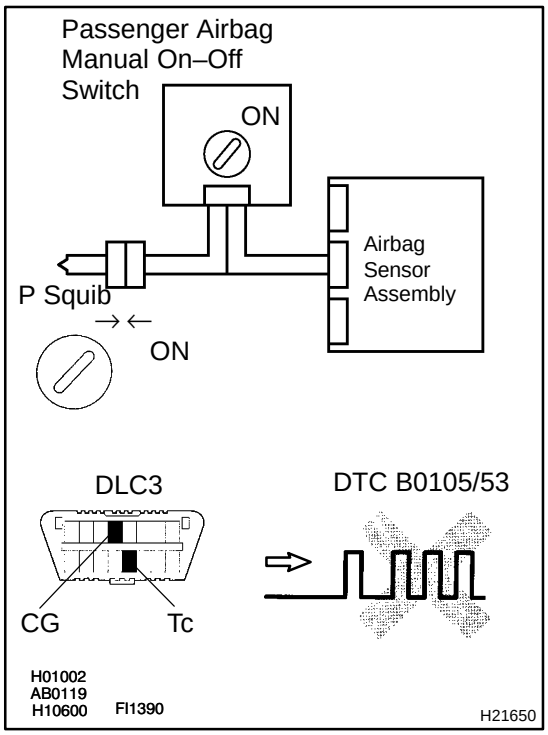

PREPARATION:

(a) Turn the passenger airbag manual on–off switch to ON.
(b) Turn the ignition switch to LOCK.
(c) Disconnect negative (–) terminal cable from the battery, and wait at least for 90 seconds.
(d) Connect the front passenger airbag assembly connector.
(e) Connect negative (–) terminal cable to the battery, and wait at least for 2 seconds.

CHECK:

(a) Turn the ignition switch to LOOK, and wait at least for 20 seconds.
(b) Turn the ignition switch to ON, and wait at least for 20 seconds.
(c) Clear the DTC stored in memory (See page DI–588).
(d) Turn the ignition switch to LOCK, and wait at least for 20 seconds.
(e) Turn the ignition switch to ON, and wait at least for 20 seconds.
(f) Check the DTC (See page DI–588).

OK:

DTC B0105/53 is not output.

HINT:
Codes other than code B0105/53 may be output at this time, but they are not relevant to this check.

NG → **Replace front passenger airbag assembly.**

OK

From the results of the above inspection, the malfunctioning part can now be considered normal. To make sure of this, use the simulation method to check.

DI69R–02

DTC	B0106/54	Open in P Squib Circuit

CIRCUIT DESCRIPTION

The P squib circuit consists of the airbag sensor assembly and front passenger airbag assembly.
It causes the SRS to deploy when the SRS deployment conditions are satisfied.
For details of the function of each component, see OPERATION on page RS–2.
DTC B0106/54 is recorded when an open is detected in the P squib circuit.

DTC No.	DTC Detecting Condition	Trouble Area
B0106/54	• Open circuit in P+ wire harness or P– wire harness of squib • P squib malfunction • Airbag sensor assembly malfunction	• Front passenger airbag assembly (P squib) • Passenger airbag manual on–off switch • Airbag sensor assembly • Wire harness

WIRING DIAGRAM

See page DI–616.

INSPECTION PROCEDURE

1	**Prepare for inspection (See step 1 on page DI–675).**

2	**Check passenger airbag manual on–off switch (See page RS–46).**

NG → **Replace passenger airbag manual on–off switch.**

OK

3	Check P squib circuit.

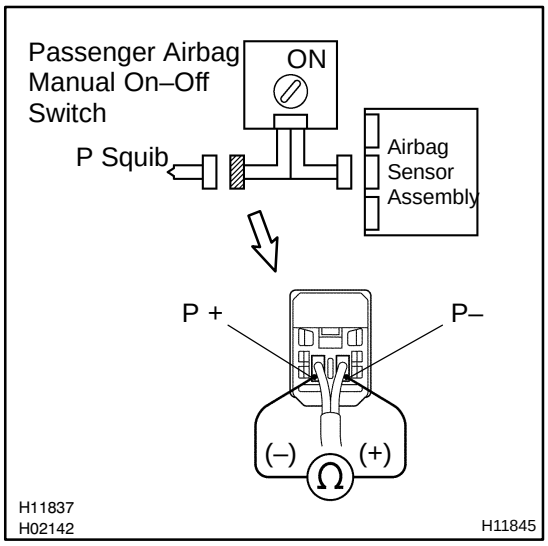

PREPARATION:

Turn the passenger airbag manual on–off switch to ON.

CHECK:

For the connector (on the front passenger airbag assembly side) between the front passenger airbag assembly and the airbag sensor assembly, measure the resistance between P+ and P–.

OK:

Resistance: Below 1 Ω

NG → **Repair or replace harness or connector between front passenger airbag assembly and airbag sensor assembly.**

OK

4	Check airbag sensor assembly.

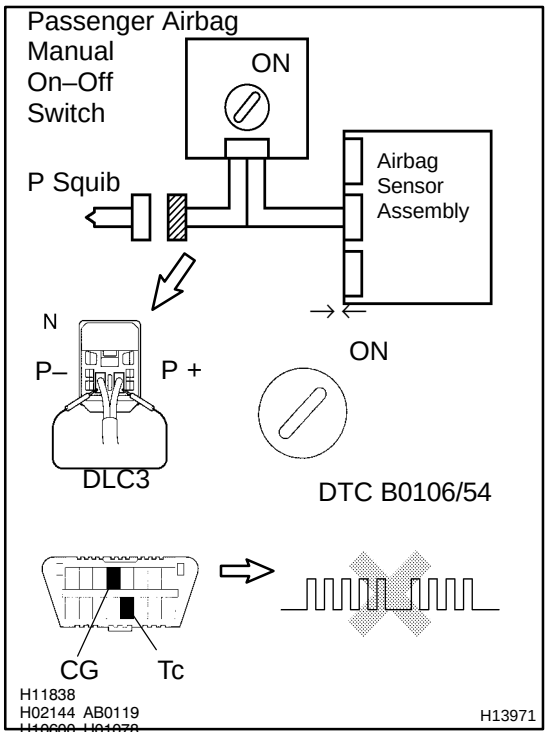

PREPARATION:

(a) Turn the passenger airbag manual on–off switch to ON.
(b) Connect the connector to the airbag sensor assembly.
(c) Using a service wire, connect P+ and P– of the connector (on the front passenger airbag assembly side) between the front passenger airbag assembly and the airbag sensor assembly.
(d) Connect negative (–) terminal cable to the battery, and wait at least for 2 seconds.

CHECK:

(a) Turn the ignition switch to ON and wait at least for 20 seconds.
(b) Clear the DTC stored in memory (See page DI–588).
(c) Turn the ignition switch to LOCK, and wait at least for 20 seconds.
(d) Turn the ignition switch to ON, and wait at least for 20 seconds.
(e) Check the DTC (See page DI–588).

OK:

DTC B0106/54 is not output.

HINT:

Codes other than code B0106/54 may be output at this time, but they are not relevant to this check.

NG → **Replace airbag sensor assembly.**

OK

5	Check P squib.

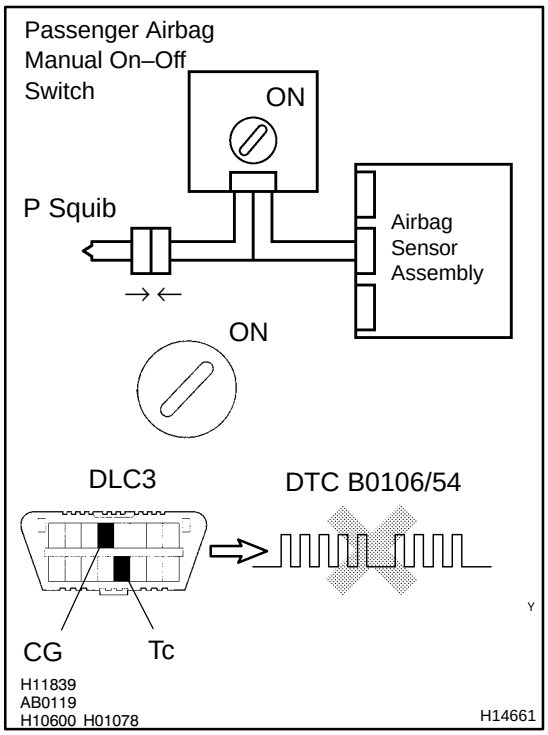

PREPARATION:

(a) Turn the passenger airbag manual on–off switch to ON.
(b) Turn the ignition switch to LOCK.
(c) Disconnect negative (–) terminal cable from the battery, and wait at least for 90 seconds.
(d) Connect the front passenger airbag assembly connector.
(e) Connect negative (–) terminal cable to the battery, and wait at least for 2 seconds.

CHECK:

(a) Turn the ignition switch to ON, and wait at least for 20 seconds.
(b) Clear the DTC stored in memory (See page DI–588).
(c) Turn the ignition switch to LOCK, and wait at least for 20 seconds.
(d) Turn the ignition switch to ON, and wait at least for 20 seconds.
(e) Check the DTC (See page DI–588).

OK:

DTC B0106/54 is not output.

HINT:
Codes other than code B0106/54 may be output at this time, but they are not relevant to this check.

NG → **Replace front passenger airbag assembly.**

OK

From the results of the above inspection, the malfunctioning part can now be considered normal. To make sure of this, use the simulation method to check.

DI18W–04

DTC	B0107/51	Short in P Squib Circuit (to Ground)

CIRCUIT DESCRIPTION

The P squib circuit consists of the airbag sensor assembly and front passenger airbag assembly.
It causes the SRS to deploy when the SRS deployment conditions are satisfied.
For details of the function of each component, see OPERATION on page RS–2.
DTC B0107/51 is recorded when ground short is detected in the P squib circuit.

DTC No.	DTC Detecting Condition	Trouble Area
B0107/51	• Short circuit in P squib wire harness (to ground) • P squib malfunction • Airbag sensor assembly malfunction	• Front passenger airbag assembly (P squib) • Passenger airbag manual on–off switch • Airbag sensor assembly • Wire harness

WIRING DIAGRAM

See page DI–616.

INSPECTION PROCEDURE

1	**Prepare for inspection (See step 1 on page DI–675).**

2	**Check passenger airbag manual on–off switch (See page RS–46).**

NG → **Replace passenger airbag manual on–off switch.**

OK

3	Check P squib circuit.

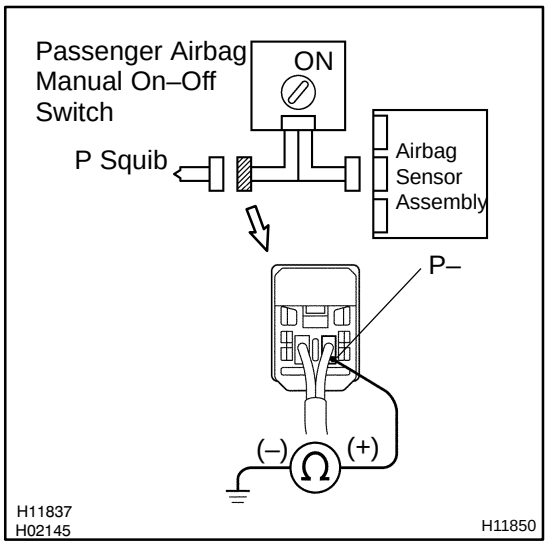

PREPARATION:

Turn the passenger airbag manual on–off switch to ON.

CHECK:

For the connector (on the front passenger airbag assembly side) between the front passenger airbag assembly and the airbag sensor assembly, measure the resistance between P+ and body ground.

OK:

Resistance: 1 MΩ or Higher

NG → **Repair or replace harness or connector between front passenger airbag assembly and airbag sensor assembly.**

OK

4	Check airbag sensor assembly.

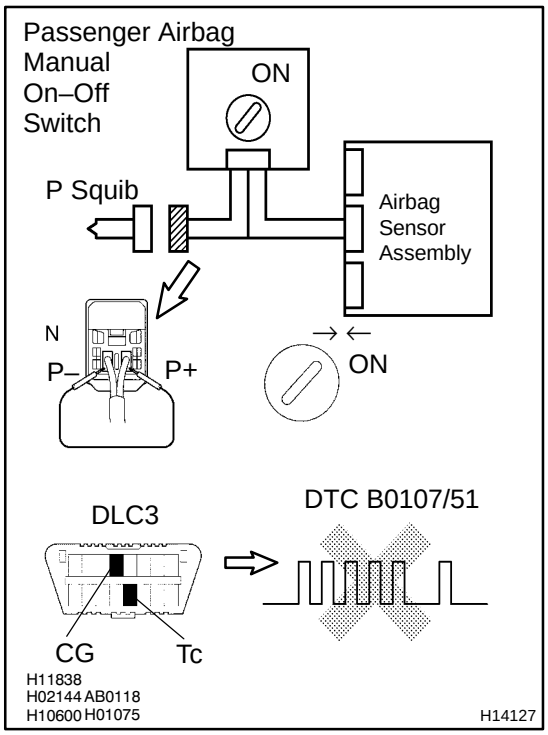

PREPARATION:

(a) Turn the passenger airbag manual on–off switch to ON.
(b) Connect the connector to the airbag sensor assembly.
(c) Using a service wire, connect P+ and P– of the connector (on the front passenger airbag assembly side) between the front passenger airbag assembly and the airbag sensor assembly.
(d) Connect negative (–) terminal cable to the battery, and wait at least for 2 seconds.

CHECK:

(a) Turn the ignition switch to ON and wait at least for 20 seconds.
(b) Clear the DTC stored in memory (See step 5 on page DI–588).
(c) Turn the ignition switch to LOCK, and wait at least for 20 seconds.
(d) Turn the ignition switch to ON, and wait at least for 20 seconds.
(e) Check the DTC (See page DI–588).

OK:

DTC B0107/51 is not output.

HINT:
Codes other than code B0107/51 may be output at this time, but they are not relevant to this check.

NG	Replace airbag sensor assembly.

OK

5	Check P squib.

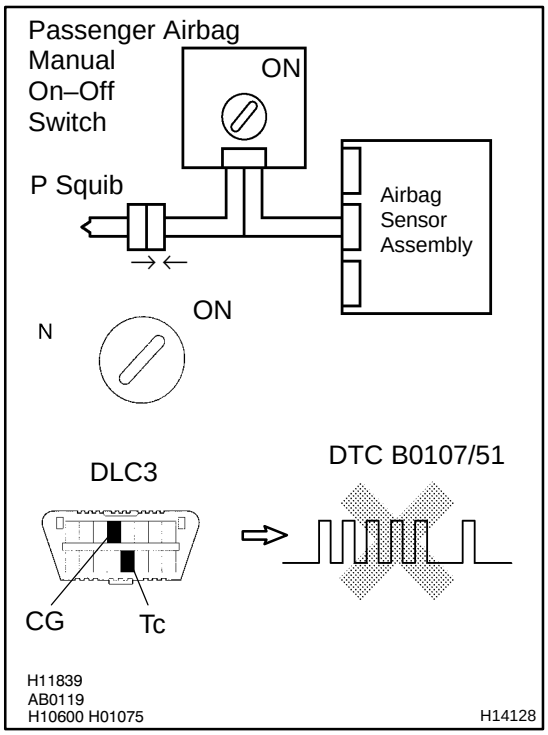

PREPARATION:

(a) Turn the passenger airbag manual on–off switch to ON.
(b) Turn the ignition switch to LOCK.
(c) Disconnect negative (–) terminal cable from the battery, and wait at least for 90 seconds.
(d) Connect the front passenger airbag assembly connector.
(e) Connect negative (–) terminal cable to the battery, and wait at least for 2 seconds.

CHECK:

(a) Turn the ignition switch to or ON, and wait at least for 20 seconds.
(b) Clear the DTC stored in memory (See step 5 on page DI–588).
(c) Turn the ignition switch to LOCK, and wait at least for 20 seconds.
(d) Turn the ignition switch to ON, and wait at least for 20 seconds.
(e) Check the DTC (See page DI–588).

OK:

DTC B0107/51 is not output.

HINT:

Codes other than code B0107/51 may be output at this time, but they are not relevant to this check.

NG → **Replace front passenger airbag assembly.**

OK

From the results of the above inspection, the malfunctioning part can now be considered normal. To make sure of this, use the simulation method to check. If the malfunctioning part can not be detected by the simulation method, replace all SRS components including the wire harness.

DI18X–04

DTC	B0108/52	Short in P Squib Circuit (to B+)

CIRCUIT DESCRIPTION

The P squib circuit consists of the airbag sensor assembly and front passenger airbag assembly.
It causes the SRS to deploy when the SRS deployment conditions are satisfied.
For details of the function of each component, see OPERATION on page RS–2.
DTC B0108/52 is recorded when a B+ short is detected in the P squib circuit.

DTC No.	DTC Detecting Condition	Trouble Area
B0108/52	• Short circuit in P squib wire harness (to B+) • P squib malfunction • Airbag sensor assembly malfunction	• Front passenger airbag assembly (P squib) • Passenger airbag manual on–off switch • Airbag sensor assembly • Wire harness

WIRING DIAGRAM

See page DI–616.

INSPECTION PROCEDURE

1	**Prepare for inspection (See step 1 on page DI–675).**

2	**Check passenger airbag manual on–off switch (See page RS–46).**

NG → **Replace passenger airbag manual on–off switch.**

OK

3	Check P squib circuit.

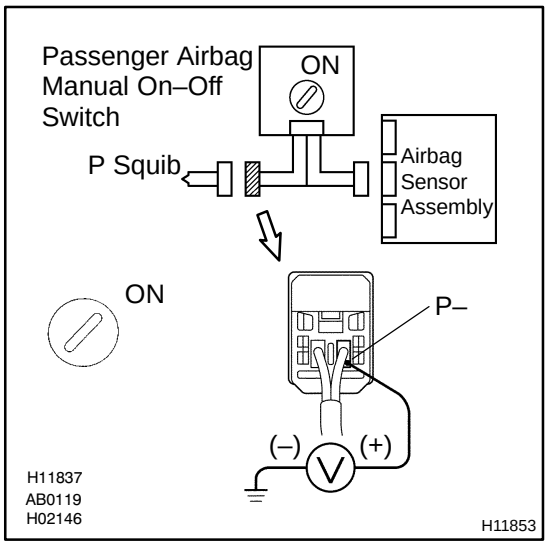

PREPARATION:

Turn the passenger airbag manual on–off switch to ON.

CHECK:

(a) Turn the ignition switch to ON.

(b) For the connector (on the front passenger airbag assembly side) between the front passenger airbag assembly and the airbag sensor assembly, measure the voltage between the P+ and body ground.

OK:

Voltage: 0 V

NG → **Repair or replace harness or connector between front passenger airbag assembly and airbag sensor assembly.**

OK

4	Check airbag sensor assembly.

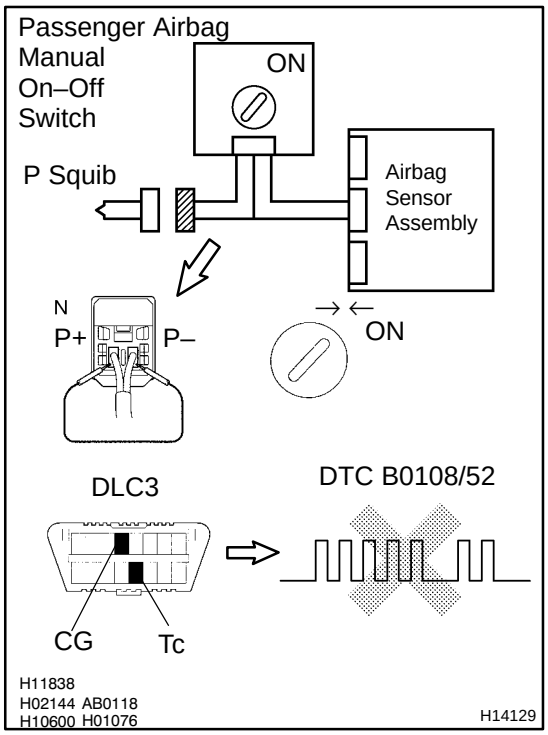

PREPARATION:

(a) Turn the passenger airbag manual on–off switch to ON.
(b) Connect the connector to the airbag sensor assembly.
(c) Using a service wire, connect P+ and P– of the connector (on the front passenger airbag assembly side) between the front passenger airbag assembly and the airbag sensor assembly.
(d) Connect negative (–) terminal cable to the battery, and wait at least for 2 seconds.

CHECK:

(a) Turn the ignition switch to ON and wait at least for 20 seconds.
(b) Clear the DTC stored in memory
(See step 5 on page DI–588).
(c) Turn the ignition switch to LOCK, and wait at least for 20 seconds.
(d) Turn the ignition switch to ON, and wait at least for 20 seconds.
(e) Check the DTC (See page DI–588).

OK:

DTC B0108/52 is not output.

HINT:
Codes other than code B0108/52 may be output at this time, but they are not relevant to this check.

NG	Replace airbag sensor assembly.

OK

5	Check P squib.

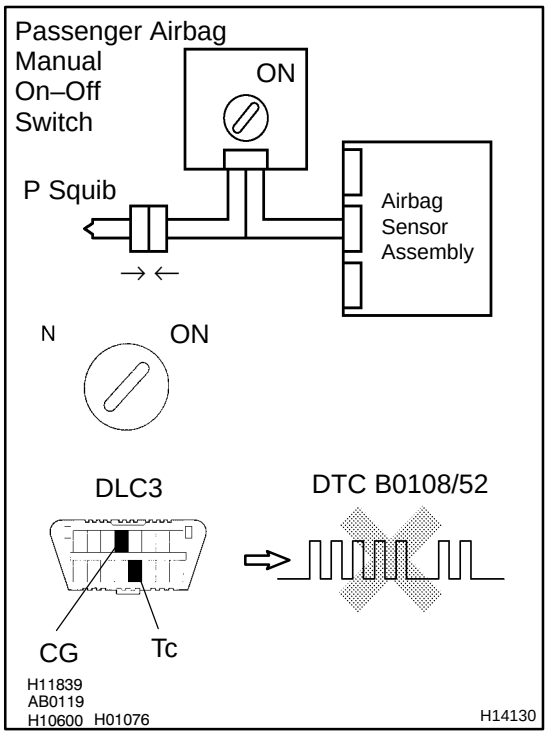

PREPARATION:

(a) Turn the passenger airbag manual on–off switch to ON.
(b) Turn the ignition switch to LOCK.
(c) Disconnect negative (–) terminal cable from the battery, and wait at least for 90 seconds.
(d) Connect the front passenger airbag assembly connector.
(e) Connect negative (–) terminal cable to the battery, and wait at least for 2 seconds.

CHECK:

(a) Turn the ignition switch to ON, and wait at least for 20 seconds.
(b) Clear the DTC stored in memory
(See step 5 on page DI–588).
(c) Turn the ignition switch to LOCK, and wait at least for 20 seconds.
(d) Turn the ignition switch to ON, and wait at least for 20 seconds.
(e) Check the DTC (See page DI–588).

OK:

DTC B0108/52 is not output.

HINT:
Codes other than code B0108/52 may be output at this time, but they are not relevant to this check.

NG → **Replace front passenger airbag assembly.**

OK

From the results of the above inspection, the malfunctioning part can now be considered normal. To make sure of this, use the simulation method to check. If the malfunctioning part can not be detected by the simulation method, replace all SRS components including the wire harness.

DI55D–03

DTC	B0130/63	Short in P/T Squib (RH) Circuit

CIRCUIT DESCRIPTION

The P/T squib (RH) circuit consists of the airbag sensor assembly and seat belt pretensioner (RH).
It causes the SRS to deploy when the SRS deployment conditions are satisfied.
For details of the function of each component, see OPERATION on page RS–2.
DTC B0130/63 is recorded when a short is detected in the P/T squib (RH) circuit.

DTC No.	DTC Detecting Condition	Trouble Area
B0130/63	• Short circuit between PR+ wire harness and PR– wire harness of squib • P/T squib (RH) malfunction • Airbag sensor assembly malfunction	• Seat belt pretensioner (RH) • Airbag sensor assembly • Wire harness

WIRING DIAGRAM

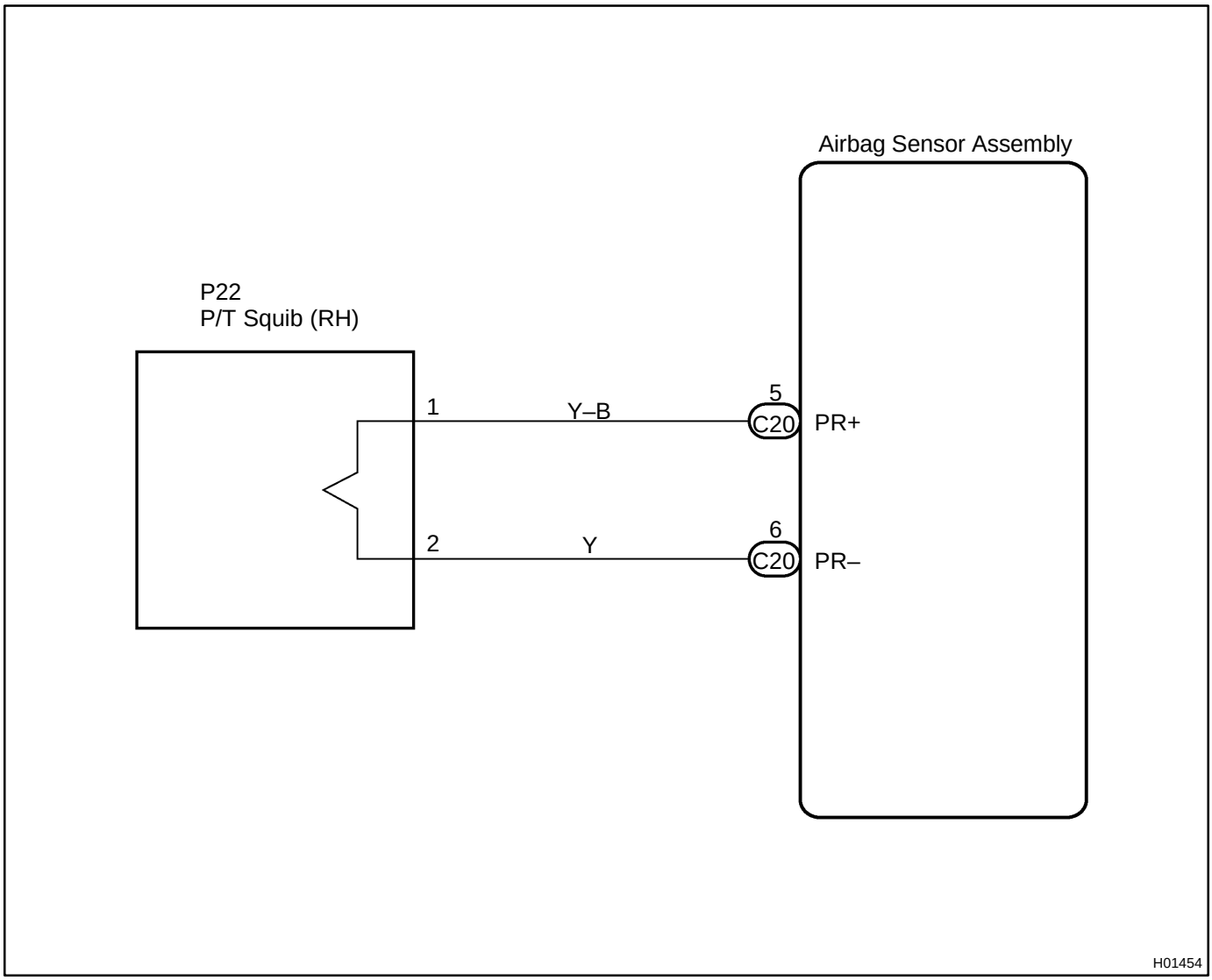

INSPECTION PROCEDURE

1	**Prepare for inspection. (See step 1 on page DI–675)**

2	**Check P/T squib (RH) circuit.**

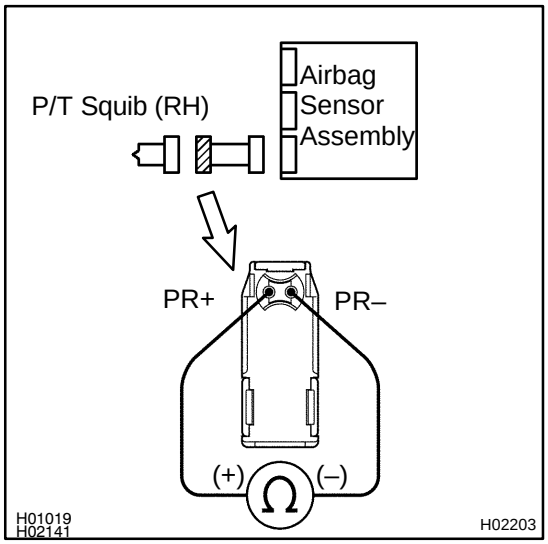

PREPARATION:

Release the airbag activation prevention mechanism of the connector (on the airbag sensor assembly side) between the airbag sensor assembly and the seat belt pretensioner (RH). (See page DI–588).

CHECK:

For the connector (on the seat belt pretensioner side) between the seat belt pretensioner (RH) and the airbag sensor assembly, measure the resistance between PR+ and PR–.

OK:

Resistance: 1 MΩ or Higher

NG → **Repair or replace harness or connector between seat belt pretensioner (RH) and airbag sensor assembly.**

OK

3	Check airbag sensor assembly.

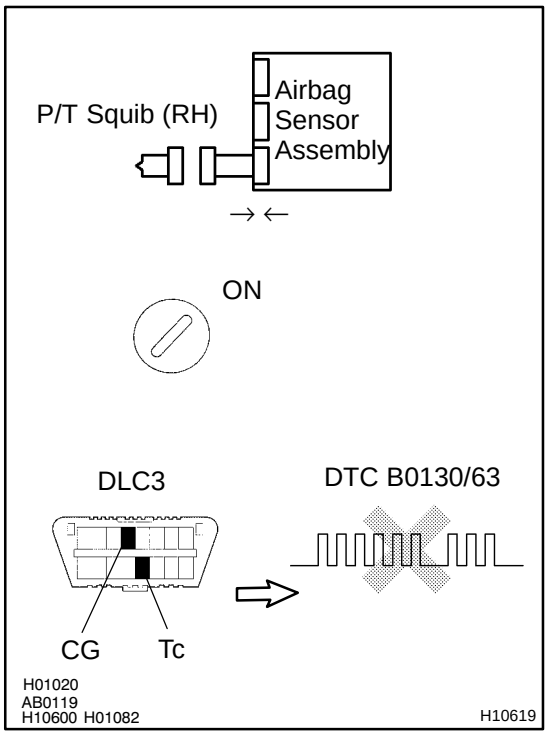

PREPARATION:

(a) Connect the connector to the airbag sensor assembly.
(b) Connect negative (–) terminal cable to the battery, and wait at least for 2 seconds.

CHECK:

(a) Turn ignition switch to ON and wait at least for 20 seconds.
(b) Clear DTC stored in memory.
(See page DI–588)
(c) Turn ignition switch to LOCK, and wait at least for 20 seconds.
(d) Turn ignition switch to ON, and wait at least for 20 seconds.
(e) Check DTC.
(See page DI–588)

OK:

DTC B0130/63 is not output.

HINT:
Codes other than code B0130/63 may be output at this time, but they are not relevant to this check.

NG → **Replace airbag sensor assembly.**

OK

4	Check P/T squib (RH).

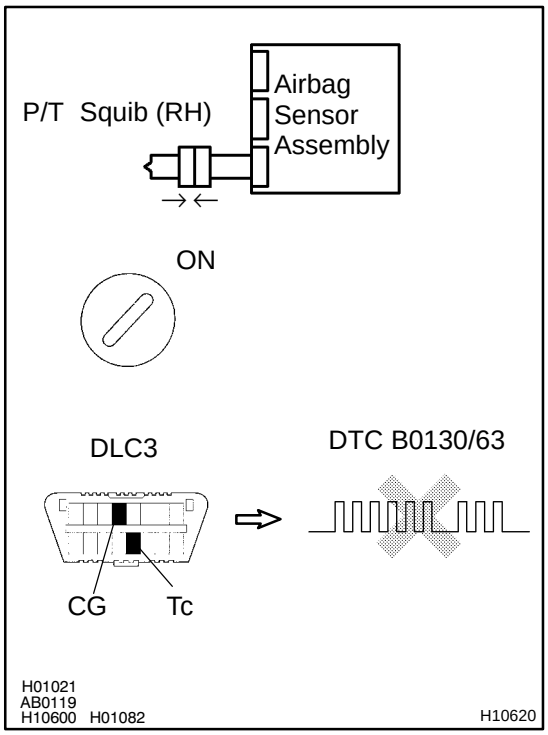

PREPARATION:

(a) Turn ignition switch to LOCK.
(b) Disconnect negative (–) terminal cable from the battery, and wait at least for 90 seconds.
(c) Connect the side airbag assembly (RH) connector.
(d) Connect negative (–) terminal cable to the battery, and wait at least for 2 seconds.

CHECK:

(a) Turn ignition switch to LOOK, and wait at least for 20 second.
(b) Turn ignition switch to ON, and wait at least for 20 seconds.
(c) Clear DTC stored in memory.
(See page DI–588)
(d) Turn ignition switch to LOCK, and wait at least for 20 seconds.
(e) Turn ignition switch to ON, and wait at least for 20 seconds.
(f) Check DTC.
(See page DI–588)

OK:

DTC B0130/63 is not output.

HINT:
Codes other than code B0130/63 may be output at this time, but they are not relevant to this check.

NG → **Replace seat belt pretensioner (RH).**

OK

From the results of the above inspection, the malfunctioning part can now be considered normal. To make sure of this, use the simulation method to check.

DI55E–03

DTC	B0131/64	Open in P/T Squib (RH) Circuit

CIRCUIT DESCRIPTION

The P/T squib circuit (RH) consists of the airbag sensor assembly and seat belt pretensioner (RH).
It causes the SRS to deploy when the SRS deployment conditions are satisfied.
For details of the function of each component, see OPERATION on page RS–2.
DTC B0131/64 is recorded when an open is detected in the P/T squib (RH) circuit.

DTC No.	DTC Detecting Condition	Trouble Area
B0131/64	• Open circuit in PR+ wire harness or PR– wire harness of squib • P/T squib (RH) malfunction • Airbag sensor assembly malfunction	• Seat belt pretensioner (RH) • Airbag sensor assembly • Wire harness

WIRING DIAGRAM

See page DI–633.

INSPECTION PROCEDURE

1	**Prepare for inspection. (See step 1 on page DI–675)**

2	**Check P/T squib (RH) circuit.**

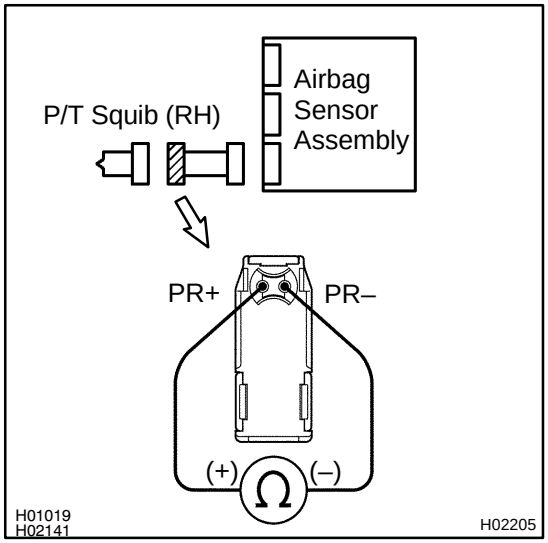

CHECK:

For the connector (on the seat belt pretensioner side) between the seat belt pretensioner (RH) and the airbag sensor assembly, measure the resistance between PR+ and PR–.

OK:

Resistance: Below 1 Ω

NG → **Repair or replace harness or connector between seat belt pretensioner (RH) and airbag sensor assembly.**

OK

3	Check airbag sensor assembly.

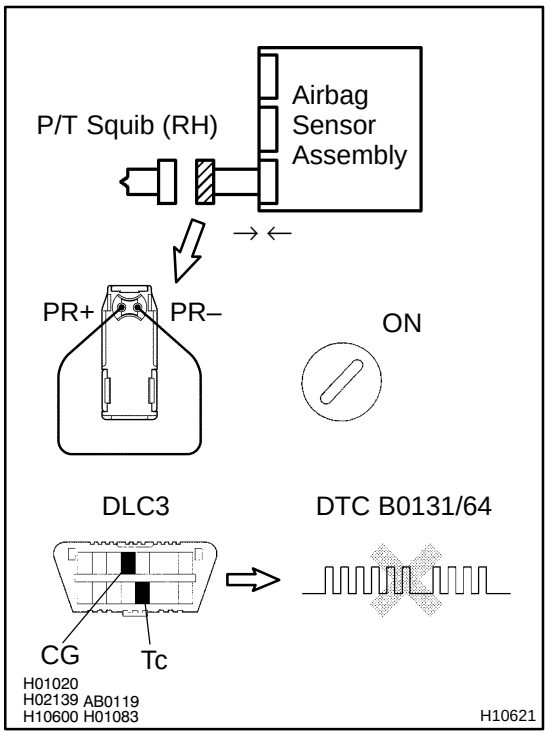

PREPARATION:

(a) Connect the connector to the airbag sensor assembly.

(b) Using a service wire, connect PR+ and PR– of the connector (on the seat belt pretensioner side) between the seat belt pretensioner (RH) and the airbag sensor assembly.

(c) Connect negative (–) terminal cable to the battery, and wait at least for 2 seconds.

CHECK:

(a) Turn ignition switch to ON and wait at least for 20 seconds.

(b) Clear DTC stored in memory.
(See page DI–588)

(c) Turn ignition switch to LOCK, and wait at least for 20 seconds.

(d) Turn ignition switch to ON, and wait at least for 20 seconds.

(e) Check DTC.
(See page DI–588)

OK:

DTC B0131/64 is not output.

HINT:

Codes other than code B0131/64 may be output at this time, but they are not relevant to this check.

NG	Replace airbag sensor assembly.

OK

4	Check P/T squib (RH).

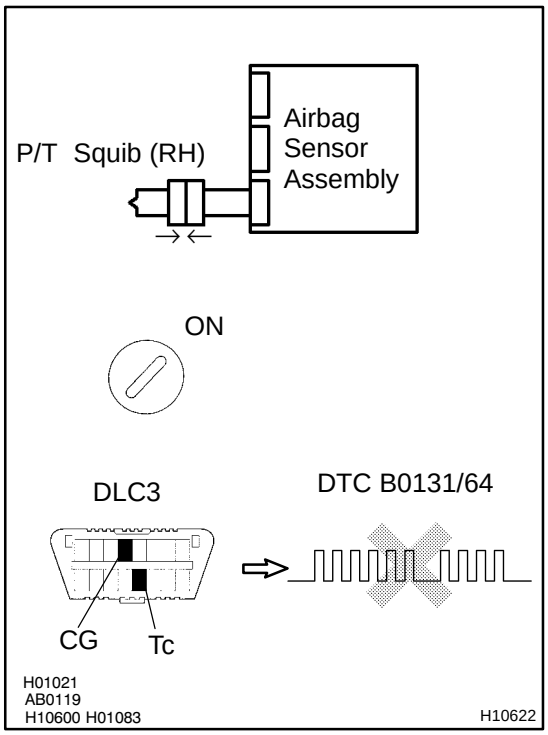

PREPARATION:

(a) Turn ignition switch to LOCK.
(b) Disconnect negative (–) terminal cable from the battery, and wait at least for 90 seconds.
(c) Connect the seat belt pretensioner (RH) connector.
(d) Connect negative (–) terminal cable to the battery, and wait at least for 2 seconds.

CHECK:

(a) Turn ignition switch to ON, and wait at least for 20 seconds.
(b) Clear DTC stored in memory.
(See page DI–588)
(c) Turn ignition switch to LOCK, and wait at least for 20 seconds.
(d) Turn ignition switch to ON, and wait at least for 20 seconds.
(e) Check DTC.
(See page DI–588)

OK:

DTC B0131/64 is not output.

HINT:
Codes other than code B0131/64 may be output at this time, but they are not relevant to this check.

NG → **Replace seat belt pretensioner (RH).**

OK

From the results of the above inspection, the malfunctioning part can now be considered normal. To make sure of this, use the simulation method to check.

DI55F–02

DTC	B0132/61	Short in P/T Squib (RH) Circuit (to Ground)

CIRCUIT DESCRIPTION

The P/T squib (RH) circuit consists of the airbag sensor assembly and seat belt pretensioner (RH).
It causes the SRS to deploy when the SRS deployment conditions are satisfied.
For details of the function of each component, see OPERATION on page RS–2.
DTC B0132/61 is recorded when a ground short is detected in the P/T squib (RH) circuit.

DTC No.	DTC Detecting Condition	Trouble Area
B0132/61	• Short circuit in P/T squib (RH) wire harness (to ground) • P/T squib (RH) malfunction • Airbag sensor assembly malfunction	• Seat belt pretensioner (RH) • Airbag sensor assembly • Wire harness

WIRING DIAGRAM

See page DI–633.

INSPECTION PROCEDURE

1	**Prepare for inspection. (See step 1 on page DI–675)**

2	**Check P/T squib (RH) circuit.**

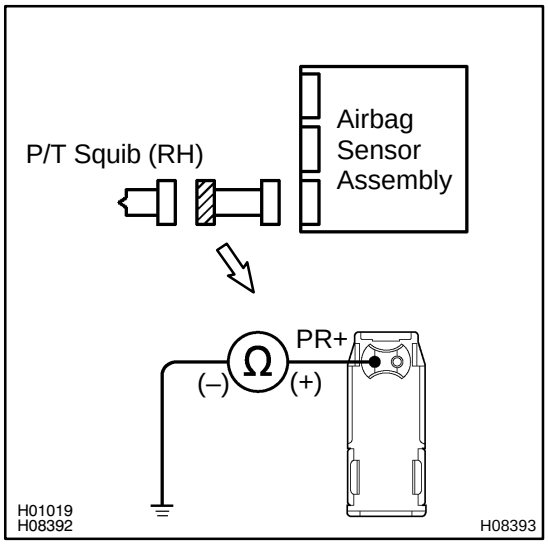

CHECK:

For the connector (on the seat belt pretensioner side) between the seat belt pretensioner (RH) and the airbag sensor assembly, measure the resistance between PR+ and body ground.

OK:

Resistance: 1 MΩ or Higher

NG → **Repair or replace harness or connector between seat belt pretensioner (RH) and airbag sensor assembly.**

OK

3	Check airbag sensor assembly.

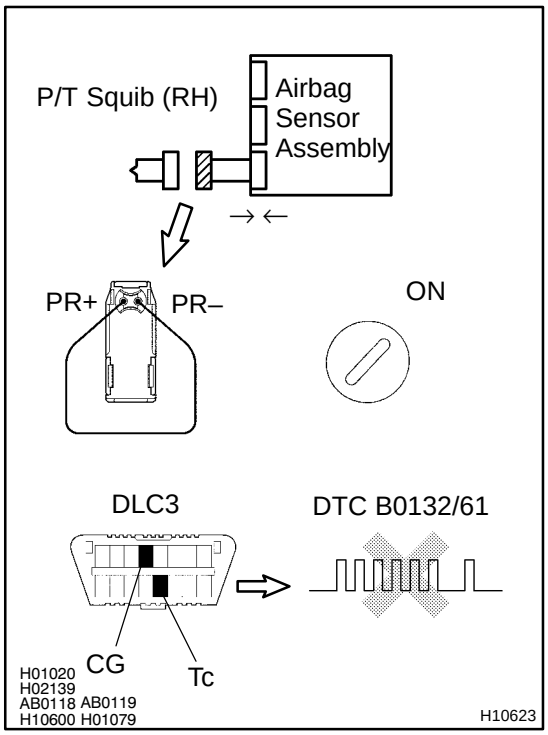

PREPARATION:

(a) Connect the connector to the airbag sensor assembly.

(b) Using a service wire, connect PR+ and PR– of the connector (on the seat belt pretensioner side) between the seat belt pretensioner (RH) and the airbag sensor assembly.

(c) Connect negative (–) terminal cable to the battery, and wait at least for 2 seconds.

CHECK:

(a) Turn ignition switch to ON and wait at least for 20 seconds.

(b) Clear DTC stored in memory.
(See step 5 on page DI–588)

(c) Turn ignition switch to LOCK, and wait at least for 20 seconds.

(d) Turn ignition switch to ON, and wait at least for 20 seconds.

(e) Check DTC.
(See page DI–588)

OK:

DTC B0132/61 is not output.

HINT:

Codes other than code B0132/61 may be output at this time, but they are not relevant to this check.

NG	Replace airbag sensor assembly.

OK

4	Check P/T squib (RH).

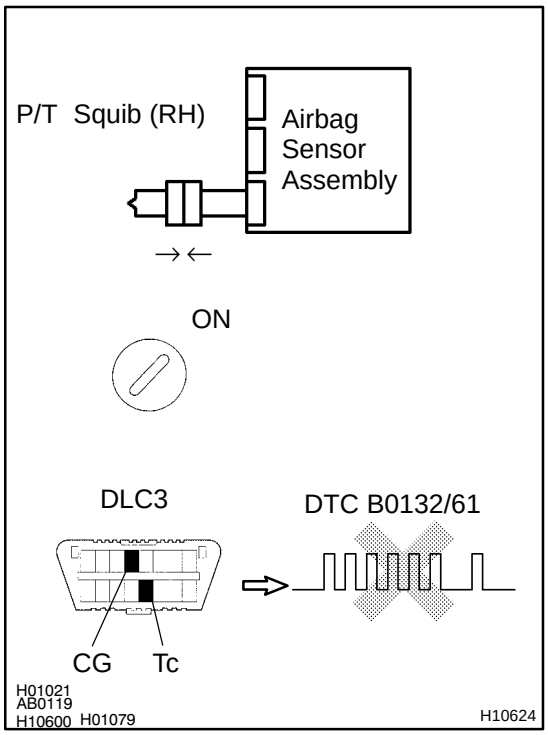

PREPARATION:

(a) Turn ignition switch to LOCK.
(b) Disconnect negative (–) terminal cable from the battery, and wait at least for 90 seconds.
(c) Connect the seat belt pretensioner (RH) connector.
(d) Connect negative (–) terminal cable to the battery, and wait at least for 2 seconds.

CHECK:

(a) Turn ignition switch to ON, and wait at least for 20 seconds.
(b) Clear DTC stored in memory.
(See step 5 on page DI–588)
(c) Turn ignition switch to LOCK, and wait at least for 20 seconds.
(d) Turn ignition switch to ON, and wait at least for 20 seconds.
(e) Check DTC.
(See page DI–588)

OK:

DTC B0132/61 is not output.

HINT:
Codes other than code B0132/61 may be output at this time, but they are not relevant to this check.

NG → **Replace seat belt pretensioner (RH).**

OK

From the results of the above inspection, the malfunctioning part can now be considered normal. To make sure of this, use the simulation method to check. If the malfunctioning part can not be detected by the simulation method, replace all SRS components including the wire harness.

DI55G–03

DTC	B0133/62	Short in P/T Squib (RH) Circuit (to B+)

CIRCUIT DESCRIPTION

The P/T squib (RH) circuit consists of the airbag sensor assembly and seat belt pretensioner (RH).
It causes the SRS to deploy when the SRS deployment conditions are satisfied.
For details of the function of each component, see OPERATION on page RS–2.
DTC B0133/62 is recorded when a B+ short is detected in the P/T squib (RH) circuit.

DTC No.	DTC Detecting Condition	Trouble Area
B0133/62	• Short circuit in seat belt pretensioner (RH) wire harness (to B+) • P/T squib (RH) malfunction • Airbag sensor assembly malfunction	• Seat belt pretensioner (RH) • Airbag sensor assembly • Wire harness

WIRING DIAGRAM

See page DI–633.

INSPECTION PROCEDURE

1	**Prepare for inspection. (See step 1 on page DI–675)**

2	**Check P/T squib (RH) circuit.**

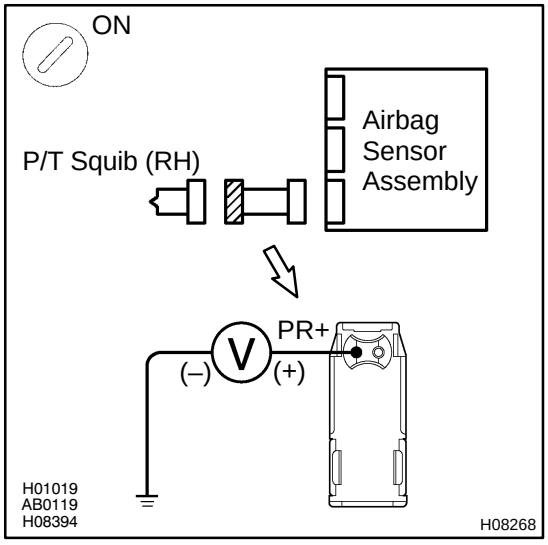

CHECK:

(a) Turn ignition switch to ON.

(b) For the connector (on the seat belt pretensioner side) between the seat belt pretensioner (RH) and the airbag sensor assembly, measure the voltage between PR+ and body ground.

OK:

Voltage: 0 V

NG → **Repair or replace harness or connector between seat belt pretensioner (RH) and airbag sensor assembly.**

OK

3	Check airbag sensor assembly.

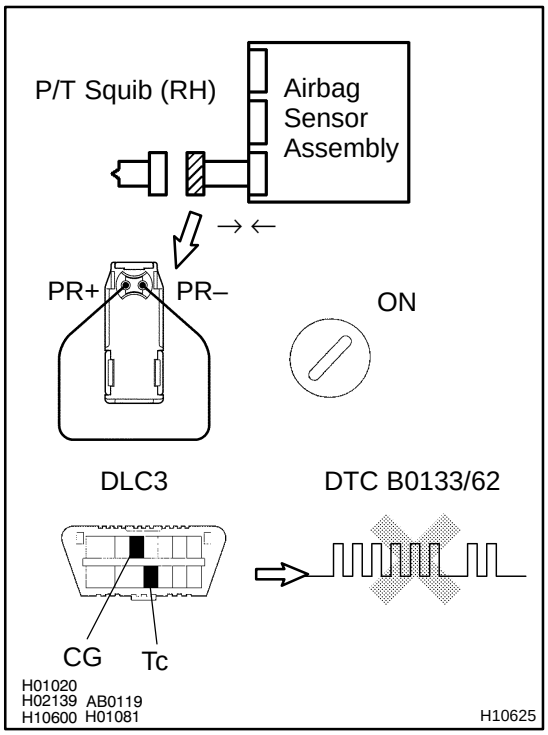

PREPARATION:

(a) Connect the connector to the airbag sensor assembly.

(b) Using a service wire, connect PR+ and PR– of the connector (on the seat belt pretensioner side) between the seat belt pretensioner (RH) and the airbag sensor assembly.

(c) Connect negative (–) terminal cable to the battery, and wait at least for 2 seconds.

CHECK:

(a) Turn ignition switch to ON and wait at least for 20 seconds.

(b) Clear DTC stored in memory.
(See step 5 on page DI–588)

(c) Turn ignition switch to LOCK, and wait at least for 20 seconds.

(d) Turn ignition switch to ON, and wait at least for 20 seconds.

(e) Check DTC.
(See page DI–588)

OK:

DTC B0133/62 is not output.

HINT:

Codes other than code B0133/62 may be output at this time, but they are not relevant to this check.

NG	Replace airbag sensor assembly.

OK

4	Check P/T squib (RH).

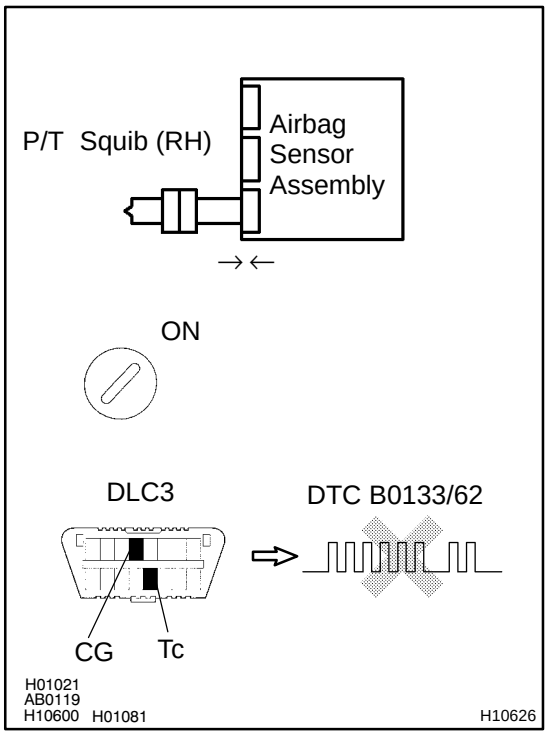

PREPARATION:

(a) Turn ignition switch to LOCK.
(b) Disconnect negative (–) terminal cable from the battery, and wait at least for 90 seconds.
(c) Connect the seat belt pretensioner (RH) connector.
(d) Connect negative (–) terminal cable to the battery, and wait at least for 2 seconds.

CHECK:

(a) Turn ignition switch to ON, and wait at least for 20 seconds.
(b) Clear DTC stored in memory.
(See step 5 on page DI–588)
(c) Turn ignition switch to LOCK, and wait at least for 20 seconds.
(d) Turn ignition switch to ON, and wait at least for 20 seconds.
(e) Check DTC.
(See page DI–588)

OK:

DTC B0133/62 is not output.

HINT:
Codes other than code B0133/62 may be output at this time, but they are not relevant to this check.

NG → **Replace seat belt pretensioner (RH).**

OK

From the results of the above inspection, the malfunctioning part can now be considered normal. To make sure of this, use the simulation method to check. If the malfunctioning part can not be detected by the simulation method, replace all SRS components including the wire harness.

DI55H–02

DTC	B0135/73	Short in P/T Squib (LH) Circuit

CIRCUIT DESCRIPTION

The P/T squib (LH) circuit consists of the airbag sensor assembly and seat belt pretensioner (LH).
It causes the SRS to deploy when the SRS deployment conditions are satisfied.
For details of the function of each component, see OPERATION on page RS–2.
DTC B0135/73 is recorded when a short is detected in the P/T squib (LH) circuit.

DTC No.	DTC Detecting Condition	Trouble Area
B0135/73	• Short circuit between PL+ wire harness and PL– wire harness of squib • P/T squib (LH) malfunction • Airbag sensor assembly malfunction	• Seat belt pretensioner (LH) • Airbag sensor assembly • Wire harness

WIRING DIAGRAM

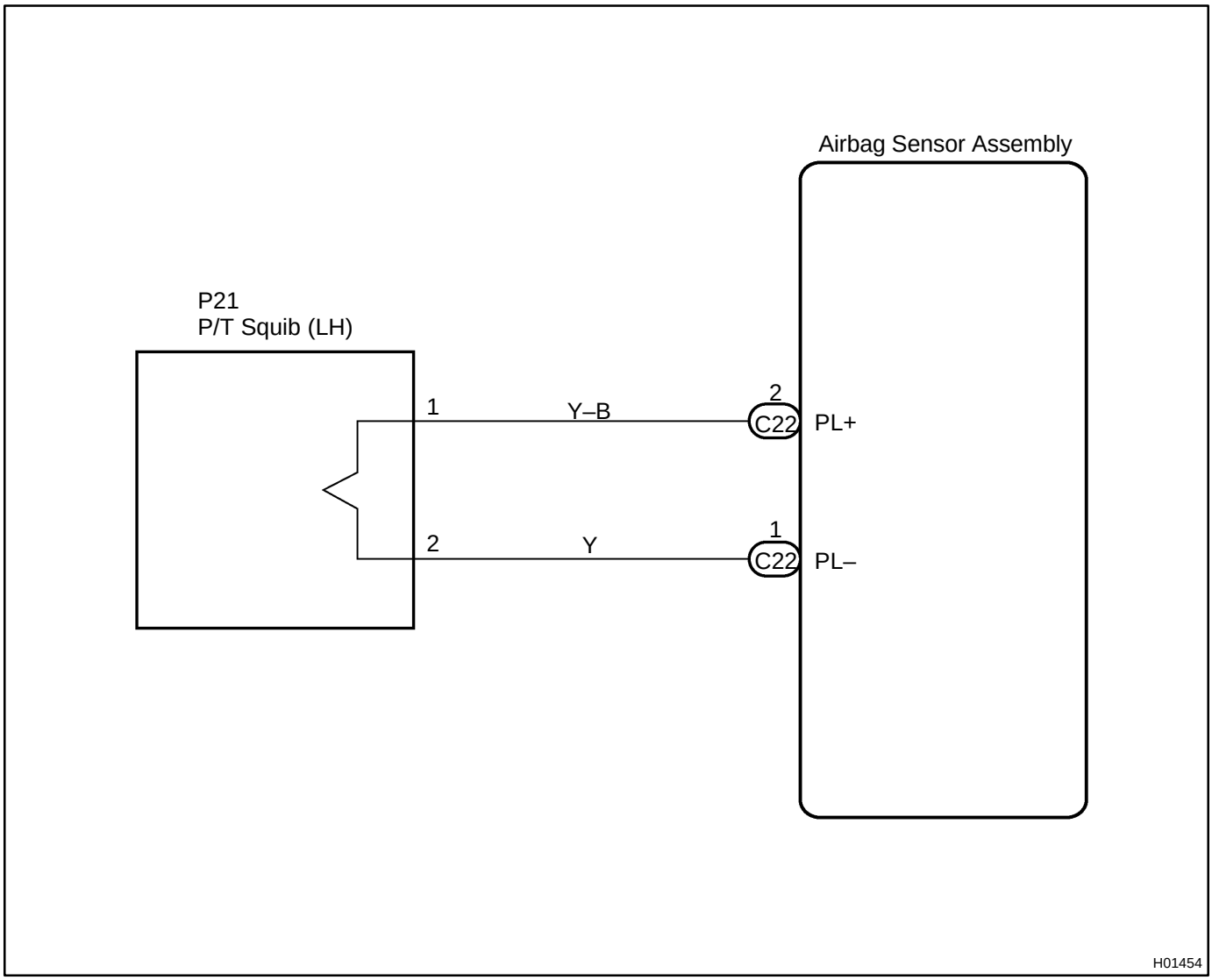

INSPECTION PROCEDURE

1	**Prepare for inspection. (See step 1 on page DI–675)**

2	**Check P/T squib (LH) circuit.**

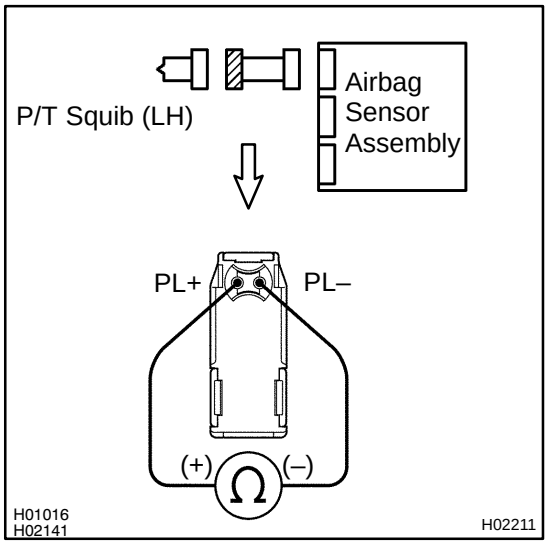

PREPARATION:

Release the airbag activation prevention mechanism of the connector (on the airbag sensor assembly side) between the airbag sensor assembly and the seat belt pretensioner (LH). (See page DI–588)

CHECK:

For the connector (on the seat belt pretensioner side) between the seat belt pretensioner (LH) and the airbag sensor assembly, measure the resistance between PL+ and PL–.

OK:

Resistance: 1 MΩ or Higher

NG → **Repair or replace harness or connector between seat belt pretensioner (LH) and airbag sensor assembly.**

OK

3	Check airbag sensor assembly.

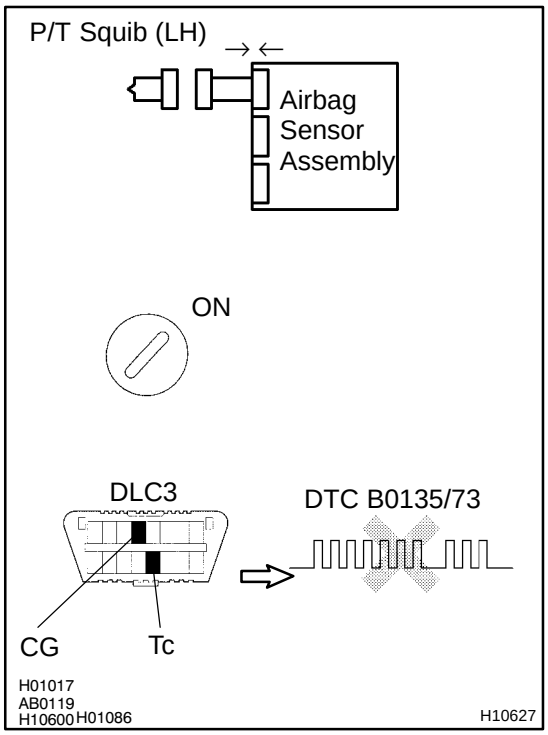

PREPARATION:

(a) Connect the connector to the airbag sensor assembly.
(b) Connect negative (–) terminal cable to the battery, and wait at least for 2 seconds.

CHECK:

(a) Turn ignition switch to ON and wait at least for 20 seconds.
(b) Clear DTC stored in memory.
(See page DI–588)
(c) Turn ignition switch to LOCK, and wait at least for 20 seconds.
(d) Turn ignition switch to ON, and wait at least for 20 seconds.
(e) Check DTC.
(See page DI–588)

OK:

DTC B0135/73 is not output.

HINT:
Codes other than code B0135/73 may be output at this time, but they are not relevant to this check.

NG → **Replace airbag sensor assembly.**

OK

4	Check P/T squib (LH).

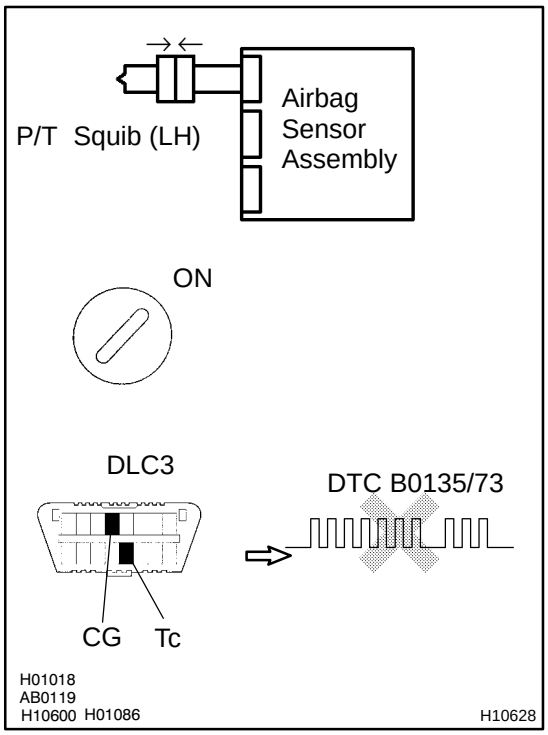

PREPARATION:

(a) Turn ignition switch to LOCK.
(b) Disconnect negative (–) terminal cable from the battery, and wait at least for 90 seconds.
(c) Connect the side airbag assembly (LH) connector.
(d) Connect negative (–) terminal cable to the battery, and wait at least for 2 seconds.

CHECK:

(a) Turn ignition switch to LOOK, and wait at least for 20 second.
(b) Turn ignition switch to ON, and wait at least for 20 seconds.
(c) Clear DTC stored in memory.
(See page DI–588)
(d) Turn ignition switch to LOCK, and wait at least for 20 seconds.
(e) Turn ignition switch to ON, and wait at least for 20 seconds.
(f) Check DTC.
(See page DI–588)

OK:

DTC B0135/73 is not output.

HINT:

Codes other than code B0135/73 may be output at this time, but they are not relevant to this check.

NG → **Replace seat belt pretensioner (LH).**

OK

From the results of the above inspection, the malfunctioning part can now be considered normal. To make sure of this, use the simulation method to check.

DI55I–02

DTC	B0136/74	Open in P/T Squib (LH) Circuit

CIRCUIT DESCRIPTION

The P/T squib circuit (LH) consists of the airbag sensor assembly and seat belt pretensioner (LH).
It causes the SRS to deploy when the SRS deployment conditions are satisfied.
For details of the function of each component, see OPERATION on page RS–2.
DTC B0136/74 is recorded when an open is detected in the P/T squib (LH) circuit.

DTC No.	DTC Detecting Condition	Trouble Area
B0136/74	• Open circuit in PL+ wire harness or PL– wire harness of squib • P/T squib (LH) malfunction • Airbag sensor assembly malfunction	• Seat belt pretensioner (LH) • Airbag sensor assembly • Wire harness

WIRING DIAGRAM

See page DI–646.

INSPECTION PROCEDURE

1	**Prepare for inspection. (See step 1 on page DI–675)**

2	**Check P/T squib (LH) circuit.**

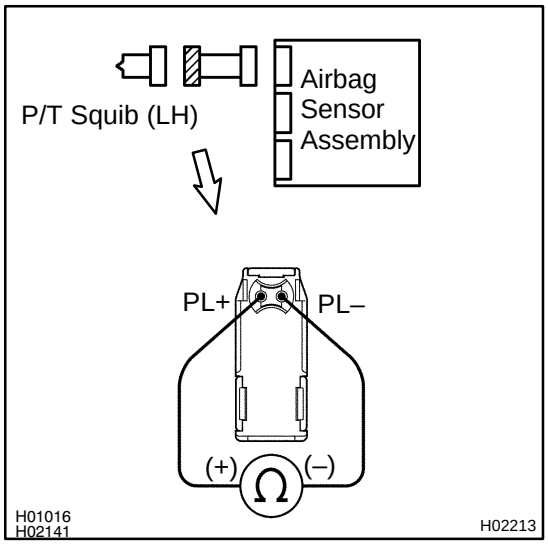

CHECK:

For the connector (on the seat belt pretensioner side) between the seat belt pretensioner (LH) and the airbag sensor assembly, measure the resistance between PL+ and PL–.

OK:

Resistance: Below 1 Ω

NG → **Repair or replace harness or connector between seat belt pretensioner (LH) and airbag sensor assembly.**

OK

3	Check airbag sensor assembly.

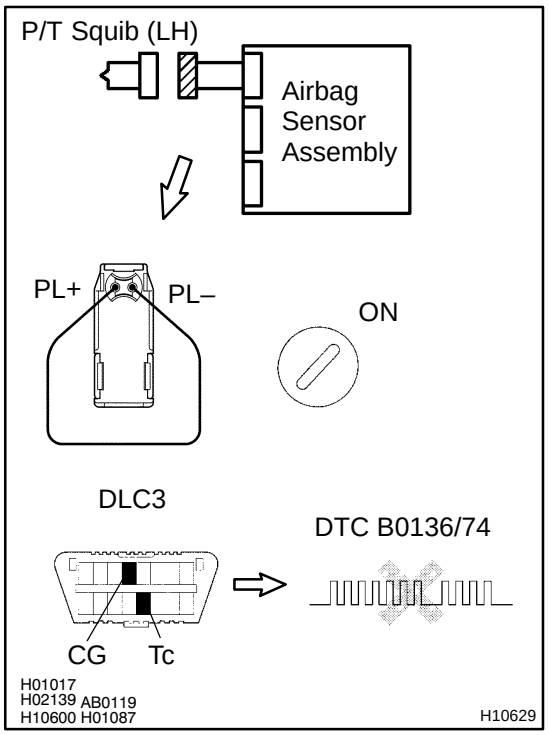

PREPARATION:

(a) Connect the connector to the airbag sensor assembly.
(b) Using a service wire, connect PL+ and PL– of the connector (on the seat belt pretensioner side) between the seat belt pretensioner (LH) and the airbag sensor assembly.
(c) Connect negative (–) terminal cable to the battery, and wait at least for 2 seconds.

CHECK:

(a) Turn ignition switch to ON and wait at least for 20 seconds.
(b) Clear DTC stored in memory.
(See page DI–588)
(c) Turn ignition switch to LOCK, and wait at least for 20 seconds.
(d) Turn ignition switch to ON, and wait at least for 20 seconds.
(e) Check DTC.
(See page DI–588)

OK:

DTC B0136/74 is not output.

HINT:
Codes other than code B0136/74 may be output at this time, but they are not relevant to this check.

NG → **Replace airbag sensor assembly.**

OK

4	Check P/T squib (LH).

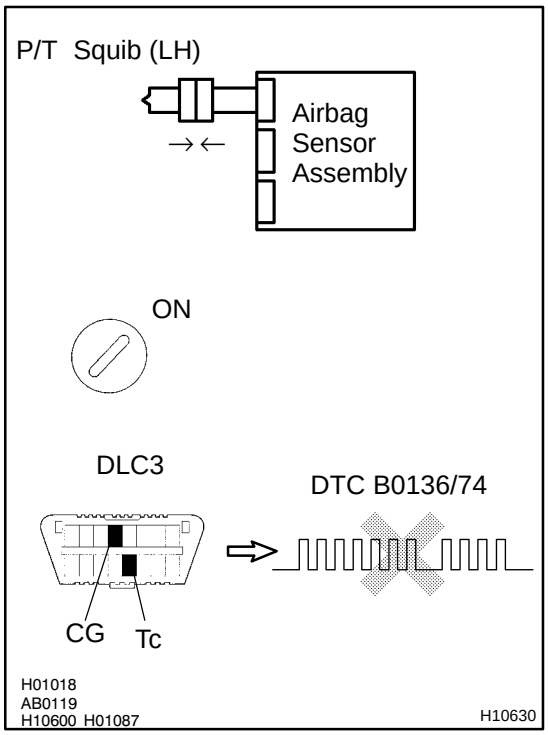

PREPARATION:

(a) Turn ignition switch to LOCK.
(b) Disconnect negative (–) terminal cable from the battery, and wait at least for 90 seconds.
(c) Connect the seat belt pretensioner (LH) connector.
(d) Connect negative (–) terminal cable to the battery, and wait at least for 2 seconds.

CHECK:

(a) Turn ignition switch to ON, and wait at least for 20 seconds.
(b) Clear DTC stored in memory.
(See page DI–588)
(c) Turn ignition switch to LOCK, and wait at least for 20 seconds.
(d) Turn ignition switch to ON, and wait at least for 20 seconds.
(e) Check DTC.
(See page DI–588)

OK:

DTC B0136/74 is not output.

HINT:
Codes other than code B0136/74 may be output at this time, but they are not relevant to this check.

NG → **Replace seat belt pretensioner (LH).**

OK

From the results of the above inspection, the malfunctioning part can now be considered normal. To make sure of this, use the simulation method to check.

DI55J–03

DTC	B0137/71	Short in P/T Squib (LH) Circuit (to Ground)

CIRCUIT DESCRIPTION

The P/T squib (LH) circuit consists of the airbag sensor assembly and seat belt pretensioner (LH).
It causes the SRS to deploy when the SRS deployment conditions are satisfied.
For details of the function of each component, see OPERATION on page RS–2.
DTC B0137/71 is recorded when a ground short is detected in the P/T squib (LH) circuit.

DTC No.	DTC Detecting Condition	Trouble Area
B0137/71	• Short circuit in P/T squib (LH) wire harness (to ground) • P/T squib (LH) malfunction • Airbag sensor assembly malfunction	• Seat belt pretensioner (LH) • Airbag sensor assembly • Wire harness

WIRING DIAGRAM

See page DI–646.

INSPECTION PROCEDURE

1	**Prepare for inspection. (See step 1 on page DI–675)**

2	**Check P/T squib (LH) circuit.**

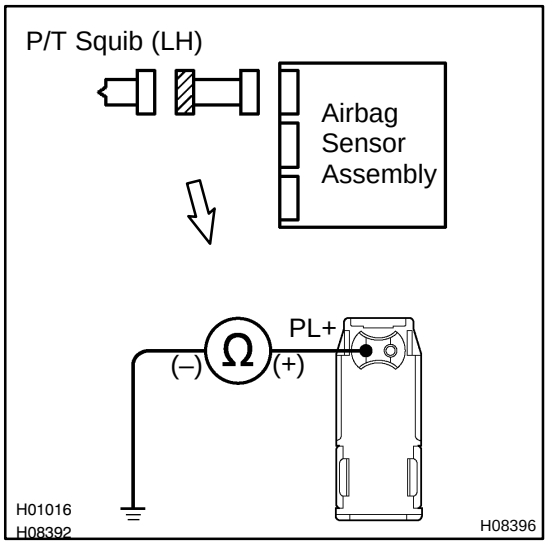

CHECK:

For the connector (on the seat belt pretensioner side) between the seat belt pretensioner (LH) and the airbag sensor assembly, measure the resistance between PL+ and body ground.

OK:

Resistance: 1 MΩ or Higher

NG → **Repair or replace harness or connector between seat belt pretensioner (LH) and airbag sensor assembly.**

OK

3	Check airbag sensor assembly.

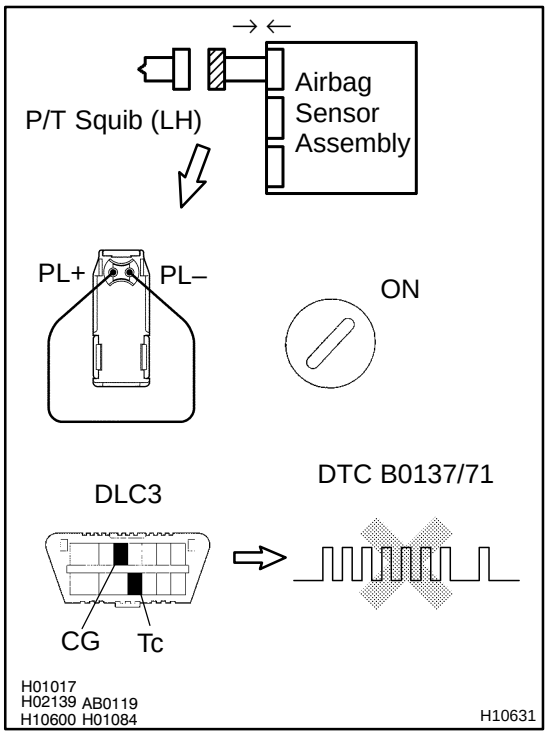

PREPARATION:

(a) Connect the connector to the airbag sensor assembly.
(b) Using a service wire, connect PL+ and PL– of the connector (on the seat belt pretensioner side) between the seat belt pretensioner (LH) and the airbag sensor assembly.
(c) Connect negative (–) terminal cable to the battery, and wait at least for 2 seconds.

CHECK:

(a) Turn ignition switch to ON and wait at least for 20 seconds.
(b) Clear DTC stored in memory.
(See step 5 on page DI–588)
(c) Turn ignition switch to LOCK, and wait at least for 20 seconds.
(d) Turn ignition switch to ON, and wait at least for 20 seconds.
(e) Check DTC.
(See page DI–588)

OK:

DTC B0137/71 is not output.

HINT:
Codes other than code B0137/71 may be output at this time, but they are not relevant to this check.

NG	Replace airbag sensor assembly.

OK

4	Check P/T squib (LH).

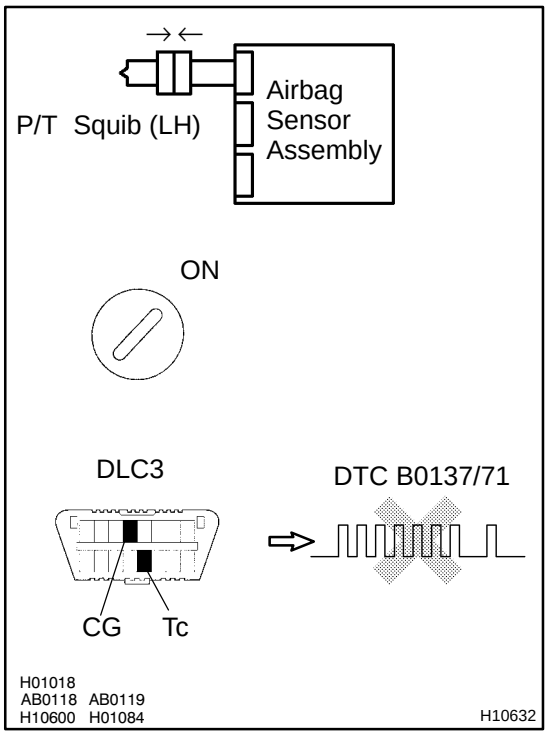

PREPARATION:

(a) Turn ignition switch to LOCK.
(b) Disconnect negative (–) terminal cable from the battery, and wait at least for 90 seconds.
(c) Connect the seat belt pretensioner (LH) connector.
(d) Connect negative (–) terminal cable to the battery, and wait at least for 2 seconds.

CHECK:

(a) Turn ignition switch to ON, and wait at least for 20 seconds.
(b) Clear DTC stored in memory.
(See step 5 on page DI–588)
(c) Turn ignition switch to LOCK, and wait at least for 20 seconds.
(d) Turn ignition switch to ON, and wait at least for 20 seconds.
(e) Check DTC.
(See page DI–588)

OK:

DTC B0137/71 is not output.

HINT:
Codes other than code B0137/71 may be output at this time, but they are not relevant to this check.

NG → **Replace seat belt pretensioner (LH).**

OK

From the results of the above inspection, the malfunctioning part can now be considered normal. To make sure of this, use the simulation method to check. If the malfunctioning part can not be detected by the simulation method, replace all SRS components including the wire harness.

DI55K–03

DTC	B0138/72	Short in P/T Squib (LH) Circuit (to B+)

CIRCUIT DESCRIPTION

The P/T squib (LH) circuit consists of the airbag sensor assembly and seat belt pretensioner (LH).
It causes the SRS to deploy when the SRS deployment conditions are satisfied.
For details of the function of each component, see OPERATION on page RS–2.
DTC B0138/72 is recorded when a B+ short is detected in the P/T squib (LH) circuit.

DTC No.	DTC Detecting Condition	Trouble Area
B0138/72	• Short circuit in seat belt pretensioner (LH) wire harness (to B+) • P/T squib (LH) malfunction • Airbag sensor assembly malfunction	• Seat belt pretensioner (LH) • Airbag sensor assembly • Wire harness

WIRING DIAGRAM

See page DI–646.

INSPECTION PROCEDURE

1	**Prepare for inspection. (See step 1 on page DI–675)**

2	**Check P/T squib (LH) circuit.**

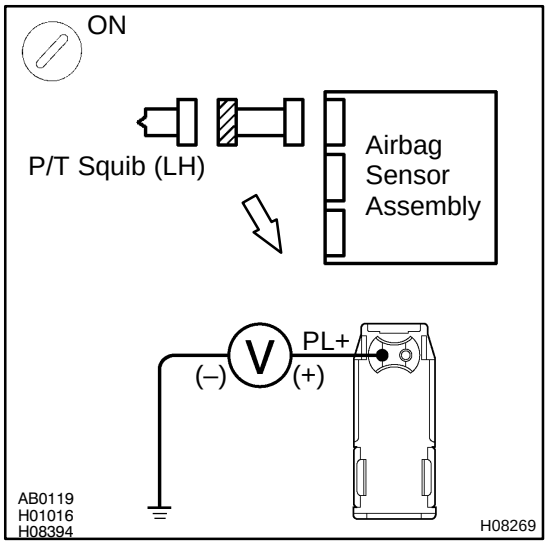

CHECK:

(a) Turn ignition switch to ON.

(b) For the connector (on the seat belt pretensioner side) between the seat belt pretensioner (LH) and the airbag sensor assembly, measure the voltage between PL+ and body ground.

OK:

Voltage: 0 V

NG → **Repair or replace harness or connector between seat belt pretensioner (LH) and airbag sensor assembly.**

OK

3	Check airbag sensor assembly.

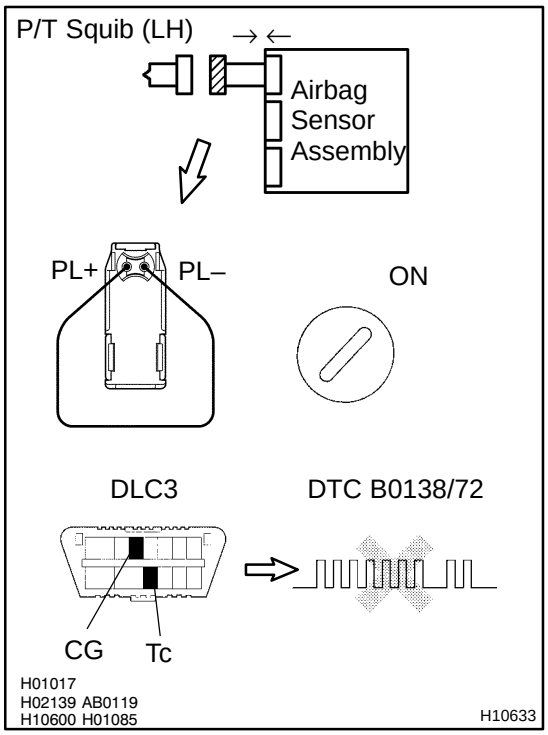

PREPARATION:

(a) Connect the connector to the airbag sensor assembly.
(b) Using a service wire, connect PL+ and PL– of the connector (on the seat belt pretensioner side) between the seat belt pretensioner (LH) and the airbag sensor assembly.
(c) Connect negative (–) terminal cable to the battery, and wait at least for 2 seconds.

CHECK:

(a) Turn ignition switch to ON and wait at least for 20 seconds.
(b) Clear DTC stored in memory.
(See step 5 on page DI–588)
(c) Turn ignition switch to LOCK, and wait at least for 20 seconds.
(d) Turn ignition switch to ON, and wait at least for 20 seconds.
(e) Check DTC.
(See page DI–588)

OK:

DTC B0138/72 is not output.

HINT:
Codes other than code B0138/72 may be output at this time, but they are not relevant to this check.

NG → **Replace airbag sensor assembly.**

OK

4	Check P/T squib (LH).

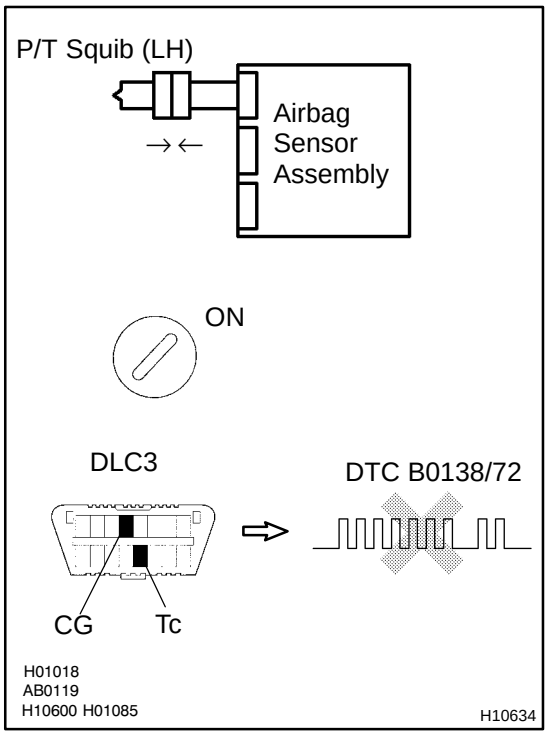

PREPARATION:

(a) Turn ignition switch to LOCK.
(b) Disconnect negative (–) terminal cable from the battery, and wait at least for 90 seconds.
(c) Connect the seat belt pretensioner (LH) connector.
(d) Connect negative (–) terminal cable to the battery, and wait at least for 2 seconds.

CHECK:

(a) Turn ignition switch to ON, and wait at least for 20 seconds.
(b) Clear DTC stored in memory.
(See step 5 on page DI–588)
(c) Turn ignition switch to LOCK, and wait at least for 20 seconds.
(d) Turn ignition switch to ON, and wait at least for 20 seconds.
(e) Check DTC.
(See page DI–588)

OK:

DTC B0138/72 is not output.

HINT:
Codes other than code B0138/72 may be output at this time, but they are not relevant to this check.

NG → **Replace seat belt pretensioner (LH).**

OK

From the results of the above inspection, the malfunctioning part can now be considered normal. To make sure of this, use the simulation method to check. If the malfunctioning part can not be detected by the simulation method, replace all SRS components including the wire harness.

SRS Warning Light Circuit Malfunction (Does not light up, when ignition switch is turned to ON.)

CIRCUIT DESCRIPTION

The SRS warning light is located on the combination meter.
When the SRS is normal, the SRS warning light lights up for approx. 6 seconds after the ignition switch is turned from LOCK position to ON position, and then turns OFF automatically.
If there is a malfunction in the SRS, the SRS warning light lights up to inform the driver of the abnormality.
When terminals Tc and CG of the DLC3 are connected, the DTC is displayed by blinking the SRS warning light.

WIRING DIAGRAM

See page DI–678.

INSPECTION PROCEDURE

1	**Check ECU–B Fuse.**

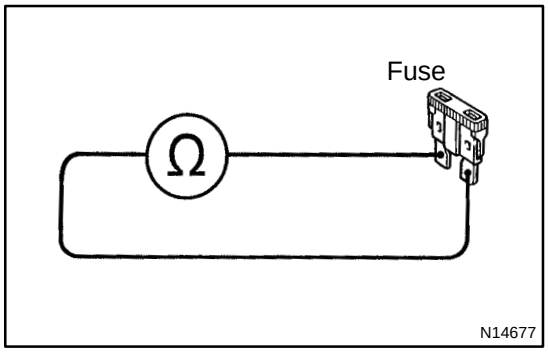

PREPARATION:
Remove ECU–B fuse.
CHECK:
Check continuity of ECU–B fuse.
OK:

Continuity

HINT:

- Fuse may be burnt out even if it appears to be OK during visual inspection.
- If fuse is OK, install it.

NG → **Go to step 5.**

OK

2	**Prepare for inspection. (See step 1 on page DI–675)**

3	Check SRS warning light circuit.

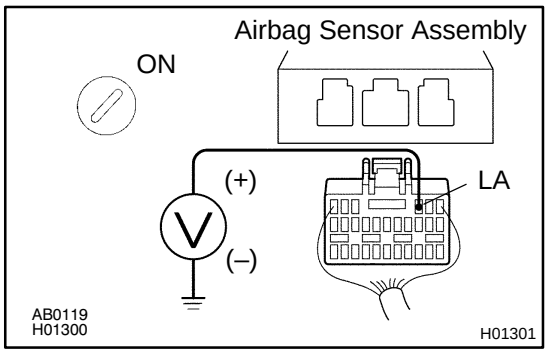

PREPARATION:

(a) Connect negative (–) terminal cable to the battery.

(b) Turn ignition switch to ON.

CHECK:

Measure the voltage between LA terminal of the harness side connector and body ground.

OK:

Voltage: 0 V

SRS warning light: Light up

NG → **Check SRS warning light bulb or repair SRS warning light circuit.**

OK

4	Does SRS warning light come on?

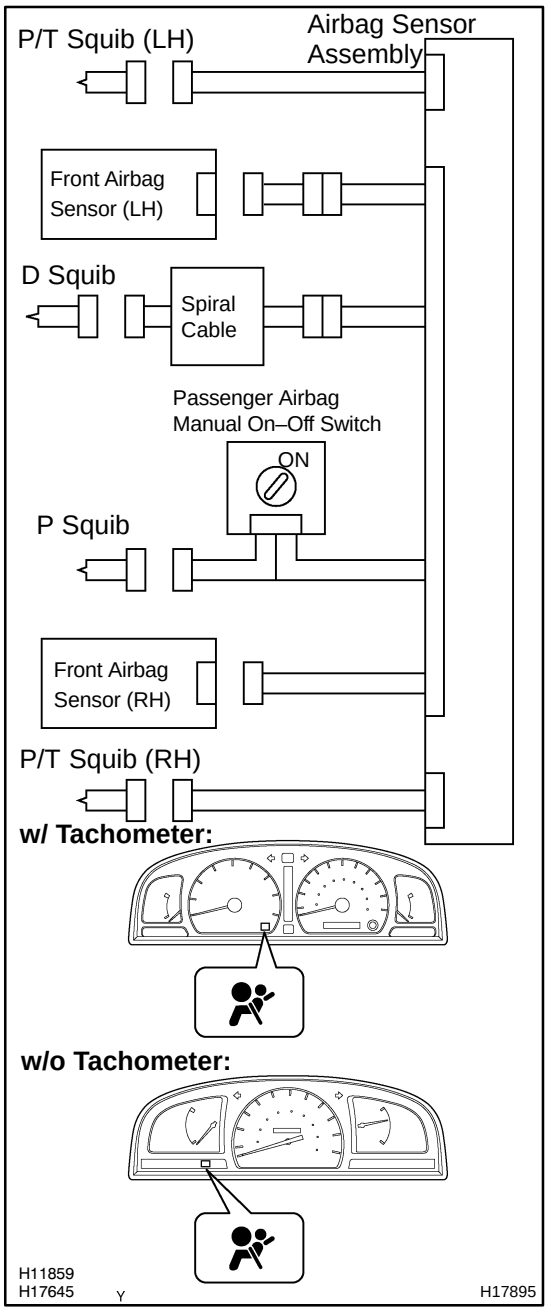

PREPARATION:

(a) Disconnect negative (–) terminal cable from the battery.
(b) Connect the airbag sensor assembly connector.
(c) Connect negative (–) terminal cable to the battery, and wait at least for 2 seconds.
(d) Turn ignition switch to ON.

CHECK:

Check operation of SRS warning light.

NO → **Check terminal LA of airbag sensor assembly. If normal, replace airbag sensor assembly.**

YES

From the results of the above inspection, the malfunctioning part can now be considered normal. To make sure of this, use simulation method to check.

5	**Is new SRS fuse burnt out again?**

NO → **Using simulation method, reproduce malfunction symptoms. (See page IN–18)**

YES

Check harness between SRS fuse and SRS warning light.

DI18Z–37

DTC	Normal	Source Voltage Drop

CIRCUIT DESCRIPTION

The SRS is equipped with a voltage–increase circuit (DC–DC converter) in the airbag sensor assembly in case the source voltage drops.
When the battery voltage drops, the voltage–increase circuit (DC–DC converter) functions to increase the voltage of the SRS to normal voltage.
The diagnosis system malfunction display for this circuit is different from other circuits that is when the SRS warning light remains lit up and the DTC is a normal code, source voltage drop is indicated.
Malfunction in this circuit is not recorded in the airbag sensor assembly, and the source voltage returns to normal, the SRS warning light automatically goes off.

DTC No.	Diagnosis
(Normal)	Source voltage drop

WIRING DIAGRAM

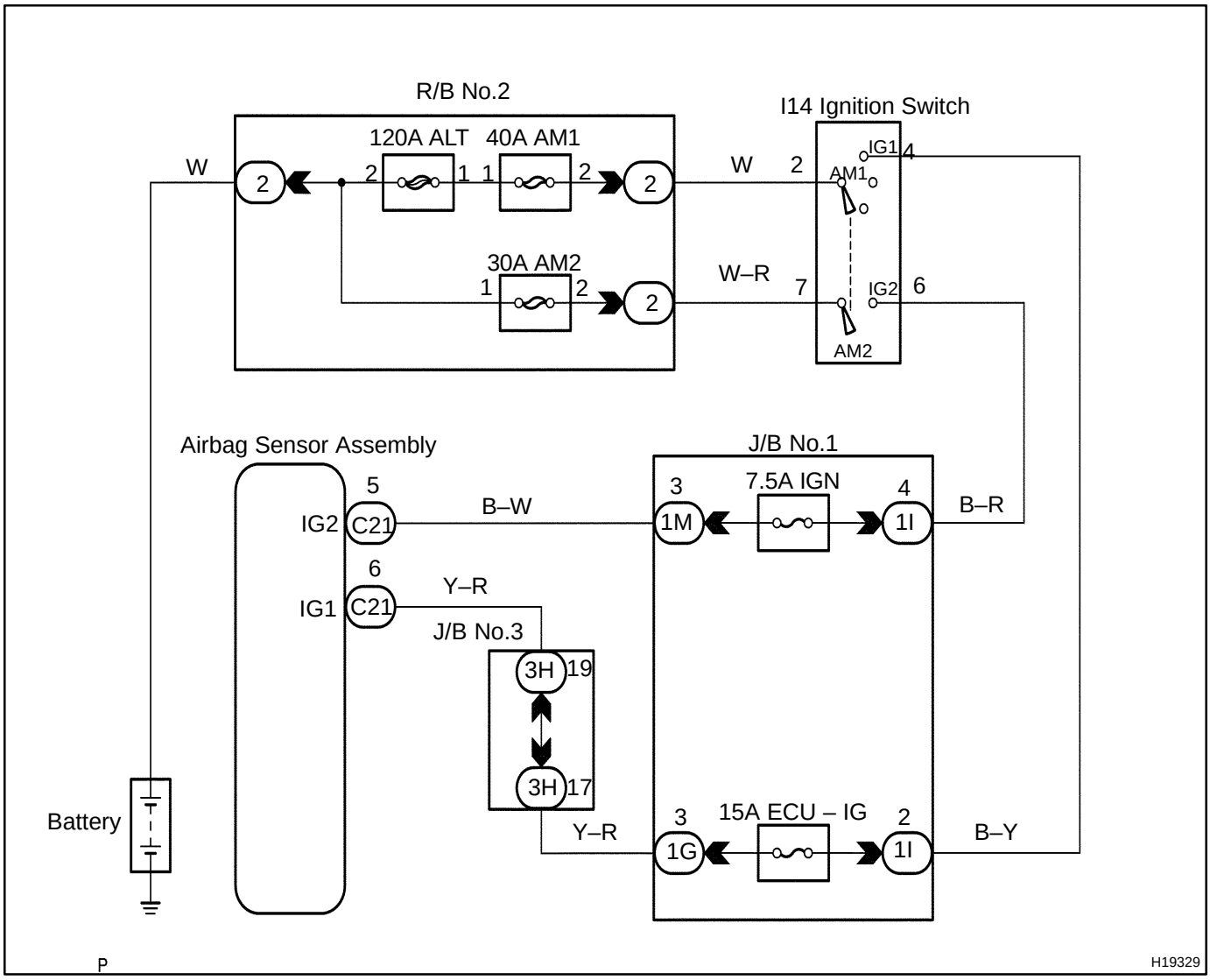

INSPECTION PROCEDURE

1	**Prepair for inspection.**

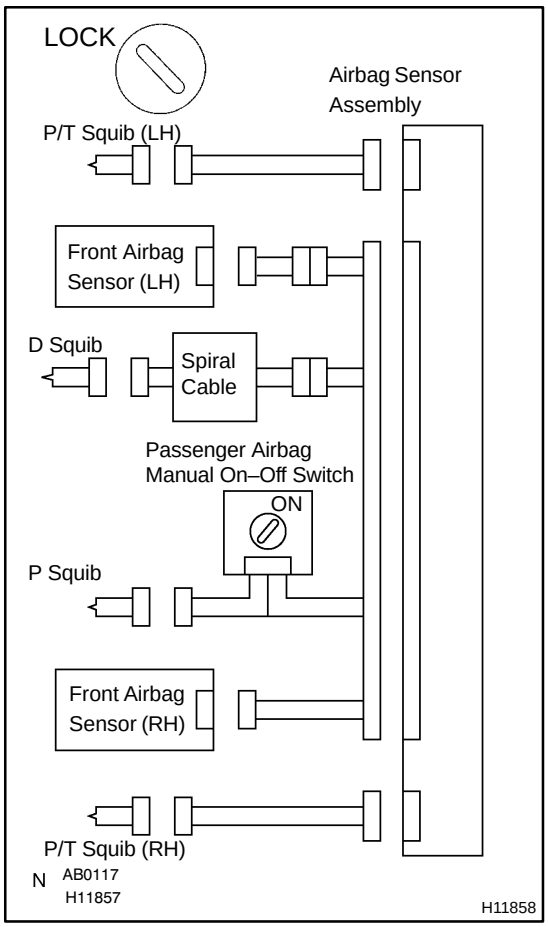

PREPARATION:

(a) Disconnect negative (–) terminal cable from the battery, and wait at least for 90 seconds.

(b) Remove the steering wheel pad. (See page SR–14)

(c) Disconnect the connector of the front passenger airbag assembly. (See page RS–25)

(d) Disconnect the connector of the airbag sensor assembly. (See page RS–37)

(e) Disconnect the connector of the seat belt pretensioner RH and LH. (See page BO–108)

(f) Disconnect the connector of the front airbag sensor RH and LH. (See page RS–42)

CAUTION:

Store the steering wheel pad with the front surface facing upward.

2	Check source voltage.

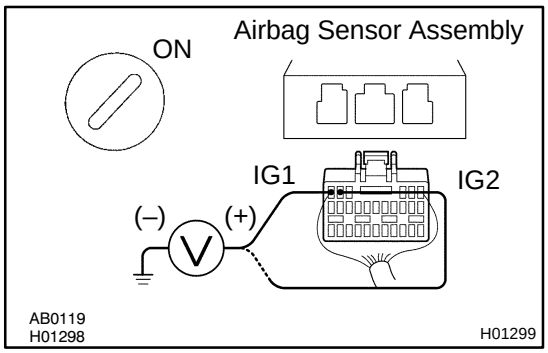

PREPARATION:

(a) Connect negative (–) terminal cable to the battery.
(b) Turn ignition switch ON.

CHECK:

Operating the electric system (defogger, wiper, headlight, heater, blower, etc.), measure the voltage between each of IG1 and IG2 of the sensor and body ground.

OK:

Voltage: 10 – 14 V

NG → **Check harness between battery and airbag sensor assembly, and check battery and charging system.**

OK

3	Does SRS warning light turn OFF?

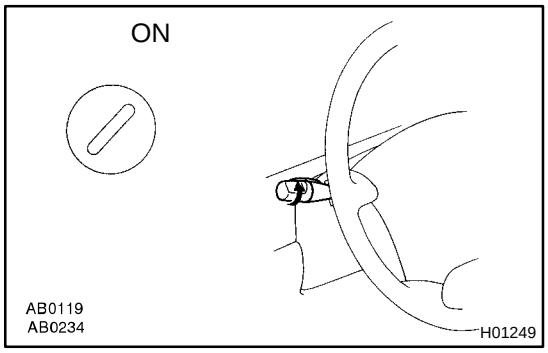

PREPARATION:

(a) Turn ignition switch to LOCK.
(b) Connect the steering wheel pad connector.
(c) Connect the front passenger airbag assembly connector.
(d) Connect the airbag sensor assembly connector.
(e) Connect the seat belt pretensioner connector.
(f) Connect the front airbag sensor connector.
(g) Turn ignition switch ON.

CHECK:

Operate electric system (defogger, wiper, headlight, heater blower, etc.) and check that SRS warning light goes off.

NO → **Check for DTCs. If a DTC is output, perform troubleshooting for the DTC. If a normal code is output, replace airbag sensor assembly.**

YES

From the results of the above inspection, the malfunctioning part can now be considered normal. To make sure of this, use the simulation method to check.

DI192–36

Tc Terminal Circuit

CIRCUIT DESCRIPTION

By connecting terminals Tc and CG of the DLC3 the airbag sensor assembly is set in the DTC output mode. The DTCs are displayed by blinking the SRS warning light.

WIRING DIAGRAM

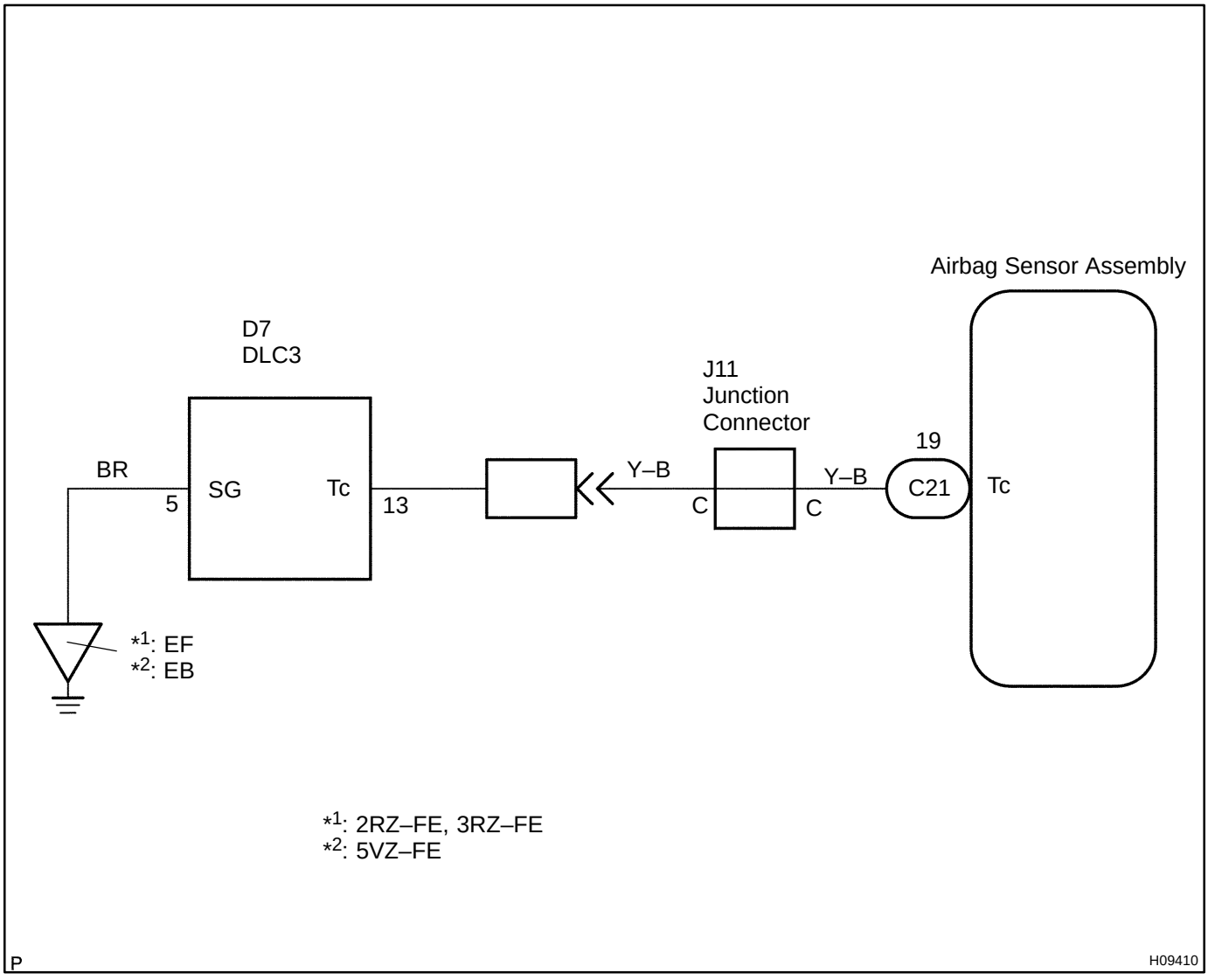

INSPECTION PROCEDURE
If the DTC is not displayed, do the following troubleshooting.

1	**Does SRS warning light light up for approx. 6 seconds?**

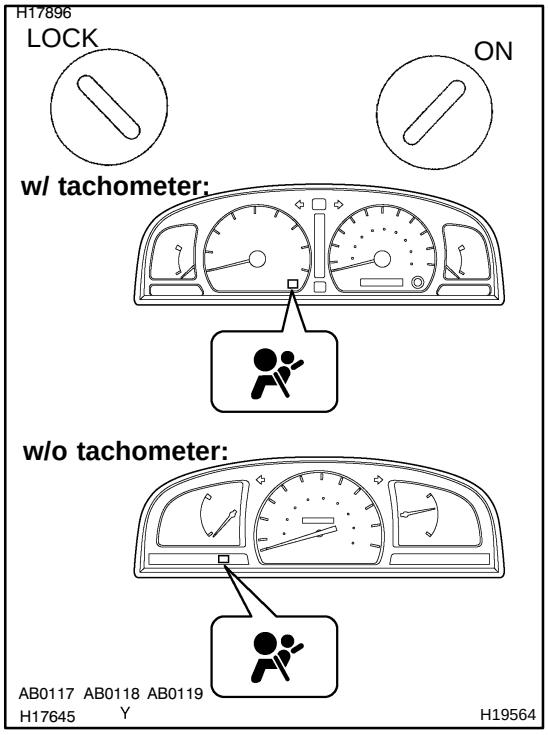

PREPARATION:.0

Check operation of the SRS warning light after ignition switch is turned from LOCK position to or ON position.

NO → **Check SRS warning light system. (See page DI–588)**

YES

2	**Check voltage between terminals Tc and CG of DLC3.**

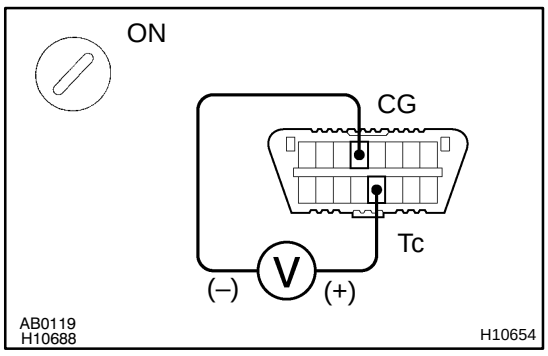

PREPARATION:

Turn ignition switch to ON.

CHECK:

Measure the voltage between terminalsTc and CG of The DLC3.

OK:

Voltage: 10 – 14 V

OK → **Go to step 4.**

NG

3	Check voltage between terminal Tc of DLC3 and body ground.

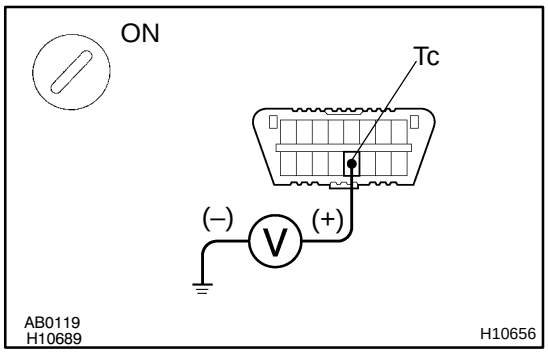

CHECK:

Measure the voltage between terminal Tc of DLC3 and body ground.

OK:

Voltage: 10 – 14 V

OK	Check harness between terminal CG of DLC3 and body ground.

NG

4	Check airbag sensor assembly.

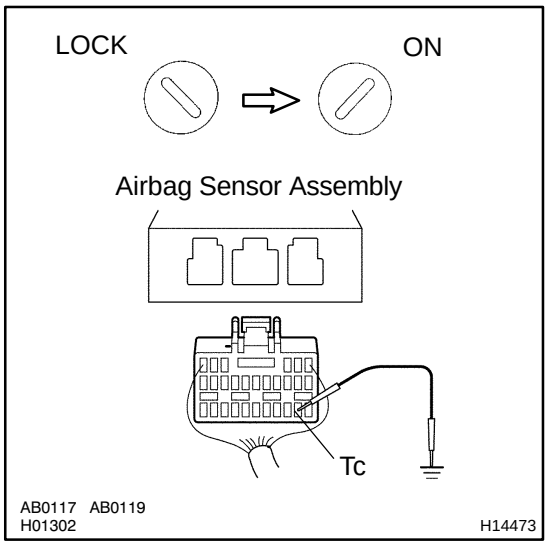

PREPARATION:

(a) Turn ignition switch to LOCK.
(b) Disconnect negative (–) terminal cable from the battery, and wait at least for 90 seconds.
(c) Disconnect the airbag sensor assembly connector.
(d) Insert service wire into terminal Tc from back side as shown in the illustration.
(e) Connect the airbag sensor assembly connector with service wire.
(f) Connect negative (–) terminal cable to the battery.
(g) Turn ignition switch to ON and wait at least for 20 seconds.
(h) Connect service wire of terminal Tc to body ground.

CHECK:

Check operation of SRS warning light.

OK:

SRS waning light comes on.

NOTICE:

Pay due attention to the terminal connecting position to above a malfunction.

OK → **Check harness between the airbag sensor assembly and DLC3.**

NG

Replace airbag sensor assembly.

If the DTC is displayed without a DTC check procedure, perform the following troubleshooting.

1	**Check resistance between terminal Tc of airbag sensor assembly and body ground.**

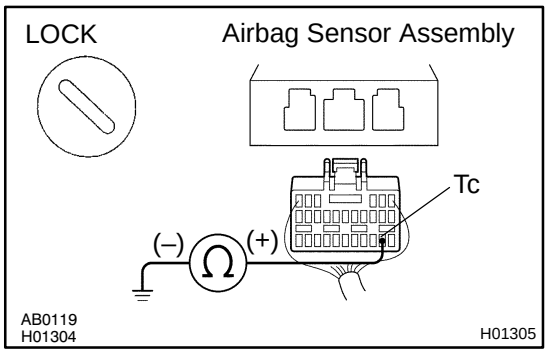

PREPARATION:

(a) Turn ignition switch to LOCK.
(b) Disconnect negative (–) terminal cable from the battery, and wait at least for 90 seconds.
(c) Disconnect the airbag sensor assembly connector.

CHECK:

Check the resistance between terminal Tc of the airbag sensor assembly connector and body ground.

OK:

Resistance: 1 MΩ or Higher

NG → **Repair or replace harness or connector.**

OK

Replace airbag sensor assembly.

DI18K–05

CUSTOMER PROBLEM ANALYSIS CHECK

Supplemental Restraint System Check Sheet

Inspector's Name _____

Customer's Name		**Registration No.**	
		Registration Year	/ /
		Frame No.	
Date Vehicle Brought In	/ /	**Odometer Reading**	**km Miles**

Date Problem Occurred	/ /
Weather	☐ Fine ☐ Cloudy ☐ Rainy ☐ Snowy ☐ Other
Temperature	**Approx.**

Vehicle Operation	☐ Starting ☐ Idling ☐ Driving [☐ Constant speed ☐ Acceleration ☐ Deceleration ☐ Other]
Road Conditions	
Details Of Problem	

Vehicle Inspection, Repair History Prior to Occurrence of Malfunction (Including Supplemental Restraint System)	

Diagnosis System Inspection

SRS Warning Light Inspection	**1st Time**	☐ Remains ON ☐ Sometimes Lights Up ☐ Does Not Light Up
	2nd Time	☐ Remains ON ☐ Sometimes Lights Up ☐ Does Not Light Up
DTC Inspection	**1st Time**	☐ Normal Code ☐ Malfunction Code [Code.]
	2nd Time	☐ Normal Code ☐ Malfunction Code [Code.]

DI18M–03

DIAGNOSTIC TROUBLE CODE CHART

If a malfunction code is displayed during the DTC check, check the circuit listed for that code in the table below (Proceed to the page given for that circuit.).

DTC No. (See Page)	Detection Item	Trouble Area	SRS Warning Light
B0100/13 (DI–599)	• Short in D squib circuit	• Steering wheel pad (squib) • Spiral cable • Airbag sensor assembly • Wire harness	ON
B0101/14 (DI–604)	• Open in D squib circuit	• Steering wheel pad (squib) • Spiral cable • Airbag sensor assembly • Wire harness	ON
B0102/11 (DI–608)	• Short in D squib circuit (to Ground)	• Steering wheel pad (Squib) • Spiral cable • Airbag sensor assembly • Wire harness	ON
B0103/12 (DI–612)	• Short in D squib circuit (to B+)	• Steering wheel pad (Squib) • Spiral cable • Airbag sensor assembly • Wire harness	ON
B0105/53 (DI–616)	• Short in P squib circuit	• Front passenger airbag assembly (squib) • Passenger airbag manual on–off switch • Airbag sensor assembly • Wire harness	ON
B0106/54 (DI–621)	• Open in P squib circuit	• Front passenger airbag assembly (squib) • Passenger airbag manual on–off switch • Airbag sensor assembly • Wire harness	ON
B0107/51 (DI–625)	• Short in P squib circuit (to Ground)	• Front passenger airbag assembly (squib) • Passenger airbag manual on–off switch • Airbag sensor assembly • Wire harness	ON
B0108/52 (DI–629)	• Short in P squib circuit (to B+)	• Front passenger airbag assembly (squib) • Passenger airbag manual on–off switch • Airbag sensor assembly • Wire harness	ON
B0130/63 (DI–633)	• Short in P/T squib (RH) circuit	• Seat belt pretensioner RH (squib) • Airbag sinsor assembly • Wire harness	Blink
B0131/64 (DI–637)	• Open in P/T squib (RH) circuit	• Seat belt pretensioner RH (squib) • Airbag sensor assembly • Wire harness	Blink
B0132/61 (DI–640)	• Short in P/T squib (RH) circuit (to Ground)	• Seat belt pretensioner RH (squib) • Airbag sensor assembly • Wire harness	Blink
B0133/62 (DI–643)	• Short in P/T squib (RH) circuit (to B+)	• Seat belt pretensioner RH (squib) • Airbag sensor assembly • Wire harness	Blink
B0135/73 (DI–646)	• Short in P/T squib (LH) circuit	• Seat belt pretensioner LH (squib) • Airbag sensor assembly • Wire harness	Blink

DTC No. (See Page)	Detection Item	Trouble Area	SRS Warning Light
B0136/74 (DI–650)	• Open in P/T squib (LH) circuit	• Seat belt pretensioner LH (squib) • Airbag sensor assembly • Wire harness	Blink
B0137/71 (DI–653)	• Short in P/T squib (LH) circuit (to Ground)	• Seat belt pretensioner LH (squib) • Airbag sensor assembly • Wire harness	Blink
B0138/72 (DI–656)	• Short in P/T squib (LH) circuit (to B+)	• Seat belt pretensioner LH (squib) • Airbag sensor assembly • Wire harness	Blink
B1100/31 (DI–659)	• Airbag sensor assembly malfunction	• Airbag sensor assembly	ON
B1156/B1157/15 (DI–661)	• Front airbag sensor assembly (RH) malfunction	• Front airbag sensor assembly (RH) • Airbag sensor assembly • Wire harness	ON
B1158/B1159/16 (DI–667)	• Front airbag sensor assembly (LH) malfunction	• Front airbag sensor assembly (LH) • Airbag sensor assembly • Wire harness • Cowl wire harness	ON
Normal (DI–675)	• System normal	–	OFF
	• Voltage source drop	• Battery • Airbag sensor assembly	ON

HINT:

- When the SRS warning light remains lit up and the DTC is the normal code, this means a voltage source drops.
  This malfunction is not stored in memory by the airbag sensor assembly and if the power source voltage returns to normal, the SRS warning light will automatically go out.
- When 2 or more codes are indicated, the codes will be displayed in numeral order starting from the lowest numbered code.
- If a code not listed on the chart is displayed, the airbag sensor assembly is faulty.

SUPPLEMENTAL RESTRAINT SYSTEM

DI18J–22

HOW TO PROCEED WITH TROUBLESHOOTING

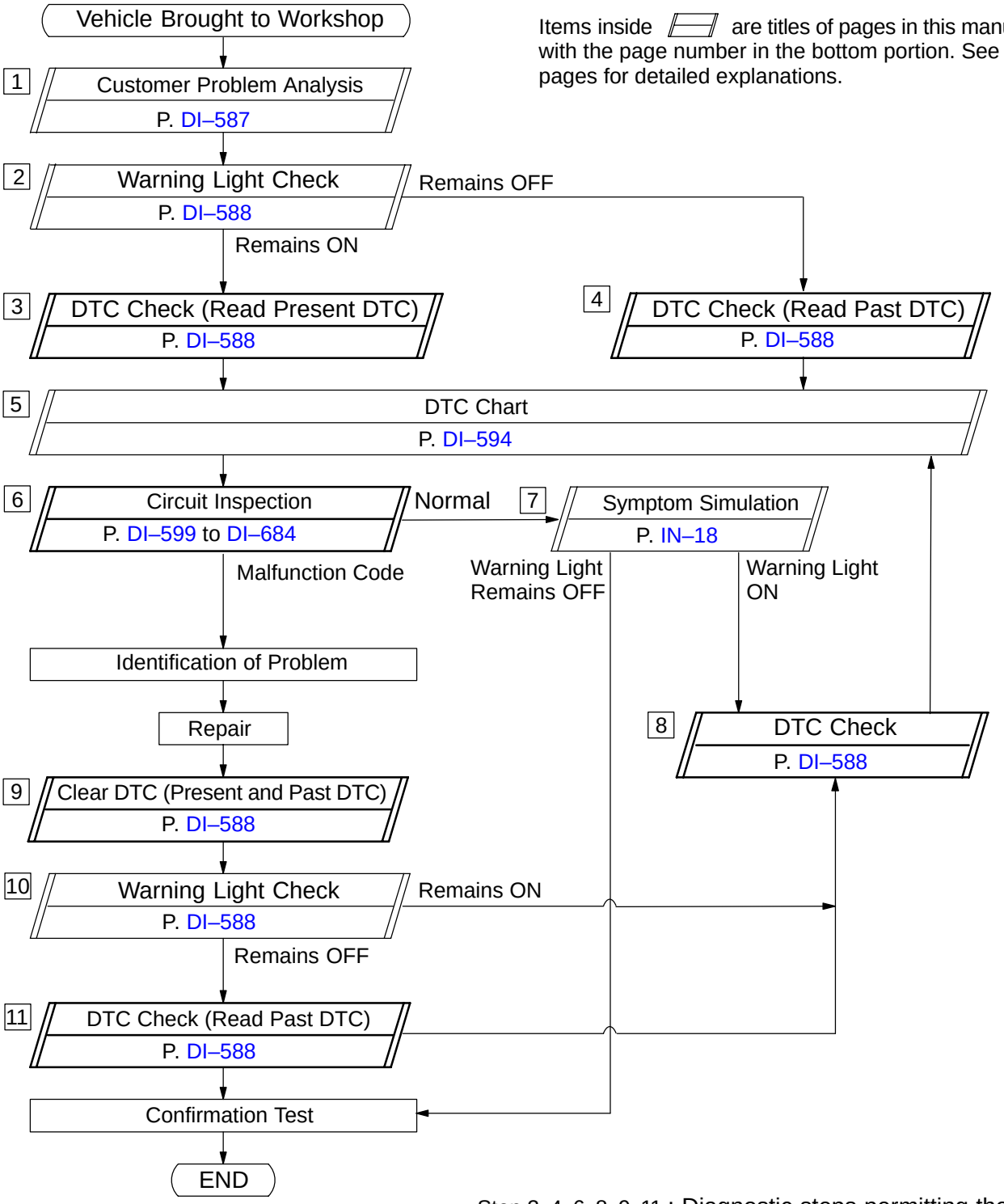

Step 3, 4, 6, 8, 9, 11 : Diagnostic steps permitting the use of the hand–held tester.

DI18N–04

PARTS LOCATION

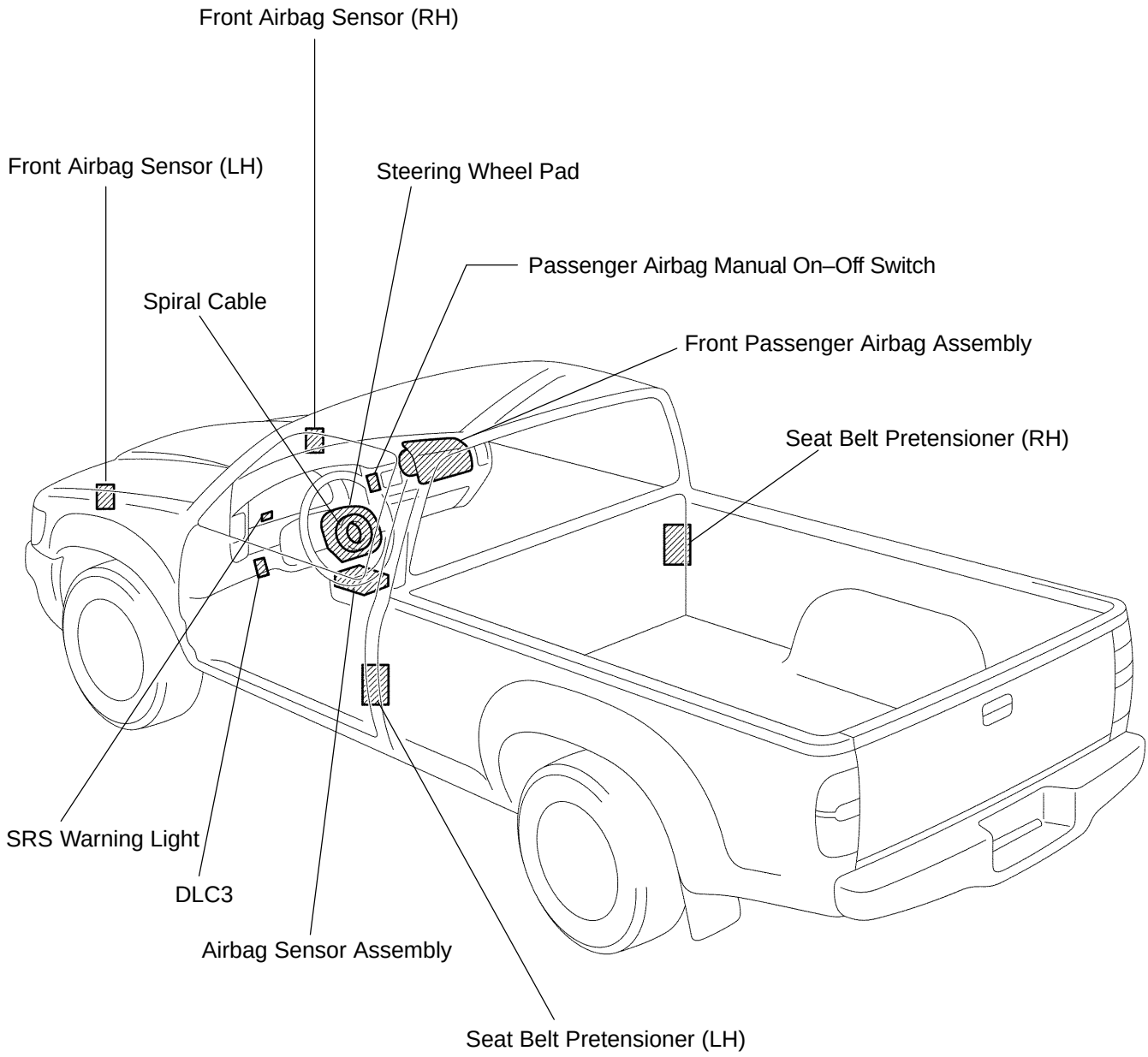

P

H19567

DI69P–03

PRE–CHECK

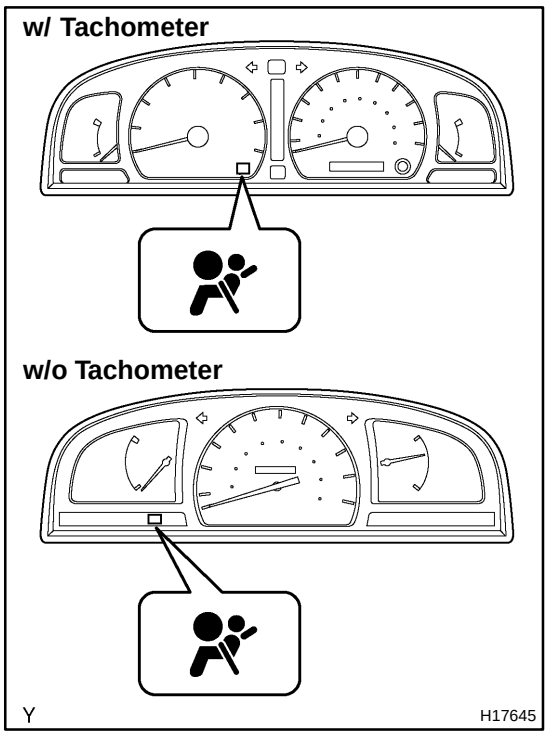

1. SRS WARNING LIGHT CHECK

(a) Turn the ignition switch to the ON position and check that the SRS warning light lights up.

(b) Check that the SRS warning light goes out after approx. 6 seconds.

HINT:

- When the ignition switch is at ON and the SRS warning light remains on or flashes, the airbag sensor assembly has detected a malfunction code.
- If, after approx. 6 seconds have elapsed, the SRS warning light sometimes lights up or the SRS warning light lights up even when the ignition switch is OFF, a short in the SRS warning light circuit can be considered likely. Proceed to "SRS warning light circuit malfunction" on page DI–678 and DI–680.

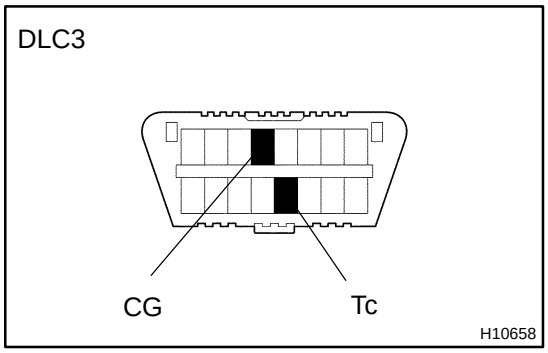

2. DTC CHECK (Using diagnosis check wire)

(a) Present troubles codes:

Output the DTC.

(1) Turn the ignition switch to the or ON position and wait for approx. 20 seconds.

(2) Using SST, connect terminals Tc and CG of the DLC3.

SST 09843–18040

NOTICE:

Pay due attention to the terminal connecting position to avoid a malfunction.

(b) Past troubles codes:

Output the DTC.

(1) Using service wire, connect terminals Tc and CG of the DLC3.

SST 09843–18040

(2) Turn the ignition switch to the ON position and wait for approx. 20 seconds.

NOTICE:

Pay due attention to the terminal connecting position to avoid a malfunction.

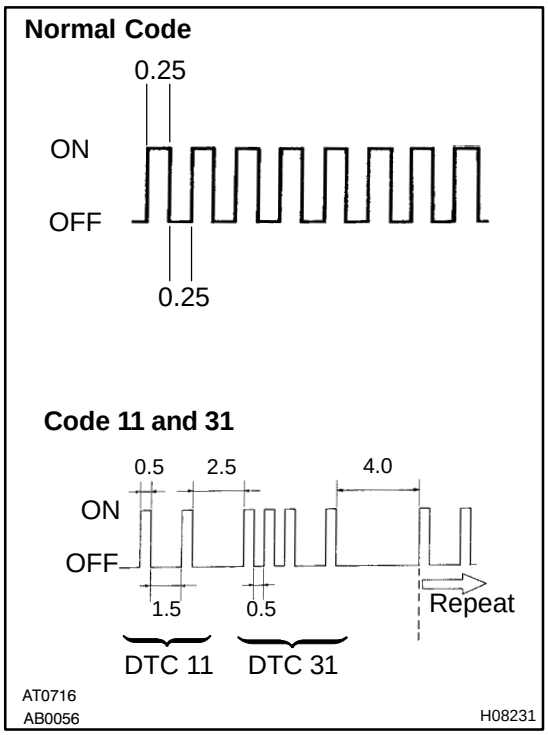

(c) Read the DTC.
Read the 2–digit DTC as indicated by the number of times the SRS warning light blinks. As an example, the blinking patterns, normal, 11 and 31 are shown in the illustration.

- Normal code indication
  The light will blink 2 times per second.
- Malfunction code indication
  The first blinking output indicates the first digit of a 2–digit DTC. After a 1.5–second pause, the second blinking output will indicate the second digit.

If there are 2 or more codes, there will be a 2.5–second pause between each code. After all the codes have been output, there will be a 4.0–second pause and they will all be repeated.
HINT:

- In the event of a number of trouble codes, indication will start from the smallest numbered code.
- If a DTC is not output or a DTC is output without terminal connection, proceed to the Tc terminal circuit inspection on page DI–684.

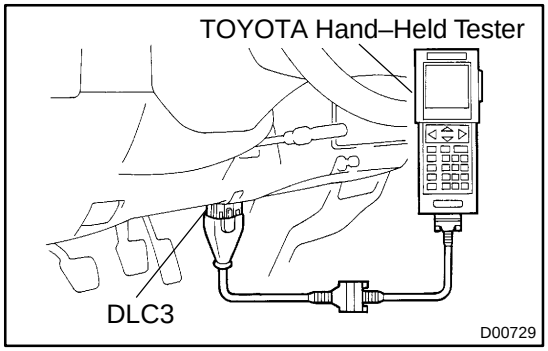

3. DTC CHECK (Using hand–held tester)

(a) Hook up the hand–held tester to the DLC3.
(b) Read the DTCs by following the prompts on the tester screen.

HINT:
Please refer to the hand–held tester operator's manual for further details.

4. DTC CLEARANCE (Not using service wire)

When the ignition switch is turned off, the diagnostic trouble code is cleared.
HINT:
DTC might not be cleared by turning the ignition switch OFF. In this case, proceed to the next step.

5. DTC CLEARANCE (Using service wire)

(a) Connect the 2 service wires to terminals Tc and AB of check connector.
(b) Turn the ignition switch to ON and wait for approx. 6 seconds.

(c) Starting with the Tc terminal, ground alternately terminal Tc and terminal AB twice each in cycles of 1.0 second. Make sure that the terminals are grounded. Ensure the terminal Tc remain grounded.

HINT:

When alternately grounding terminals Tc and AB, release ground from one terminal and immediately ground the other terminal within an interval of 0.2 seconds.

If DTCs are not cleared, repeat the above procedure until the codes are cleared.

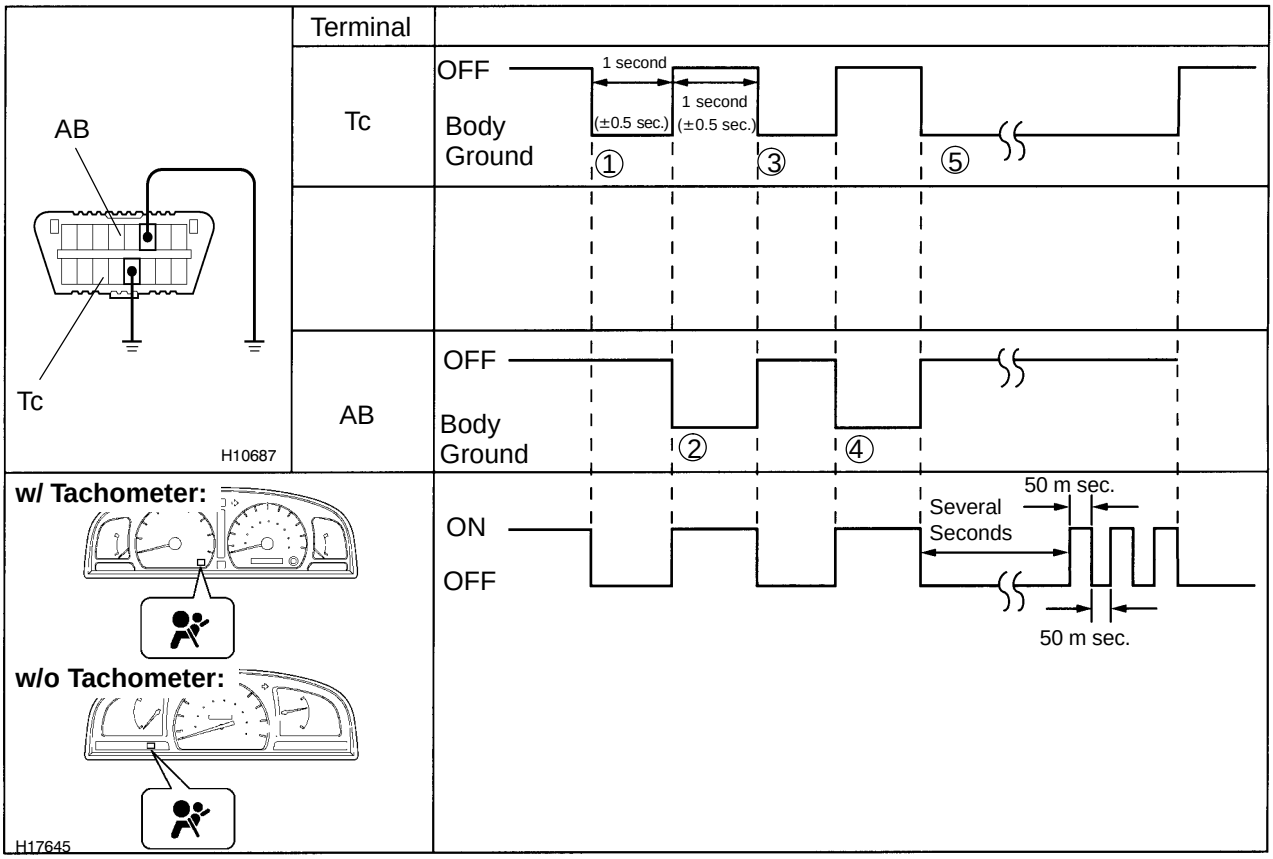

H19566

(d) Several seconds after doing the clearing procedure, the SRS warning light will blink in a 50 – m sec. cycle to indicate the codes which have been cleared.

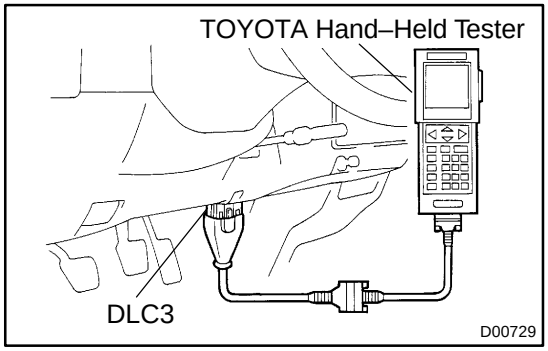

6. DTC CLEARANCE (Using hand–held tester)

(a) Hook up the hand–held tester to the DLC3.

(b) Clear the DTCs by following the prompts on the tester screen.

HINT:

Please refer to the hand–held tester operation's manual for further details.

7. RELEASE METHOD OF AIRBAG ACTIVATION PREVENTION MECHANISM

An airbag activation prevention mechanism is built into the connector for the squib circuit of the SRS.

When release of the airbag activation prevention mechanism is directed in the troubleshooting procedure, as shown in the illustration of the connectors on the next pages, insert paper which has the same thickness as the male terminal between the terminal and the short spring.

CAUTION:

Never release the airbag activation prevention mechanism on the squib connector.

NOTICE:

- **Do not release the airbag activation prevention mechanism unless specifically directed by the troubleshooting procedure.**
- **If the inserted paper is too thick the terminal and short spring may be damaged, so always use paper with the same thickness as the male terminal.**

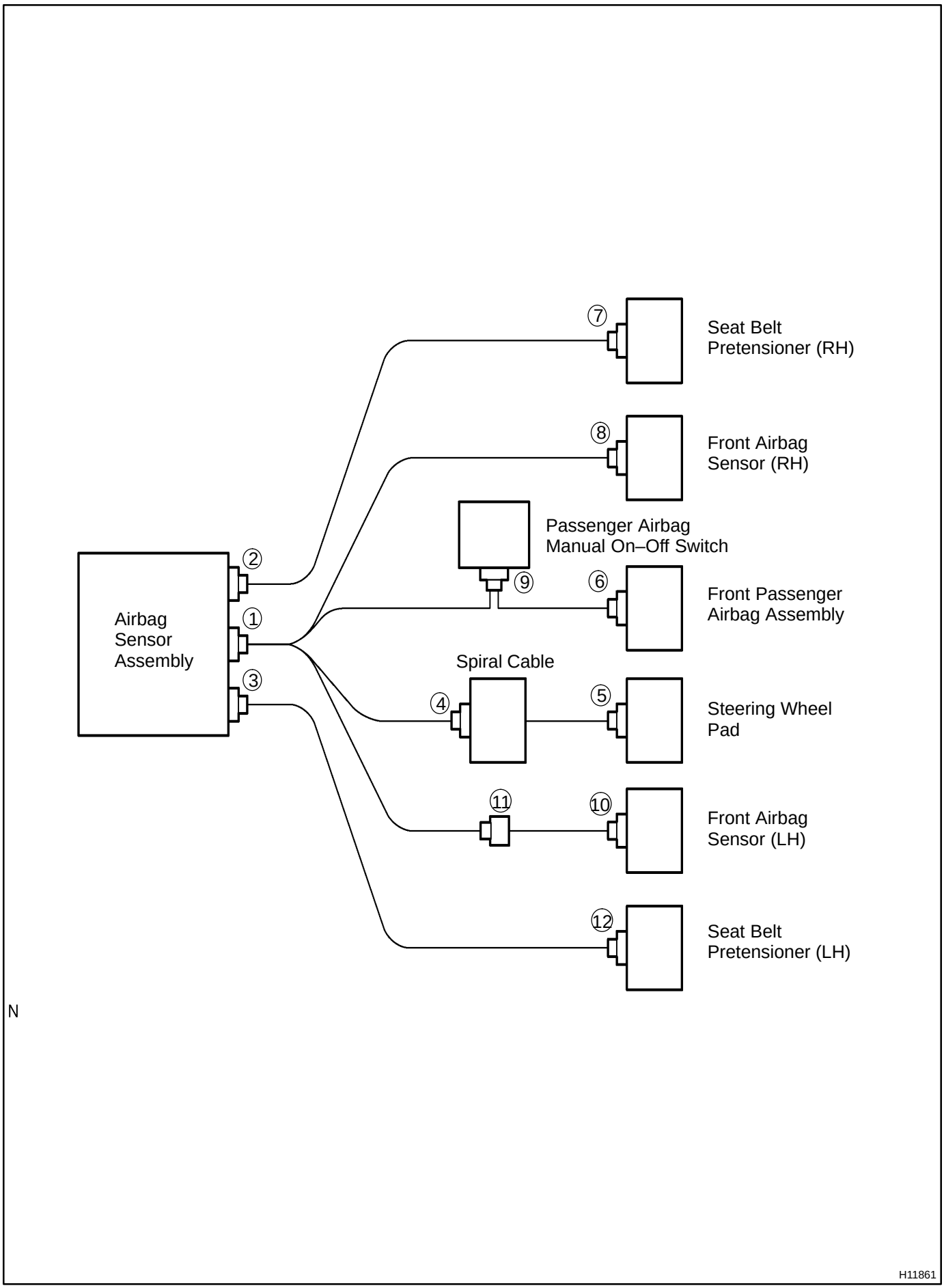
Airbag
Sensor
Assembly
2
1
3
7
Seat Belt
Pretensioner (RH)
8
Front Airbag
Sensor (RH)
Passenger Airbag
Manual On–Off Switch
9
6
Front Passenger
Airbag Assembly
Spiral Cable
4
5
Steering Wheel
Pad
11
10
Front Airbag
Sensor (LH)
12
Seat Belt
Pretensioner (LH)
H11861

N

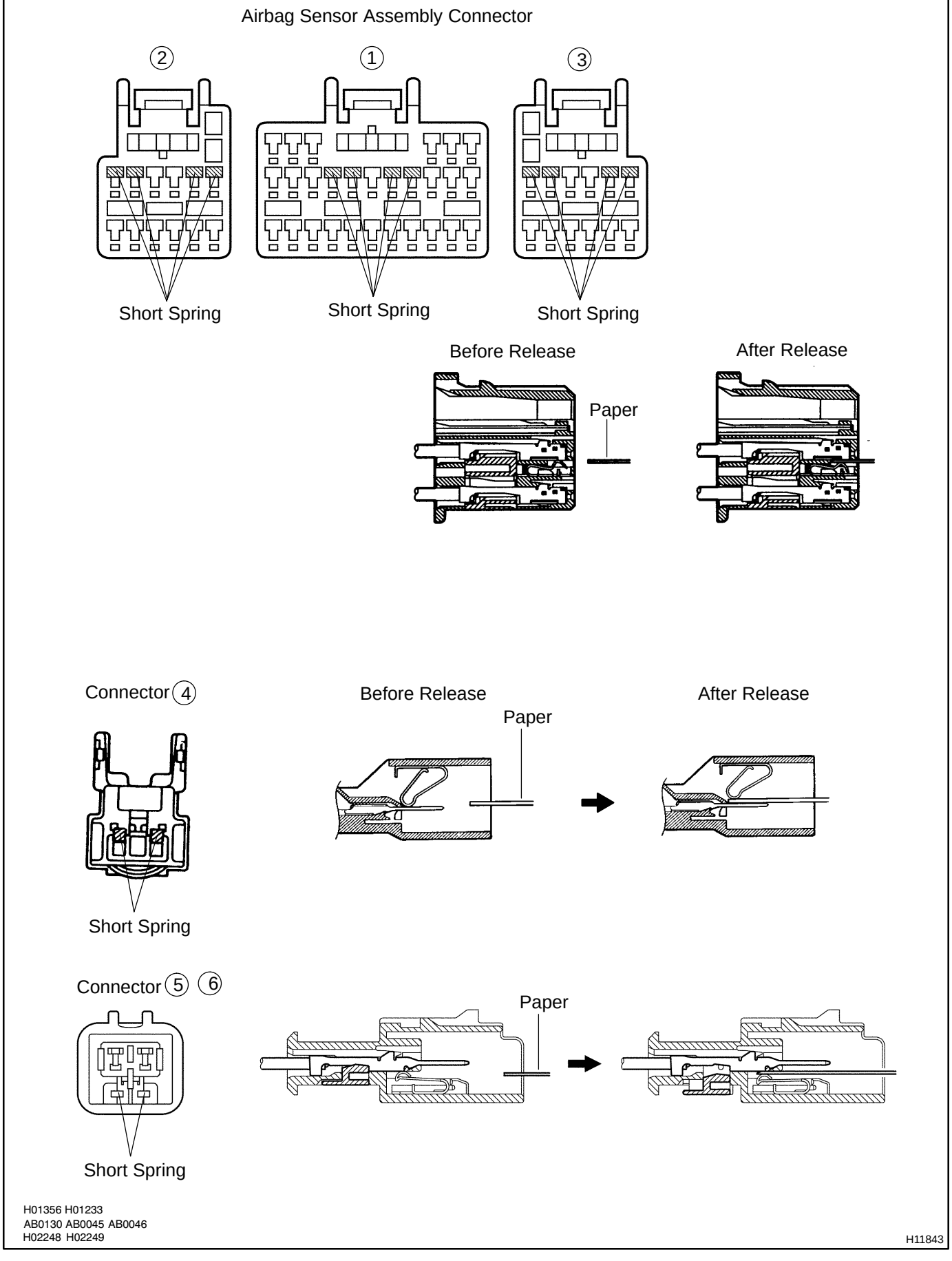

H01356 H01233
AB0130 AB0045 AB0046
H02248 H02249

H11843

DI18P–13

PROBLEM SYMPTOMS TABLE

Proceed with troubleshooting of each circuit in the table below.

Symptom	Suspect Area	See page
• With the ignition switch at ON position, the SRS warning light sometimes lights up after approx. 6 seconds have elapsed.	• SRS warning light circuit (Always lights up when ignition switch is in LOCK position.)	DI–678
• SRS warning light is always lit up even when ignition switch is in the LOCK position.		
• With the ignition switch in ON position, the SRS warning light does not light up.	• SRS warning light circuit (Does not light up when ignition switch is turned to ON.)	DI–680
• DTC is not displayed.	• Tc terminal circuit	DI–684
• SRS warning light is always lit up at the time of DTC check procedure.		
• DTC is displayed without Tc and CG terminal connection.		

DI18O–04

TERMINALS OF ECU

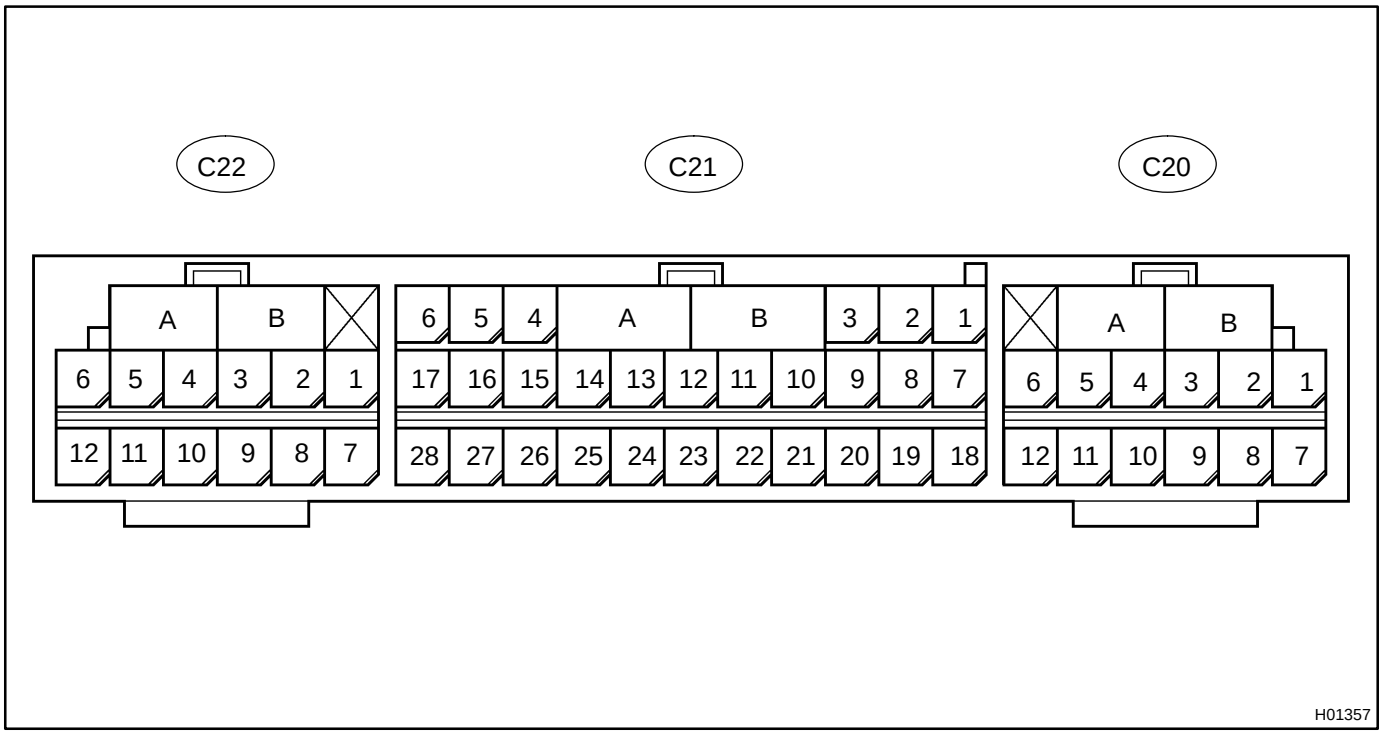

No.	Symbol	Terminal Name
A	–	Electrical Connector Check Mechanism
B	–	Electrical Connector Check Mechanism
C20 – 6	PR+	Squib (Seat belt pretensioner, RH)
C20 – 7	PR–	Squib (Seat belt pretensioner, RH)
C21 – 3	LA	SRS Warning Light
C21 – 5	IG2	Power Source
C21 – 6	IG1	Power Source
C21 – 9	SR+	Front Airbag Sensor (RH)
C21 – 10	P+	Squib (Passenger)
C21 – 11	P–	Squib (Passenger)
C21 – 12	SIL	Diagnosis
C21 – 13	D–	Squib (Driver)
C21 – 14	D+	Squib (Driver)
C21 – 15	SL+	Front Airbag Sensor (LH)
C21 – 19	Tc	Diagnosis
C21 – 20	SR–	Front Airbag Sensor (RH)
C21 – 26	SL–	Front Airbag Sensor (LH)
C21 – 27	E1	Ground
C21 – 28	E2	Ground
C22 – 1	PL–	Squib (Seat belt pretensioner, LH)
C22 – 2	PL+	Squib (Seat belt pretensioner, LH)

EMISSION CONTROL SYSTEM

EC0E0–01

PURPOSE

The emission control systems are installed to reduce the amount of CO, HC and NOx exhausted from the engine (3, 4 and 5), to prevent the atmospheric release of blow–by gas–containing HC (1) and evaporated fuel containing HC being released from the fuel tank (2).
The function of each system is shown in these table.

System	Abbreviation	Function
1. Positive Crankcase Ventilation	PCV	Reduces blow–by gas (HC)
2. Evaporative Emission Control	EVAP	Reduces evaporated HC
3. Exhaust Gas Recirculation	EGR	Reduces NOx
4. Three–Way Catalytic Converter	TWC	Reduces CO, HC and NOx
5. Sequential Multiport Fuel Injection*	SFI	Injects a precisely timed, optimum amount of fuel for reduced exhaust emissions

Remark: * For inspection and repair of the SFI system, refer to the SF section this manual.

EVAPORATIVE EMISSION (EVAP) CONTROL SYSTEM

EC0LX–01

COMPONENTS

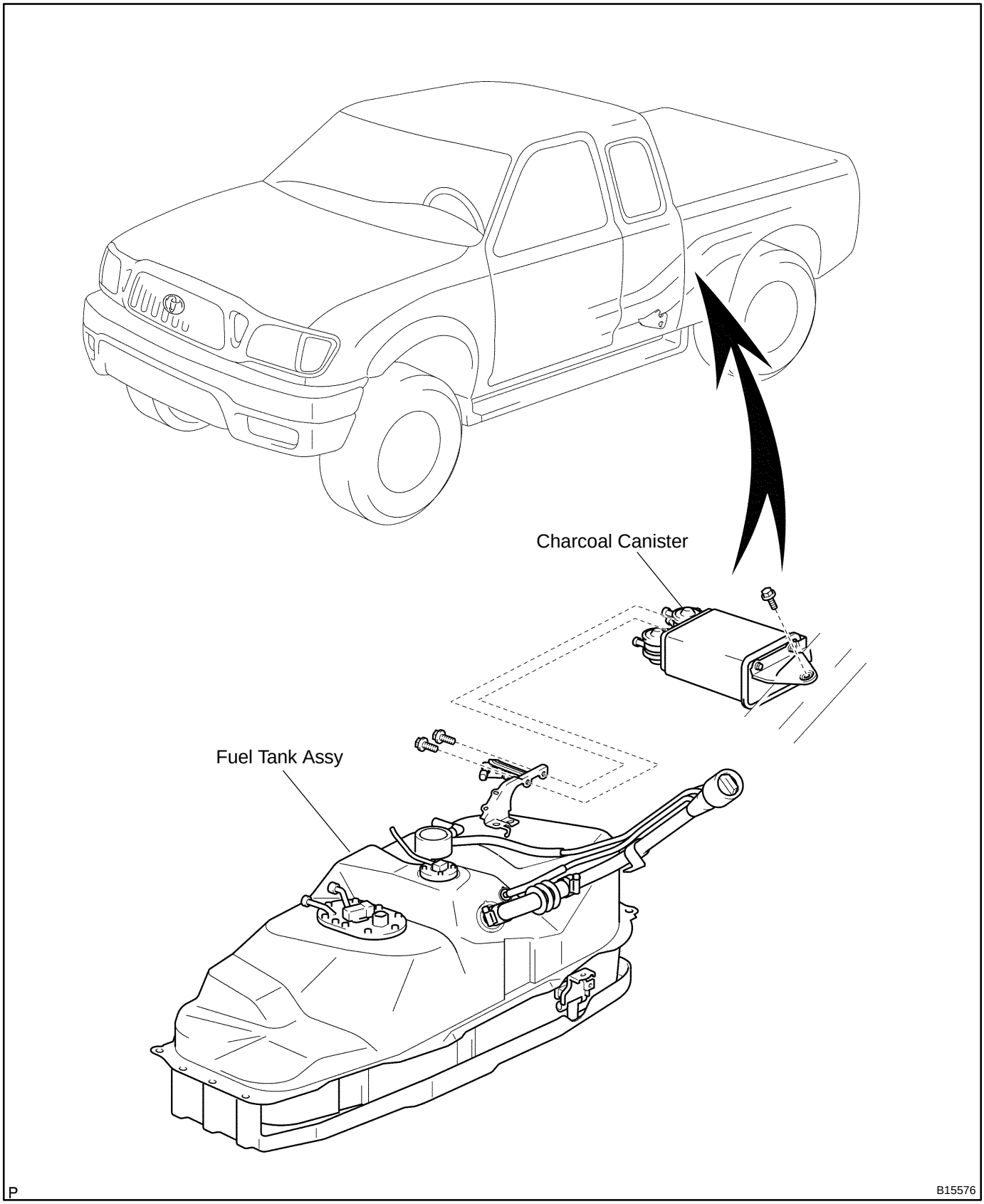

EC0LY–01

INSPECTION

1. INSPECT LINES AND CONNECTIONS

Visually check for loosen connections, sharp bends or damage.

2. INSPECT FUEL TANK

Visually check for deformation, cracks or fuel leakage.

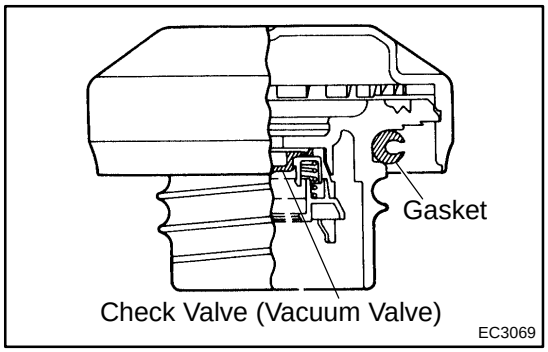

3. INSPECT FUEL TANK CAP

Visually check if the cap and/or gasket are deformed or damaged. If necessary, repair or replace the cap.

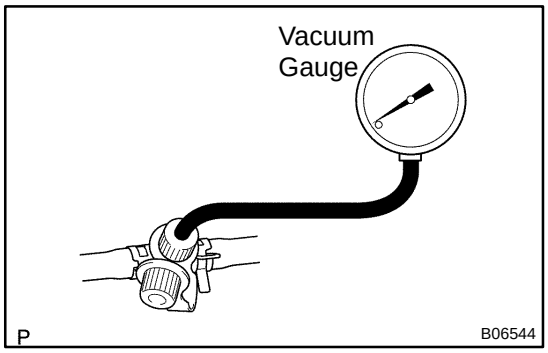

4. INSPECT EVAP SYSTEM LINE

(a) Warm up the engine and stop the engine.
Allow the engine to warm up to normal operating temperature.

(b) Install a vacuum gauge (EVAP control system test equipment vacuum gauge) to the EVAP service port on the purge line.

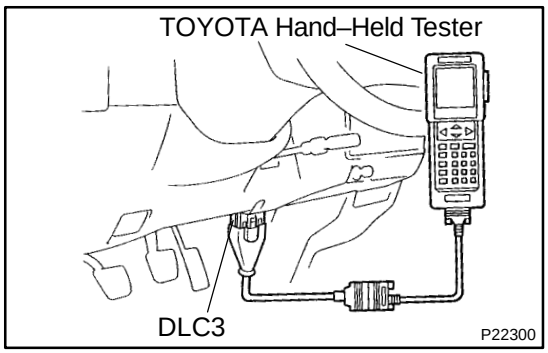

(c) TOYOTA Hand–Held Tester:
Forced driving of the VSV for the EVAP.
(1) Connect a TOYOTA hand–held tester to the DLC3.
(2) Start the engine.
(3) Push the TOYOTA hand–held tester main switch ON.
(4) Use the ACTIVE TEST mode on the TOYOTA hand–held tester to operate the VSV for the EVAP.

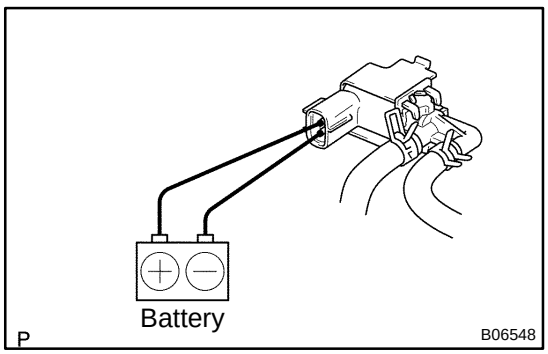

(d) If you have no TOYOTA Hand–Held Tester:
Forced driving of the VSV for the EVAP.
(1) Disconnect the VSV connector for the EVAP.
(2) Connect the positive (+) and negative (–) leads from the battery to the VSV terminals for the EVAP.
(3) Start the engine.

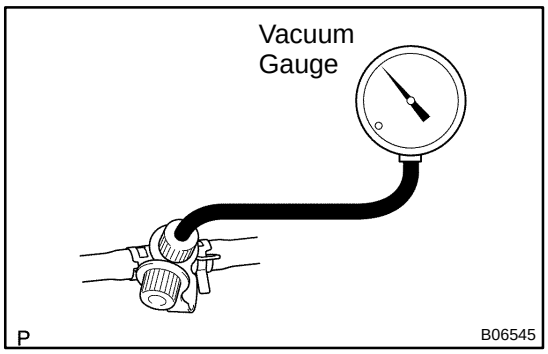

(e) Check the vacuum at idle.
Vacuum:
Maintain at 0.368 – 19.713 in.Hg (5 – 268 in.Aq) for over 5 seconds

HINT:
If the vacuum does not change, you can conclude that the hose connecting the VSV to the service port has come loose or is blocked, or the VSV is malfunctioning.

(f) TOYOTA Hand–Held Tester:
Conclude forced driving of the VSV for the EVAP.
(1) Stop the engine.
(2) Disconnect the TOYOTA hand–held tester from the DLC3.

(g) If you have no TOYOTA Hand–Held Tester:
Conclude forced driving of the VSV for the EVAP.
(1) Stop the engine.
(2) Disconnect the positive (+) and negative (–) leads from the battery from the VSV terminals for the EVAP.
(3) Connect the VSV connector for the EVAP.

(h) Disconnect the vacuum gauge from the EVAP service port on the purge line.

(i) Connect a pressure gauge to the EVAP service port on the purge line.

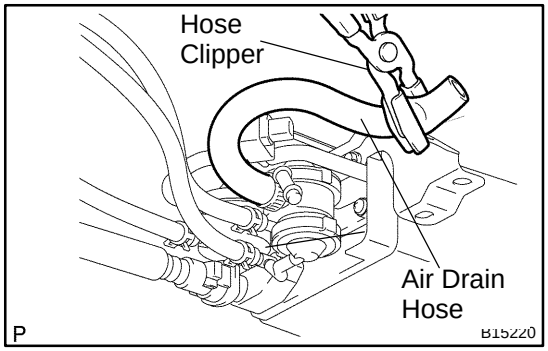

(j) Inspect for the pressure.
(1) Close off the air drain hose of the canister with a hose clipper or similar instrument.

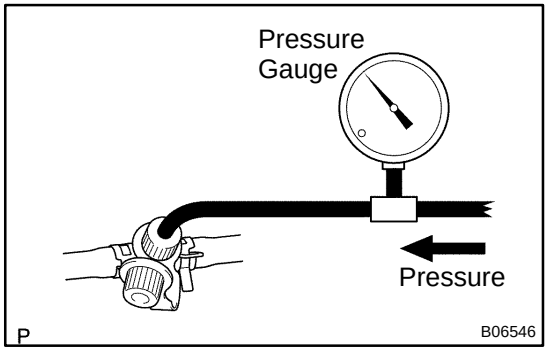

(2) Add the pressure (13.5 – 15.5 in.Aq) from the EVAP service port.
Pressure:
2 minutes after the pressure is added, the gauge should be over 7.7 – 8.8 in.Aq.

HINT:
If you can't add pressure, you can conclude that the hose connecting the VSV–canister–fuel tank has slipped off or the VSV is open.

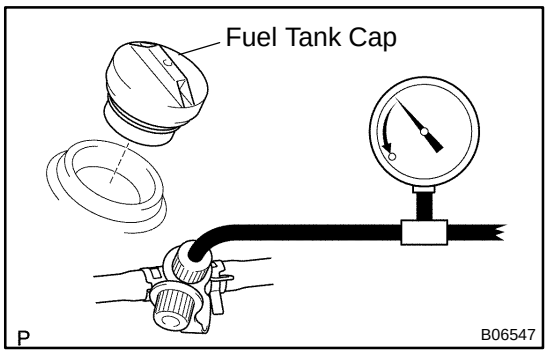

(3) Check if the pressure decreases when the fuel tank cap is removed while adding pressure.

HINT:

If the pressure does not decrease when the filler cap is removed, then you can conclude that the hose connecting the service port to the fuel tank is blocked, etc.

(k) Disconnect the pressure gauge from the EVAP service port on the purge line.

(l) Remove the hose clipper from the air drain hose.

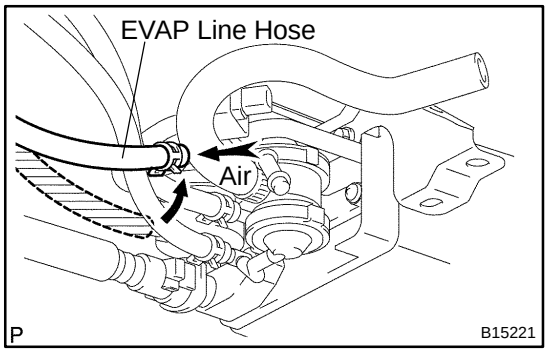

5. CHECK AIRTIGHTNESS IN FUEL TANK AND FILLER PIPE

(a) Disconnect the EVAP line hose from the charcoal canister side and then pressurize and make the internal pressure in the fuel tank 4 kPa (41 gf·cm, 0.58 psi).

(b) Check that the internal pressure of the fuel tank can be hold for 1 minute.

(c) Check the connected portions of each hose and pipe.

(d) Check the installed parts on the fuel tank.

If there is no abnormality, replace the fuel tank and filler pipe.

(e) Reconnect the EVAP line hose to the charcoal canister.

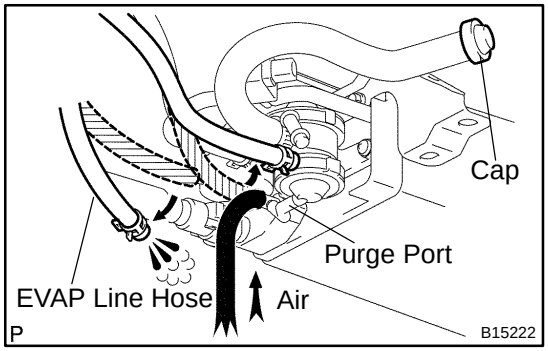

6. INSPECT FUEL CUTOFF VALVE AND FILL CHECK VALVE

(a) Disconnect the purge line hose and EVAP line hose from the charcoal canister.

(b) Plug the cap to the air drain hose.

(c) Pressurize 4 kPa (41 gf·cm, 0.58 psi) to the purge port and check that there is ventilation through the EVAP line hose.

HINT:

In the condition that the fuel is full, as the float value of the fill check valve is closed and has no ventilation, it is necessary to check the fuel amount (volume).

(d) Check if there is any struck in the vent line hose and EVAP line hose.

If there is no stuck in hoses, replace the fuel cutoff valve and fill check valve.

(e) Reconnect the purge line hosew and EVAP line to the charcoal canister.

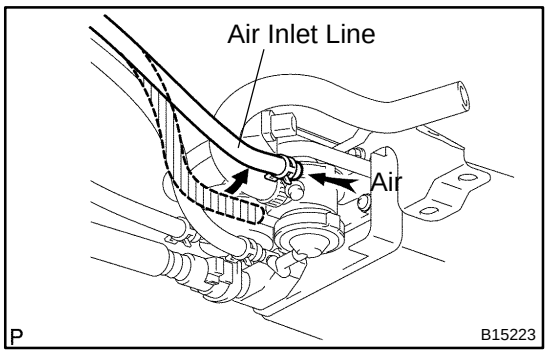

7. CHECK AIR INLET LINE

(a) Disconnect the air inlet line hose from the charcoal canister

(b) Check that there is ventilation in the air inlet line.

(c) Reconnect the air inlet line hose to the charcoal canister.

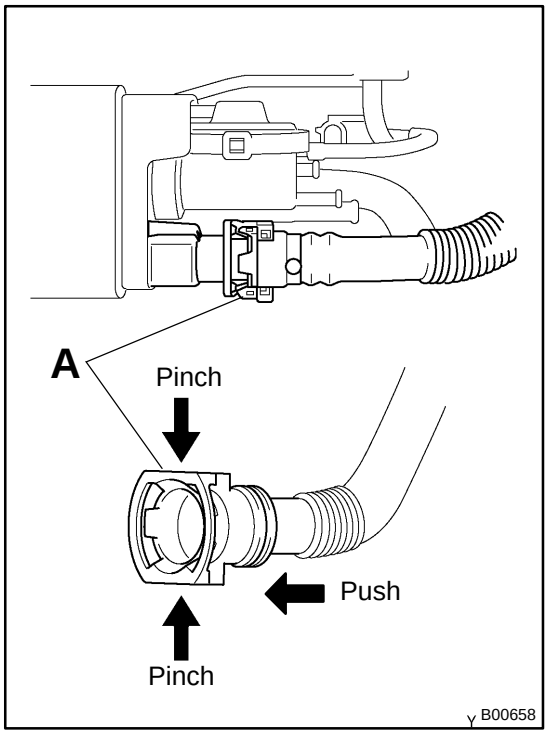

8. REMOVE CHARCOAL CANISTER ASSEMBLY

(a) Remove the spear tire.

(b) Disconnect the VSV connector.

(c) Disconnect the purge line hose, EVAP line hose and air inlet line hose from the charcoal canister.

(d) Disconnect the vent line hose from the charcoal canister.

(1) Push the connecter deep inside.

(2) Pinch portion A.

(3) Pull out the connector.

(e) Remove the 4 bolts and charcoal canister assembly.

(f) Remove the 2 bolts and charcoal canister bracket.

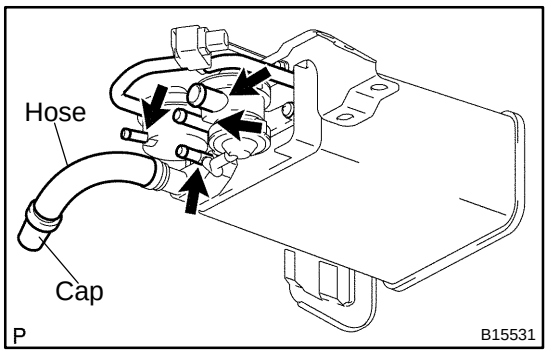

9. INSPECT CHARCOAL CANISTER

(a) Visually check the charcoal canister for cracks or damage.

(b) Inspect the charcoal canister operation.

(1) Plug the vent port with a hose and cap.

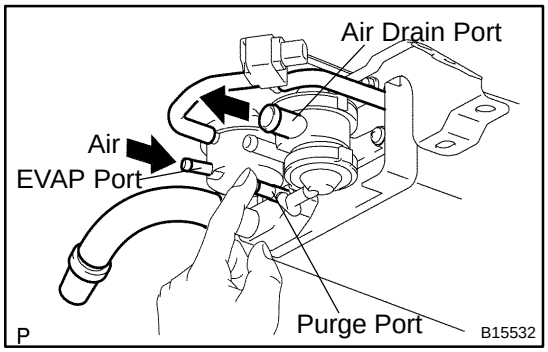

(2) While holding the purge port closed, blow air (1.76 kPa, 18 gf/cm^2, 0.26 psi) into the EVAP port and check that air flows from the air drain port.

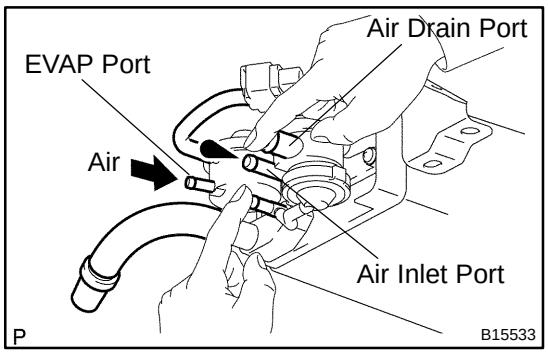

(3) While holding the purge port and the air drain port closed, blow air (1.76 kPa, 18 gf/cm^2, 0.26 psi) into the EVAP port and check that air does not flow from the air inlet port.

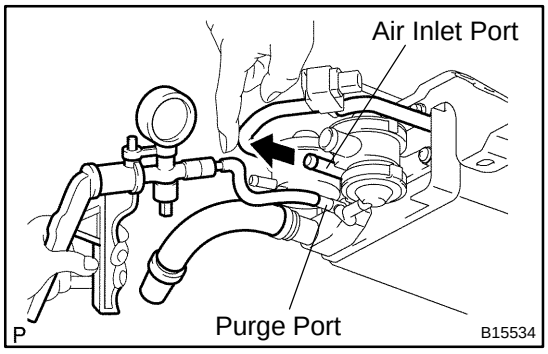

(4) Apply vacuum (3.43 kPa, 25.7 mmHg, 1.01 in.Hg) to the purge port, check that the vacuum does not decrease when the air inlet port is closed, and check that the vacuum decreases when the air inlet port is released.

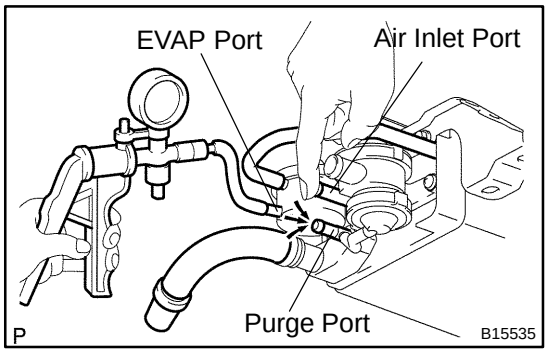

(5) While holding the air inlet port closed, apply vacuum (3.43 kPa, 25.7 mmHg, 1.01 in.Hg) to the EVAP port and check that air flows into the purge port.

If operation is not as specified, replace the charcoal canister.

(6) Remove the cap and hose from the vent port.

10. INSPECT VSV FOR EVAP (See page SF–49)

11. INSPECT VSV FOR PRESSURE SWITCHING VALVE (See page SF–52)

12. INSPECT VSV FOR CANISTER CLOSED VALVE (CCV) (See page SF–50)

13. INSPECT VAPOR PRESSURE SENSOR (See page SF–55)

14. REINSTALL CHARCOAL CANISTER ASSEMBLY

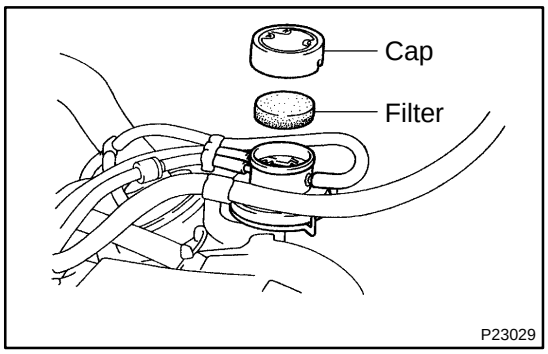

EXHAUST GAS RECIRCULATION (EGR) SYSTEM

EC012–07

INSPECTION

1. INSPECT AND CLEAN FILTER IN EGR VACUUM MODULATOR

(a) Remove the cap and filter.
(b) Check the filter for contamination or damage.
(c) Using compressed air, clean the filter.
(d) Install the filter and cap.

HINT:
Install the filter with the coarser surface facing the atmospheric side (outward).

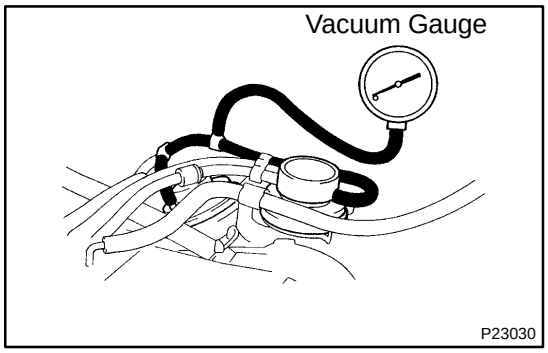

2. INSTALL VACUUM GAUGE

Using a 3–way connector, connect a vacuum gauge to the hose between the EGR valve and EGR vacuum modulator.

3. INSPECT SEATING OF EGR VALVE

Start the engine and check that the engine starts and runs at idle.

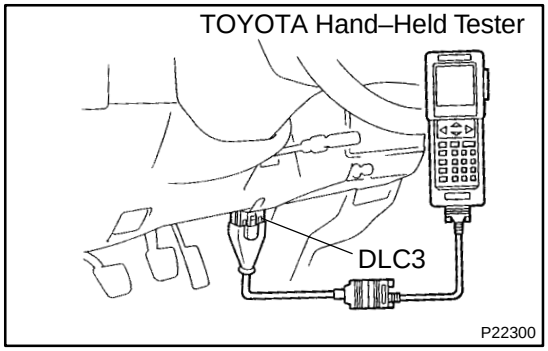

4. CONNECT TOYOTA HAND–HELD TESTER OR OBDII SCAN TOOL

(a) Connect the TOYOTA hand–held tester or OBDII scan tool to the DLC3.
(b) Please refer to the TOYOTA hand–held tester or OBDII scan tool operators manual for further details.

5. INSPECT VSV OPERATION WITH COLD ENGINE

(a) The engine coolant temperature should be below 50˚C (122˚F).
(b) Check that the vacuum gauge indicates zero at 3,500 rpm.
(c) Check that the EGR pipe is not hot.

6. INSPECT OPERATION OF VSV AND EGR VACUUM MODULATOR

(a) Select the active test mode on the TOYOTA hand–held tester (VSV is closed.).

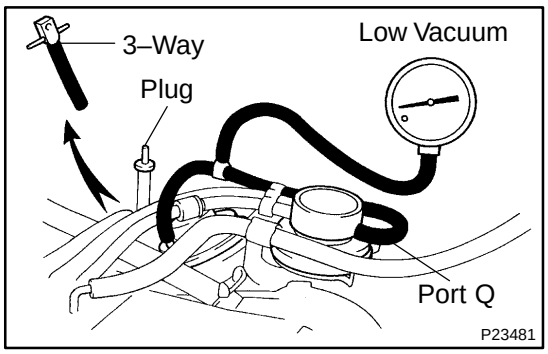

(b) If you have no TOYOTA hand–held tester, check these procedures:
  (1) Remove the 3–way connector with the vacuum hose.
  (2) Connect the vacuum hose (from port Q of EGR vacuum modulator) to the EGR valve.
  (3) Plug the vacuum hose (from VSV for EGR).
(c) Check that the vacuum gauge indicates low vacuum at 3,500 rpm.

7. DISCONNECT TOYOTA HAND–HELD TESTER OR OBDII SCAN TOOL

8. REMOVE VACUUM GAUGE

Remove the vacuum gauge, and reconnect the vacuum hoses to the proper locations.

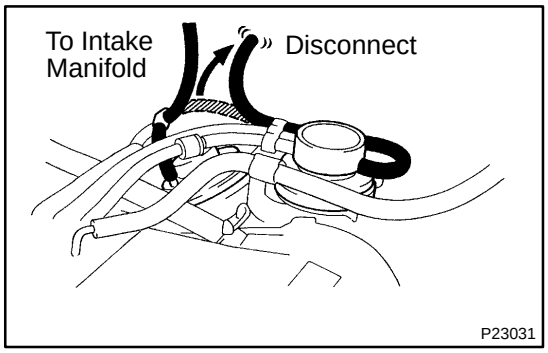

9. INSPECT EGR VALVE

(a) Apply vacuum directly to the EGR valve with the engine idling.
(b) Check that the engine runs rough or dies.
(c) Reconnect the vacuum hoses to the proper locations.

If no problem is found with this inspection, system is normal; otherwise inspect each part.

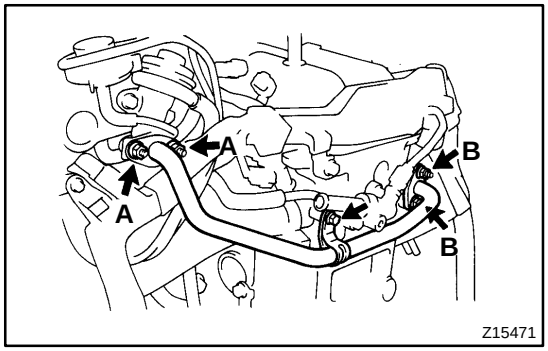

10. REMOVE EGR PIPE

Remove the bolt, 4 nuts, EGR pipe and 2 gaskets.

HINT:

At the time of installation, please refer to the following items.

Install 2 new gaskets.

Torque:
18 N·m (185 kgf·cm, 13 ft·lbf) for bolt
19 N·m (195 kgf·cm, 14 ft·lbf) for nut A
20 N·m (200 kgf·cm, 15 ft·lbf) for nut B

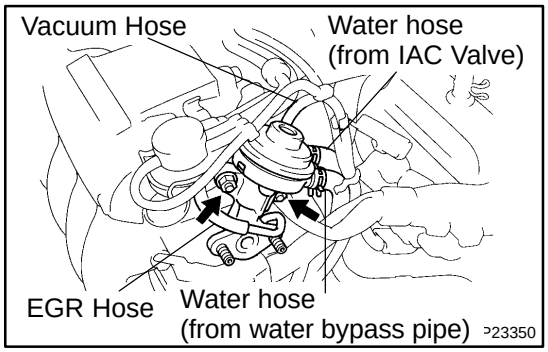

11. REMOVE EGR VALVE

(a) Disconnect the vacuum hose and EGR hose.
(b) Disconnect the 2 water hoses.
  • Water hose (from IAC valve)
  • Water hose (from water bypass pipe)
(c) Remove the 2 nuts, EGR valve and gasket.
  Torque: 19 N·m (195 kgf·cm, 14 ft·lbf)

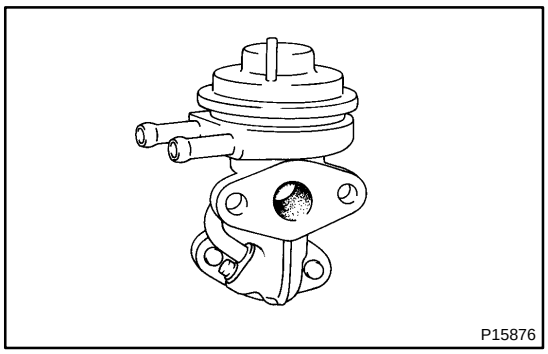

12. INSPECT EGR VALVE

Check for sticking and heavy carbon deposits.

If a problem is found, replace the EGR valve.

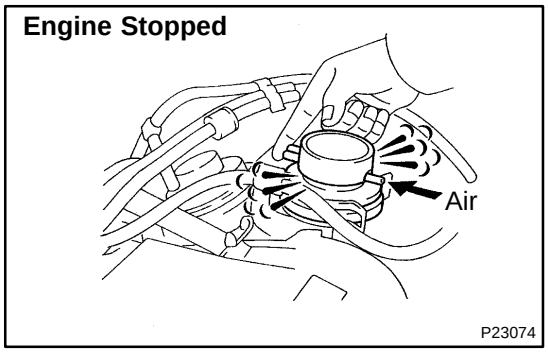

13. DISCONNECT VACUUM HOSES FROM EGR VACUUM MODULATOR

14. INSPECT EGR VACUUM MODULATOR OPERATION

(a) Block ports P and R with your finger.

(b) Blow air into port Q, and check that the air passes through to the air filter side freely.

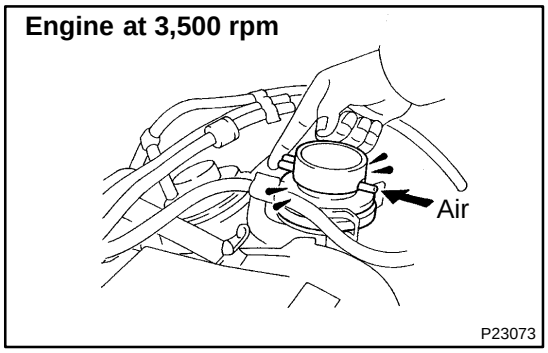

(c) Start the engine, and maintain speed at 3,500 rpm.

(d) Repeat the above test. Check that there is a strong resistance to air flow.

If operation is not as specified, replace the EGR vacuum modulator.

15. RECONNECT VACUUM HOSES TO EGR VACUUM MODULATOR

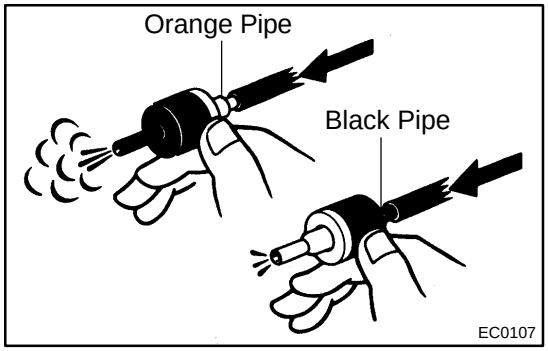

16. REMOVE CHECK VALVE

17. INSPECT CHECK VALVE

(a) Check that air flows from the orange pipe to the black pipe.

(b) Check that air does not flow from the black pipe to the orange pipe.

If operation is not as specified, replace the check valve.

18. INSTALL CHECK VALVE

HINT:

Install the check valve with the orange pipe facing the EGR vacuum modulator side.

POSITIVE CRANKCASE VENTILATION (PCV) SYSTEM

EC010–05

INSPECTION

1. INSPECT PCV VALVE

(a) Remove the PCV valve.
  (1) Disconnect the PCV hose from the PCV valve.
  (2) Remove the PCV valve.

(b) Install a clean hose to the PCV valve.

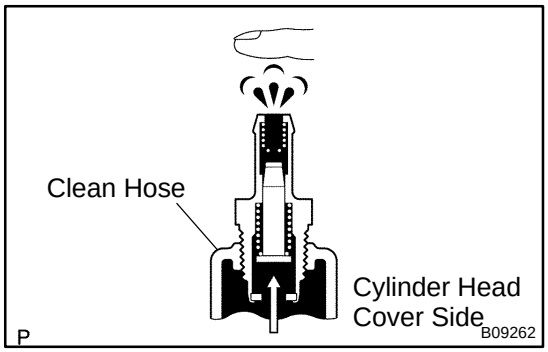

(c) Inspect the PCV valve operation.
  (1) Blow air into the cylinder head cover side, and check that air passes through easily.

CAUTION:
Do not suck air through the valve. Petroleum substances inside the valve are harmful.

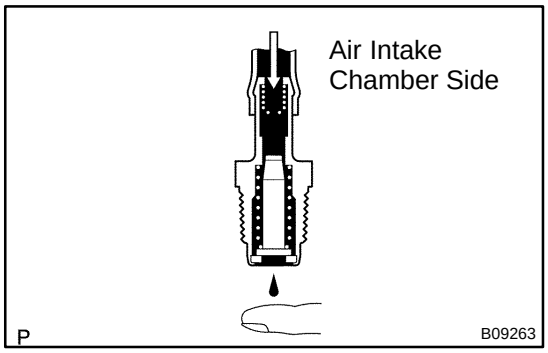

  (2) Blow air into the air intake chamber side, and check that air passes through with difficulty.

If operation is not as specified, replace the PCV valve.

(d) Remove the clean hose from the PCV valve.

(e) Reinstall the PCV valve.

(f) Blow air intake chamber side when lift up the is side valve, and check that the is strongresistance to air flow.

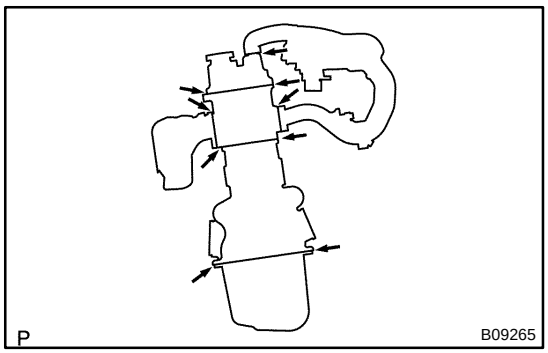

2. INSPECT HOSES, CONNECTIONS AND GASKETS

Visually check for cracks, leaks or damage.

EC0M0–01

DRAWING

Except California Spec.

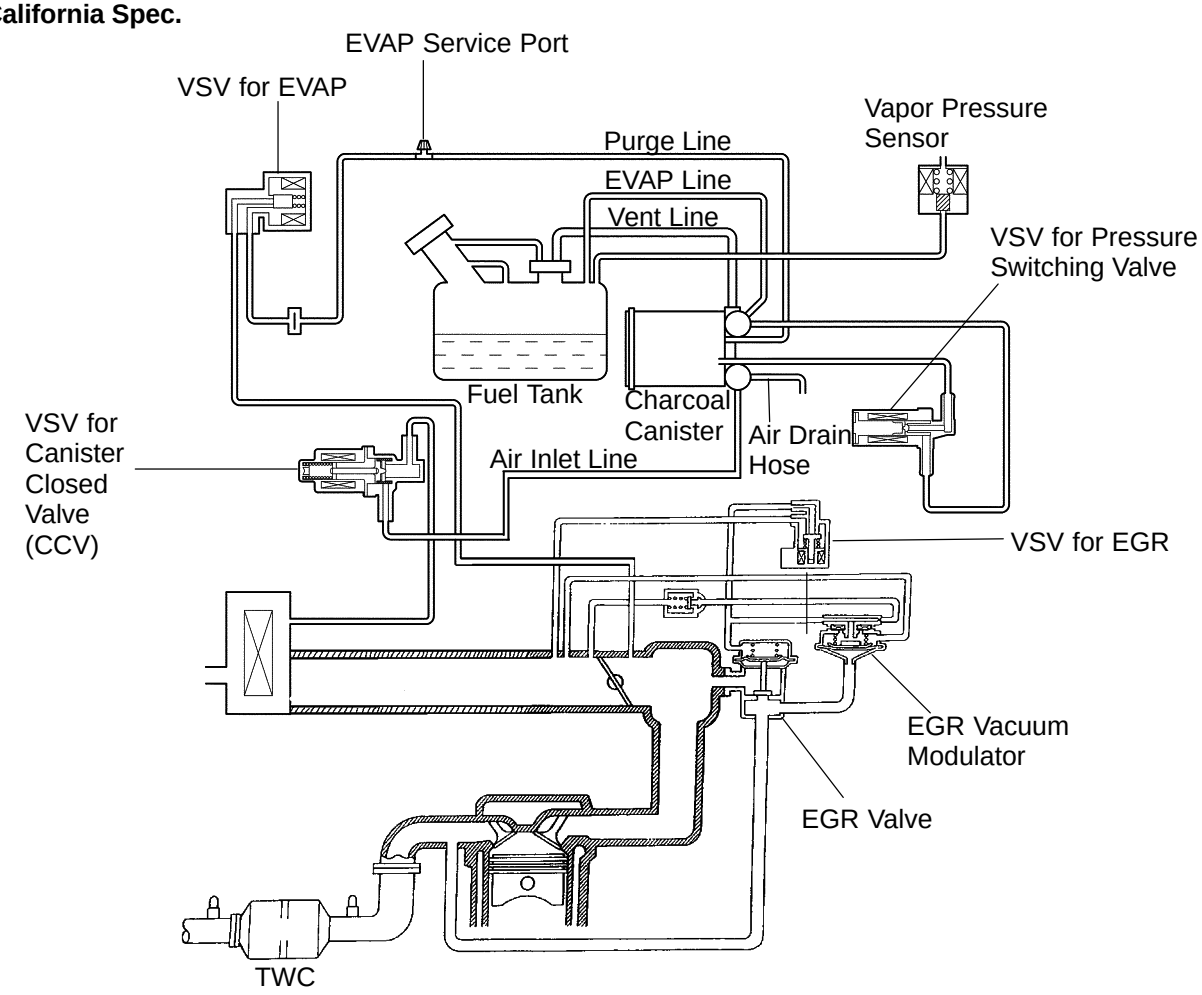

For 2RZ–FE

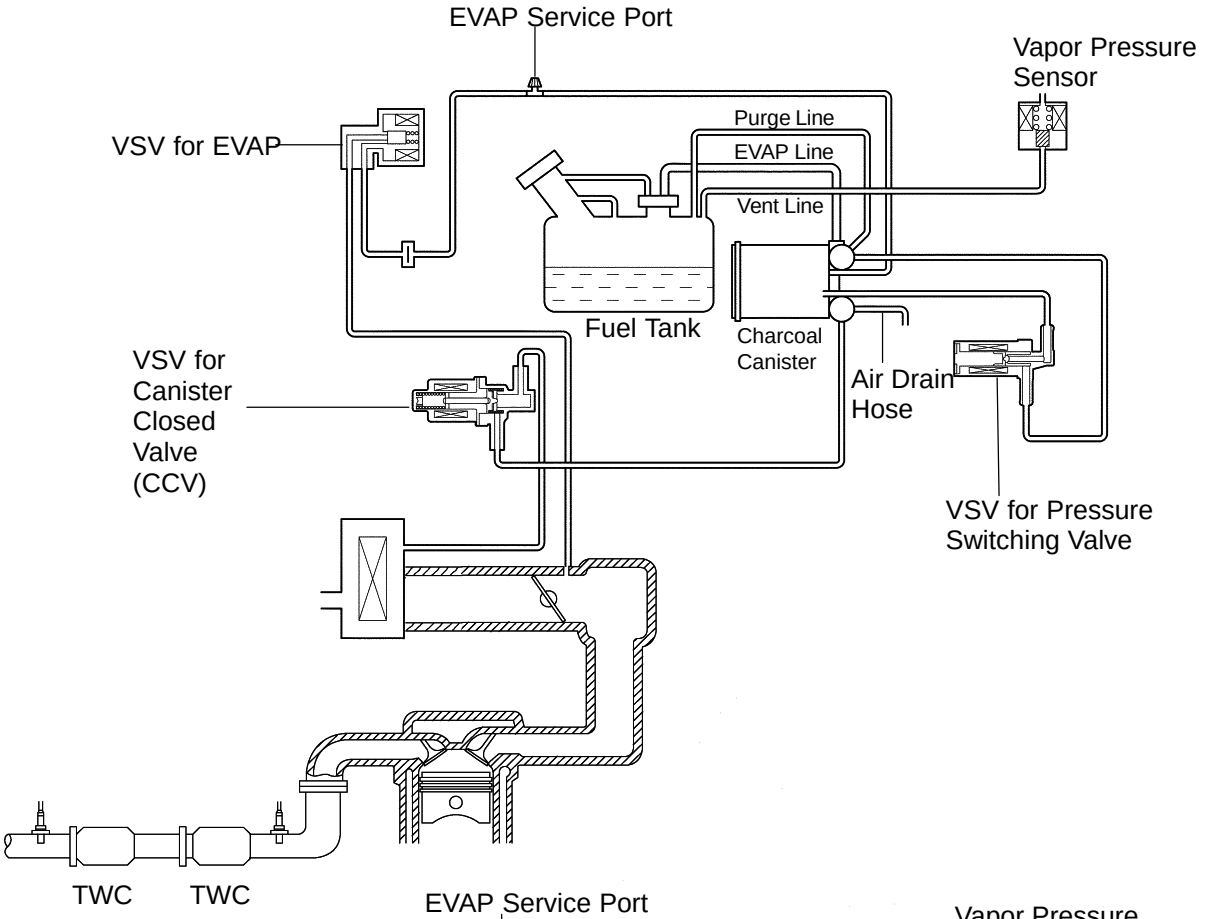

For 3RZ–FE

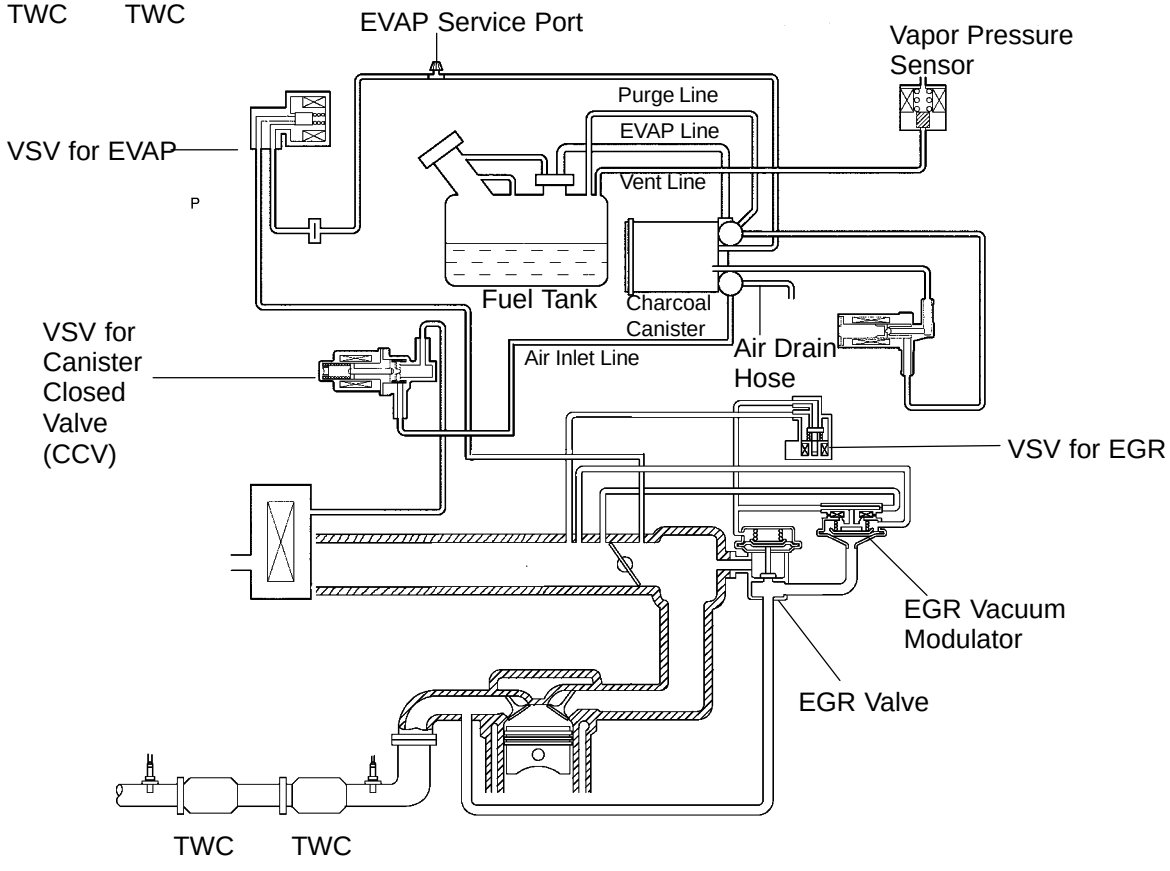

A18453

PARTS LAYOUT AND SCHEMATIC DRAWING

EC0LZ–01

LOCATION

for 2RZ–FE

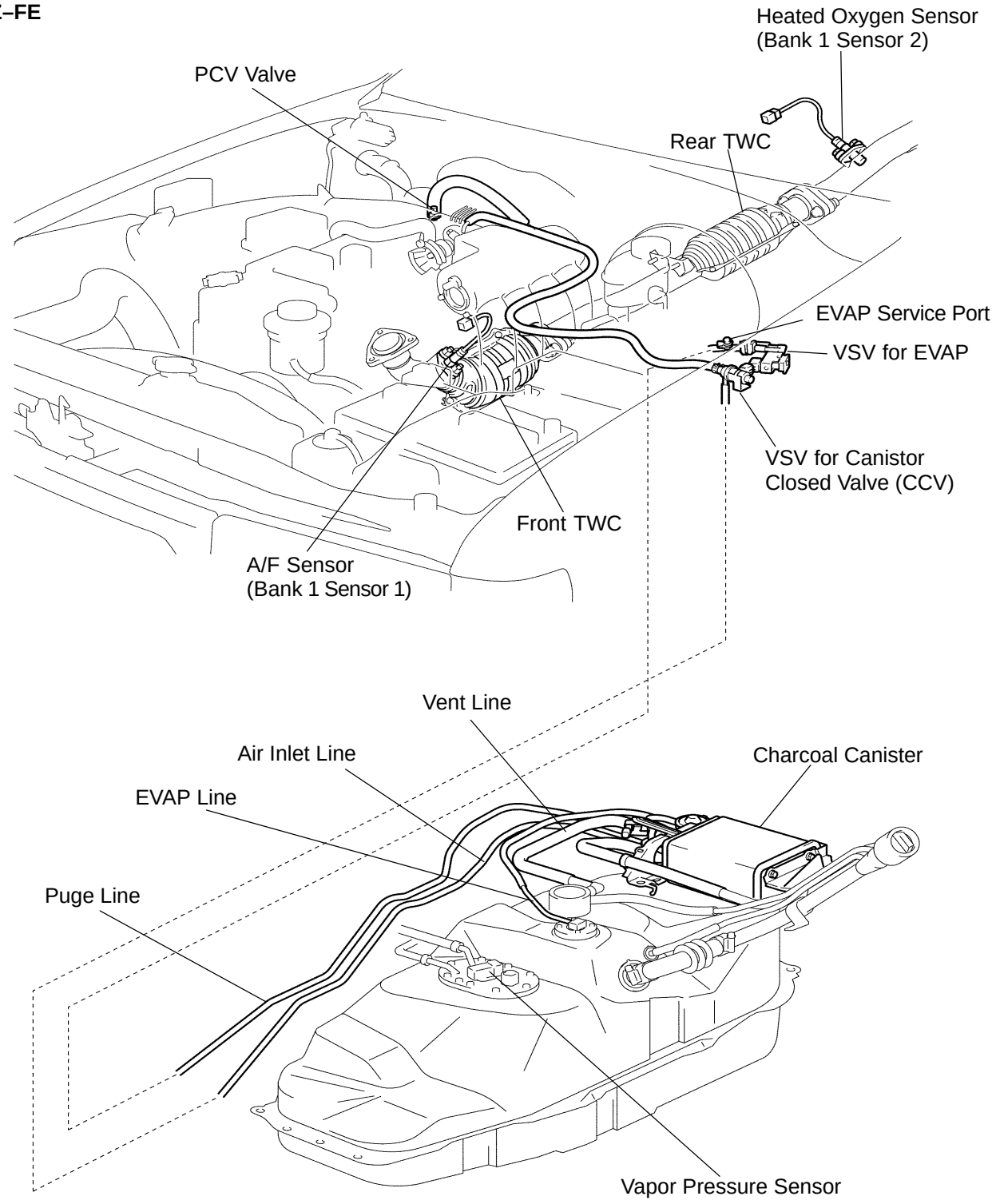

P

B15216

for 3RZ–FE

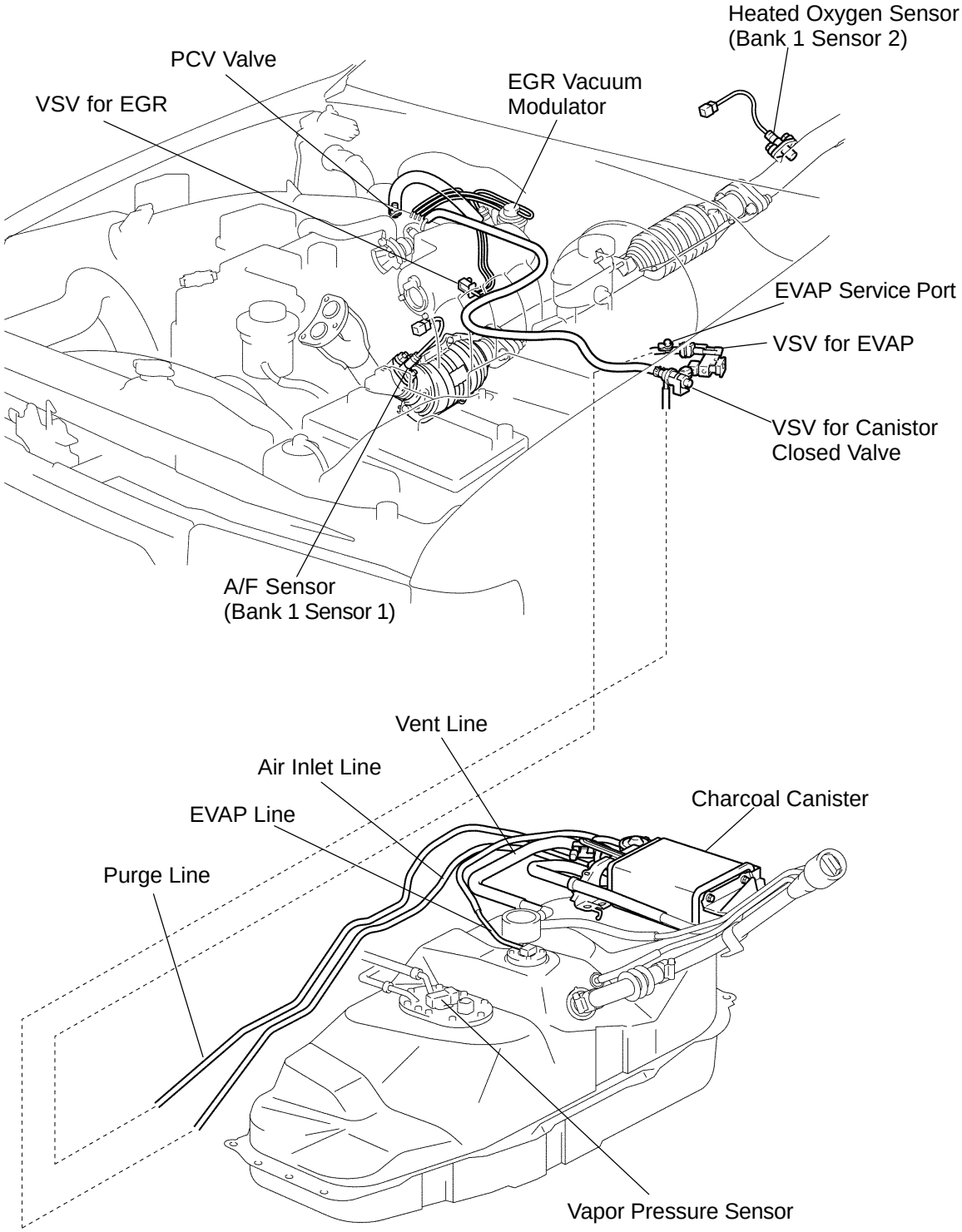

P

B15217

EC0E4–03

COMPONENTS

for 2RZ–FE

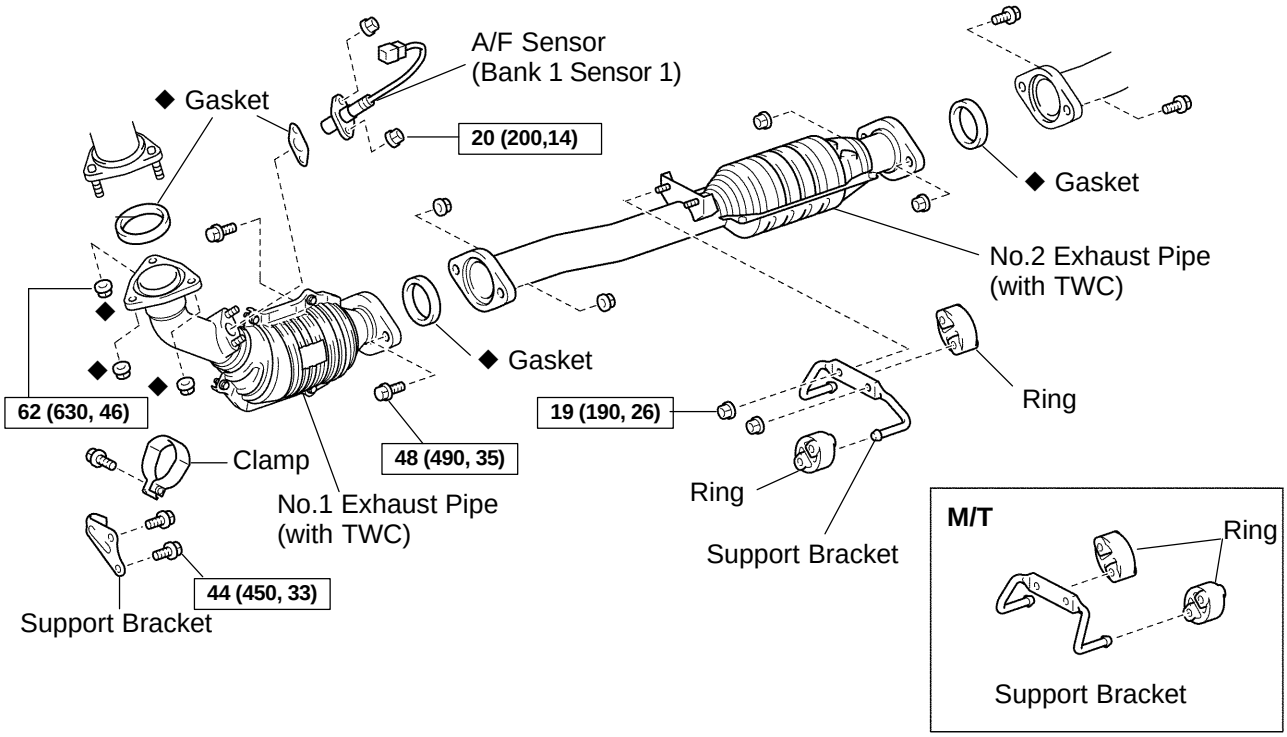

for 3RZ–FE

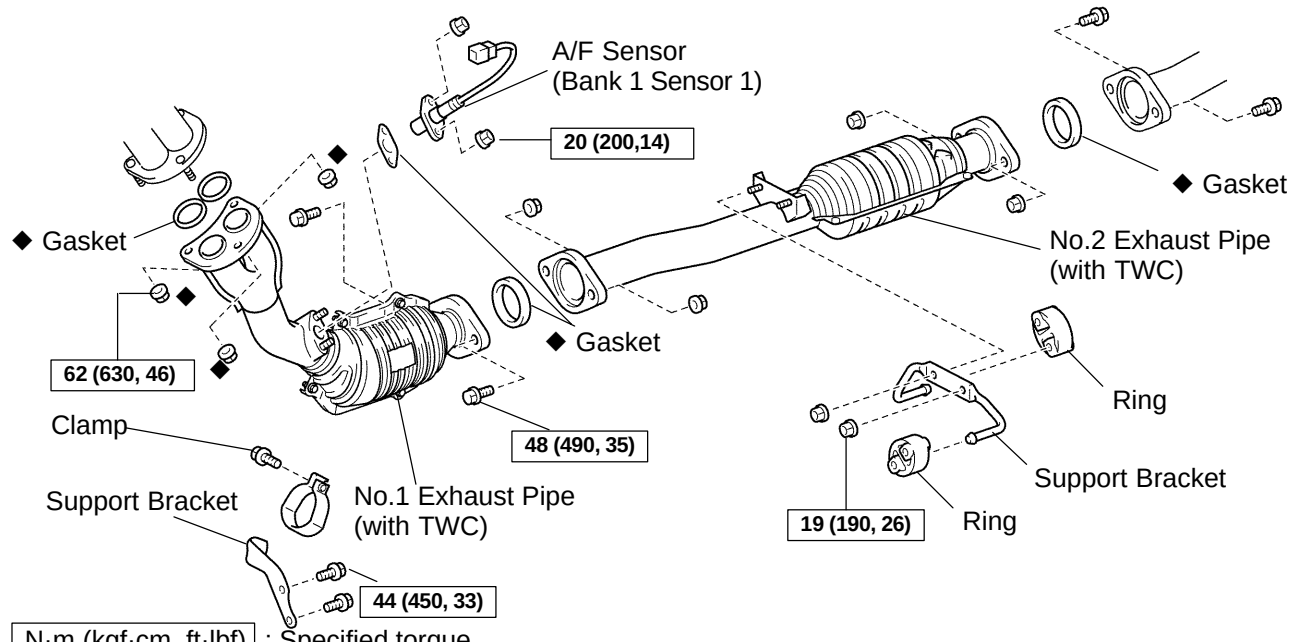

N·m (kgf·cm, ft·lbf) : Specified torque

◆ Non–reusable part

B15219

THREE–WAY CATALYTIC CONVERTER (TWC) SYSTEM

EC0E3–01

ON–VEHICLE INSPECTION

1. INSPECT EXHAUST PIPE AND TWC

(a) Check the connections for looseness or damage.

(b) Check the clamps for weakness, cracks or damage.

(c) Check the TWC for dents or damage.

If any part of the protector is damaged or dented to the extent that it contacts the TWC, repair or replace it.

2. INSPECT HEAT INSULATOR

(a) Check the heat insulator for damage.

(b) Check for the adequate clearance between the TWC and heat insulator.

EMISSION CONTROL SYSTEM

EC016–04

PURPOSE

The emission control systems are installed to reduce the amount of CO, HC and NOx exhausted from the engine (3 and 4), to prevent the atmospheric release of blow–by gas–containing HC (1) and evaporated fuel containing HC being released from the fuel tank (2).
The function of each system is shown in these table.

System	Abbreviation	Function
1. Positive Crankcase Ventilation	PCV	Reduces crankcase blow–by gas (HC)
2. Evaporative Emission Control	EVAP	Reduces evaporated HC
3. Three–Way Catalytic Converter	TWC	Reduces CO, HC and NOx
4. Sequential Multiport Fuel Injection *	SFI	Injects a precisely timed, optimum amount of fuel for reduced exhaust emissions

Remark: * For inspection and repair of the SFI system, refer to the SF section of this manual.

EVAPORATIVE EMISSION (EVAP) CONTROL SYSTEM

EC0LV–01

COMPONENTS

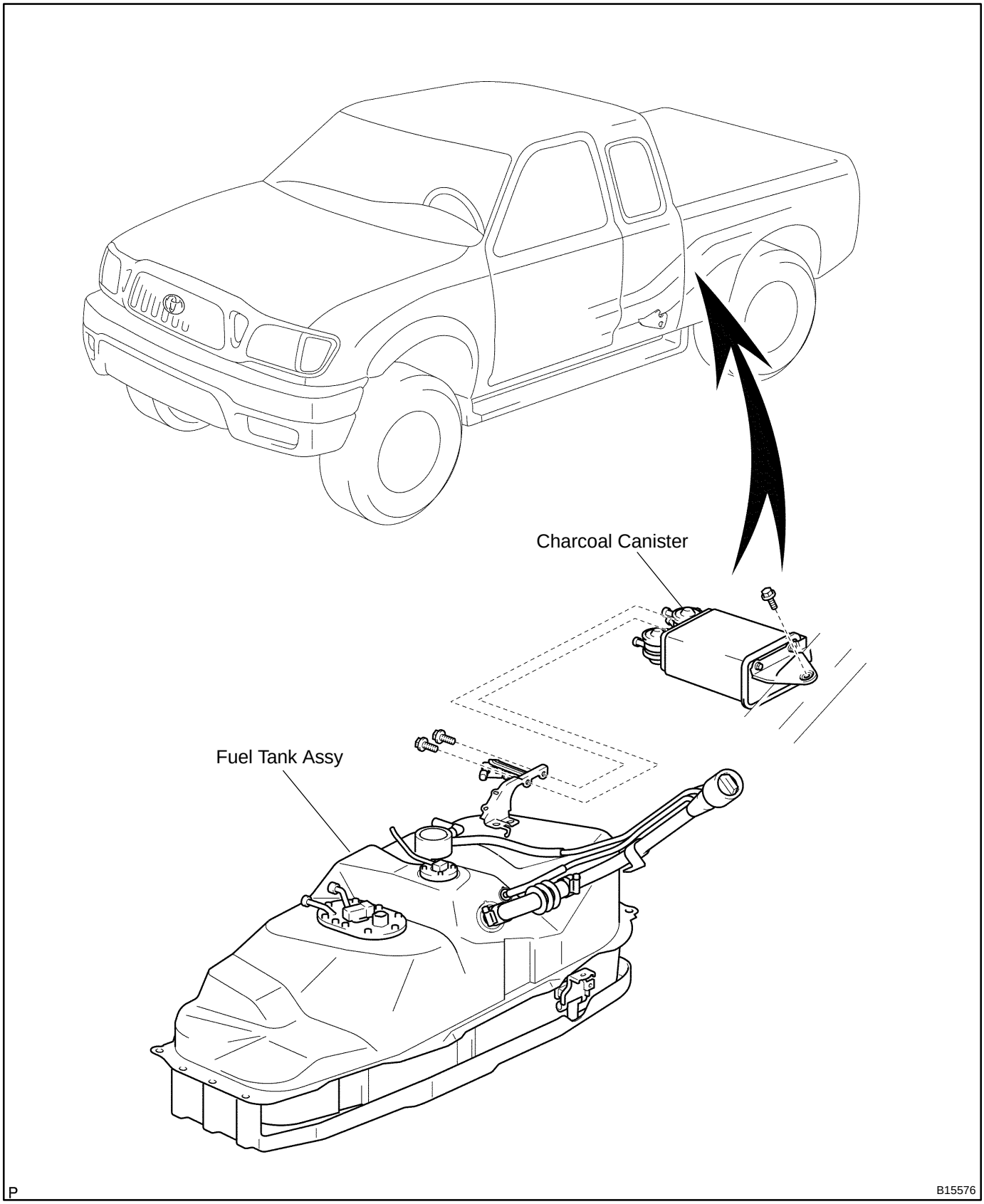

EC0LW–01

INSPECTION

1. INSPECT LINES AND CONNECTIONS

Visually check for loose connections, sharp bends or damage.

2. INSPECT FUEL TANK

Visually check for deformation, cracks or fuel leakage.

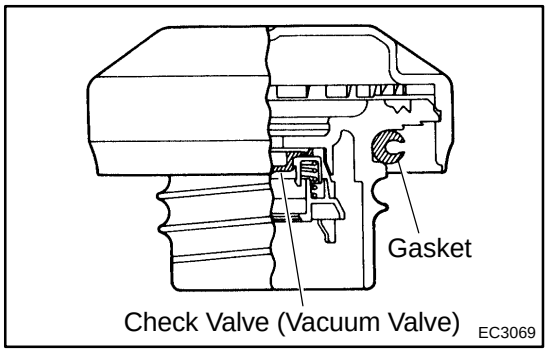

3. INSPECT FUEL TANK CAP

Visually check if the cap and/or gasket are deformed or damaged.

If necessary, repair or replace the cap.

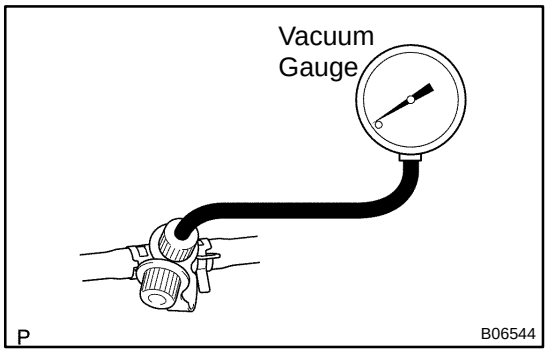

4. INSPECT EVAP SYSTEM LINE

(a) Warm up the engine and stop the engine.
Allow the engine to warm up to normal operating temperature.

(b) Install a vacuum gauge (EVAP control system test equipment vacuum gauge) to the EVAP service port on the purge line.

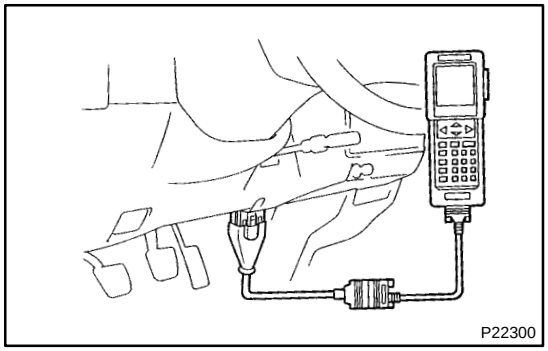

(c) TOYOTA Hand–Held Tester:
Forced driving of the VSV for the EVAP.
(1) Connect a TOYOTA hand–held tester to the DLC3.
(2) Start the engine.
(3) Push the TOYOTA hand–held tester main switch ON.
(4) Use the ACTIVE TEST mode on the TOYOTA hand–held tester to operate the VSV for the EVAP.

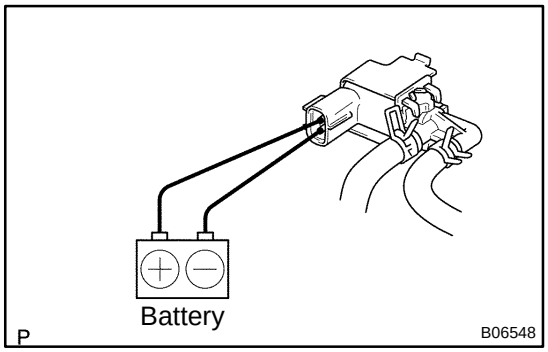

(d) If you have no TOYOTA Hand–Held Tester:
Forced driving of the VSV for the EVAP.
(1) Disconnect the VSV connector for the EVAP.
(2) Connect the positive (+) and negative (–) leads from the battery to the VSV terminals for the EVAP.
(3) Start the engine.

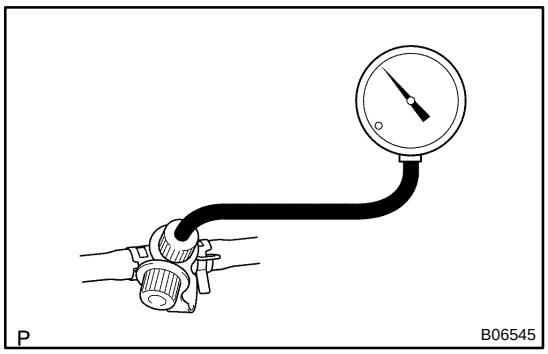

(e) Check the vacuum at idle.
Vacuum:
Maintain at 0.368 – 19.713 in.Hg (5 – 268 in.Aq) for over 5 seconds

HINT:
If the vacuum does not change, you can conclude that the hose connecting the VSV to the service port has come loose or is blocked, or the VSV is malfunctioning.

(f) TOYOTA Hand–Held Tester:
Conclude forced driving of the VSV for the EVAP.
(1) Stop the engine.
(2) Disconnect the TOYOTA hand–held tester from the DLC3.

(g) If you have no TOYOTA Hand–Held Tester:
Conclude forced driving of the VSV for the EVAP.
(1) Stop the engine.
(2) Disconnect the positive (+) and negative (–) leads from the battery from the VSV terminals for the EVAP.
(3) Connect the VSV connector for the EVAP.

(h) Disconnect the vacuum gauge from the EVAP service port on the purge line.

(i) Connect a pressure gauge to the EVAP service port on the purge line.

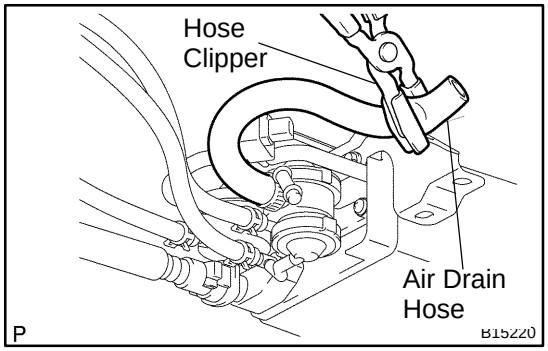

(j) Check the pressure.
(1) Close off the air drain hose at the marked position of the canister with a hose clipper or similar instrument.

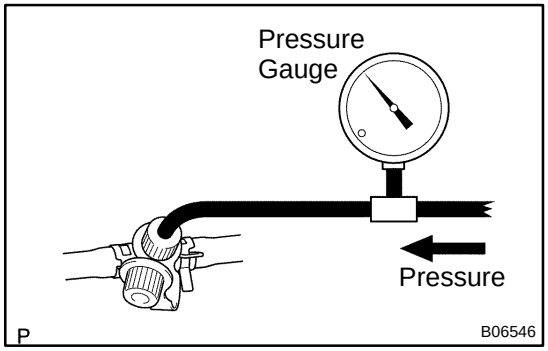

(2) Add the pressure (13.5 – 15.5 in.Aq) from the EVAP service port.
Pressure:
2 minutes after the pressure is added, the gauge should be over 7.7 – 8.8 in.Aq.

HINT:
If you can't add pressure, you can conclude that the hose connecting the VSV ~ canister ~ fuel tank has slipped off or the VSV is open.

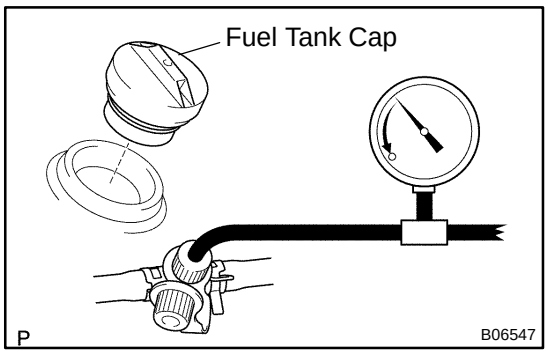

(3) Check if the pressure decreases when the fuel tank cap is removed while adding pressure.

HINT:

If the pressure does not decrease when the filler cap is removed, then you can conclude that the hose connecting the service port to the fuel tank is blocked, etc.

(k) Disconnect the pressure gauge from the EVAP service port on the purge line.

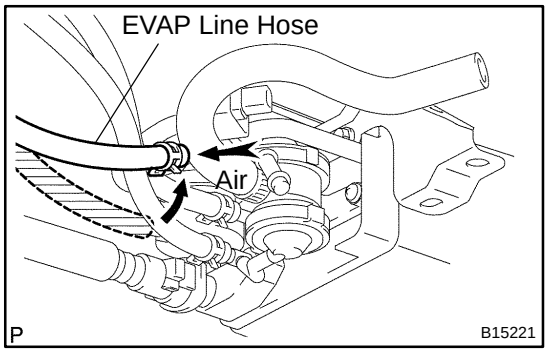

5. CHECK AIRTIGHTNESS IN FUEL TANK AND FILLER PIPE

(a) Disconnect the EVAP line hose from the charcoal canister side and then pressurize and make the internal pressure in the fuel tank 4 kPa (41 gf·cm, 0.58 psi).

(b) Check that the internal pressure of the fuel tank can be hold for 1 minute.

(c) Check the connected portions of each hose and pipe.

(d) Check the installed parts on the fuel tank.

If the is no abnormality, replace the fuel tank and filler pipe.

(e) Reconnect the EVAP line hose to the charcoal canister.

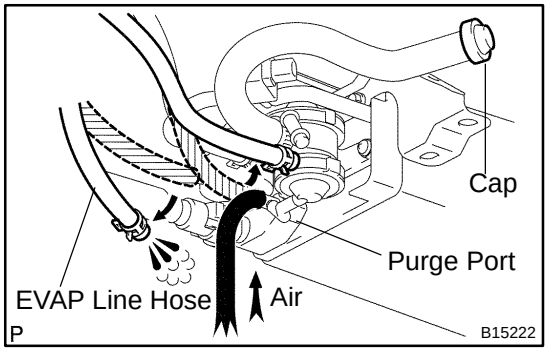

6. INSPECT FUEL CUTOFF VALVE AND FILL CHECK VALVE

(a) Disconnect the purge line hose and EVAP line hose from the charcoal canister.

(b) Plug the cap to the air drin hose.

(c) Pressurize 4 kPa (41 gf·cm, 0.58 psi) to the plug port and check that there is ventilation through the EVAP line hose.

HINT:

In the condition that the fuel is full, as the float value of the fill check valve is closed and has no ventilation, it is necessary to check the fuel amount (volume).

(d) Check if there is any struck in the vent line hose and EVAP line hose.

If there is no stuck in hoses, replace the fuel cutoff valve and fill check valve.

(e) Reconnect the purge line hose and EVAP line hose to the charcoal canister.

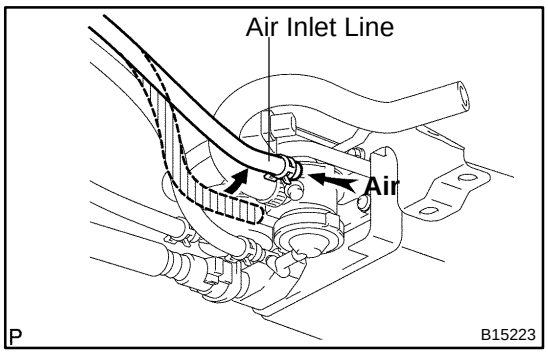

7. CHECK AIR INLET LINE

(a) Disconnect the air inlet line hose from the charcoal canister.
(b) Check that there is ventilation in the air inlet line.
(c) Reconnect the air inlet line hose to the charcoal canister.

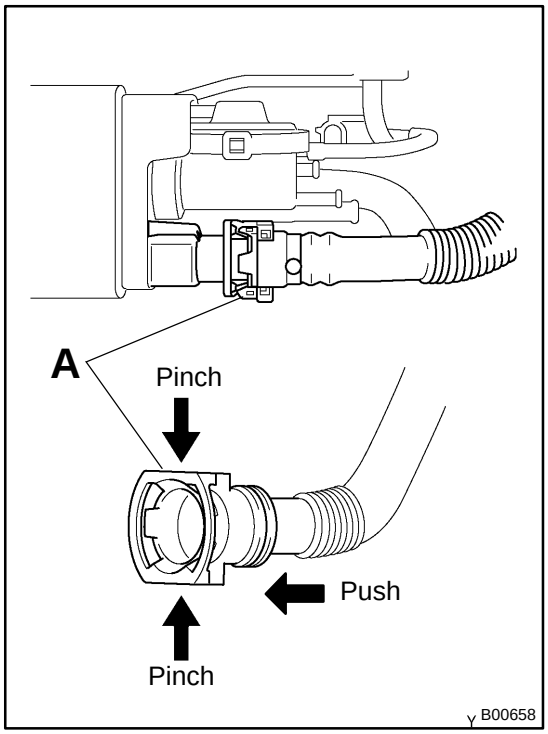

8. REMOVE CHARCOAL CANISTER ASSEMBLY

(a) Remove the spear tire.
(b) Disconnect the VSV connector.
(c) Disconnect the purge line hose, EVAP line hose and air inlet line hose from the charcoal canister.
(d) Disconnect the vent line hose from the charcoal canister.
  (1) Push the connector deep inside.
  (2) Pinch portion A.
  (3) Pull out the connector.
(e) Remove the 4 bolts and the charcoal canister assembly.
(f) Remove the 2 bolts and charcoal canister bracket.

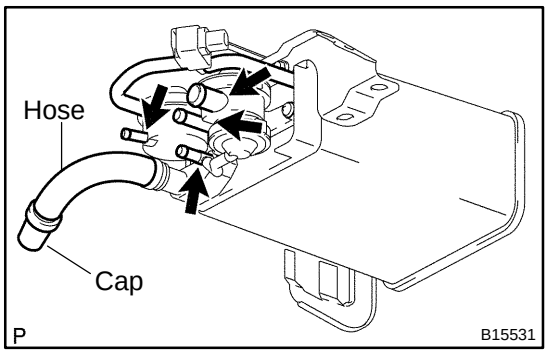

9. INSPECT CHARCOAL CANISTER

(a) Visually check the charcoal canister for cracks or damage.
(b) Inspect the charcoal canister operation.
  (1) Plug the vent port with a hose and cap.

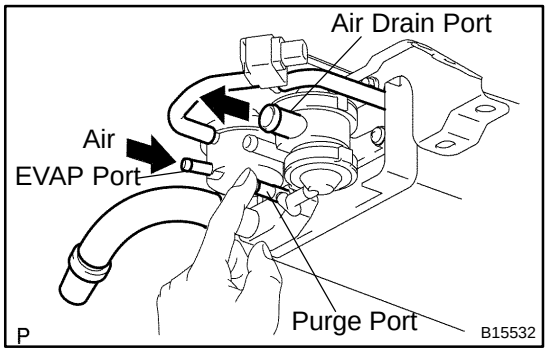

  (2) While holding the purge port closed, blow air (1.76 kPa, 18 gf/cm^2, 0.26 psi) into the EVAP port and check that air flows from the air drain port.

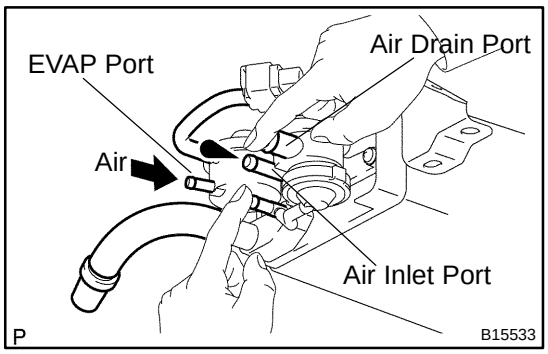

(3) While holding the purge port and the air drain port closed, blow air (1.76 kPa, 18 gf/cm^2, 0.26 psi) into the EVAP port and check that air does not flow from the air inlet port.

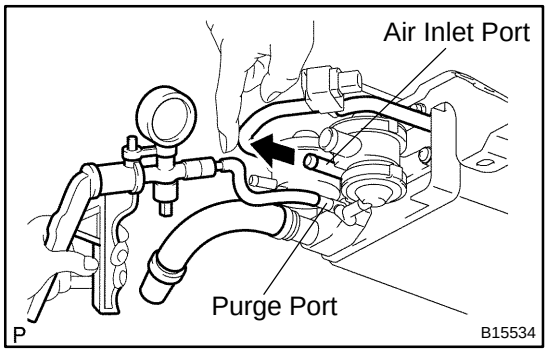

(4) Apply vacuum (3.43 kPa, 25.7 mmHg, 1.01 in.Hg) to the purge port, check that the vacuum does not decrease when the air inlet port is closed, and check that the vacuum decreases when the air inlet port is released.

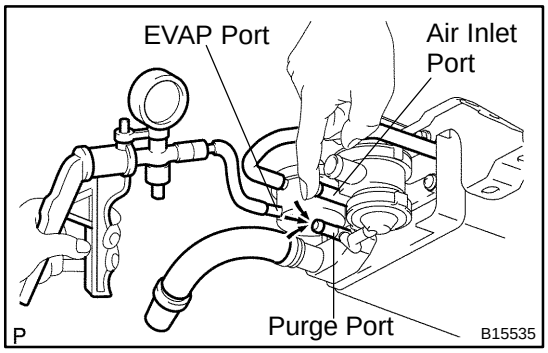

(5) While holding the air inlet port closed, apply vacuum (3.43 kPa, 25.7 mmHg, 1.01 in.Hg) to the EVAP port and check that air flows into the purge port.

If operation is not as specified, replace the charcoal canister.

(6) Remove the cap and hose from the vent port.

10. INSPECT VSV FOR EVAP (See page SF–49)

11. INSPECT VSV FOR PRESSURE SWITCHING VALVE (See page SF–52)

12. INSPECT VSV FOR CANISTER CLOSED VALVE (CCV) (See page SF–50)

13. INSPECT VAPOR PRESSURE SENSOR (See page SF–55)

14. REINSTALL CHARCOAL CANISTER ASSEMBLY

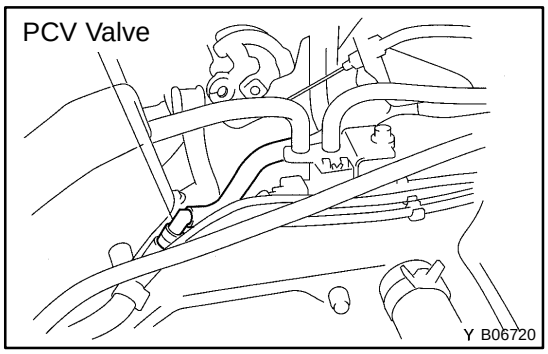

POSITIVE CRANKCASE VENTILATION (PCV) SYSTEM

EC0LU–01

INSPECTION

1. INSPECT PCV VALVE

(a) Remove the PCV valve.
  (1) Disconnect the PCV hose from the PCV valve.
  (2) Remove the PCV valve.

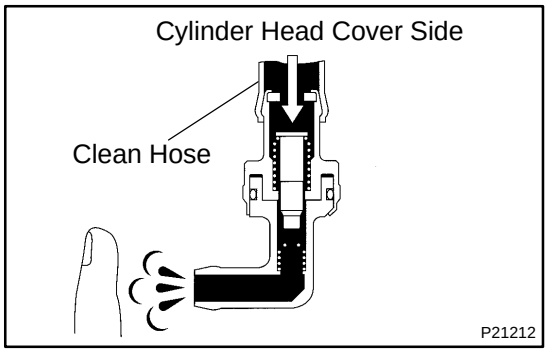

(b) Install a clean hose to the PCV valve.
(c) Inspect the PCV valve operation.
  (1) Blow air into the cylinder head cover side, and check that air passes through easily.

CAUTION:
Do not suck air through the valve. Petroleum substances inside the valve are harmful.

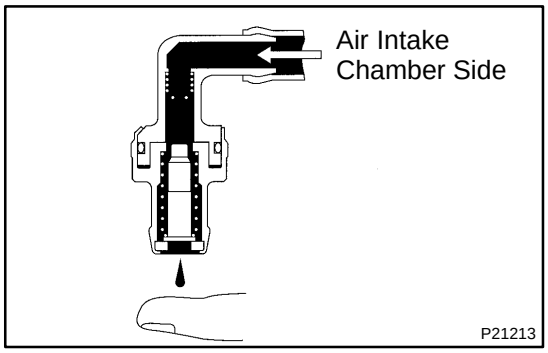

  (2) Blow air into the air intake chamber side, and check that air passes through with difficulty.
(d) Remove the clean hose from the PCV valve.
(e) Reinstall the PCV valve.

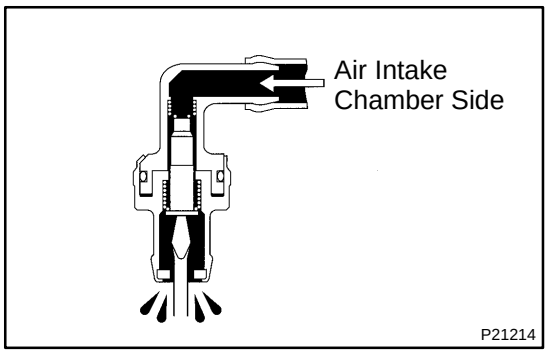

  (1) Blow air the intake chamber side when lift up the inside valve, and check that there is a strong resistance to air flow.

If operation is not as specified, replace the PCV valve.
(f) Remove the clean hose from the PCV valve.
(g) Reinstall the PCV valve.

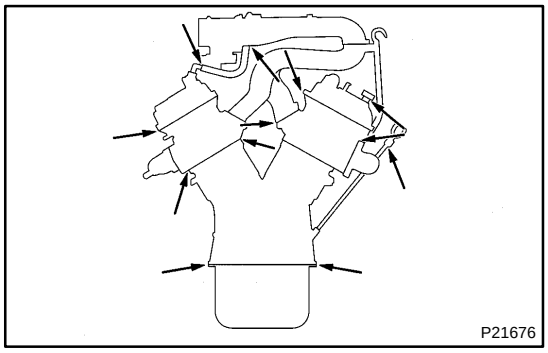

2. INSPECT HOSES, CONNECTIONS AND GASKETS

Visually check for cracks, leaks or damage.

EC018–08

DRAWING

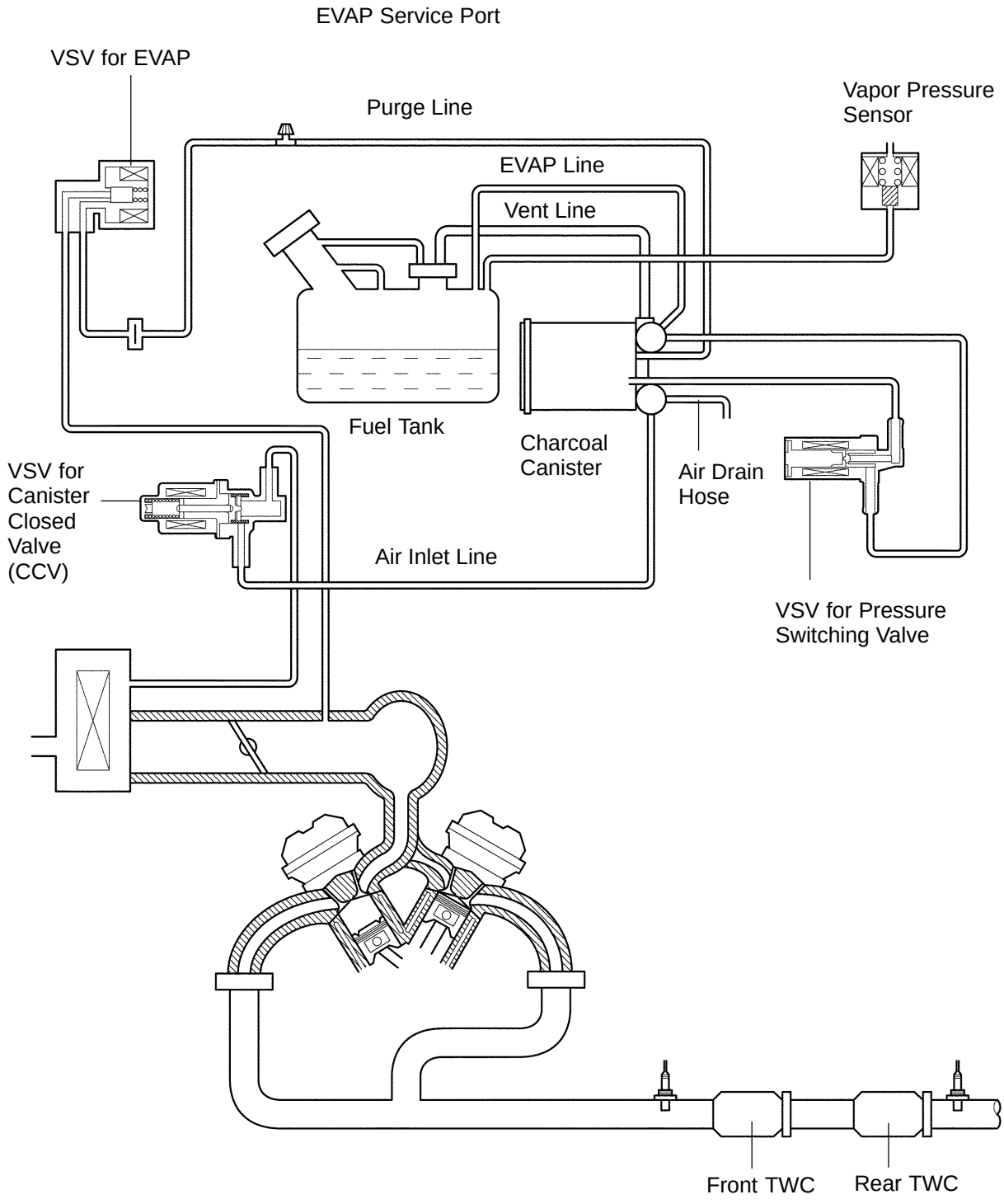

P B13451

PARTS LAYOUT AND SCHEMATIC DRAWING

EC017–08

LOCATION

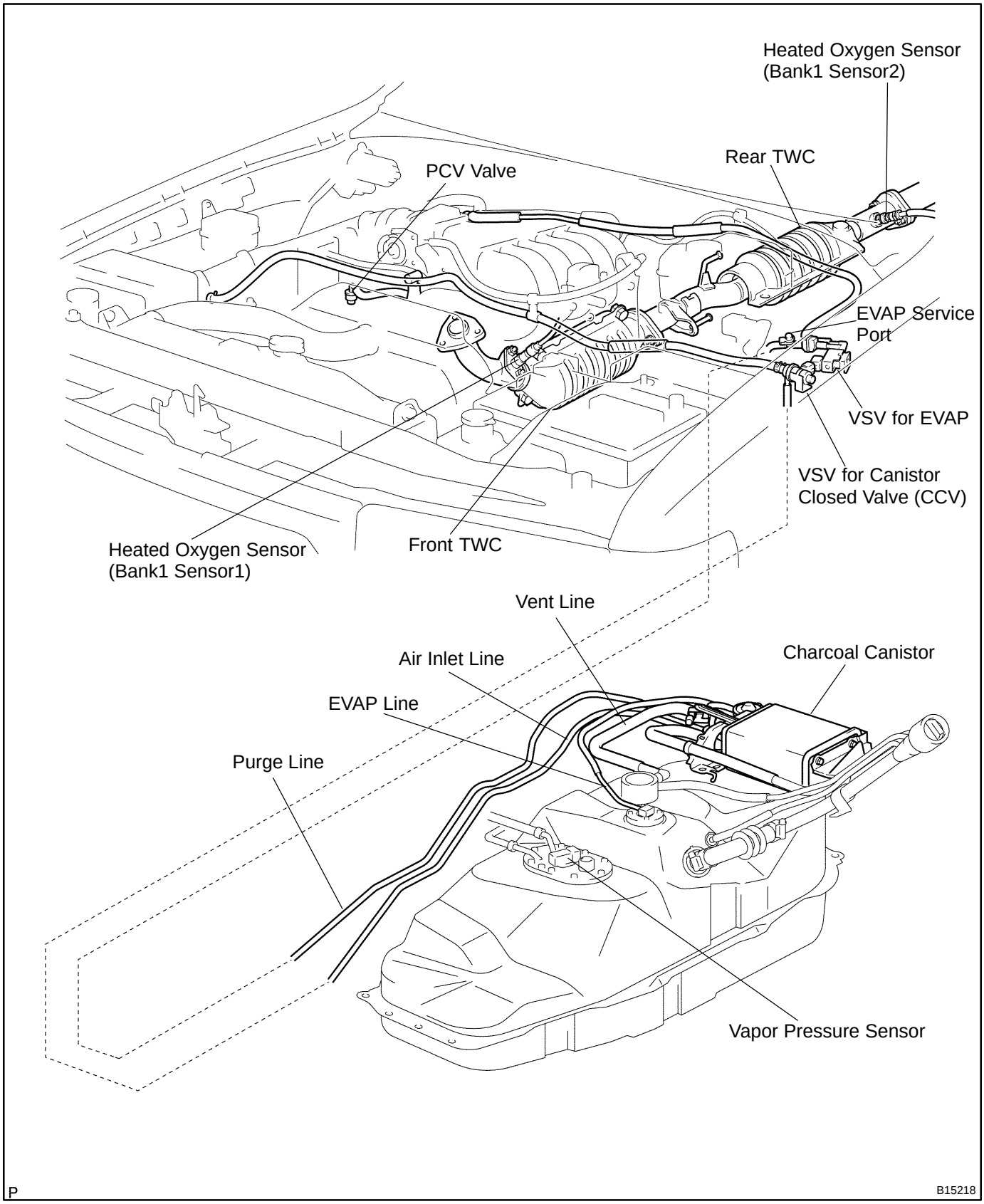

EC0DZ–03

COMPONENTS

2WD, 4WD

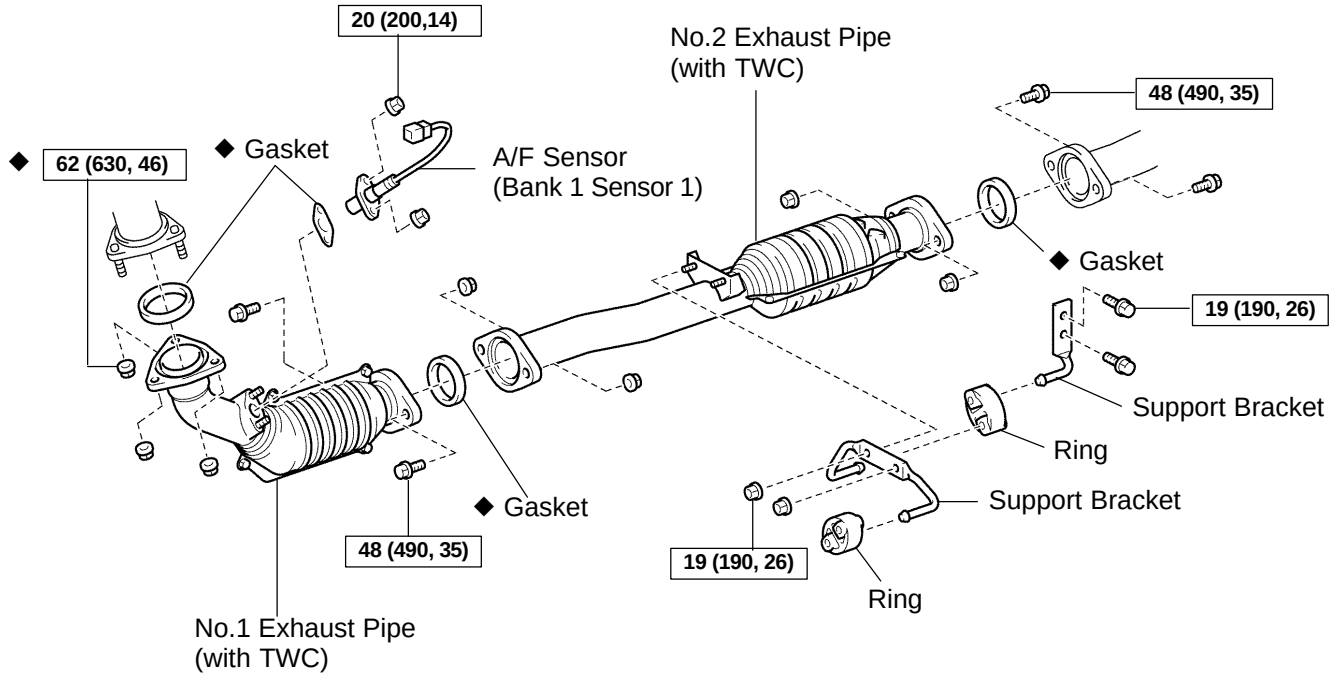

P

N·m (kgf·cm, ft·lbf) : Specified torque

◆ Non–reusable part

A11340

THREE–WAY CATALYTIC CONVERTER (TWC) SYSTEM

EC0BN–01

ON–VEHICLE INSPECTION

1. INSPECT EXHAUST PIPE ASSEMBLY

(a) Check the connections for looseness or damage.

(b) Check the clamps for weakness, cracks or damage.

2. INSPECT TWC

Check for dents or damage.

If any part of the protector is damaged or dented to the extent that it contacts the TWC, repair or replace it.

3. INSPECT TWC HEAT INSULATOR

(a) Check the heat insulator for damage.

(b) Check for adequate clearance between the TWC and heat insulator.

CO/HC

EM02I–04

INSPECTION

HINT:

This check is used only to determine whether or not the idle CO/HC complies with regulations.

1. INITIAL CONDITIONS

(a) Engine at normal operating temperature
(b) Air cleaner installed
(c) All pipes and hoses of air induction system connected
(d) All accessories switched OFF
(e) All vacuum lines properly connected

HINT:

All vacuum hoses for EGR systems, etc. should be properly connected.

(f) SFI system wiring connectors fully plugged
(g) Ignition timing check correctly
(h) Transmission in neutral position
(i) Tachometer and CO/HC meter calibrated by hand

2. START ENGINE

3. RACE ENGINE AT 2,500 RPM FOR APPROX. 180 SECONDS

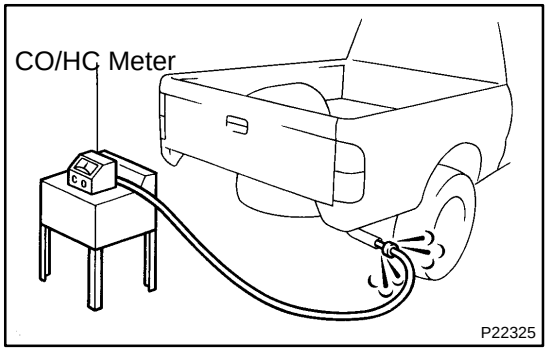

4. INSERT CO/HC METER TESTING PROBE AT LEAST 40 cm (1.3 ft) INTO TAILPIPE DURING IDLING

5. IMMEDIATELY CHECK CO/HC CONCENTRATION AT IDLE AND/OR 2,500 RPM

HINT:

When doing the 2 mode (idle and 2,500 rpm) test, these measurement order prescribed by the applicable local regulations.

6. TROUBLESHOOTING

If the CO/HC concentration does not comply with regulations, troubleshoot according in the order given below.

(1) Check heated oxygen sensor operation (See page DI–64).

(2) See the table below for possible causes, then inspect and correct the applicable causes if necessary.

CO	HC	Symptoms	Causes
Normal	High	Rough idle	1. Faulty ignition: • Incorrect timing • Fouled, shorted or improperly gapped plugs • Open or crossed high–tension cords 2. Incorrect valve clearance 3. Leaky EGR valve 4. Leaky exhaust valves 5. Leaky cylinder
Low	High	Rough idle (Fluctuating HC reading)	1. Vacuum leak: • Vacuum hose • Intake manifold • Intake chamber • PCV line • Throttle body
High	High	Rough idle (Black smoke from exhaust)	1. Clogged air filter 2. Plugged PCV valve 3. Faulty SFI system • Faulty fuel pressure regulator • Clogged fuel return line • Faulty MAF meter • Defective ECT sensor • Defective IAT sensor • Faulty engine control module (ECM) • Faulty injector

COMPRESSION

EM02J–06

INSPECTION

HINT:

If there is lack of power, excessive oil consumption or poor fuel economy, measure the compression pressure.

1. WARM UP AND STOP ENGINE

Allow the engine to warm up to normal operating temperature.

2. REMOVE INTAKE AIR CONNECTOR
(See page EM–34)

3. REMOVE IGNITION COILS (WITH IGNITER)

4. REMOVE SPARK PLUGS (See page IG–1)

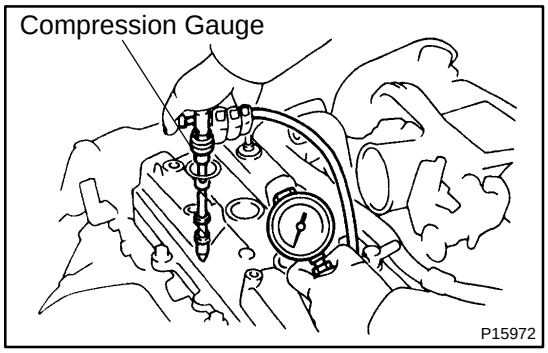

5. CHECK CYLINDER COMPRESSION PRESSURE

(a) Insert a compression gauge into the spark plug hole.

(b) Fully open the throttle.

(c) While cranking the engine, measure the compression pressure.

HINT:

Always use a fully charged battery to obtain engine speed of 250 rpm or more.

(d) Repeat steps (a) through (c) for each cylinder.

NOTICE:

This measurement must be done in as short a time as possible.

Compression pressure:
1,230 kPa (12.5 kgf/cm^2, 178 psi) or more
Minimum pressure: 880 kPa (9.0 kgf/cm^2, 127 psi)
Difference between each cylinder:
98 kPa (1.0 kgf/cm^2, 14 psi) or less

(e) If the cylinder compression in one or more cylinders is low, pour a small amount of engine oil into the cylinder through the spark plug hole and repeat steps (a) through (c) for cylinders with low compression.

- If adding oil helps the compression, chances are that the piston rings and/or cylinder bore are worn or damage.
- If pressure stays low, a valve may be sticking or seating is improper, or there may be leakage past the gasket.

6. REINSTALL SPARK PLUGS

Torque: 19 N·m (200 kgf·cm, 14 ft·lbf)

7. REINSTALL IGNITION COILS (WITH IGNITER)

8. REINSTALL INTAKE AIR CONNECTOR
(See page EM–57)

CYLINDER BLOCK

COMPONENTS

EM033–05

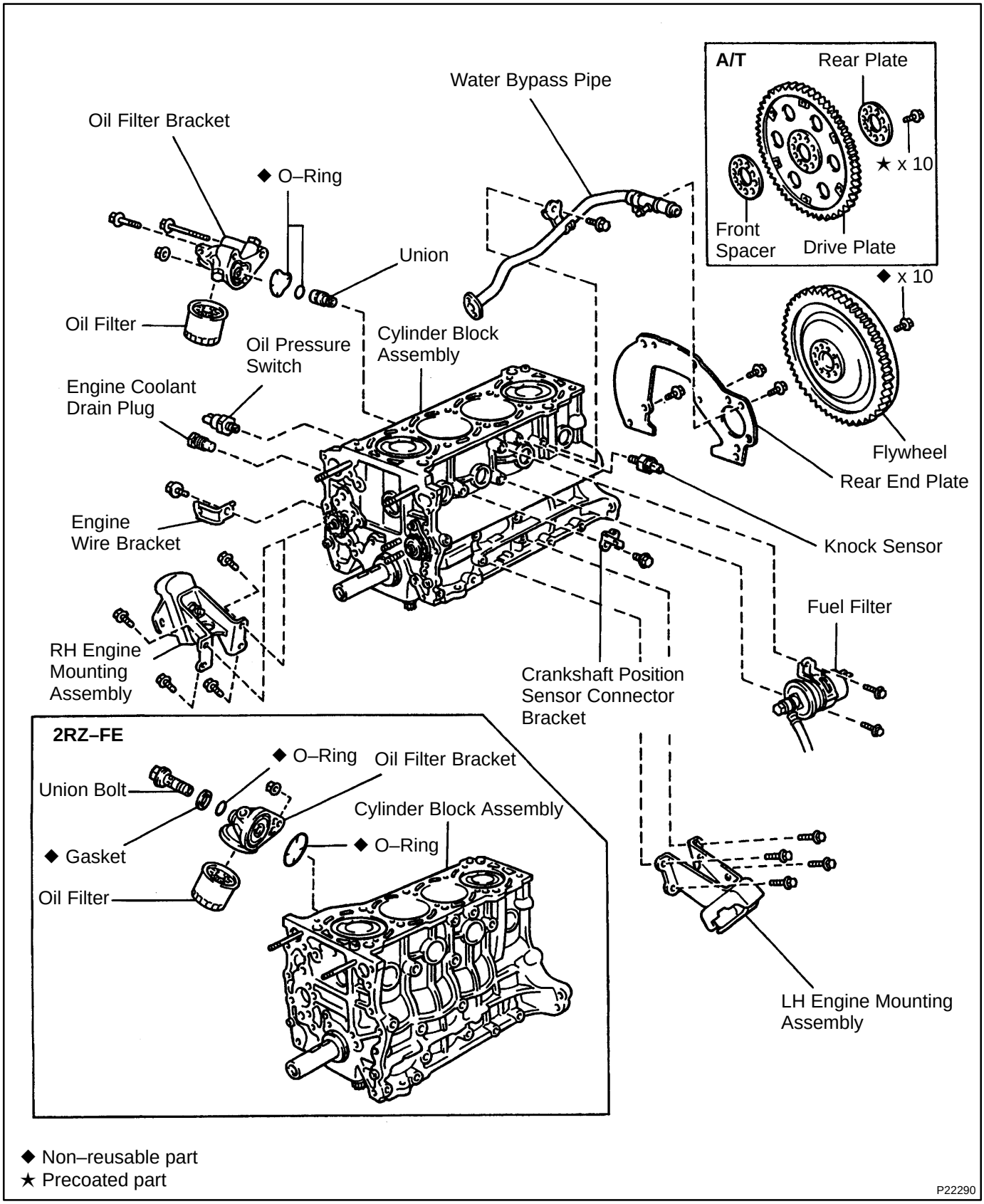

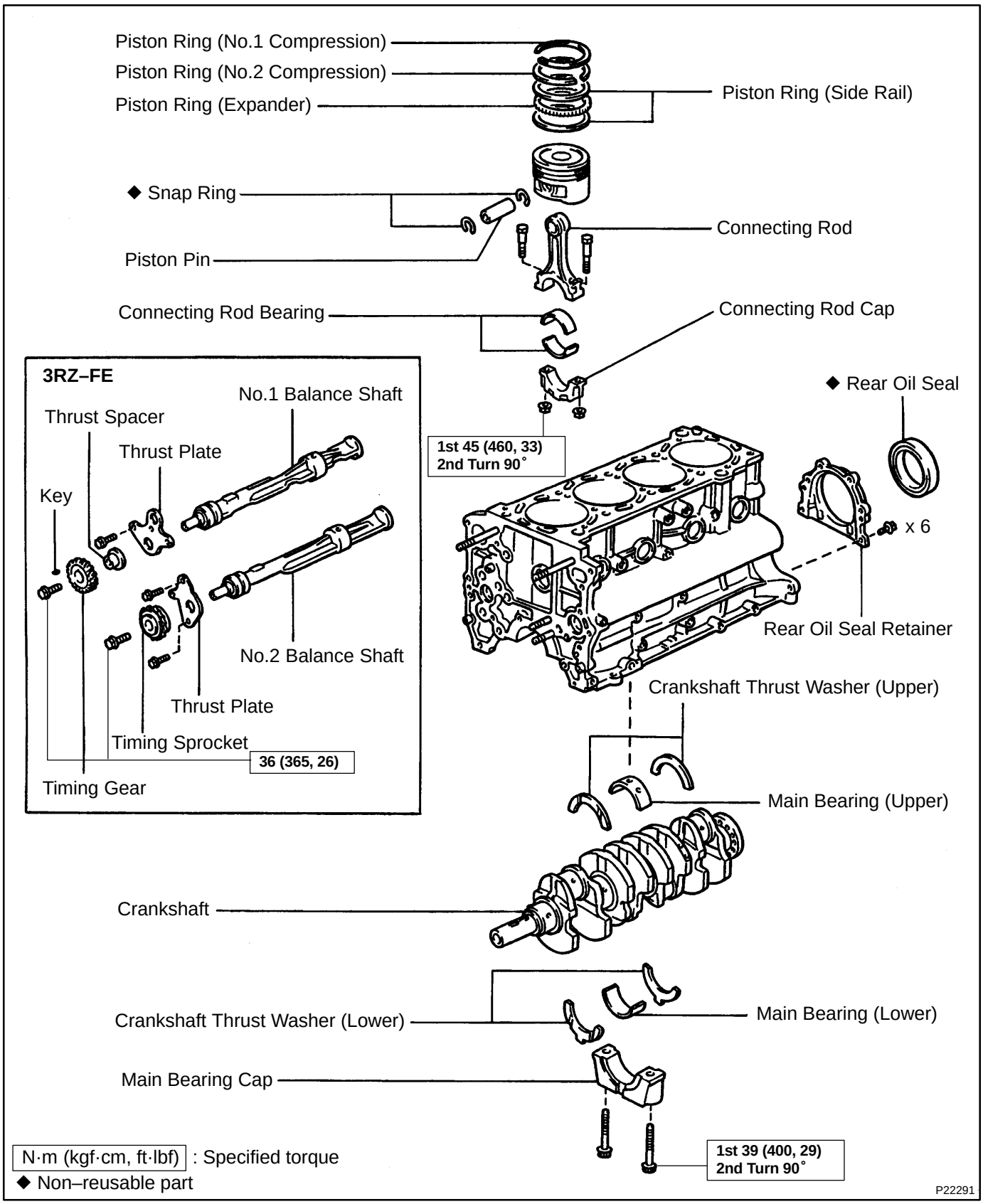
Piston Ring (No.1 Compression)
Piston Ring (No.2 Compression)
Piston Ring (Expander)
Piston Ring (Side Rail)
◆ Snap Ring
Piston Pin
Connecting Rod
Connecting Rod Bearing
Connecting Rod Cap
1st 45 (460, 33)
2nd Turn 90°
3RZ–FE
No.1 Balance Shaft
Thrust Spacer
Thrust Plate
Key
No.2 Balance Shaft
Thrust Plate
Timing Sprocket
36 (365, 26)
Timing Gear
◆ Rear Oil Seal
x 6
Rear Oil Seal Retainer
Crankshaft Thrust Washer (Upper)
Main Bearing (Upper)
Crankshaft
Crankshaft Thrust Washer (Lower)
Main Bearing (Lower)
Main Bearing Cap
1st 39 (400, 29)
2nd Turn 90°
N·m (kgf·cm, ft·lbf) : Specified torque
◆ Non–reusable part
P22291

EM16Y–02

DISASSEMBLY

1. M/T:
REMOVE FLYWHEEL

Remove the 10 bolts and flywheel.

2. A/T:
REMOVE DRIVE PLATE

Remove the 10 bolts, front spacer, drive plate and rear plate.

3. REMOVE REAR END PLATE

Remove the 3 bolts and rear end plate.

4. INSTALL ENGINE TO ENGINE STAND FOR DISASSEMBLY

5. REMOVE CYLINDER HEAD (See page EM–34)

6. REMOVE TIMING CHAINS, GEARS AND SPROCKET (See page EM–17)

7. REMOVE FUEL FILTER

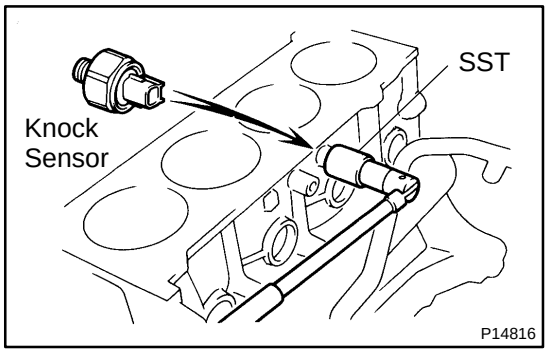

8. REMOVE KNOCK SENSOR

Using SST, remove the knock sensor.

SST 09816–30010

9. REMOVE WATER BYPASS PIPE

Remove the bolt and water bypass pipe.

10. REMOVE OIL FILTER (See page LU–2)

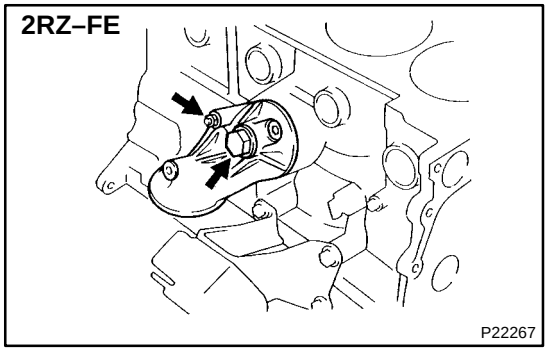

11. 2RZ–FE:
REMOVE OIL FILTER BRACKET

(a) Remove the nut, union bolt, gasket and oil filter bracket.

(b) Remove the O–ring from the union bolt.

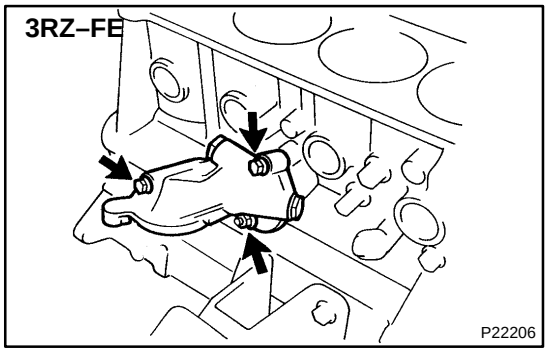

12. 3RZ–FE:
REMOVE OIL FILTER BRACKET

(a) Remove the 2 bolts, nut, oil filter bracket and O–ring.

(b) Using a 14 mm hexagon wrench, remove the union and O–ring.

13. REMOVE ENGINE COOLANT DRAIN PLUG

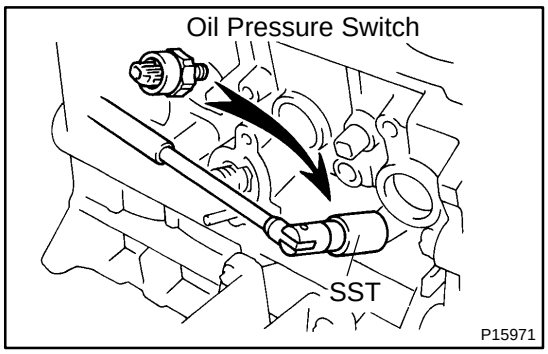

14. REMOVE OIL PRESSURE SWITCH

Using SST, remove the oil pressure switch.

SST 09816–30010

15. REMOVE RH AND LH ENGINE MOUNTING ASSEMBLIES

Remove the 4 bolts and mounting assembly.

16. REMOVE ENGINE WIRE BRACKET

17. REMOVE CRANKSHAFT POSITION SENSOR CONNECTOR BRACKET

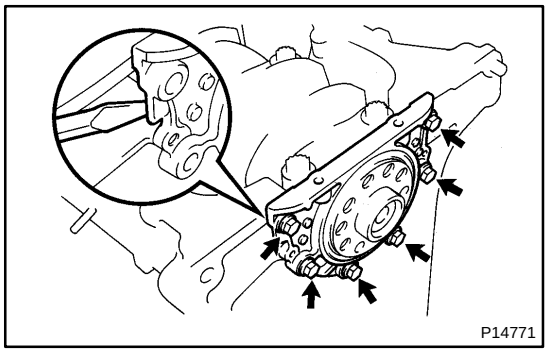

18. REMOVE REAR OIL SEAL RETAINER

(a) Remove the 6 bolts.

(b) Using a screwdriver, remove the oil seal retainer by prying the portions between the oil seal retainer and cylinder block.

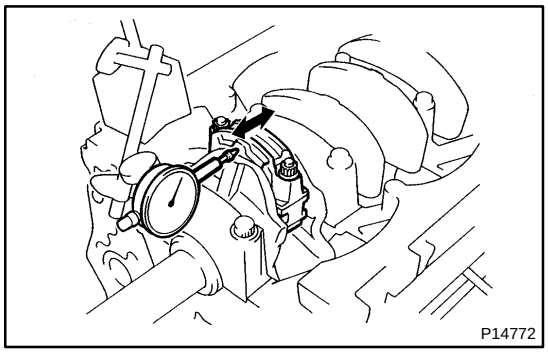

19. CHECK CONNECTING ROD THRUST CLEARANCE

Using a dial indicator, measure the thrust clearance while moving the connecting rod back and forth.

Standard thrust clearance:
0.160 – 0.312 mm (0.0063 – 0.0123 in.)
Maximum thrust clearance: 0.35 mm (0.0138 in.)

If the thrust clearance is greater than maximum, replace the connecting rod assembly. If necessary, replace the crankshaft.

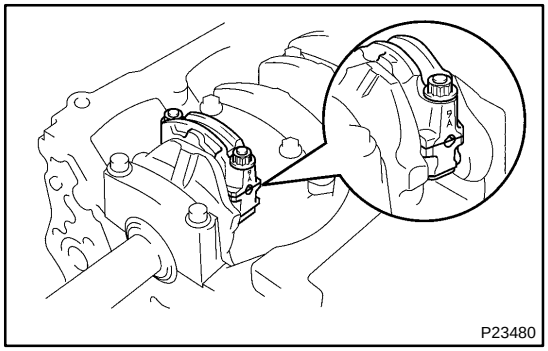

20. REMOVE CONNECTING ROD CAPS AND CHECK OIL CLEARANCE

(a) Check the match marks on the connecting rod and cap are aligned to ensure correct reassembly.

(b) Remove the connecting rod cap nuts.

(c) Using a plastic–faced hammer, lightly tap the connecting rod bolts and lift off the connecting rod cap.

HINT:

Keep the lower bearing inserted with the connecting rod cap.

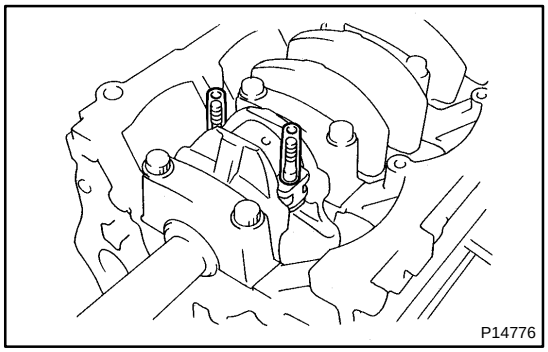

(d) Cover the connecting rod bolts with a short piece of hose to protect the crankshaft from damage.

(e) Clean the crank pin and bearing.

(f) Check the crank pin and bearing for pitting and scratches.

If the crank pin or bearing is damaged, replace the bearings. If necessary, grind or replace the crankshaft.

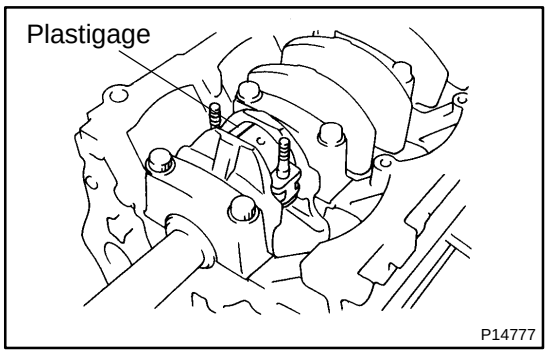

(g) Lay a strip of Plastigage across the crank pin.
(h) Install the connecting rod cap with the 2 nuts (See page EM–100).

NOTICE:
Do not turn the crankshaft.

(i) Remove the 2 nuts and connecting rod cap. (See procedure (b) and (c) above)

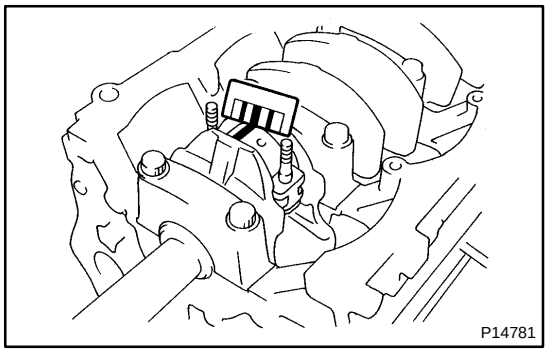

(j) Measure the Plastigage at its widest point.
Standard oil clearance:

STD	0.030 – 0.055 mm (0.0012 – 0.0022 in.)
U/S 0.25	0.030 – 0.071 mm (0.0012 – 0.0026 in.)

Maximum oil clearance: 0.10 mm (0.0039 in.)

If the oil clearance is greater than maximum, replace the bearings. If necessary, grind or replace the crankshaft.

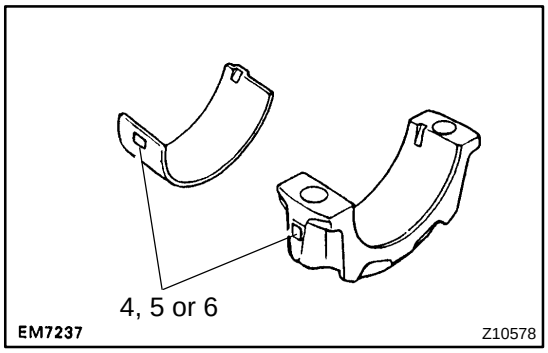

HINT:
If using a standard bearing, replace with one having the same number as marked on the bearing cap. There are 3 sizes of standard bearings, marked ”4”, ”5” and ”6” accordingly.

Reference
Standard sized bearing center wall thickness:

Mark ”4”	1.482 – 1.485 mm (0.0583 – 0.0585 in.)
Mark ”5”	1.485 – 1.488 mm (0.0585 – 0.0586 in.)
Mark ”6”	1.488 – 1.491 mm (0.0586 – 0.0587 in.)

(k) Completely remove the Plastigage.

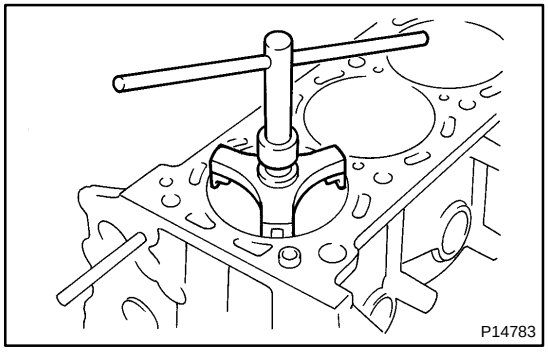

21. REMOVE PISTON AND CONNECTING ROD ASSEMBLIES

(a) Using a ridge reamer, remove the all carbon from the top of the cylinder.
(b) Push the piston, connecting rod assembly and upper bearing through the top of the cylinder block.

HINT:
- Keep the bearings, connecting rod and cap together.
- Arrange the piston and connecting rod assemblies in correct order.

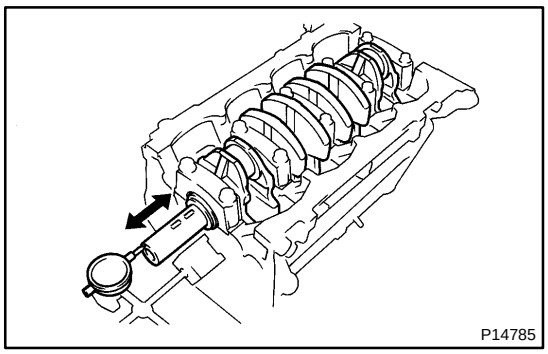

22. CHECK CRANKSHAFT THRUST CLEARANCE

Using a dial indicator, measure the thrust clearance while prying the crankshaft back and forth with a screwdriver.

Standard thrust clearance:
0.020 – 0.220 mm (0.0008 – 0.0087 in.)
Maximum thrust clearance: 0.30 mm (0.0118 in.)

If the thrust clearance is greater than maximum, replace the thrust washers as a set.

Thrust washer thickness:
2.440 – 2.490 mm (0.0961 – 0.0980 in.)

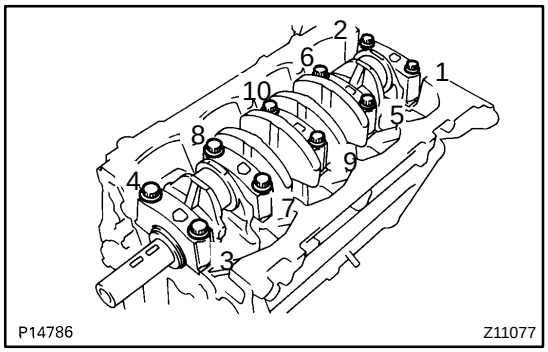

23. REMOVE MAIN BEARING CAPS AND CHECK OIL CLEARANCE

(a) Uniformly loosen and remove the main bearing cap bolts in several passes, in the sequence shown.

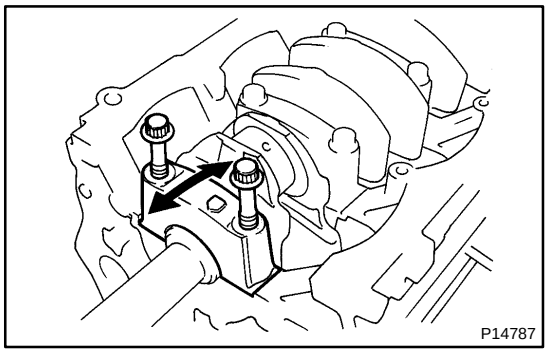

(b) Using the removed main bearing cap bolts, pry the main bearing cap back and forth, and remove the main bearing caps, lower bearings and (No.3 main bearing cap only) lower thrust washers.

HINT:

- Keep the lower bearing and main bearing cap together.
- Arrange the main bearing caps and lower thrust washers in correct order.

(c) Lift out the crankshaft.

HINT:

Keep the upper bearings and upper thrust washers together with the cylinder block.

(d) Clean each main journal and bearing.

(e) Check each main journal and bearing for pitting and scratches.

If the journal or bearing is damaged, replace the bearings.
If necessary, grind or replace the crankshaft.

(f) Place the crankshaft on the cylinder block.

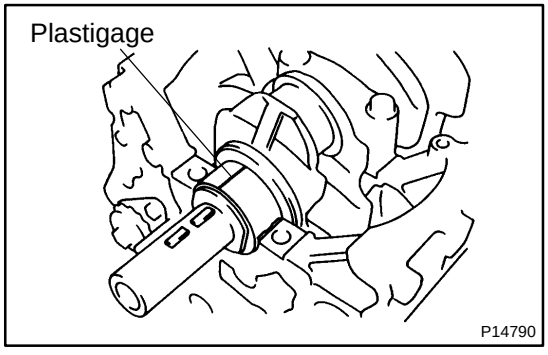

(g) Lay a strip of Plastigage across each journal.

(h) Install the main bearing caps. (See page EM–100)

NOTICE:
Do not turn the crankshaft.

(i) Remove the main bearing caps. (See procedure (a) and (b) above)

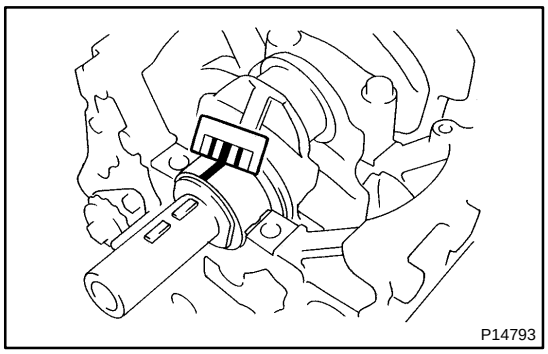
P14793

(j) Measure the Plastigage at its widest point.

Oil clearance:

STD	No.3	0.030 – 0.055 mm (0.0012 – 0.0022 in.)
	Others	0.024 – 0.049 mm (0.0009 – 0.0019 in.)
U/S 0.25	No.3	0.030 – 0.070 mm (0.0012 – 0.0028 in.)
	Others	0.025 – 0.065 mm (0.0010 – 0.0026 in.)

Maximum clearance: 0.10 mm (0.0039 in.)

If the oil clearance is greater than maximum, replace the bearings. If necessary, grind or replace the crankshaft.

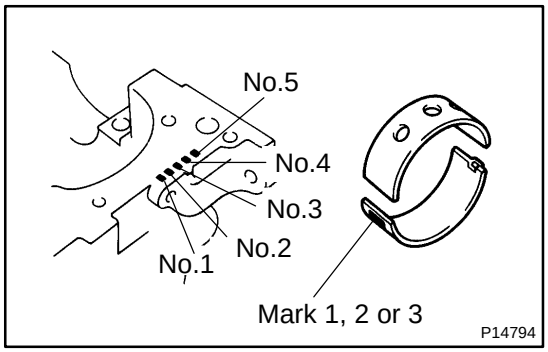

P14794

HINT:

If using a standard bearing, replace with one having the same number as marked on the block. There are 3 sizes of standard bearings, marked ”1”, ”2” and ”3” accordingly.

Reference:

Standerd bearing center wall thickness:

Mark ”1”	1.987 – 1.990 mm (0.0782 – 0.0783 in.)
Mark ”2”	1.991 – 1.993 mm (0.0784 – 0.0785 in.)
Mark ”3”	1.994 – 1.996 mm (0.0785 – 0.0786 in.)

(k) Completely remove the Plastigage.

24. REMOVE CRANKSHAFT

(a) Lift out the crankshaft.

(b) Remove the upper main bearings and upper thrust washers from the cylinder block.

HINT:

Arrange the main bearings and thrust washers in correct order.

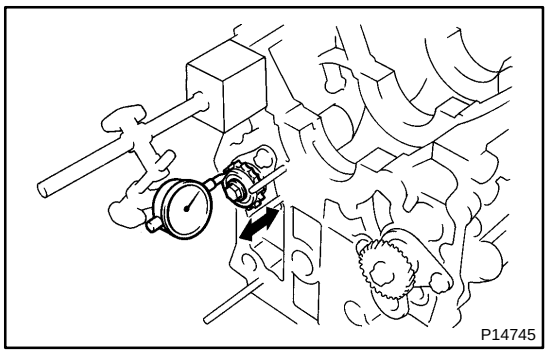
P14745

25. CHECK THRUST CLEARANCES OF NO.1 (RH) AND NO.2 (LH) BALANCE SHAFTS

Using a dial indicator, measure the thrust clearance while moving the balance shaft back and forth.

Standard thrust clearance:

0.07 – 0.13 mm (0.0027 – 0.0051 in.)

Maximum thrust clearance: 0.20 mm (0.0079 in.)

If the thrust clearance is greater than maximum, replace the balance shaft thrust washer.

If necessary, replace the balance shaft.

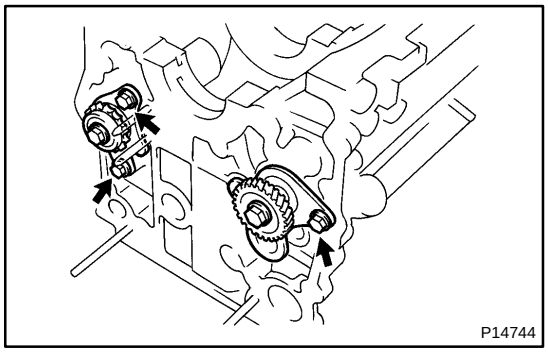
P14744

26. REMOVE NO.1 (RH) AND NO.2 (LH) BALANCE SHAFTS

(a) Remove the 1 bolt from the No.1 balance shaft.

(b) Remove the 2 bolts from the No.2 balance shaft.

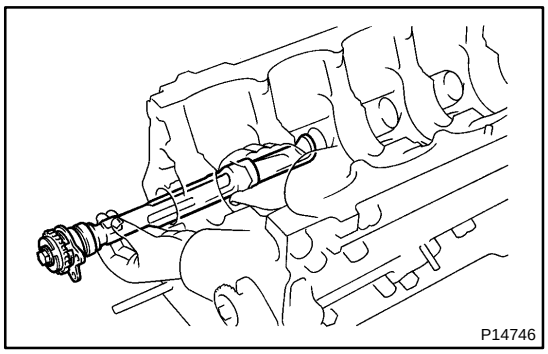

(c) Remove the balance shafts.

NOTICE:

When removing the balance shaft make sure you support the balance shaft with both hands and avoid scratching the balance shaft bearing on the cylinder block side.

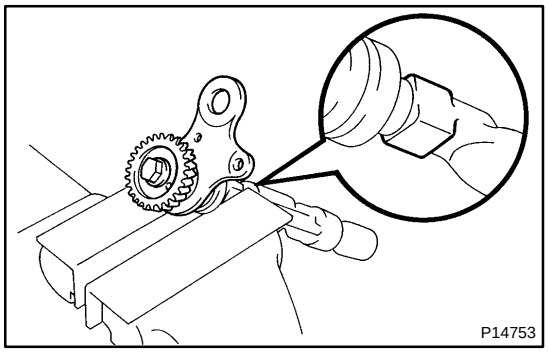

27. DISASSEMBLE NO.1 (RH) BALANCE SHAFT

(a) Mount the hexagon wrench head portion of the balance shaft in a vise.

NOTICE:

Be careful not to damage the balance shaft.

(b) Remove the balance shaft timing gear with the bolt.

(c) Remove the No.1 balance shaft thrust plate and the balance shaft thrust spacer.

(d) Remove the key.

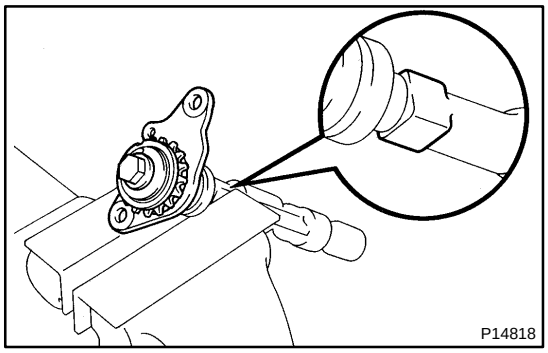

28. DISASSEMBLE NO.2 (LH) BALANCE SHAFT

(a) Mount the hexagon wrench head portion of the balance shaft in a vise.

NOTICE:

Be careful not to damage the balance shaft.

(b) Remove the balance shaft timing sprocket with the bolt.

(c) Remove the No.2 balance shaft thrust prate.

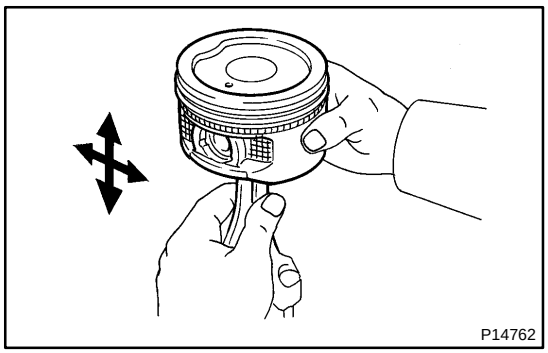

29. CHECK FIT BETWEEN PISTON AND PISTON PIN

Try to move the piston back and forth on the piston pin.

If any movement is felt, replace the piston and pin as a set.

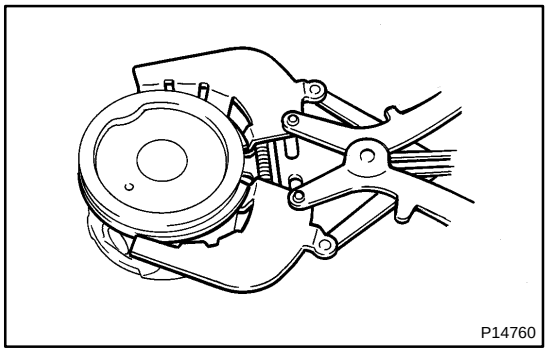

30. REMOVE PISTON RINGS

(a) Using a piston ring expander, remove the 2 compression rings.

(b) Remove the 2 side rails and oil ring by hand.

HINT:

Arrange the rings in correct order only.

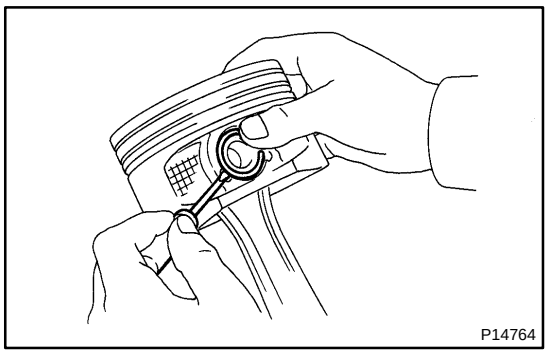

31. DISCONNECT CONNECTING ROD FROM PISTON

(a) Using a small screwdriver, pry out the 2 snap rings.

(b) Gradually heat the piston to 80 – 90˚C (176 – 194˚F).

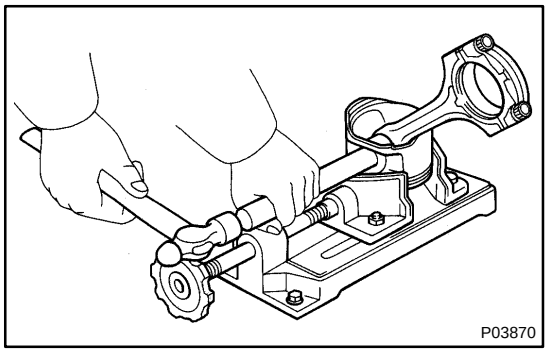

(c) Using plastic–faced hammer and brass bar, lightly tap out the piston pin and remove the connecting rod.

HINT:

- The piston and pin are a matched set.
- Arrange the pistons, pins, rings, connecting rods and bearings correct order.

EM16Z–02

INSPECTION

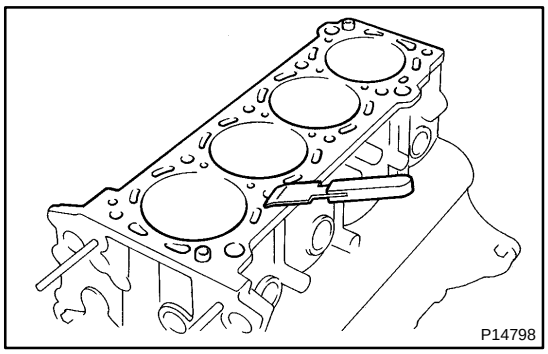

1. REMOVE GASKET MATERIAL

(a) Remove the gasket material.
Using a gasket scraper, remove all the gasket material from the top surface of the cylinder block.

(b) Clean the cylinder block.
Using a soft brush and solvent, thoroughly clean the cylinder block.

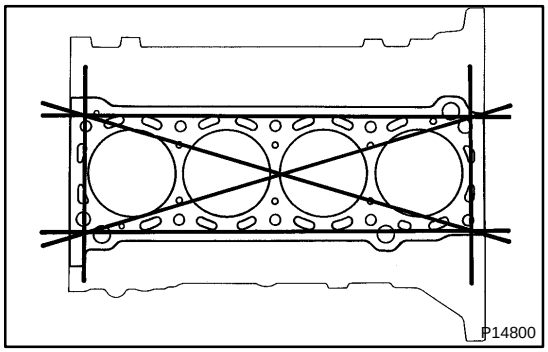

2. INSPECT CYLINDER BLOCK

(a) Inspect for flatness.
Using a precision straight edge and thickness gauge, measure the surfaces contacting the cylinder head gasket for warpage.
Maximum warpage: 0.05 mm (0.0020 in.)

If warpage is greater than maximum, replace the cylinder block.

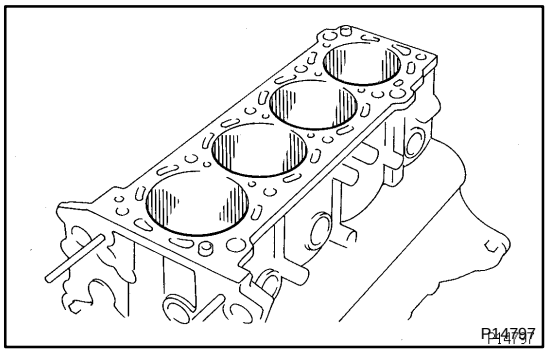

(b) Visually check the cylinder for vertical scratches.

If deep scratches are present, rebore all the 4 cylinders. If necessary, replace the cylinder block.

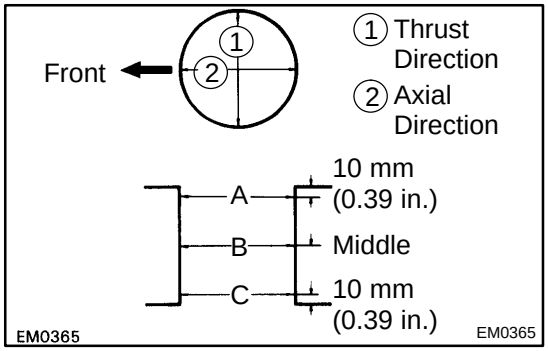

(c) Inspect the cylinder bore diameter.
Using a cylinder gauge, measure the cylinder bore diameter at positions A, B and C in the thrust and axial directions.
Standard diameter:
94.990 – 95.003 mm (3.7400 – 3.7403 in.)
Maximum diameter: 95.06 mm (3.7425 in.)

If the diameter is greater than maximum, rebore all the 4 cylinders. If necessary, replace the cylinder block.

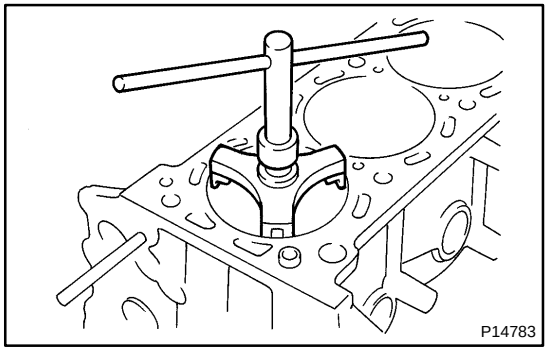

3. REMOVE CYLINDER RIDGE

If the wear is less than 0.2 mm (0.008 in.), using a ridge reamer, grind the top of the cylinder.

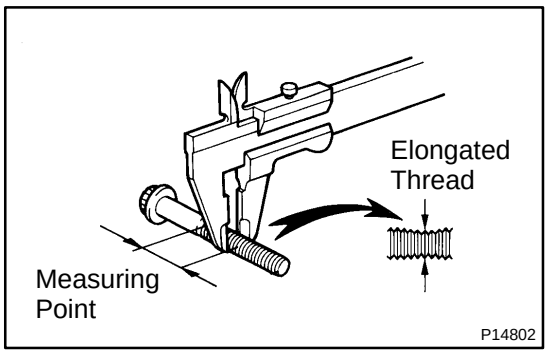

4. INSPECT MAIN BEARING CAP BOLTS

Using vernier calipers, measure the minimum diameter of the elongated thread at the measuring point.

Standard outside diameter:
10.76 – 10.97 mm (0.4236 – 0.4319 in.)
Minimum outside diameter: 10.40 mm (0.4094 in.)

If the diameter is less than minimum, replace the bolt.

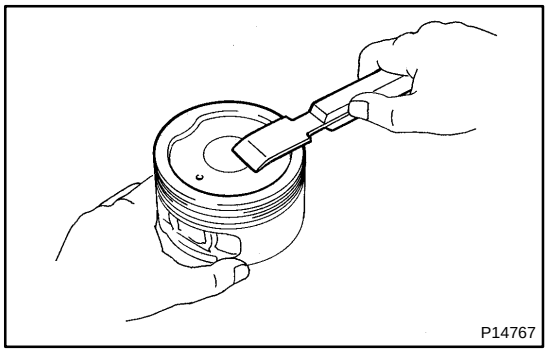

5. CLEAN PISTON

(a) Using a gasket scraper, remove the carbon from the piston top.

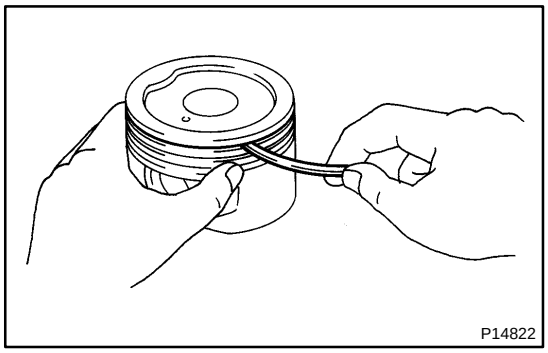

(b) Using a groove cleaning tool or broken ring, clean the piston ring grooves.

(c) Using solvent and a brush, thoroughly clean the piston.

NOTICE:
Do not use a wire brush.

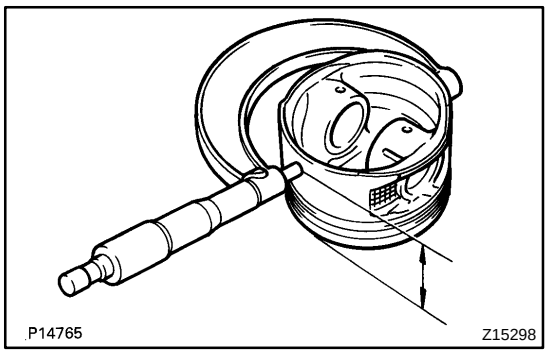

6. INSPECT PISTON AND CONNECTING ROD

(a) Inspect the piston oil clearance.

(1) Using a micrometer, measure the piston diameter at right angles to the piston pin center line, 35.5 mm (1.40 in.) for 2RZ–FE or 37.5 mm (1.47 in.) for 3RZ–FE from the piston head.

Piston diameter:

STD	2RZ–FE	94.923 – 94.933 mm (3.7371 – 3.7375 in.)
	3RZ–FE	94.933 – 94.943 mm (3.7375 – 3.7379 in.)
O/S 0.50	2RZ–FE	95.423 – 95.433 mm (3.7568 – 3.7572 in.)
	3RZ–FE	95.433 – 95.443 mm (3.7572 – 3.7576 in.)

(2) Measure the cylinder bore diameter in the thrust directions.

(3) Subtract the piston diameter measurement from the cylinder bore diameter measurement.

Standard oil clearance:

2RZ–FE	0.057 – 0.080 mm (0.0022 – 0.0031 in.)
3RZ–FE	0.047 – 0.070 mm (0.0019 – 0.0028 in.)

If the oil clearance is greater than maximum, replace all the 4 pistons and rebore all the 4 cylinders. If necessary, replace the cylinder block.
HINT:
Use new cylinder block:
Use a piston with the same number mark as the cylinder bore diameter marked on the cylinder block.

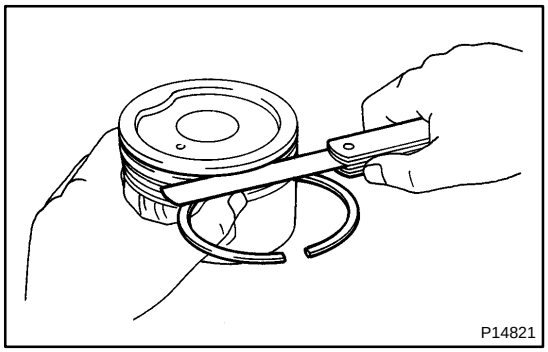

(b) Inspect the piston ring groove clearance.
Using a feeler gauge, measure the clearance between new piston ring and the wall of the piston ring groove.
Ring groove clearance:

No.1	0.020 – 0.070 mm (0.0008 – 0.0028 in.)
No.2	0.030 – 0.070 mm (0.0012 – 0.0028 in.)

If the clearance is not as specified, replace the piston.

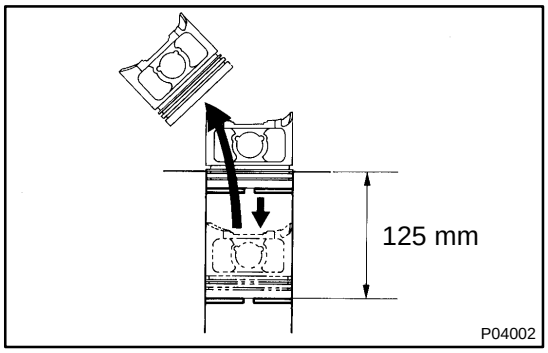

(c) Inspect the piston ring end gap.
(1) Insert the piston ring into the cylinder bore.
(2) Using a piston, push the piston ring a little beyond the bottom of the ring travel, 125 mm (4.92 in.) from the top of the cylinder block.

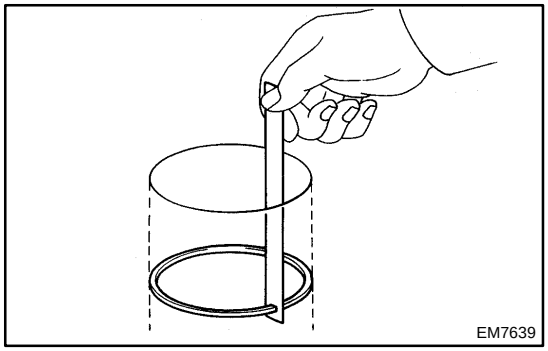

(3) Using a feeler gauge, measure the end gap.
Ring end gap:

No.1	0.300 – 0.400 mm (0.0118 – 0.0157 in.)
No.2	0.400 – 0.500 mm (0.0157 – 0.0197 in.)

If the end gap is not as specified, replace the piston ring. If the end gap is not as specified, even with a new piston ring, rebore all the 4 cylinders or replace the cylinder block.

(d) Inspect the piston pin fit.
At 80 – 90˚C (176 – 194˚F), you should be able to push the piston pin into the piston pin hole with your thumb.

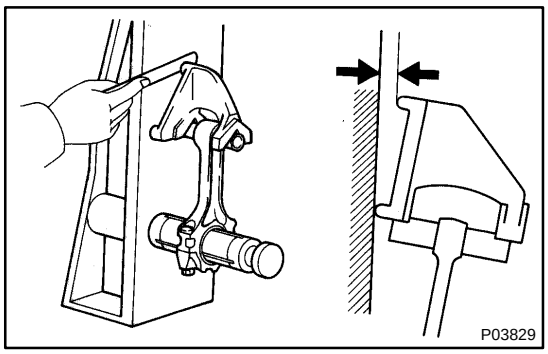

(e) Using a rod aligner and feeler gauge, check the connecting rod alignment.

(1) Check for bend.

Maximum bend:

0.05 mm (0.0020 in.) per 100 mm (3.94 in.)

If bend is greater than maximum, replace the connecting rod assembly.

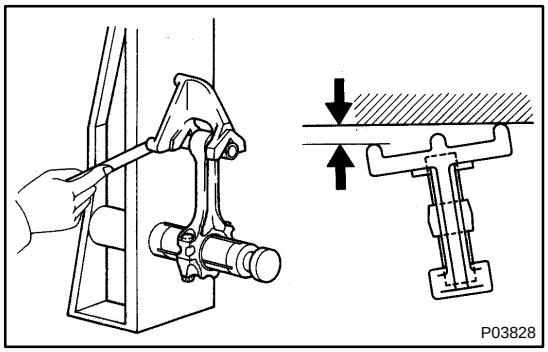

(2) Check for twist

Maximum twist:

0.15 mm (0.0059 in.) per 100 mm (3.94 in.)

If twist is greater than maximum, replace the connecting rod assembly.

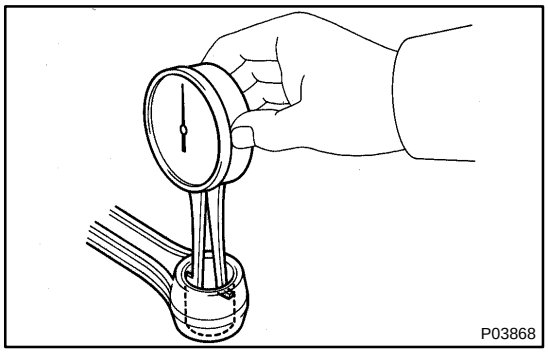

(f) Inspect the piston pin oil clearance.

(1) Using a caliper gauge, measure the inside diameter of the connecting rod bushing.

Bushing inside diameter:

24.008 – 24.017 mm (0.9452 – 0.9455 in.)

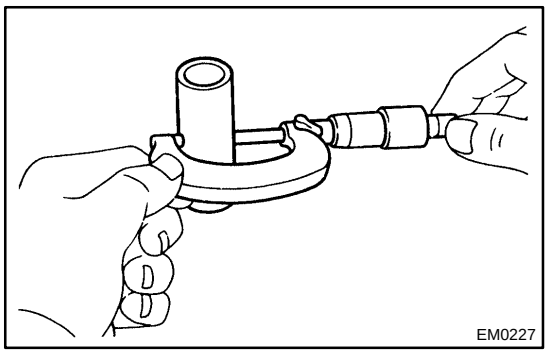

(2) Using a micrometer, measure the pin diameter.

Piston pin diameter:

24.000 – 24.009 mm (0.9449 – 0.9452 in.)

(3) Subtract the piston pin diameter measurement from the bushing inside diameter measurement.

Standard oil clearance:

0.005 – 0.011 mm (0.0002 – 0.0004 in.)

Maximum oil clearance: 0.015 mm (0.0006 in.)

If the oil clearance is greater than maximum, replace the bushing (See page EM–97).

If necessary, replace the piston and piston pin as a set.

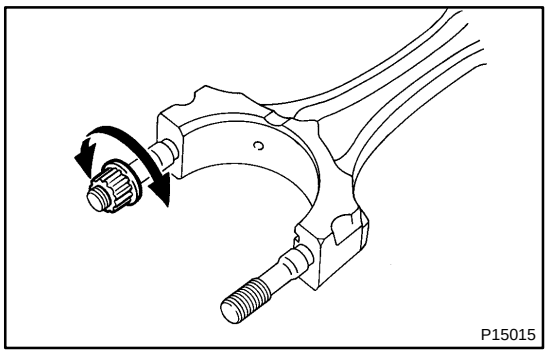
P15015

(g) Inspect the connecting rod bolts.

(1) Install the cap nut to the connecting rod bolt. Check that the cap nut can be turned easily by hand to the end of the thread.

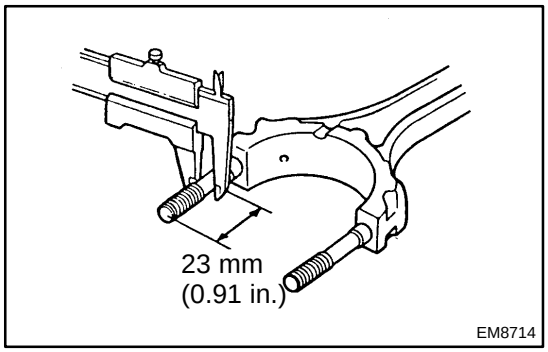

EM8714

(2) If the cap nut cannot be turned easily, measure the minimum outside diameter of the connecting rod bolt with vernier calipers.

Standard outside diameter:
7.80 – 7.90 mm (0.3071 – 0.3110 in.)
Minimum outside diameter: 7.60 mm (0.2992 in.)

HINT:
If the location of minimum diameter cannot be judged by visual inspection, measure the outer diameter at the location shown in the illustration.
If the outside diameter is less than limit, replace the connecting rod bolt and nut as a set.

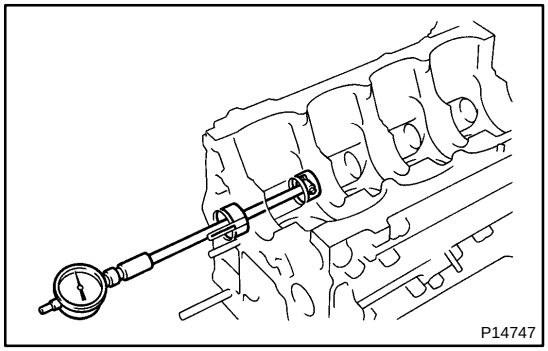
P14747

7. 3RZ–FE:
INSPECT NO.1 (RH) AND NO.2 (LH) BALANCE SHAFTS

(a) Using a cylinder gauge, measure the inside diameter of the balance shaft bearing.

Bearing inside diameter (from front side):

No.1 (RH)	38.025 – 38.045 mm (1.4970 – 1.4978 in.)
No.2 (LH)	37.525 – 37.545 mm (1.4774 – 1.4781 in.)

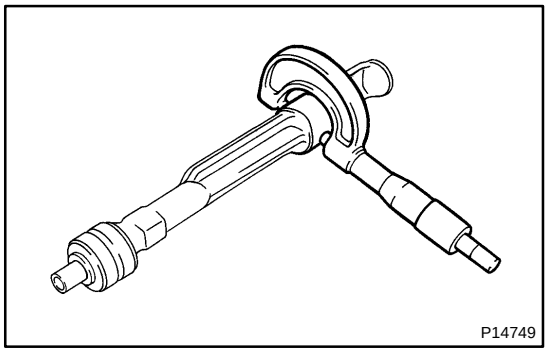
P14749

(b) Using a micrometer, measure the diameter of the balance shaft main journals.

Main journal diameter (from front side):

No.1 (RH)	37.969 – 38.985 mm (1.4948 – 1.4955 in.)
No.2 (LH)	37.449– 37.465 mm (1.4744 – 1.4750 in.)

(c) Subtract the balance shaft main journal diameter measurement from the balance shaft bearing inside diameter measurement.

Standard oil clearance:

No.1 (RH)	0.040 – 0.076 mm (0.0016 – 0.0031 in.)
No.2 (LH)	0.060 – 0.096 mm (0.0024 – 0.0038 in.)

Maximum oil clearance: 0.15 mm (0.0059 in.)

If the clearance is greater than maximum, replace the cylinder block and balance shaft.

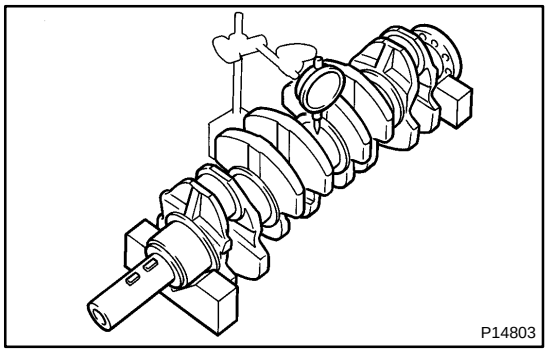

8. INSPECT CRANKSHAFT

(a) Inspect for circle runout.

(1) Place the crankshaft on V–blocks.

(2) Using a dial indicator, measure the circle runout at the center journal.

Maximum circle runout: 0.03 mm (0.0012 in.)

If the circle runout is greater than maximum, replace the crankshaft.

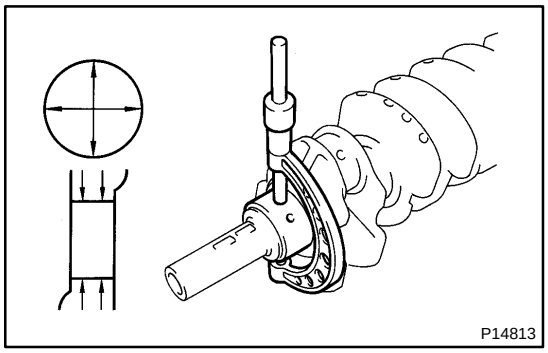

(b) Inspect the main journals and crank pins.

(1) Using a micrometer, measure the diameter of each main journal and crank pin.

Main journal diameter:

STD	No.3	59.981 – 59.994 mm (2.2615 – 2.3620 in.)
	Others	59.987 – 60.000 mm (2.3617 – 2.3622 in.)
U/S 0.25	No.3	59.740 – 59.750 mm (2.3520 – 2.3524 in.)
	Others	59.745 – 59.755 mm (2.3522 – 2.3526 in.)

Crank pin diameter:

STD	52.987 – 53.000 mm (2.0861 – 2.0866 in.)
U/S 0.25	52.745 – 52.755 mm (2.0766 – 2.0770 in.)

If the diameter is not as specified, check the oil clearance (See page EM–84).

If necessary, grind or replace the crankshaft.

(2) Check each main journal and crank pin for taper and out–of–round as shown.

Maximum taper and out–of–round:
0.005 mm (0.0002 in.)

If the taper and out–of–round is greater than maximum, replace the crankshaft.

9. IF NECESSARY, GRIND AND HONE MAIN JOURNALS AND/OR CRANK PINS

Grind and hone the main journals and/or crank pins to the finished undersized diameter (See procedure in step 6). Install new main journal and/or crank pin undersized bearings.

EM171–01

REASSEMBLY

HINT:

- Thoroughly clean all parts to be assembled.
- Before installing the parts, apply fresh engine oil to all sliding and rotation surfaces.
- Replace all gaskets, O–rings and oil seals with new parts.

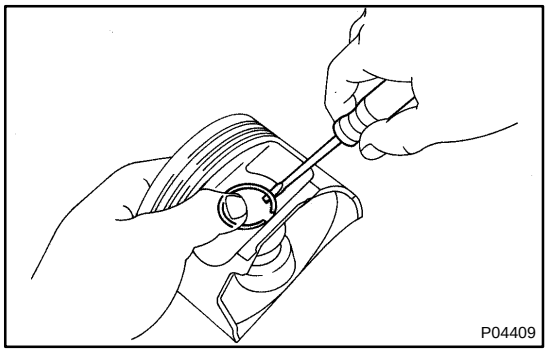

1. ASSEMBLE PISTON AND CONNECTING ROD

(a) Install a new snap ring on one side of the piston pin hole.

(b) Gradually heat the piston to 80 – 90˚C (176 – 194˚F).

(c) Coat the piston pin with engine oil.

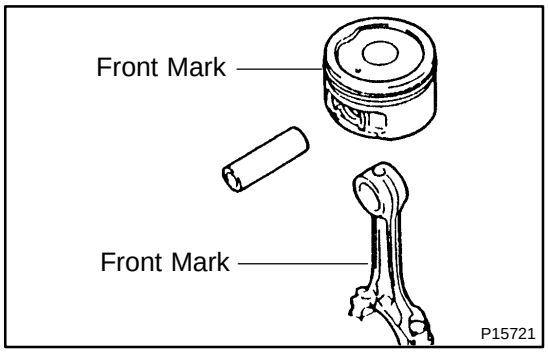

(d) Align the front marks of the piston and connecting rod, and push in the piston pin with your thumb.

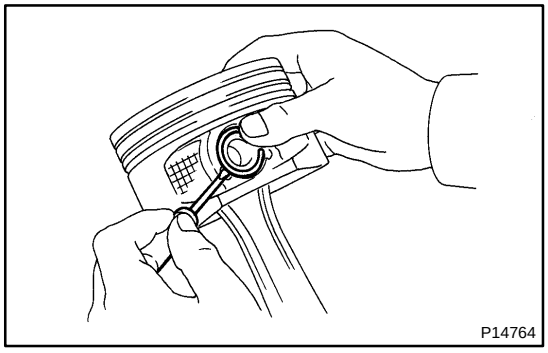

(e) Install a new snap ring on the other side of the piston pin hole.

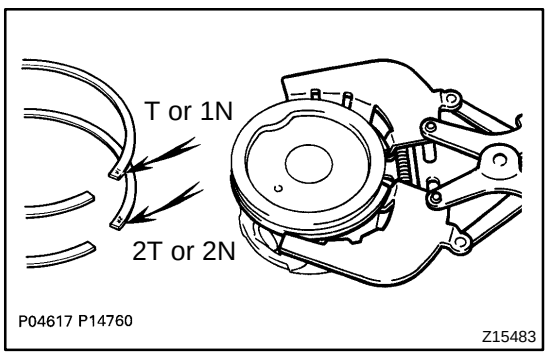

2. INSTALL PISTON RINGS

(a) Install the oil ring expander and 2 side rails by hand.

(b) Using a piston ring expander, install the 2 compression rings with the code mark facing upward.

Code mark:

No.1	T or 1N
No.3	2T or 2N

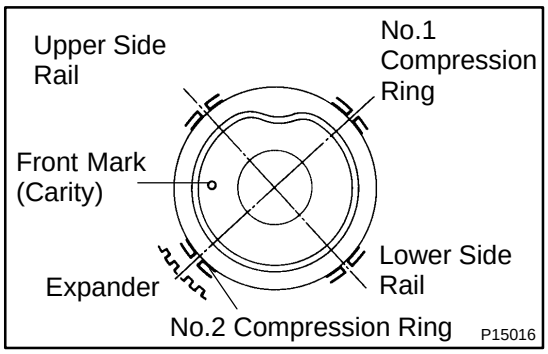

(c) Position the piston rings so that the ring ends are as shown.

NOTICE:

Do not align the ring ends.

3. INSTALL BEARINGS

(a) Align the bearing claw with the groove of the connecting rod or connecting rod cap.

(b) Install the bearings in the connecting rod and connecting rod cap.

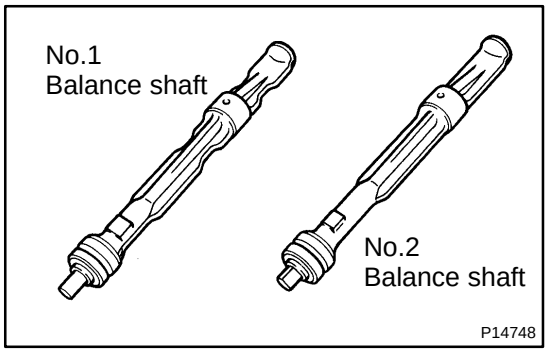

4. ASSEMBLY NO.1 (RH) BALANCE SHAFT

HINT:

- No.1 balance shaft has indentations.
- No.3 balance shaft has no indentations.

(a) Mount the hexagon wrench head portion of the No.1 balance shaft in a vise.

NOTICE:

Be careful not to damage the balance shaft.

(b) Install the No.1 balance shaft thrust plate.

(c) Install the balance shaft thrust spacer.

(d) Install the key.

(e) Install the balance shaft timing gear with the bolt.

Torque: 36 N·m (365 kgf·cm, 26 ft·lbf)

5. ASSEMBLY NO.2 (LH) BALANCE SHAFT

HINT:

- No.1 balance shaft has indentations.
- No.2 balance shaft has no indentations.

(a) Mount the hexagon wrench head portion of the No.2 balance shaft in a vise.

NOTICE:

Be careful not to damage the balance shaft.

(b) Install the No.2 balance shaft thrust plate.

(c) Install the balance shaft timing sprocket with the bolt.

Torque: 36 N·m (365 kgf·cm, 26 ft·lbf)

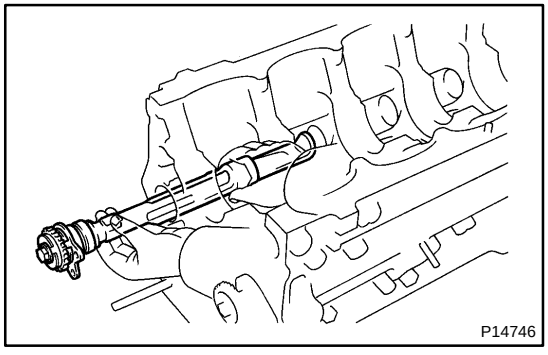

6. INSTALL BALANCE SHAFTS

(a) Install the balance shafts.

NOTICE:

When installing the balance shaft make sure you support the balance shaft with both hands and avoid scratching the balance shaft bearing on the cylinder block side.

(b) Install the No.1 balance shaft with the bolt.

(c) Install the No.2 balance shaft with the 2 bolts.

Torque: 18 N·m (185 kgf·cm, 13 ft·lbf)

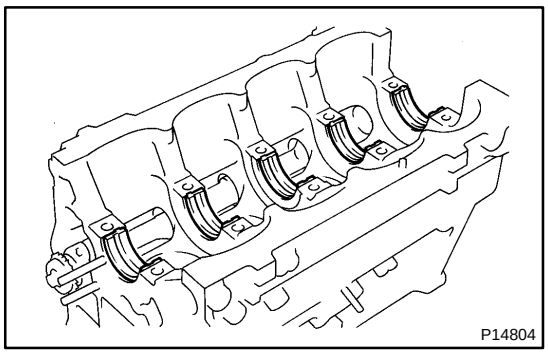

7. INSTALL MAIN BEARINGS

(a) Align the bearing claw with the claw groove of the cylinder block, and push in the 5 upper bearings.

(b) Align the bearing claw with the claw groove of the main bearing cap, and push in the 5 lower bearings.

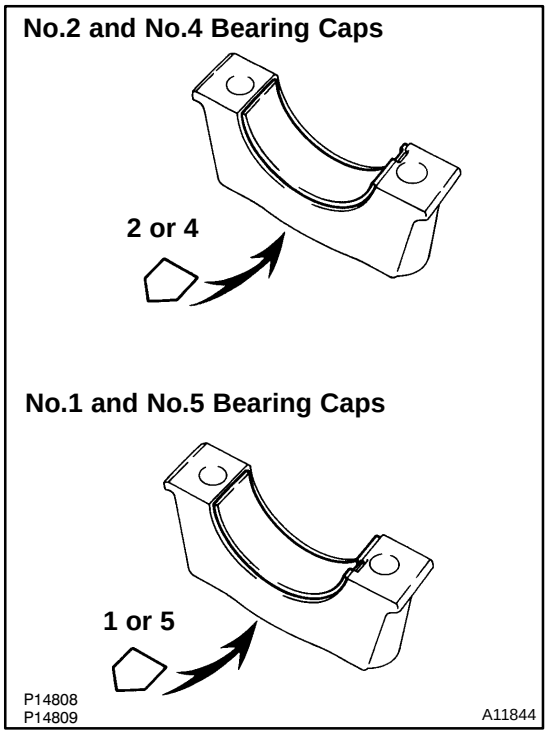

HINT:

A number is marked on each main bearing cap to indicate the installation position.

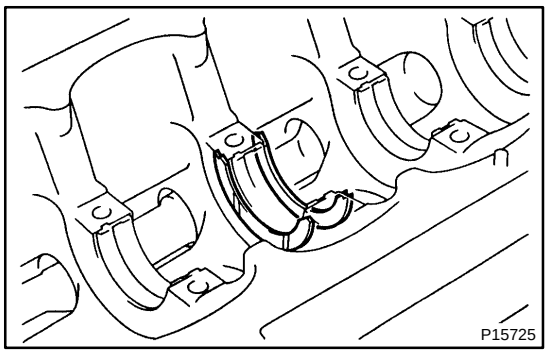

8. INSTALL UPPER THRUST WASHERS

Install the 2 thrust washers under the No.3 journal position of the cylinder block with the oil grooves facing outward.

9. PLACE CRANKSHAFT ON CYLINDER BLOCK

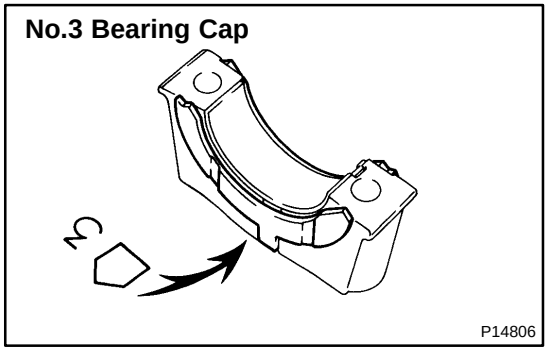

10. PLACE MAIN BEARING CAPS AND LOWER THRUST WASHRES ON CYLINDER BLOCK

(a) Install the 2 thrust washers on the No.3 bearing cap with the grooves facing outward.

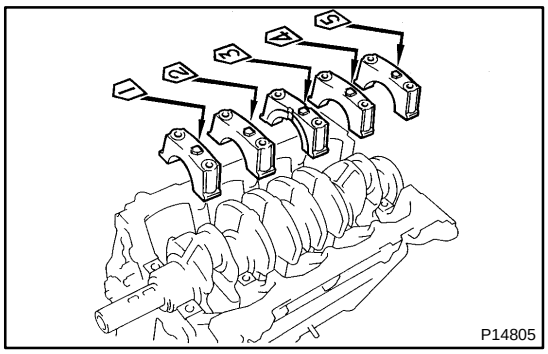

(b) Install the 5 main bearing caps in their proper locations.

HINT:

Each bearing cap has a number and front mark.

11. INSTALL MAIN BEARING CAP BOLTS

HINT:

- The main bearing cap bolts are tightened in 2 progressive steps (steps (b) and (d)).
- If any of the main bearing cap bolts is broken or deformed, replace it.

(a) Apply a light coat of engine oil on the threads and under the heads of the main bearing cap bolts.

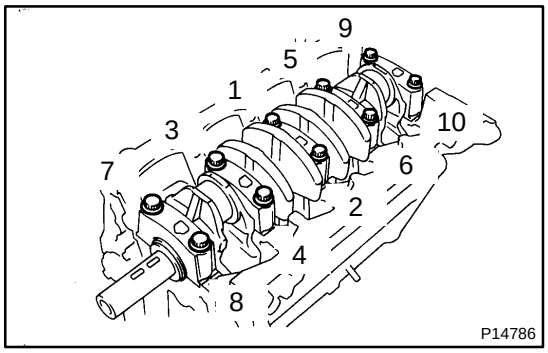

(b) Install and uniformly tighten the 10 bolts of the main bearing caps in several passes, in the sequence shown.

Torque: 39 N·m (400 kgf·cm, 29 ft·lbf)

If any one of the main bearing cap bolts does not meet the torque specification, replace the main bearing cap bolt.

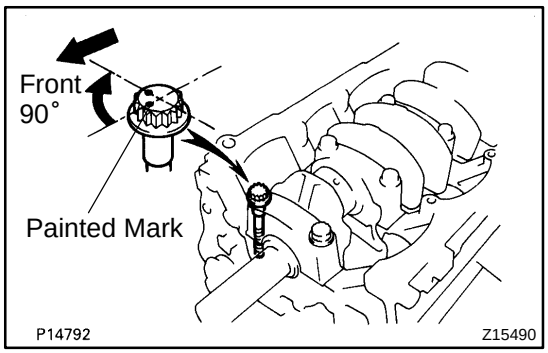

(c) Mark the front of the main bearing cap bolt with paint.

(d) Retighten the main bearing cap bolts by 90° in the numerical order shown above.

(e) Check that the painted mark is now at a 90° angle to the front.

(f) Check that the crankshaft turns smoothly.

(g) Check the crankshaft thrust clearance (See page EM–84).

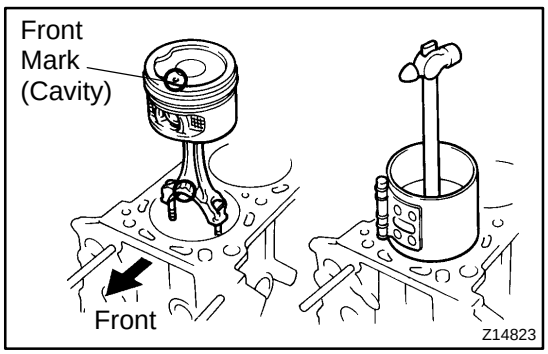

12. INSTALL PISTON AND CONNECTING ROD ASSEMBLIES

(a) Cover the connecting rod bolts with a short piece of hose to protect the crankshaft from damage.

(b) Using a piston ring compressor, push the correctly numbered piston and connecting rod assemblies into each cylinder with the front mark of the piston facing forward.

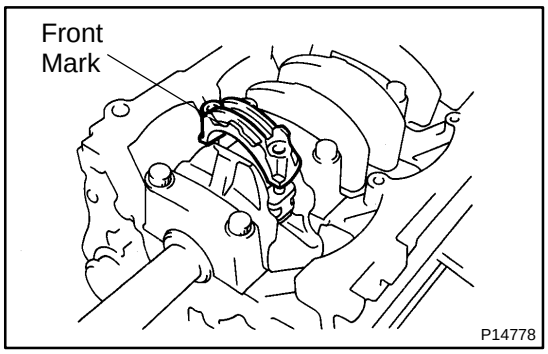

13. PLACE CONNECTING ROD CAP ON CONNECTING ROD

(a) Match the numbered connecting rod cap with the connecting rod.

(b) Install the connecting rod cap with the front mark facing forward.

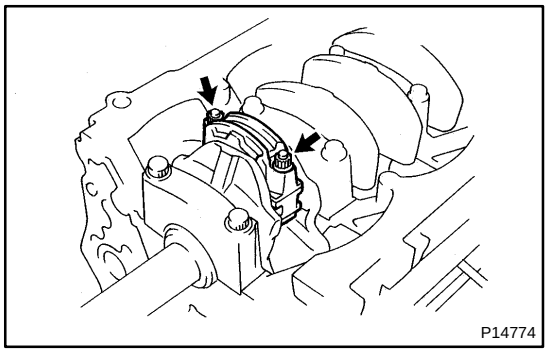

14. INSTALL CONNECTING ROD CAP NUTS

HINT:

- The connecting rod cap nuts are tightened in 2 progressive steps (steps (b) and (d)).
- If any connecting rod bolt is broken or deformed, replace it.

(a) Apply a light coat of engine oil on the threads and under the nuts of the connecting rod cap.

(b) Install and alternately tighten the nuts of the connecting rod cap in several passes.

Torque: 45 N·m (460 kgf·cm, 33 ft·lbf)

If any one of the connecting rod cap nuts does not meet the torque specification, replace the connecting rod bolt and cap nut as a set.

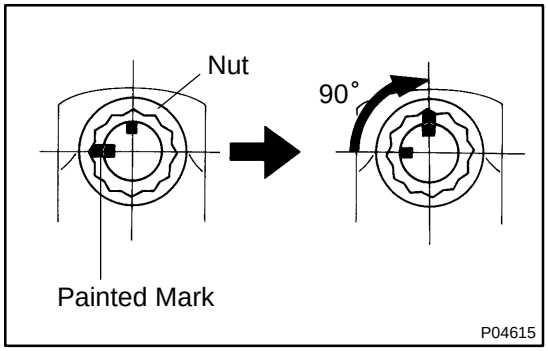

(c) Mark the front of the connecting rod cap nut and bolt with paint.

(d) Retighten the connecting rod cap nuts 90° as shown.

(e) Check that the painted mark on the nut is at a 90° angle in relation to the mark on the bolt.

(f) Check that the crankshaft turns smoothly.

(g) Check the connecting rod thrust clearance (See page EM–84).

15. INSTALL REAR OIL SEAL RETAINER

(a) Remove any old packing (FIPG) material and be careful not to drop any oil on the contact surfaces of the retainer and cylinder block.

- Using a razor blade and gasket scraper, remove all the old packing (FIPG) material from the gasket surfaces and sealing groove.
- Thoroughly clean all components to remove all the loose material.
- Using a non–residue solvent, clean both sealing surfaces.

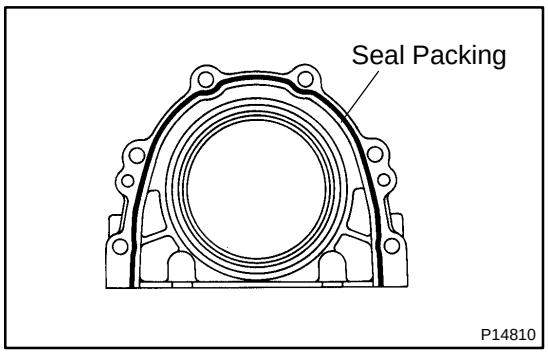

(b) Apply seal packing to the retainer as shown in the illustration.
Seal packing: Part No. 08826–00080 or equivalent
- Install a nozzle that has been cut to a 2 – 3 mm (0.08 – 0.12 in.) opening.

HINT:
Avoid applying an excessive amount to the surface.
- Parts must be assembled within 5 minutes of application. Otherwise the material must be removed and reapplied.
- Immediately remove nozzle from the tube and reinstall cap.

(c) Install the retainer with the 6 bolts.
Torque: 13.5 N·m (135 kgf·cm, 9.7 ft·lbf)

16. INSTALL CRANKSHAFT POSITION SENSOR CONNECTOR BRACKET

17. INSTALL ENGINE WIRE BRACKET

18. INSTALL RH AND LH ENGINE MOUNTING ASSEMBLIES
Torque: 52 N·m (520 kgf·cm, 38 ft·lbf)

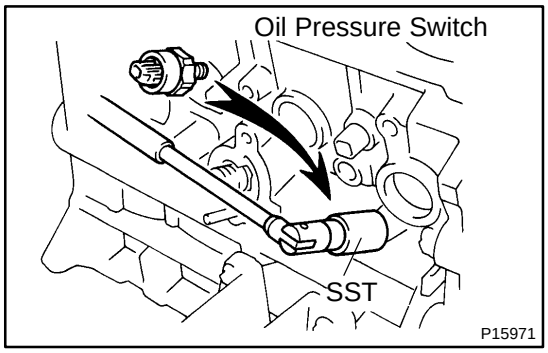

19. INSTALL OIL PRESSURE SWITCH

(a) Apply adhesive to 2 or 3 threads of the oil pressure switch.
Adhesive:
Part No. 08833–00080, THREE BOND 1344, LOCTITE 242 or equivalent

(b) Using SST, install the oil pressure switch.
SST 09816–30010

20. INSTALL ENGINE COOLANT DRAIN COCK
Torque: 24.5 N·m (250 kgf·cm, 18 ft·lbf)

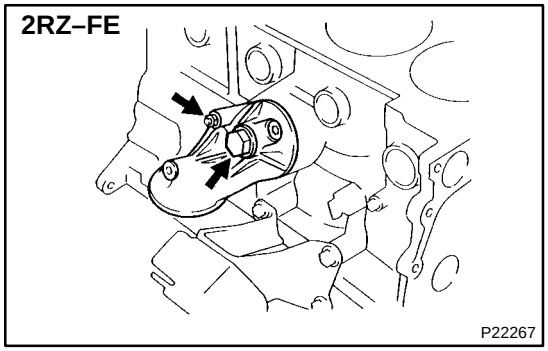

21. 2RZ–FE:
INSTALL OIL FILTER BRACKET

(a) Install a new O–ring to the union bolt.
(b) Install a new gasket.
(c) Install the oil filter bracket with the union bolt and a nut.
Torque:
68.5 N·m (700 kgf·cm, 51 ft·lbf) for union bolt
12 N·m (120 kgf·cm, 9 ft·lbf) for nut

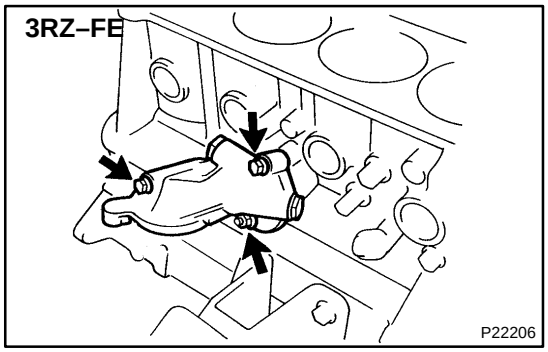

22. 3RZ–FE:
INSTALL OIL FILTER BRACKET

(a) Install a new O–ring to the union.
(b) Using a 14 mm hexagon wrench, install the union.
Torque: 24.5 N·m (250 kgf·cm, 18 ft·lbf)
(c) Install a new O–ring and the oil filter bracket with the 2 bolts and nut.
Torque: 28 N·m (290 kgf·cm, 21 ft·lbf)

23. INSTALL OIL FILTER (See page LU–2)

24. INSTALL WATER BYPASS PIPE
Torque: 20 N·m (200 kgf·cm, 14 ft·lbf)

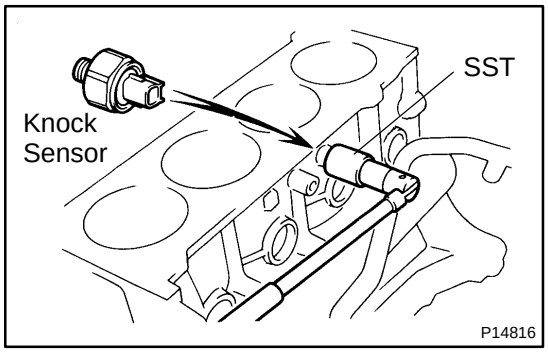

25. INSTALL KNOCK SENSOR
Using SST, install the knock sensor.
SST 09816–30010
Torque: 37 N·m (380 kgf·cm, 27 ft·lbf)

26. INSTALL FUEL FILTER
Torque: 20 N·m (200 kgf·cm, 14 ft·lbf)

27. INSTALL TIMING CHAINS, GEAR AND SPROCKETS (See page EM–25)

28. INSTALL CYLINDER HEAD (See page EM–57)

29. REMOVE ENGINE STAND

30. INSTALL REAR END PLATE
Install the rear end plate with the 3 bolts.
Torque:
18 N·m (185 kgf·cm, 13 ft·lbf) for bolt A
20 N·m (200 kgf·cm, 14 ft·lbf) for bolt B

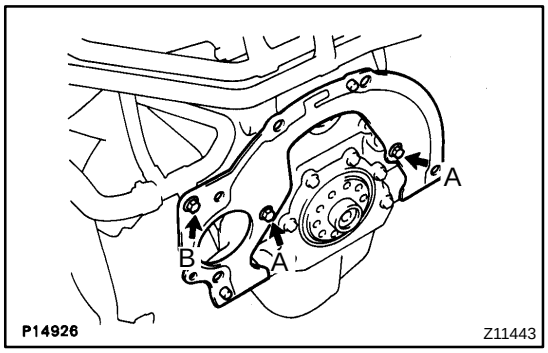

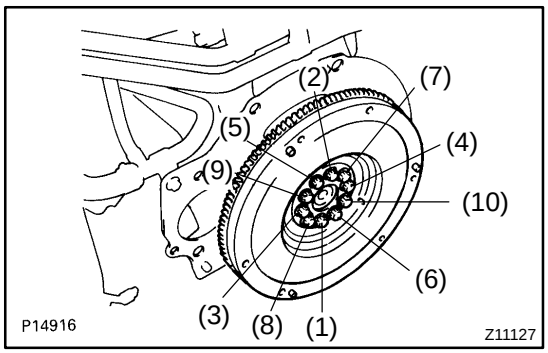

31. M/T for 2RZ–FE:
INSTALL FLYWHEEL
Install and uniformly tighten 10 new bolts to the flywheel in several passes, in the sequence shown.
Torque: 88 N·m (900 kgf·cm, 65 ft·lbf)

32. M/T for 3RZ–FE:
INSTALL FLYWHEEL
(a) Install and uniformly tighten 10 new bolts to the flywheel in several passes, in the sequence shown.
Torque: 26.5 N·m (270 kgf·cm, 19 ft·lbf)
(b) Mark the top of the flywheel bolt with paint.
(c) Retighten the flywheel bolts by 90° in the numerical order shown above.
(d) Check that the painted mark is now at a 90° angle to the top.

33. A/T:
INSTALL DRIVE PLATE
(a) Apply adhesive to 2 or 3 threads of the bolt end.

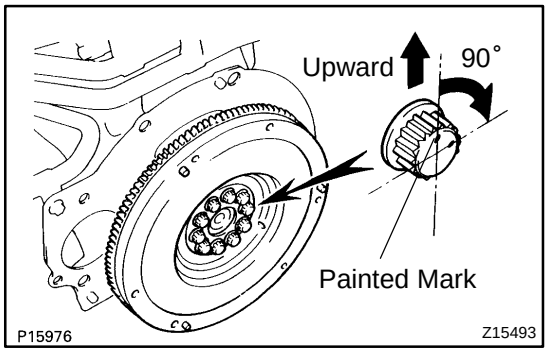

Adhesive:
Part No. 08833–00070, THREE BOND 1324 or equivalent

(b) Install the front spacer, drive plate and rear plate with the 10 bolts.
Torque: 74 N·m (750 kgf·cm, 54 ft·lbf)

EM170–01

REPLACEMENT

1. REPLACE CONNECTING ROD BUSHINGS

(a) Using SST and a press, press out the bushing.
SST 09207–76010

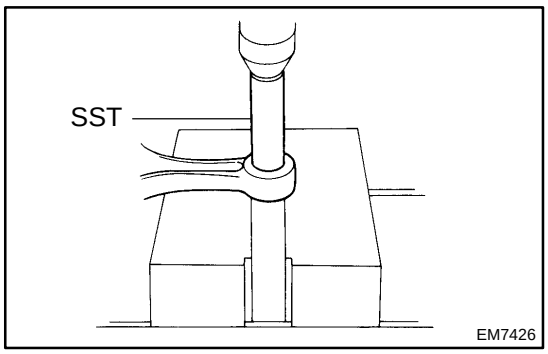

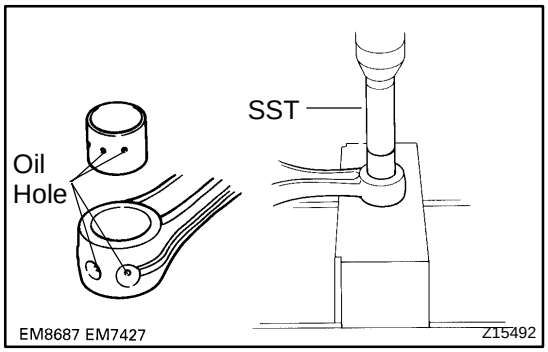

(b) Align the oil holes of a new bushing and the connecting rod.

(c) Using SST and a press, press in the bushing.
SST 09207–76010

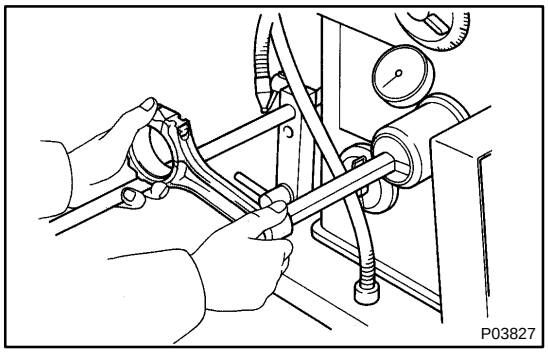

(d) Using a pin hole grinder, hone the bushing to obtain the standard specified clearance (see step 14 above) between the bushing and piston pin.

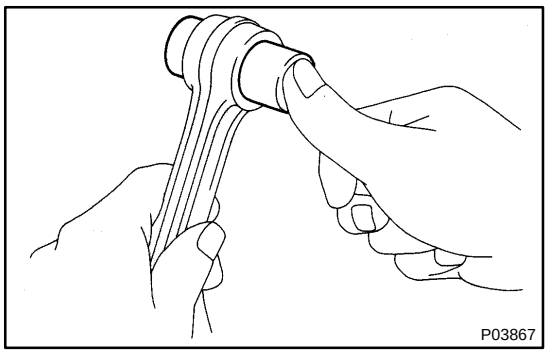

(e) Check the piston pin fit at normal room temperature. Coat the piston pin with engine oil, and push it into the connecting rod with your thumb.

2. REPLACE OVERSIZED (O/S) PISTONS

HINT:

- Bore all the 4 cylinders for the O/S piston outside diameter.
- Replace all the piston rings with ones to match the O/S pistons.

(a) Select the O/S pistons.
O/S piston diameter:

2RZ–FE	95.423 – 95.433 mm (3.7568 – 3.7572 in.)
3RZ–FE	95.433 – 95.443 mm (3.7572 – 3.7576 in.)

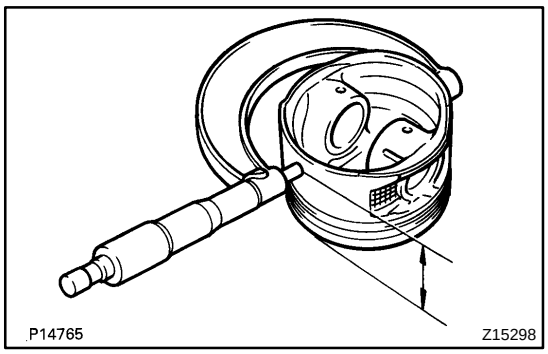

(b) Using a micrometer, measure the piston diameter at right angles to the piston pin center line, 35.5 mm (1.40 in.) for 2RZ–FE or 37.5 mm (1.47 in.) for 3RZ–FE from the piston head.

(c) Calculate the amount of each cylinder is to be rebored as follows:

Size to be rebored = P + C – H

P = Piston diameter

C = Piston clearance:

2RZ–FE	0.057 – 0.080 mm (0.0022 – 0.0031 in.)
3RZ–FE	0.047 – 0.070 mm (0.0019 – 0.0028 in.)

H = Allowance for honing:

0.020 mm (0.0008 in.) or less

(d) Bore and hone the cylinder to calculated dimensions.

Maximum honing: 0.02 mm (0.0008 in.)

NOTICE:

Excess honing will destroy the finished roundness.

3. REPLACE CRANKSHAFT FRONT OIL SEAL (See page LU–12)

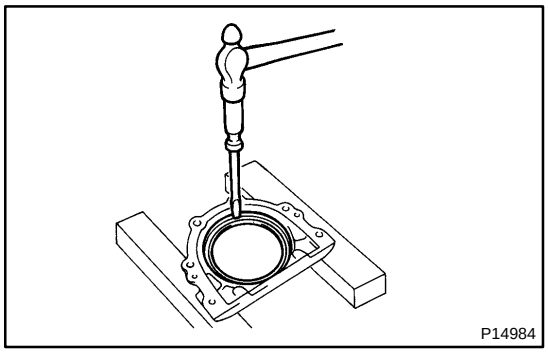

4. REPLACE CRANKSHAFT REAR OIL SEAL

HINT:

There are 2 methods ((a) and (b)) to replace the oil seal.

(a) If rear oil seal retainer is removed from cylinder block:

(1) Using a screwdriver and a hammer, tap out the oil seal.

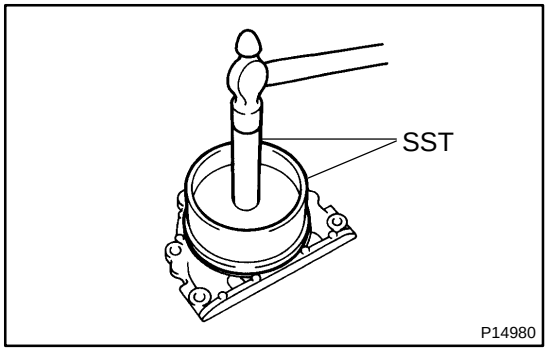

(2) Using SST and a hammer, tap in a new oil seal until its surface is flush with the oil seal retainer edge.

SST 09223–15030, 09950–70010 (09951–07150)

(3) Apply MP grease to the oil seal lip.

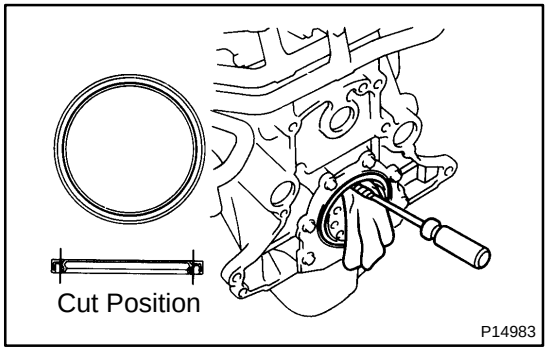

(b) If rear oil seal retainer is installed to cylinder block:

(1) Using a knife, cut off the oil seal lip.

(2) Using a screwdriver, pry out the oil seal.

NOTICE:

Be careful not to damage the crankshaft. Tape the screwdriver tip.

(3) Apply MP grease to a new oil seal lip.

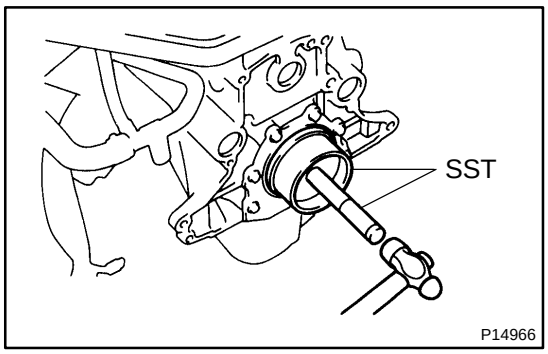

(4) Using SST and a hammer, tap in the oil seal until its surface is flush with the rear oil seal retainer edge.

SST 09223–15030, 09950–70010 (09951–07150)

CYLINDER HEAD

COMPONENTS

EM1MX–02

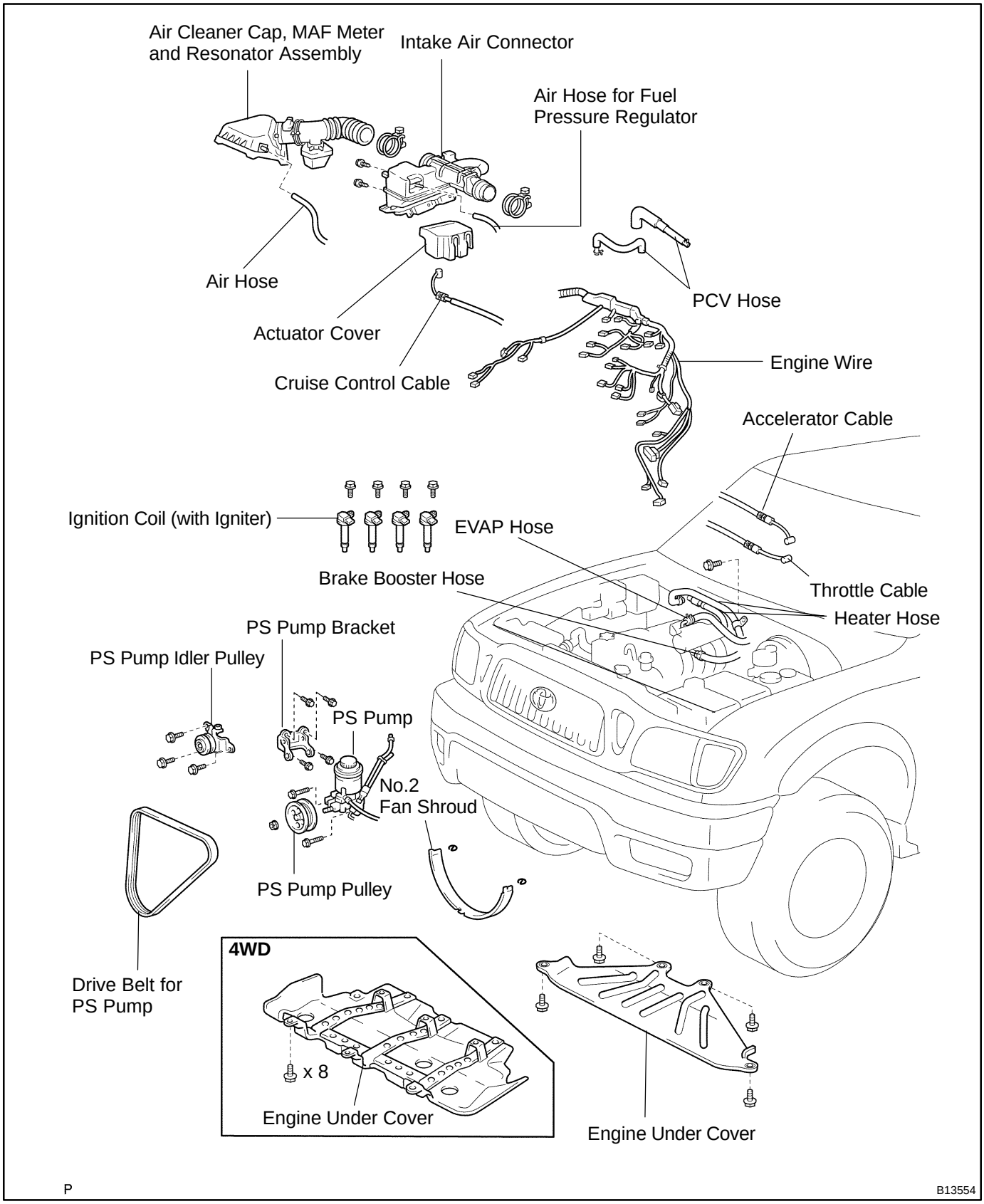

for 2RZ–FE

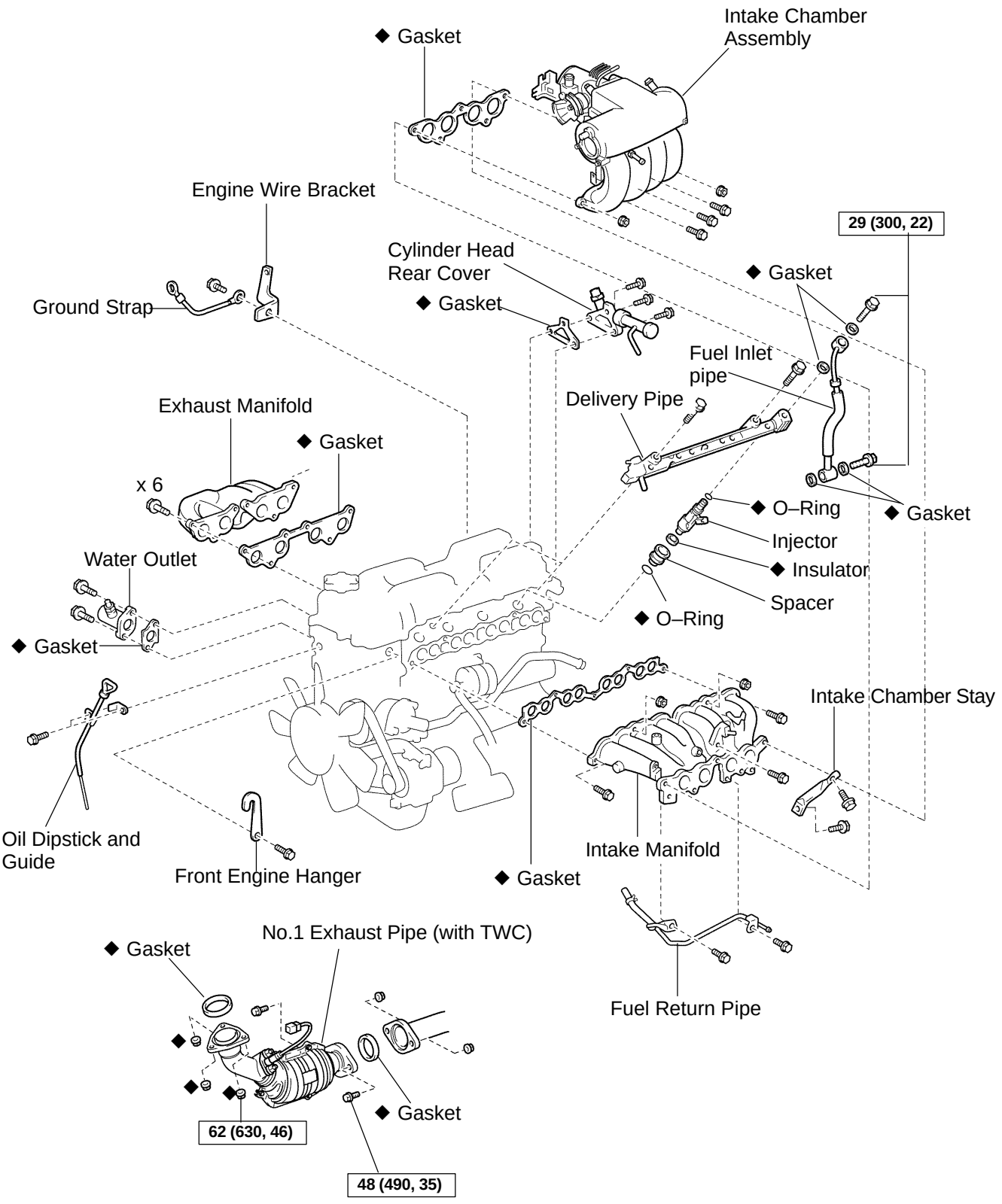

N·m (kgf·cm, ft·lbf) : Specified torque

◆ Non–reusable part

P

A17818

for 3RZ–FE

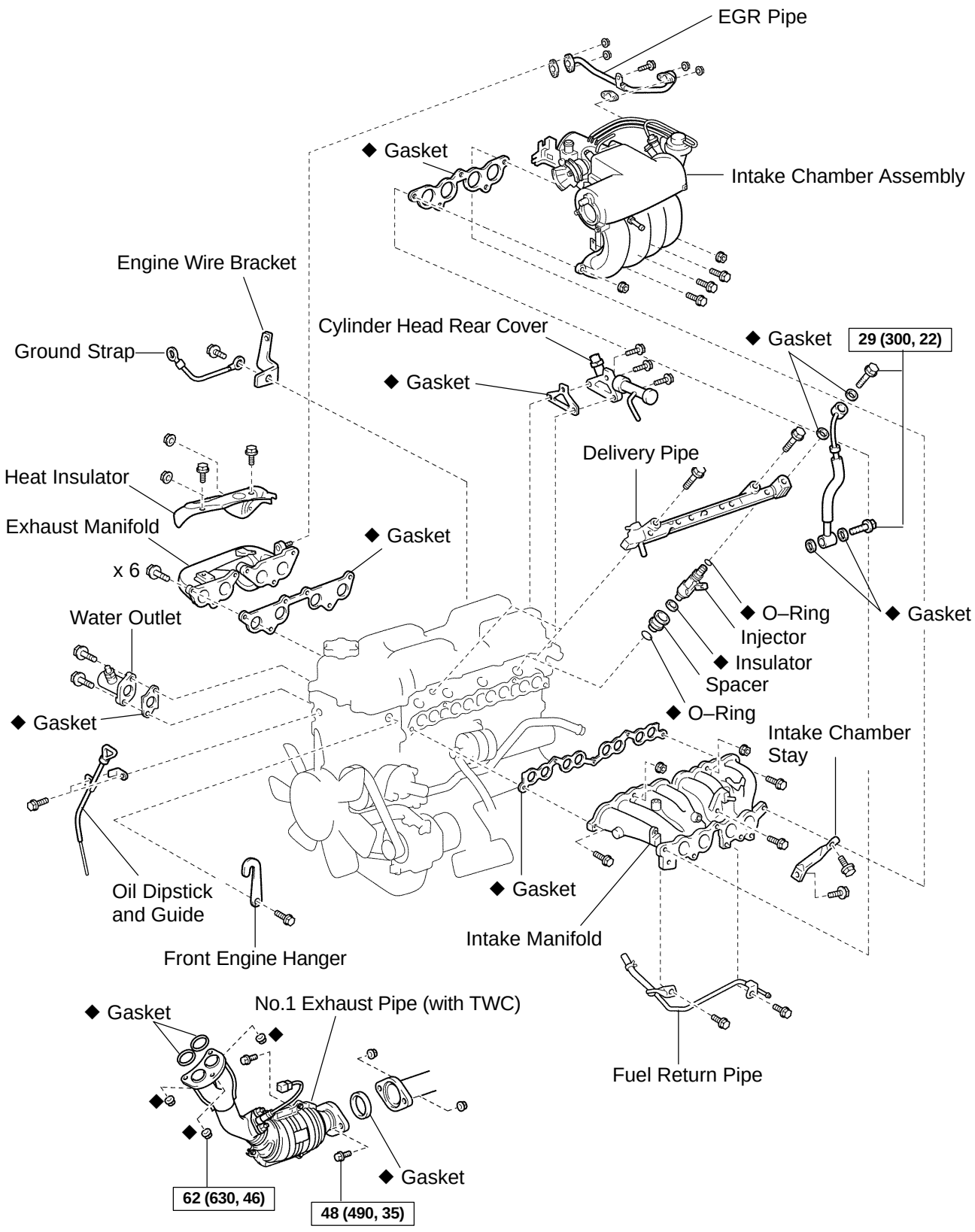

N·m (kgf·cm, ft·lbf) : Specified torque
◆ Non–reusable part

P A17819

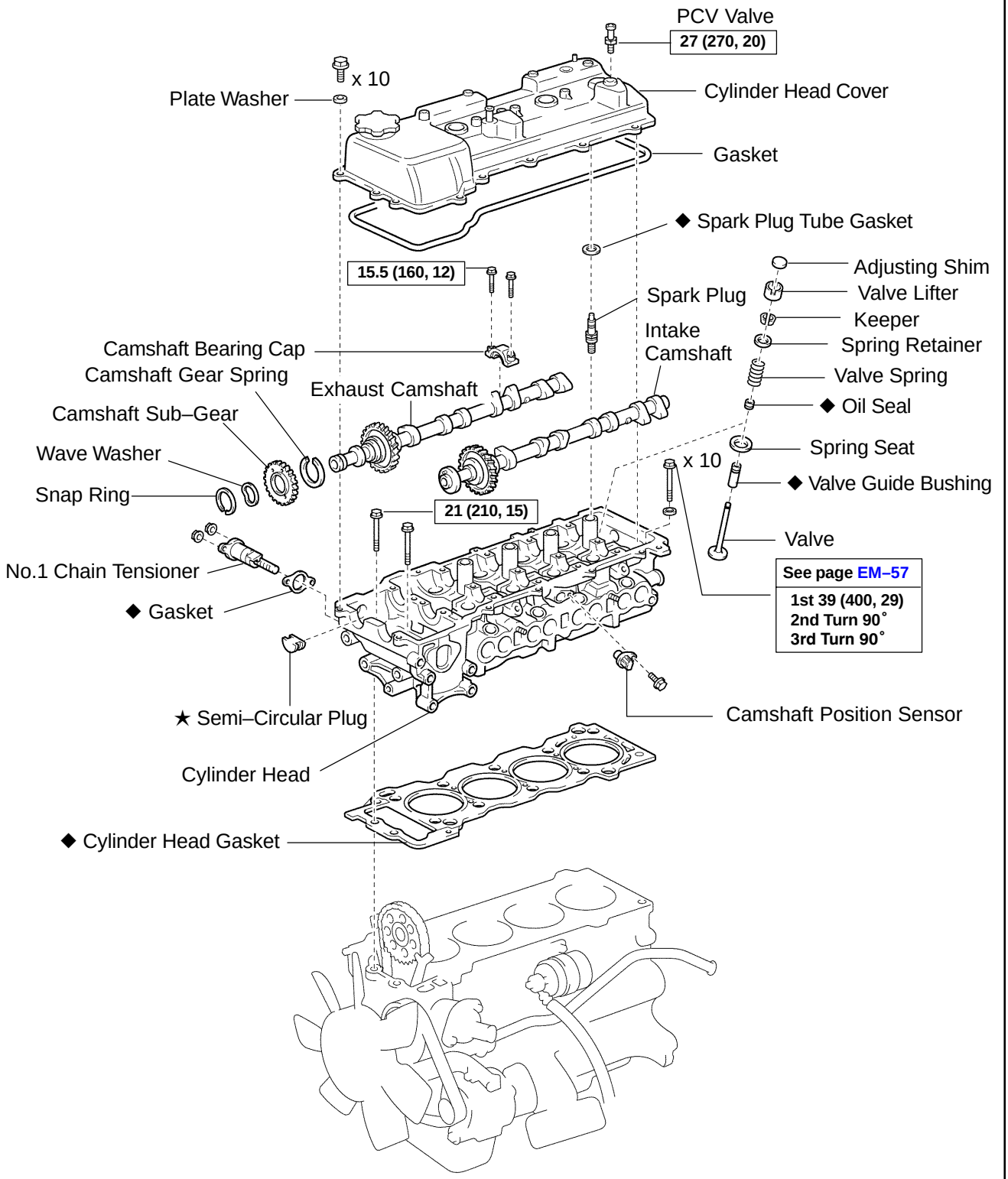

N·m (kgf·cm, ft·lbf) : Specified torque
◆ Non–reusable part
P ★ Precoated part

B13568

EM02T–02

DISASSEMBLY

1. REMOVE VALVE LIFTERS AND SHIMS

HINT:

Arrange the valve lifters and shims in correct order.

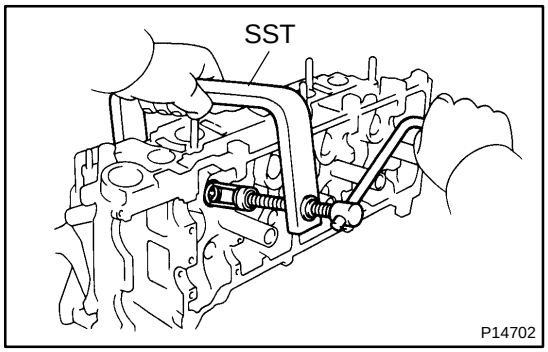

2. REMOVE VALVES

(a) Using SST, compress the valve spring and remove the 2 keepers.

SST 09202–70020 (09202–00010)

(b) Remove the spring retainer, valve spring and valve.

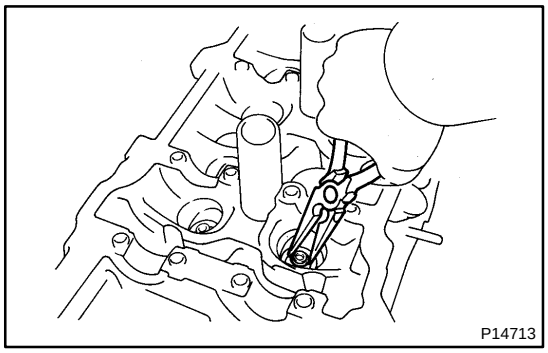

(c) Using needle–nose pliers, remove the oil seal.

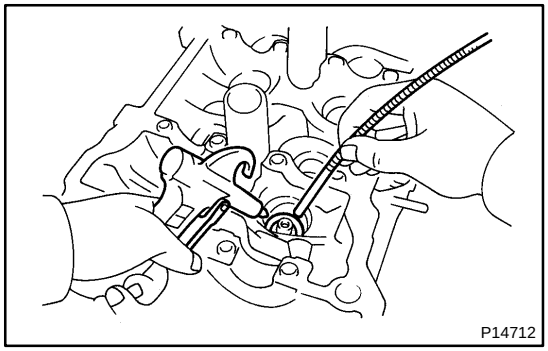

(d) Using compressed air and a magnetic finger, remove the spring seat by blowing air.

HINT:

Arrange the valves, valve springs, spring seats and spring retainers in correct order.

EM16R–02

INSPECTION

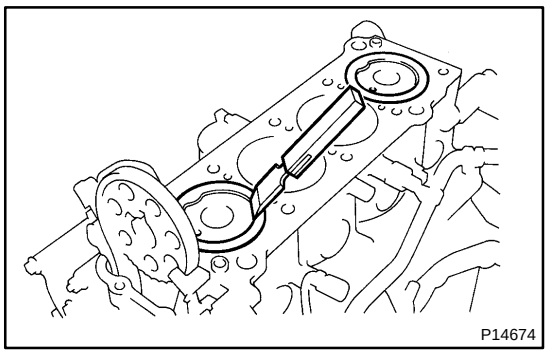

1. CLEAN TOP SURFACES OF PISTONS AND CYLINDER BLOCK

(a) Turn the crankshaft, and bring each piston to top dead center (TDC).

(b) Using a gasket scraper, remove all the carbon from the piston top surface.

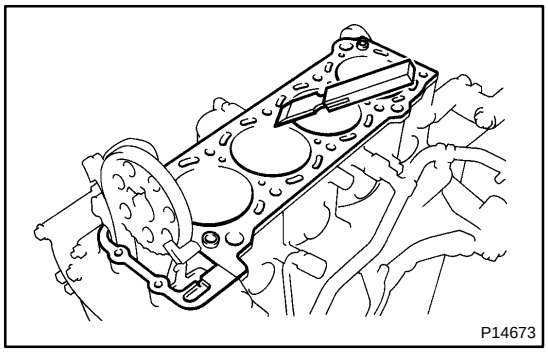

(c) Using a gasket scraper, remove all the gasket material from the cylinder block surface.

(d) Using compressed air, blow carbon and oil from the bolt holes.

CAUTION:
Protect your eyes when using high–compressed air.

2. INSPECT SURFACES OF CYLINDER BLOCK FOR FLATNESS (See page EM–91)

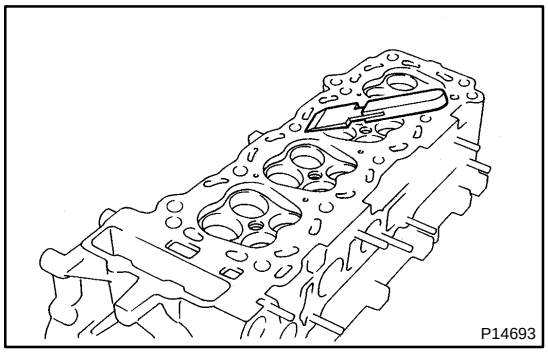

3. CLEAN CYLIDER HEAD

(a) Using a gasket scraper, remove all the gasket material from the cylinder block contact surface.

NOTICE:
Be careful not to scratch the cylinder block contact surface.

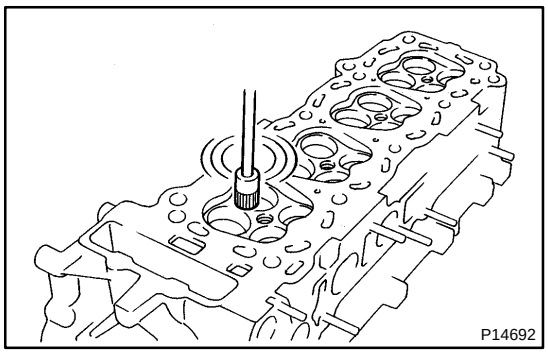

(b) Using a wire brush, remove all the carbon from the combustion chambers.

NOTICE:
Be careful not to scratch the cylinder block contact surface.

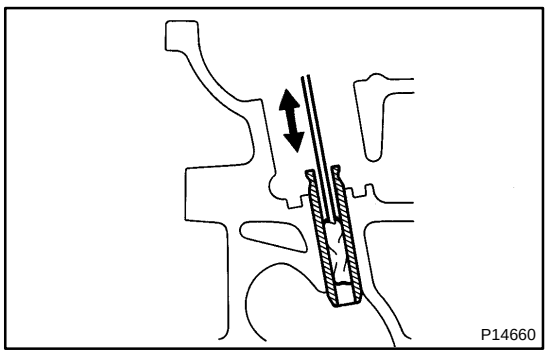

(c) Using a valve guide bushing brush and solvent, clean all the guide bushings.

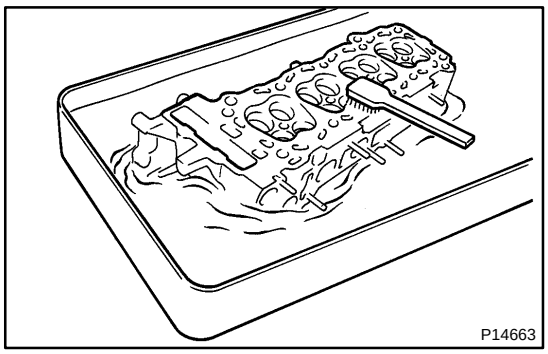

(d) Using a soft brush and solvent, thoroughly clean the cylinder head.

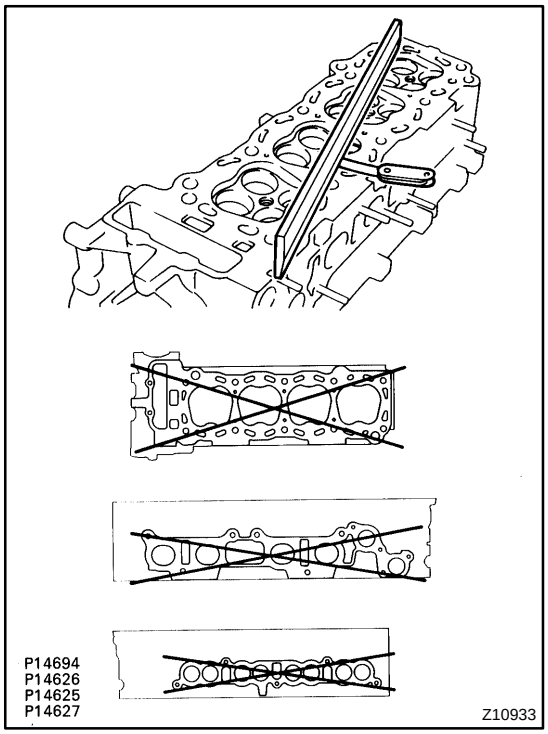

4. INSPECT CYLINDER HEAD

(a) Inspect for flatness.

Using a precision straight edge and thickness gauge, measure the surfaces contacting the cylinder block and the manifolds for warpage.

Maximum warpage:

Cylinder block side	0.05 mm (0.0020 in.)
Manifold side	0.10 mm (0.0039 in.)

If warpage is greater than maximum, replace the cylinder head.

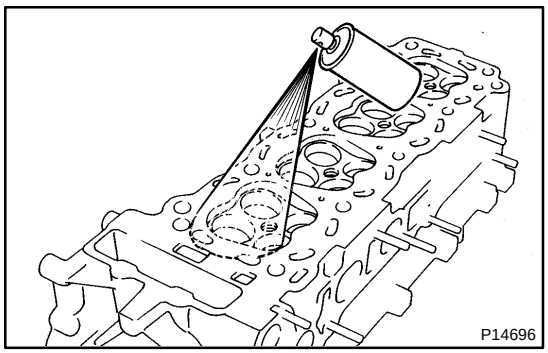

(b) Inspect for cracks.

Using a dye penetrant, check the combustion chambers, intake ports, exhaust ports and cylinder block surface for cracks.

If cracked, replace the cylinder head.

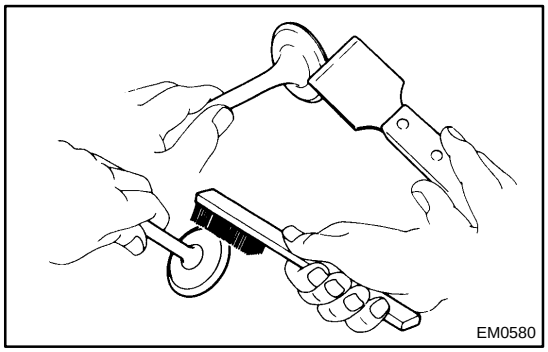

5. CLEAN VALVES

(a) Using a gasket scraper, chip off any carbon from the valve head.

(b) Using a wire brush, thoroughly clean the valve.

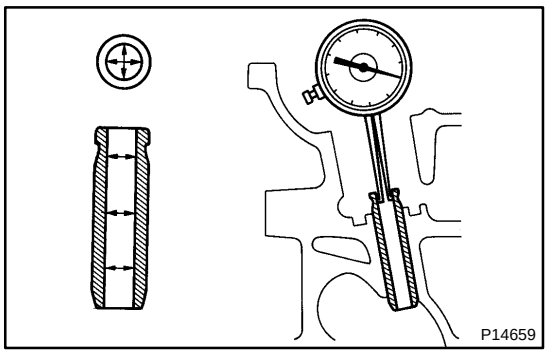

6. INSPECT VALVE STEMS AND GUIDE BUSHINGS

(a) Using a caliper gauge, measure the inside diameter of the guide bushing.

Bushing inside diameter:
6.010 – 6.030 mm (0.2366 – 0.2374 in.)

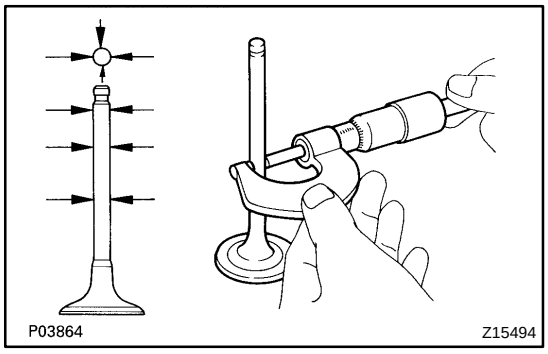

(b) Using a micrometer, measure the diameter of the valve stem.

Valve stem diameter:

Intake	5.970 – 5.985 mm (0.2350 – 0.2356 in.)
Exhaust	5.965 – 5.980 mm (0.2348 – 0.2354 in.)

(c) Subtract the valve stem diameter measurement from the guide bushing inside diameter measurement.

Standard oil clearance:

Intake	0.025 – 0.060 mm (0.0010 – 0.0024 in.)
Exhaust	0.030 – 0.065 mm (0.0012 – 0.0026 in.)

Maximum oil clearance:

Intake	0.08 mm (0.0031 in.)
Exhaust	0.10 mm (0.0039 in.)

If the clearance is greater than maximum, replace the valve and guide bushing (See page EM–53).

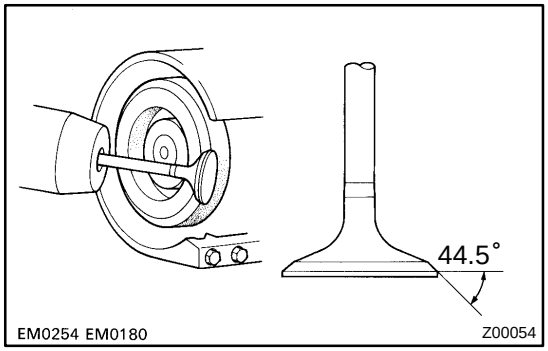

7. INSPECT AND GRIND VALVES

(a) Grind the valve enough to remove pits and carbon.

(b) Check that the valve is ground to the correct valve face angle.

Valve face angle: 44.5°

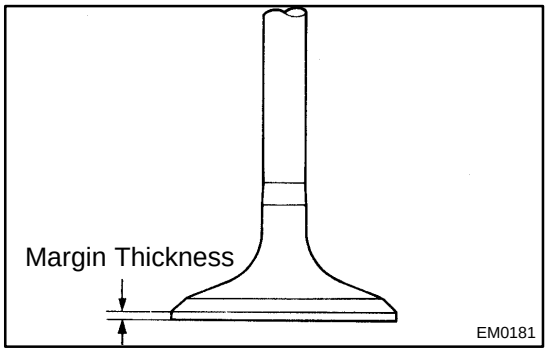

(c) Check the valve head margin thickness.

Standard margin thickness: 1.0 mm (0.039 in.)
Minimum margin thickness: 0.5 mm (0.020 in.)

If the margin thickness is less than minimum, replace the valve.

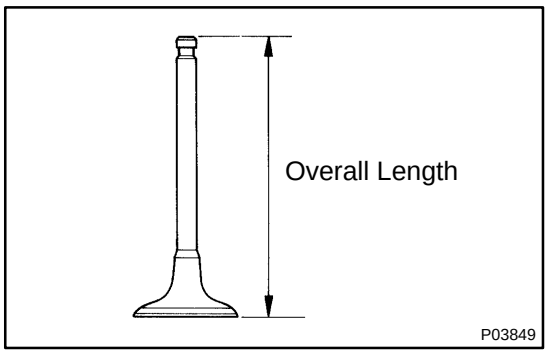

(d) Check the valve overall length.

Standard overall length:

Intake	103.45 mm (4.0728 in.)
Exhaust	103.60 mm (4.0787 in.)

Minimum overall length:

Intake	102.95 mm (4.0531 in.)
Exhaust	103.10 mm (4.0590 in.)

If the overall length is less than minimum, replace the valve.

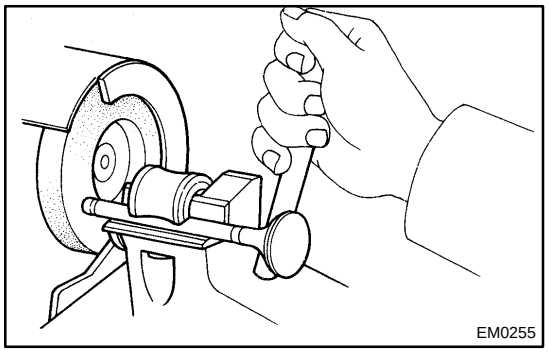

(e) Check the surface of the valve stem tip for wear.

If the valve stem tip is worn, resurface the tip with a grinder or replace the valve.

NOTICE:

Do not grind off more than minimum.

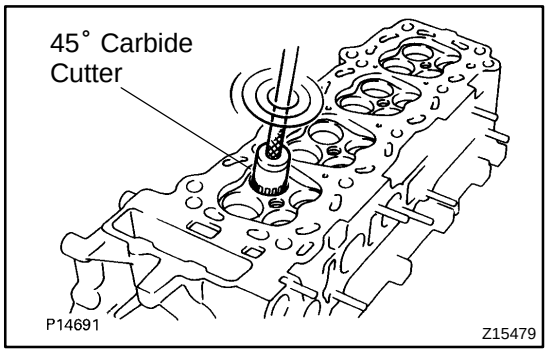

8. INSPECT AND CLEAN VALVE SEATS

(a) Using a 45˚ carbide cutter, resurface the valve seats. Remove only enough metal to clean the seats.

(b) Check the valve seating position.

Apply a light coat of prussian blue (or white lead) to the valve face. Lightly press the valve against the seat. Do not rotate valve.

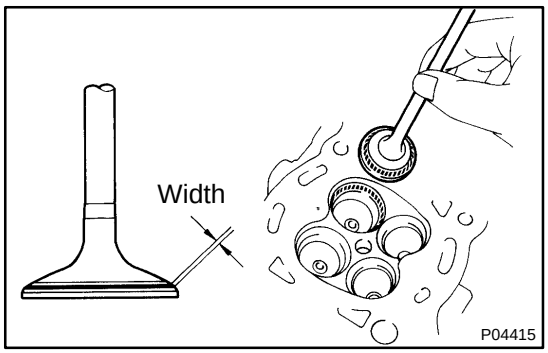

(c) Check the valve face and seat for these:

- If blue appears 360˚ around the face, the valve is concentric. If not, replace the valve.
- If blue appears 360˚ around the valve seat, the guide and face are concentric. If not, resurface the seat.
- Check that the seat contact is in the middle of the valve face with these width:

1.0 – 1.4 mm (0.039 – 0.055 in.)

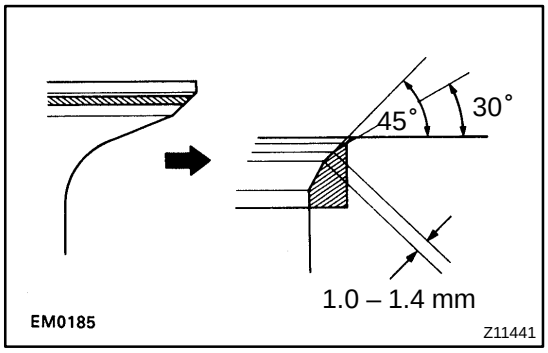

If not, correct the valve seats as follows:

(1) Intake valve seat:

If the seating is too high on the valve face, use 30˚ and 45˚ cutters to correct the seat.

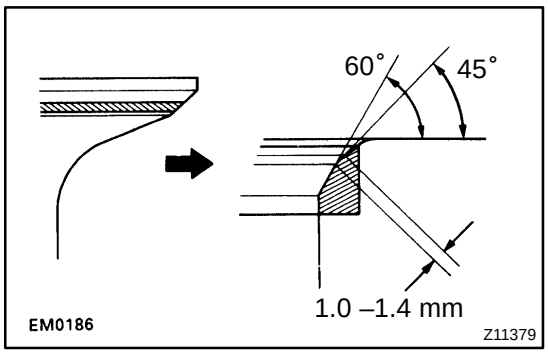

(2) Exhaust valve seat:
If the seating is too low on the valve face, use 60° and 45° cutters to correct the seat.

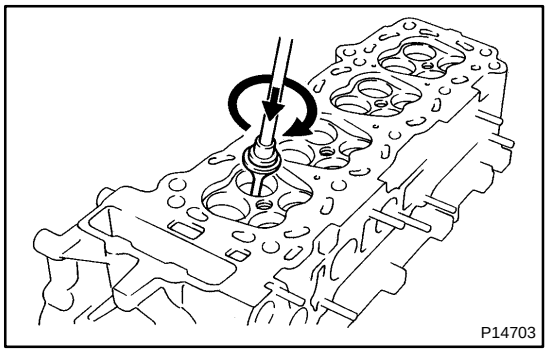

(d) Hand–lap the valve and valve seat with an abrasive compound.
(e) After hand–lapping, clean the valve and valve seat.

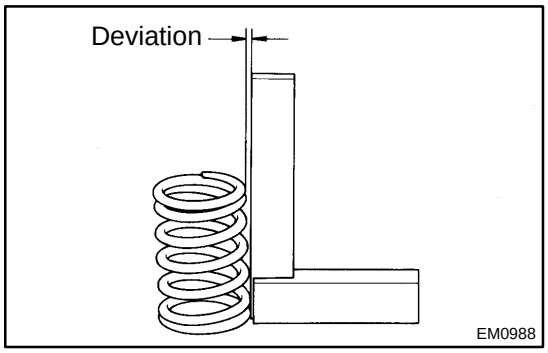

9. INSPECT VALVE SPRINGS

(a) Using a steel square, measure the deviation of the valve spring.
Maximum deviation: 2.0 mm (0.079 in.)

If the deviation is greater than maximum, replace the valve spring.

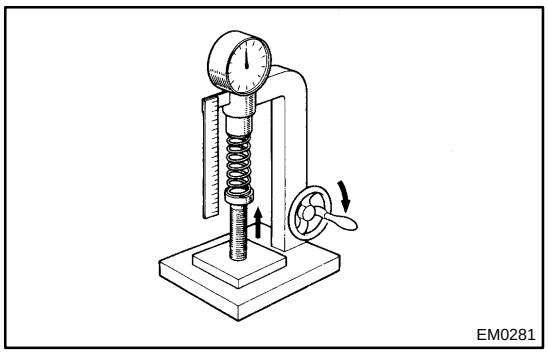

(b) Using a spring tester, measure the tension of the valve spring at the specified installed length.
Installed tension:
177 – 204 N (18.0 – 20.8 kgf, 39.7 – 45.9 lbf) at 35.7 mm (1.406 in.)

If the installed tension is not as specified, replace the valve spring.

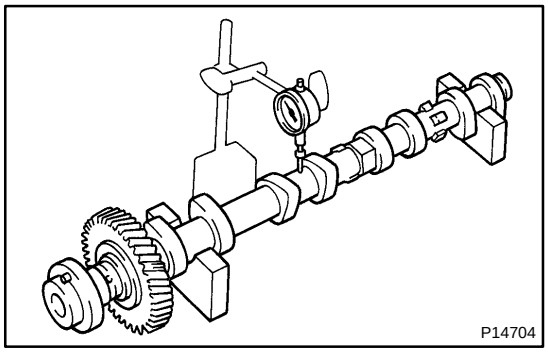

10. INSPECT CAMSHAFT

(a) Inspect the runout.
(1) Place the camshaft on V–blocks.
(2) Using a dial indicator, measure the circle runout at the center journal.
Maximum circle runout: 0.06 mm (0.0024 in.)

If the circle runout is greater than maximum, replace the camshaft.

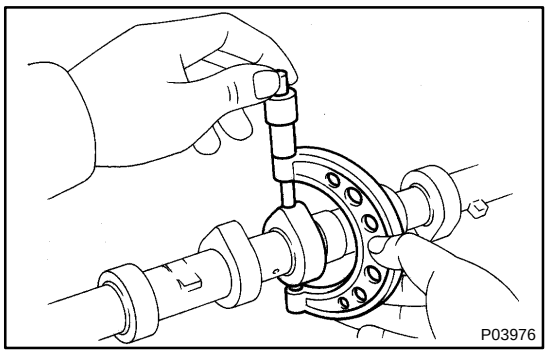

(b) Using a micrometer, measure the cam lobe height.

Standard cam lobe height:

Intake	45.31 – 45.41 mm (1.7839 – 1.7878 in.)
Exhaust	45.06 – 45.16 mm (1.7740 – 1.7779 in.)

If the cam lobe height is less than standard allowable, replace the camshaft.

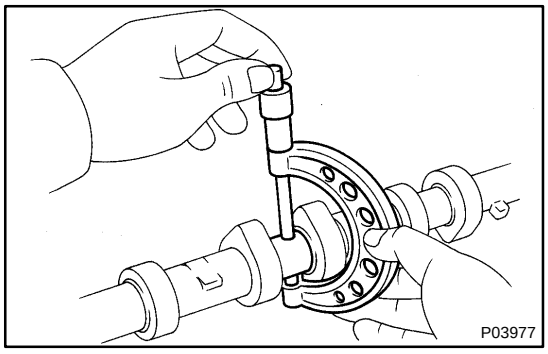

(c) Using a micrometer, measure the journal diameter.

Journal diameter:

26.959 – 26.975 mm (1.0614 – 1.0620 in.)

If the journal diameter is not as specified, check the oil clearance.

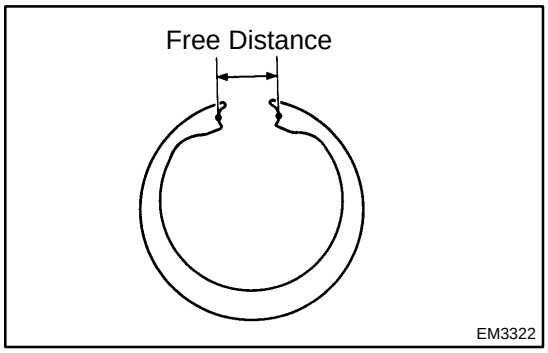

(d) Using a vernier caliper, measure the free distance between the gear spring ends.

Free distance: 22.5 – 22.9 mm (0.886 – 0.902 in.)

If the free distance is not as specified, replace the gear spring.

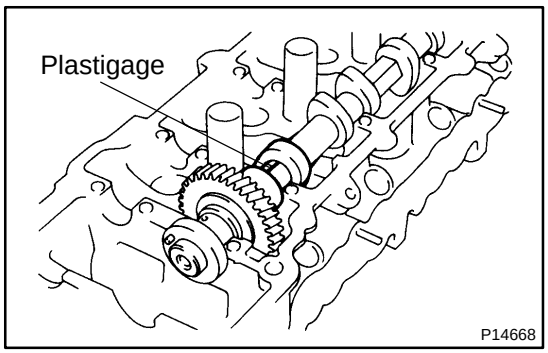

(e) Inspect the camshaft journal oil clearance.

(1) Clean the bearing caps and camshaft journals.

(2) Check the bearings for flaking and scoring.

If the bearings are damaged, replace the bearing caps and cylinder head as a set.

(3) Place the camshafts on the cylinder head.

(4) Lay a strip of Plastigage across each of the journals.

(5) Install the bearing caps (See page EM–55).

Torque: 15.5 N·m (160 kgf·cm, 12 ft·lbf)

NOTICE:

Do not turn the camshaft.

(6) Remove the bearing caps.

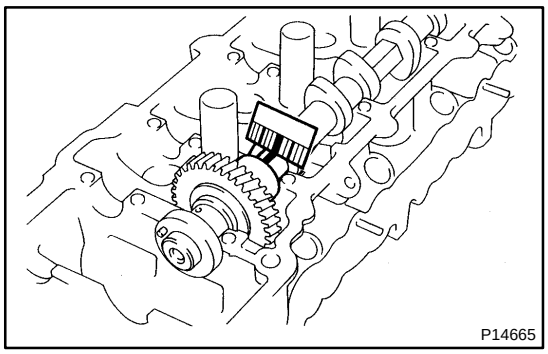
P14665

(7) Measure the Plastigage at its widest point.

Standard oil clearance:
0.025 – 0.062 mm (0.0010 – 0.0024 in.)
Maximum oil clearance: 0.08 mm (0.0031 in.)

If the oil clearance is greater than maximum, replace the camshaft. If necessary, replace the bearing caps and cylinder head as a set.

(8) Completely remove the Plastigage.

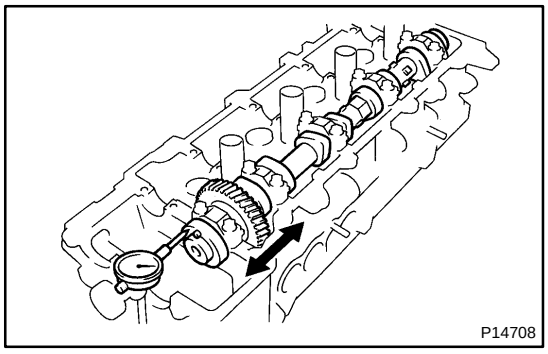
P14708

(f) Inspect the camshaft thrust clearance.

(1) Install the camshaft (See page EM–55).

(2) Using a dial indicator, measure the thrust clearance while moving the camshaft back and forth.

Standard thrust clearance:
0.040 – 0.095 mm (0.0016 – 0.0037 in.)
Maximum thrust clearance: 0.12 mm (0.0047 in.)

If the thrust clearance is greater than maximum, replace the camshaft. If necessary, replace the bearing caps and cylinder head as a set.

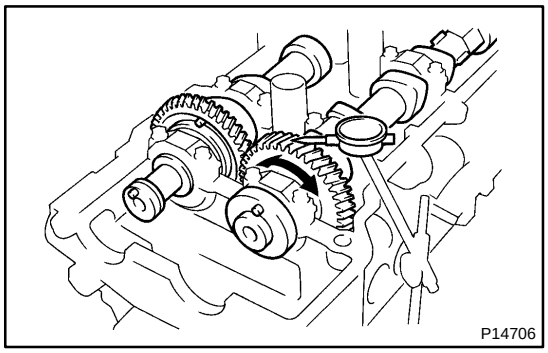
P14706

(g) Inspect the camshaft gear backlash.

(1) Install the camshafts without installing the exhaust cam sub–gear (See page EM–55).

(2) Using a dial indicator, measure the backlash.

Standard backlash:
0.020 – 0.200 mm (0.0008 – 0.0079 in.)
Maximum backlash: 0.30 mm (0.0188 in.)

If the backlash is greater than maximum, replace the camshafts.

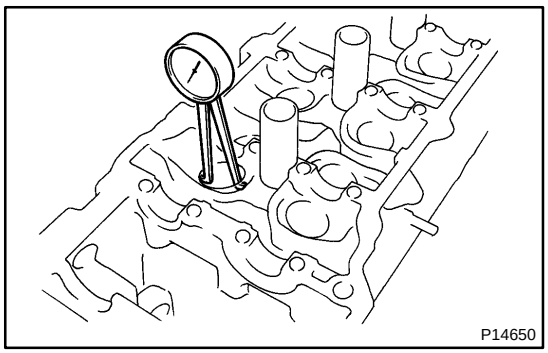
P14650

11. INSPECT VALVE LIFTERS AND LIFTER BORES

(a) Using a caliper gauge, measure the lifter bore diameter of the cylinder head.

Lifter bore diameter:
31.000 – 31.016 mm (1.2205 – 1.2211 in.)

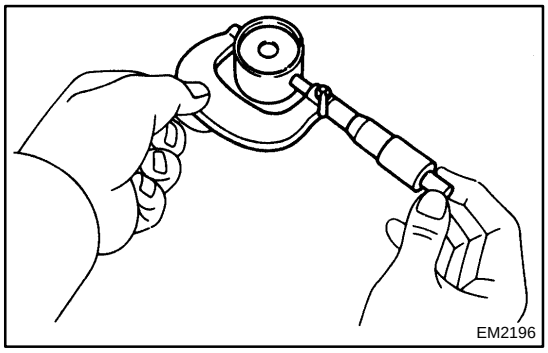
EM2196

(b) Using a micrometer, measure the lifter diameter.

Lifter diameter:
30.966 – 30.976 mm (1.1578 – 1.2195 in.)

(c) Subtract the lifter diameter measurement from the lifter bore diameter measurement.

Standard oil clearance:
0.024 – 0.050 mm (0.0009 – 0.0020 in.)
Maximum oil clearance: 0.07 mm (0.0028 in.)

If the oil clearance is greater than maximum, replace the lifter. If necessary, replace the cylinder head.

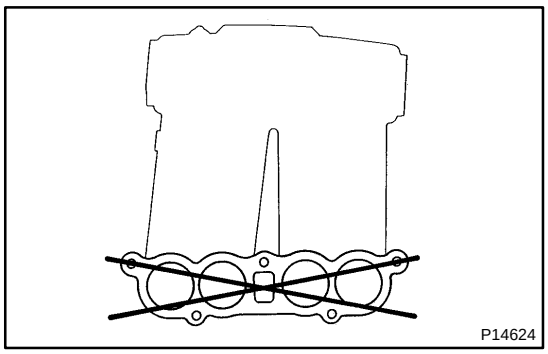

12. INSPECT AIR INTAKE CHAMBER

Using a precision straight edge and feeler gauge, measure the surface contacting the intake manifold for warpage.

Maximum warpage: 0.20 mm (0.0078 in.)

If warpage is greater than maximum, replace the air intake chamber.

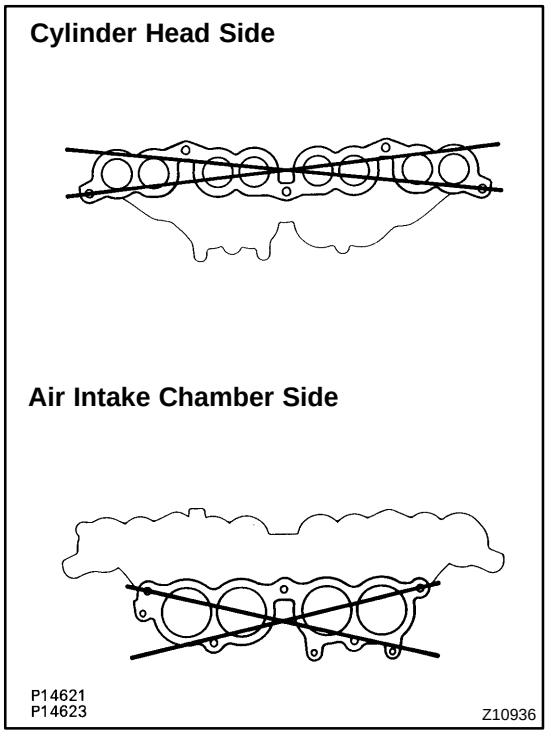

13. INSPECT INTAKE MANIFOLD

Using a precision straight edge and feeler gauge, measure the surface contacting the cylinder head and air intake chamber for warpage.

Maximum warpage: 0.20 mm (0.0078 in.)

If warpage is greater than maximum, replace the manifold.

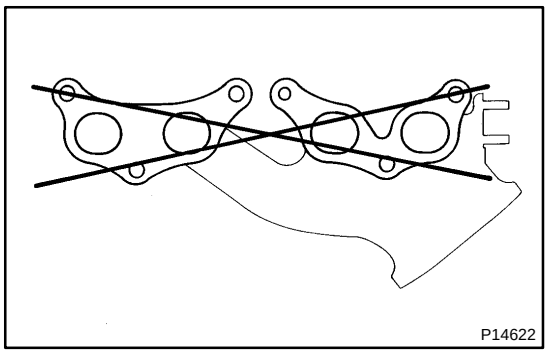

14. INSPECT EXHAUST MANIFOLD

Using a precision straight edge and feeler gauge, measure the surface contacting the cylinder head for warpage.

Maximum warpage: 0.50 mm (0.0197 in.)

If warpage is greater than maximum, replace the manifold.

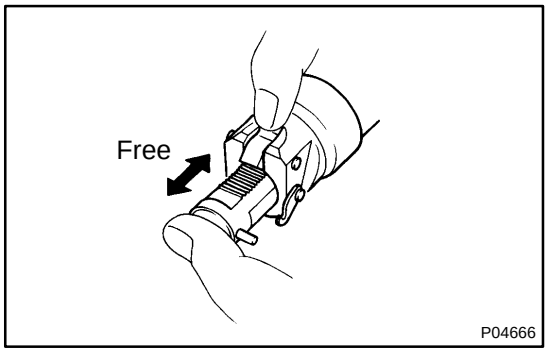

15. INSPECT CHAIN TENSIONER

(a) Check that the plunger moves smoothly when the ratchet pawl is raised with your finger.

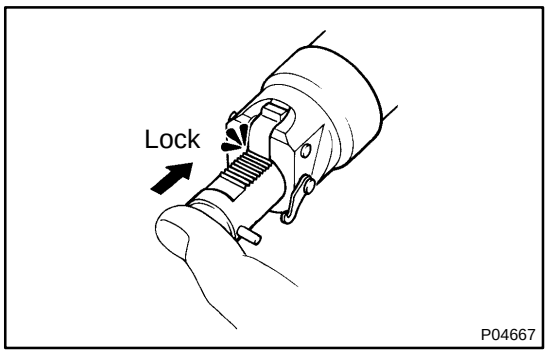

(b) Released the ratchet pawl and check that the plunger is locked in place by the ratchet pawl and does not move when pushed with your finger.

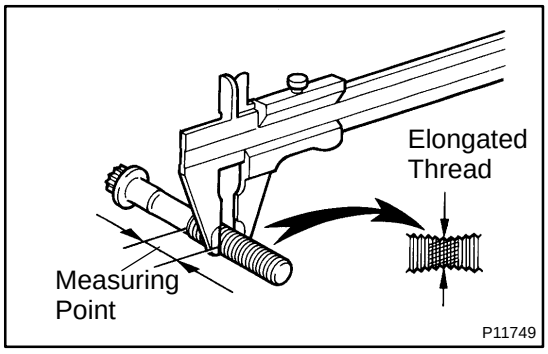

16. INSPECT CYLINDER HEAD BOLTS

Using vernier calipers, measure the minimum diameter of the elongated thread at the measuring point.

Standard outside diameter:
10.76 – 10.97 mm (0.4236 – 0.4319 in.)
Minimum outside diameter: 10.40 mm (0.4094 in.)

If the diameter is less than minimum, replace the bolt.

EM1MZ–01

INSTALLATION

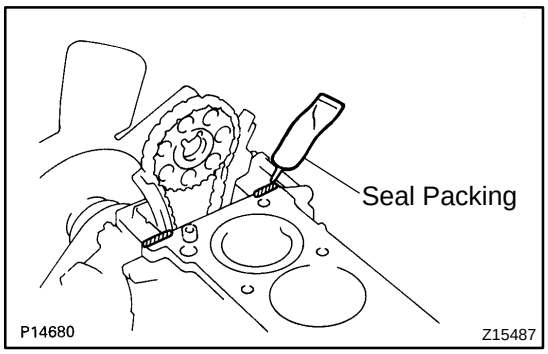

1. PLACE CYLINDER HEAD ON CYLINDER BLOCK

(a) Apply seal packing to the 2 locations as shown.

Seal packing: Part No. 08826–00080 or equivalent

NOTICE:

Do not apply too much seal packing.

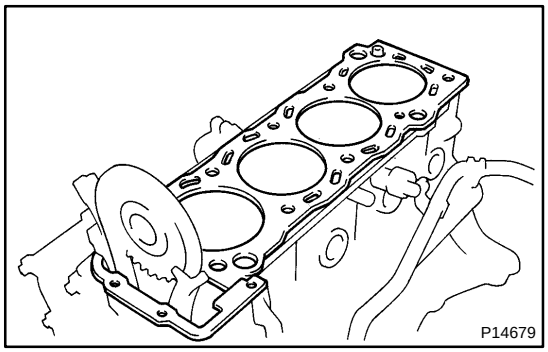

(b) Place a new cylinder head gasket in position on the cylinder block.

NOTICE:

Be careful of the installation direction.

(c) Place the cylinder head in position on the cylinder head gasket.

2. INSTALL CYLINDER HEAD BOLTS

HINT:

- The cylinder head bolts are tightened in 3 progressive steps (steps (b) and (d)).
- If any cylinder head bolt is broken or deformed, replace it.

(a) Apply a light coat of engine oil on the threads and under the heads of the cylinder head bolts.

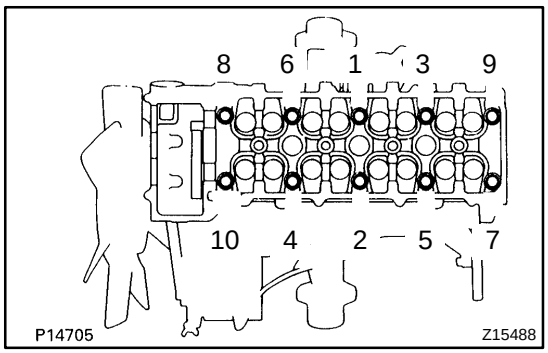

(b) Install and uniformly tighten the 10 cylinder head bolts and plate washers in several passes, in the sequence shown.

Torque: 39 N·m (400 kgf·cm, 29 ft·lbf)

If any of the cylinder head bolts does not meet the torque specification, replace the cylinder head bolt.

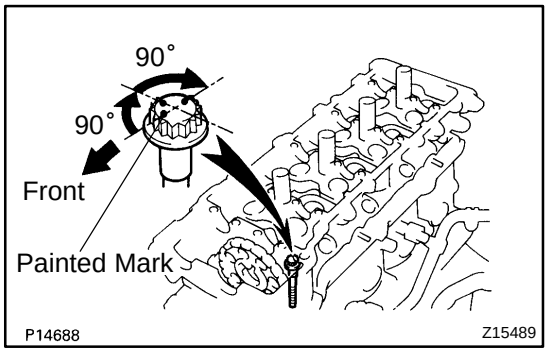

(c) Mark the front of the cylinder head bolt head with paint.

(d) Retighten the cylinder head bolts by 90˚ in the numerical order shown.

(e) Retighten the cylinder head bolts by an additional 90˚.

(f) Check that the painted mark is now facing rearward.

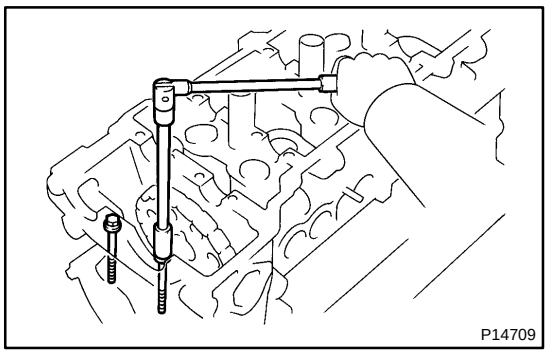

(g) Install the 2 bolts.
Torque: 21 N·m (210 kgf·cm, 15 ft·lbf)

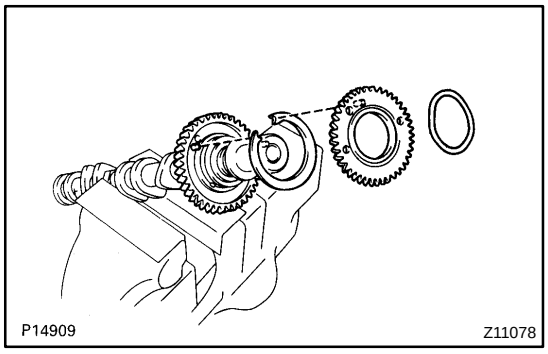

3. ASSEMBLE EXHAUST CAMSHAFT

(a) Mount the hexagon wrench head portion of the camshaft in a vise.

NOTICE:

Be careful not to damage the camshaft.

(b) Install the camshaft gear spring, the camshaft sub–gear and the wave washer.

HINT:

Align the pins on the gears with the spring ends.

(c) Using snap ring pliers, install the snap ring.

(d) Using SST, align the holes of the camshaft main gear and sub–gear by turning sub–gear clockwise, and install a service bolt.

SST 09960–10010 (09962–01000, 09963–00500)

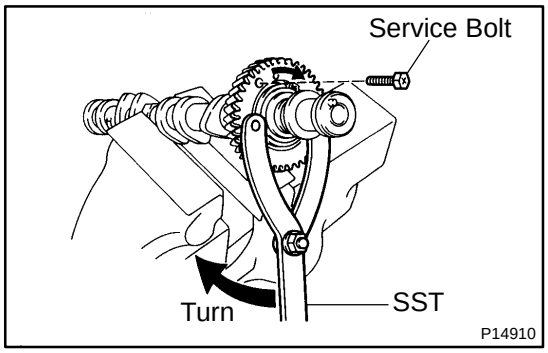

4. INSTALL CAMSHAFTS

NOTICE:

Since the thrust clearance of the camshaft is small, the camshaft must be kept level while it is being installed. If the camshaft is not kept level, the portion of the cylinder head receiving the shaft thrust may crack or be damaged, causing the camshaft to seize or break. To avoid this, these steps should be carried out.

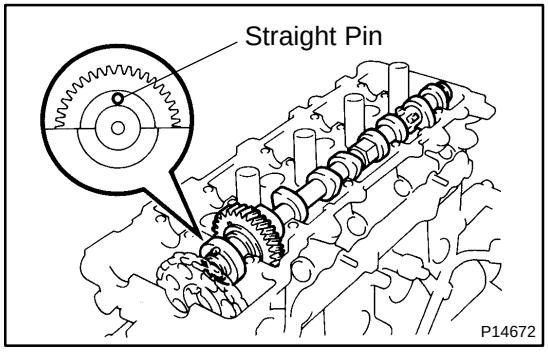

(a) Install the intake camshaft.

(1) Apply MP grease to the thrust portion of the intake camshaft.

(2) Place the intake camshaft with knock pin facing upward of camshaft angle on the cylinder head.

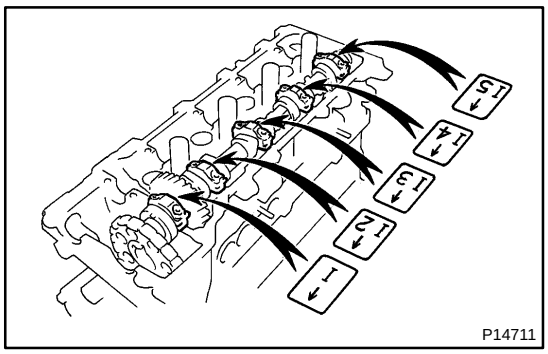

(3) Install the bearing caps in their proper locations.

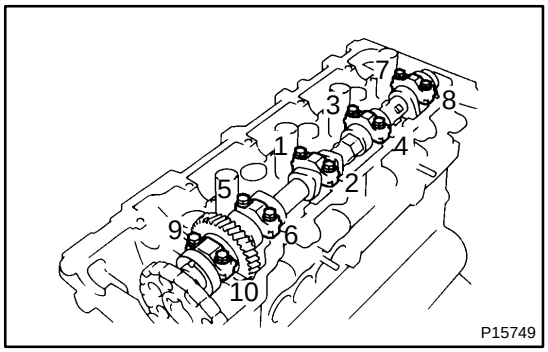

(4) Apply a light coat of engine oil on the threads and under the heads of the bearing cap bolts.
(5) Install and uniformly tighten the 10 bearing cap bolts in several passes, in the sequence shown.

Torque: 15.5 N·m (160 kgf·cm, 12 ft·lbf)

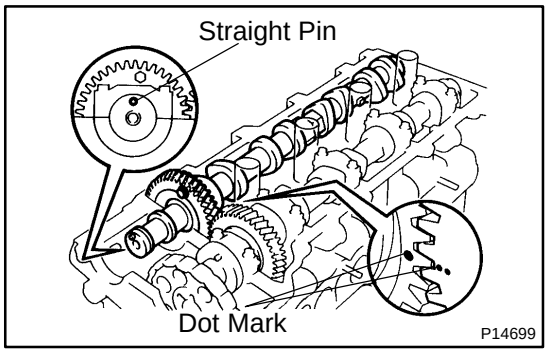

(b) Install the exhaust camshaft.
(1) Apply MP grease to the thrust portion of the exhaust camshaft.
(2) Engage the exhaust camshaft gear to the intake camshaft gear by matching the timing marks (1 and 2 dots) on each gear.

NOTICE:
There are also timing marks (for TDC) on each gear as shown in the illustration. Do not use these marks.

(3) Roll down the exhaust camshaft onto the bearing journals while engaging gears with each other.

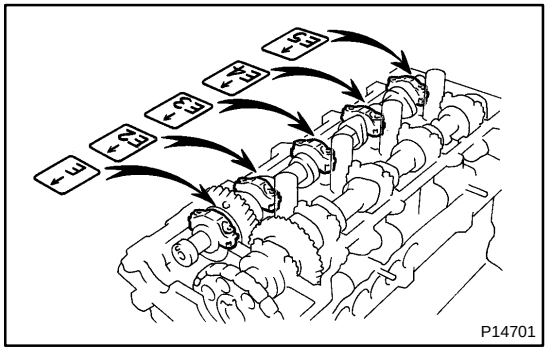

(4) Install the bearing caps in their proper locations.

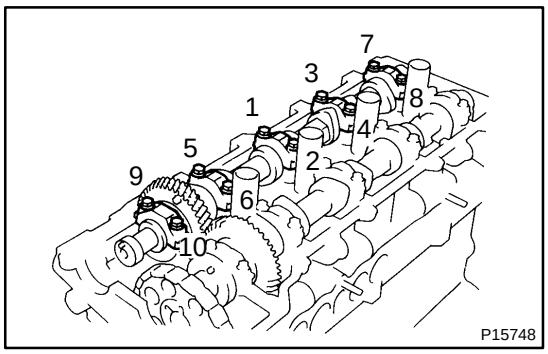

(5) Apply light coat of engine oil on the threads and under the heads of the bearing cap bolts.
(6) Install and uniformly tighten the 10 bearing cap bolts in several passes, in the sequence shown.

Torque: 15.5 N·m (160 kgf·cm, 12 ft·lbf)

(7) Remove the service bolt.
(8) Check that the intake and exhaust camshafts turn smoothly.

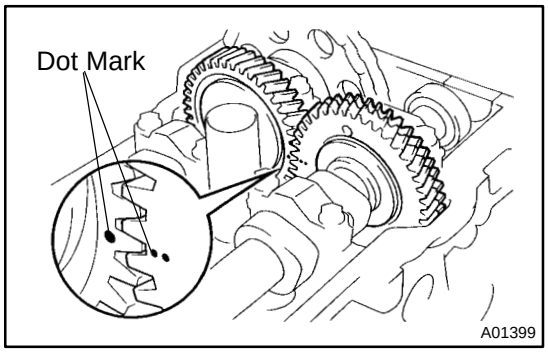

5. SET NO.1 CYLINDER TO TDC/COMPRESSION

(a) Turn the crankshaft pulley clockwise, and align its groove with timing mark ”0” of the timing chain cover.
(b) Turn the camshafts so that the timing marks with 1 and 2 dots will be in straight line on the cylinder head surface as shown in the illustration.

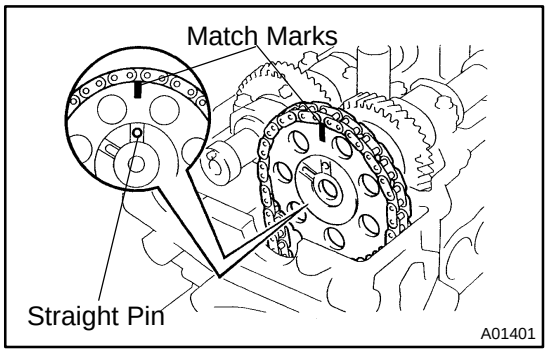

6. INSTALL CAMSHAFT TIMING GEAR

HINT:

Check that the match marks on the camshaft timing gear and timing chain are aligned.

(a) Place the gear over the straight pin of the intake camshaft.
(b) Hold the intake camshaft with a wrench, install and torque the bolt.

Torque: 73.5 N·m (750 kgf·cm, 54 ft·lbf)

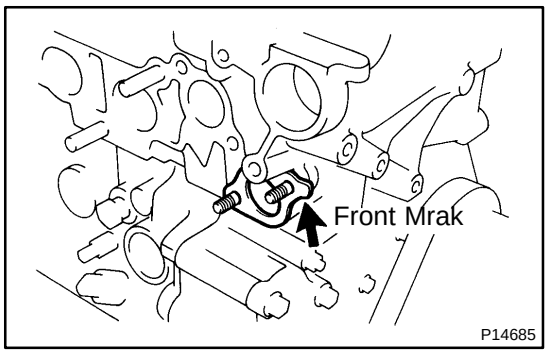

7. INSTALL CHAIN TENSIONER

(a) Place a new gasket so that the front mark is toward the front side.

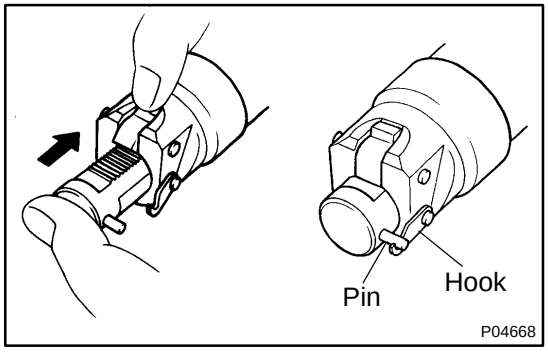

(b) Release the ratchet pawl, fully push in the plunger and apply the hook to the pin so that the plunger cannot spring out.
(c) Turn the crankshaft pulley clockwise to provide some slack for the chain on the tensioner side.

NOTICE:

Do not turn the pulley counterclockwise.

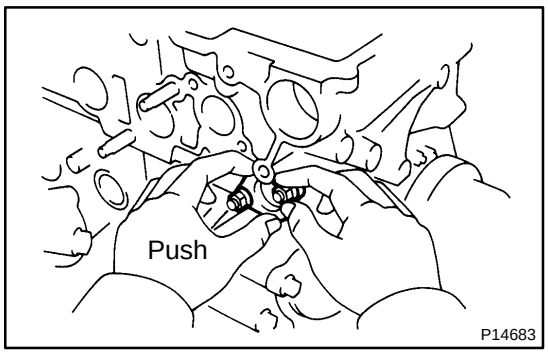

(d) Push the tensioner by hand until it touches the head installation surface, then install the 2 nuts.
(e) Tighten the 2 nuts.
Torque: 21 N·m (210 kgf·cm, 15 ft·lbf)
(f) Check that the hook of the tensioner is not released.

NOTICE:
If the plunger springs out during installation of the chain tensioner, repeat the operation in step (b) before installing the tensioner.

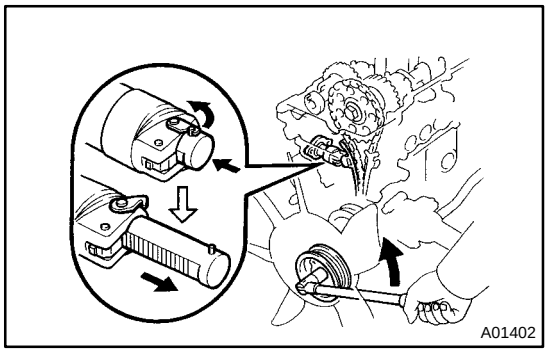

8. SET CHAIN TENSIONER

Turn the crankshaft to the left so that the hook of the chain tensioner is released from the pin of the plunger, causing the plunger to spring out and the slipper to be pushed in to the chain.



HINT:
If the plunger does not spring out, press the slipper into the chain tensioner with a screwdriver or your finger so that the hook is released and the plunger springs out.

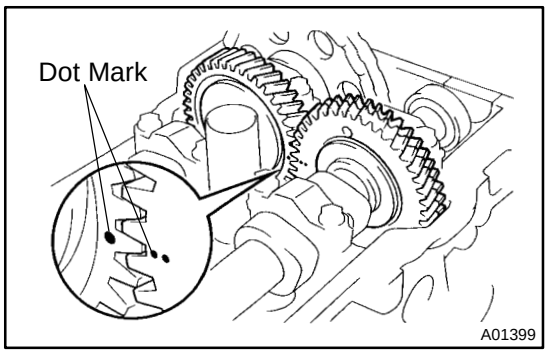

9. CHECK VALVE TIMING

(a) Turn the crankshaft pulley, and align its groove with timing mark ”0” of the timing chain cover.

NOTICE:
Always turn the crankshaft clockwise.

(b) Check that the timing marks (1 and 2 dots) of the camshaft drive and driven gears are in straight line on the cylinder head surface as shown in the illustration.

If not, turn the crankshaft 1 revolution (360˚) and align the marks as above.

10. CHECK AND ADJUST VALVE CLEARANCE (See page EM–5)

11. INSTALL SPARK PLUGS

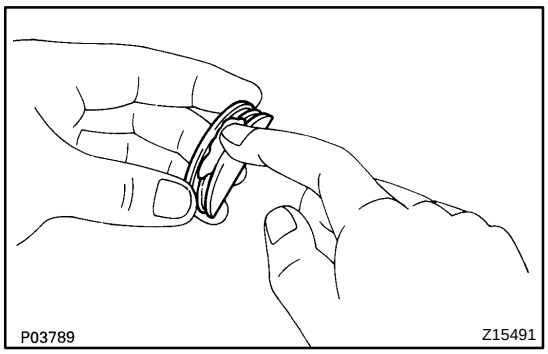

12. INSTALL SEMI–CIRCULAR PLUGS

(a) Remove any old packing (FIPG) material.

(b) Apply seal packing to the cylinder head installation surface of the semi–circular plugs.

Seal packing: Part No. 08826–00080 or equivalent

(c) Install the semi–circular plug to the cylinder head.

13. INSTALL CYLINDER HEAD COVER

14. INSTALL IGNITION COILS (WITH IGNITER)

Install the 4 ignition coils (with igniter) with the 4 bolts.

Torque: 7.5 N·m (77 kgf·cm, 66 in.·lbf)

15. INSTALL ENGINE WIRE BRACKETS

16. INSTALL FRONT ENGINE HANGER

Torque: 42 N·m (420 kgf·cm, 30 ft·lbf)

17. INSTALL CYLINDER HEAD REAR COVER

Install a new gasket and the rear cover with the 3 bolts.

Torque: 13.5 N·m (135 kgf·cm, 10 ft·lbf)

18. INSTALL WATER OUTLET

(a) Install a new gasket and the water outlet with the 2 bolts.

Torque: 20 N·m (200 kgf·cm, 14 ft·lbf)

(b) Connect the upper radiator hose.

19. INSTALL EXHAUST MANIFOLD

Install a new gasket and the exhaust manifold with the 6 nuts.

20. INSTALL FRONT EXHAUST PIPE

21. INSTALL INTAKE MANIFOLD

Install a new gasket and the intake manifold with the 3 bolts and 2 nuts.

Torque: 29 N·m (300 kgf·cm, 22 ft·lbf)

22. INSTALL INJECTORS AND DELIVERY PIPE (See page SF–20)

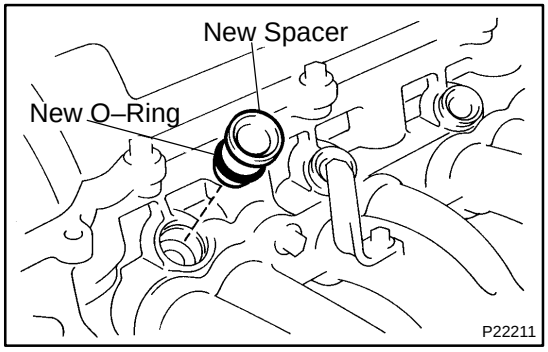

HINT:

When using a new cylinder head, spacers must be installed. Apply a light coat of gasoline to a new O–ring and install it to a new spacer.

23. INSTALL FUEL RETURN PIPE

24. INSTALL FUEL INLET PIPE

Install the fuel inlet pipe and 4 new gaskets with 2 union bolts.

Torque: 29 N·m (300 kgf·cm, 22 ft·lbf)

25. CONNECT INJECTOR CONNECTORS

26. INSTALL AIR INTAKE CHAMBER ASSEMBLY

(a) Install a new gasket and the air intake chamber assembly with the 3 bolts and 2 nuts.
Torque: 21 N·m (210 kgf·cm, 15 ft·lbf)
(b) Connect the EVAP hose to throttle body.
(c) Connect the brake booster vacuum hose to union.
(d) Connect the water bypass hose to water bypass pipe.
(e) Connect the water bypass hose to cylinder head rear cover.

27. INSTALL INTAKE CHAMBER STAY
Torque: 20 N·m (200 kgf·cm, 15 ft·lbf)
28. CONNECT ENGINE WIRE
29. INSTALL PCV HOSES
30. w/ PS:
INSTALL PS PUMP AND BRACKET
(a) Install the PS pump bracket with the 4 bolts.
Torque: 20 N·m (200 kgf·cm, 15 ft·lbf)
(b) Connect the PS pump to the bracket with the 2 bolts.
Torque: 58 N·m (590 kgf·cm, 43 ft·lbf)
(c) Connect the 2 air hoses to the throttle body and air intake chamber.

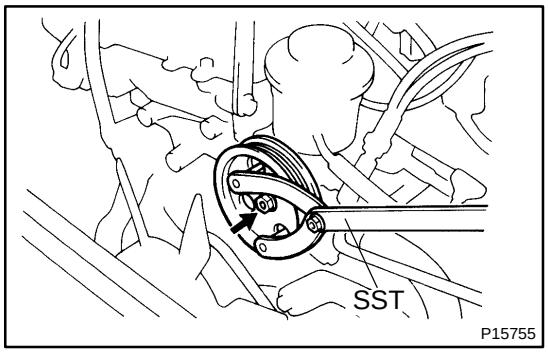

(d) Using SST, install the PS pump pulley with the nut.
SST 09960–10010 (09962–01000, 09963–01000)
Torque: 43 N·m (440 kgf·cm, 32 ft·lbf)

31. w/ PS:
INSTALL DRIVE BELT IDLER PULLEY FOR PS PUMP
Torque: 20 N·m (200 kgf·cm, 14 ft·lbf)
32. INSTALL DRIVE BELT FOR PS PUMP
(See page SR–3)
33. INSTALL OIL DIPSTICK GUIDE
Torque: 20 N·m (200 kgf·cm, 15 ft·lbf)
34. INSTALL INTAKE AIR CONNECTOR
Torque: 18 N·m (185 kgf·cm, 13 ft·lbf)
35. INSTALL AIR CLEANER CAP, MAF METER AND RESONATOR ASSEMBLY

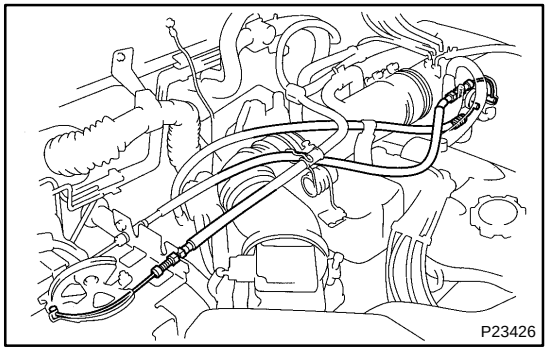

36. CONNECT CABLES:
(a) Connect the accelerator cable to the throttle body.
(b) A/T:
Connect the throttle cable to the throttle body.
(c) w/ Cruise Control System:
Connect the cruise control cable to the actuator, and install the actuator cover.

37. FILL WITH ENGINE COOLANT
38. START ENGINE AND CHECK FOR LEAKS
39. VEHICLE ROAD TEST

Check for abnormal noise, shock, slippage, correct shift points and smooth operation.

40. RECHECK ENGINE COOLANT LEVEL

EM16T–01

REASSEMBLY

HINT:

- Thoroughly clean all parts to be assembled.
- Before installing the parts, apply fresh engine oil to all sliding and rotating surfaces.
- Replace all gaskets and oil seals with new ones.

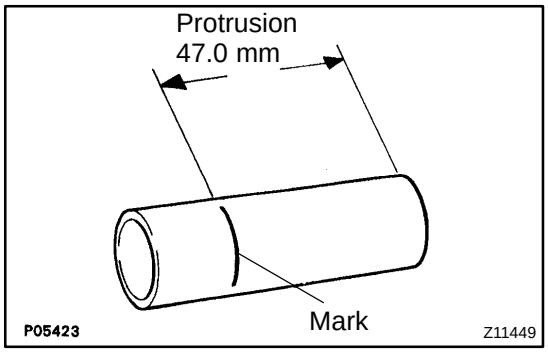

1. INSTALL SPARK PLUG TUBES

HINT:

When using a new cylinder head, spark plug tubes must be installed.

(a) Mark the standard position away from the edge, onto the spark plug tube.

Standard protrusion: 47.0 mm (1.850 in.)

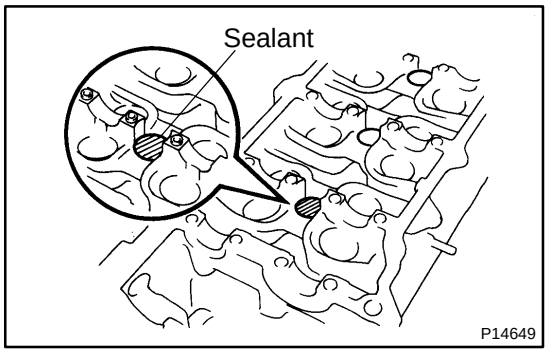

(b) Apply adhesive to the spark plug tube hole of the cylinder head.

Adhesive:
Part No. 08833–00070, Adhesive 1324, THREE BOND 1324 or equivalent

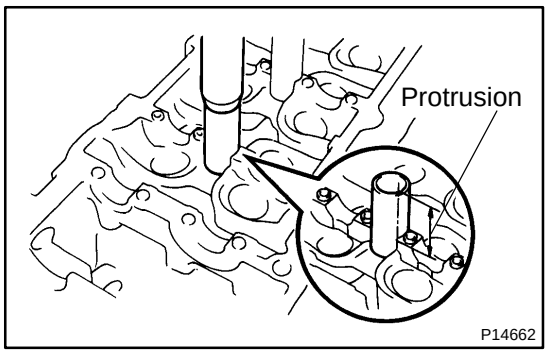

(c) Using a press, press in a new spark plug tube until there is 47.0 mm (1.850 in.) protruding from the camshaft bearing cap installation surface of the cylinder head.

NOTICE:

Avoid pressing a new spark plug tube in too far by measuring the amount of protrusion while pressing.

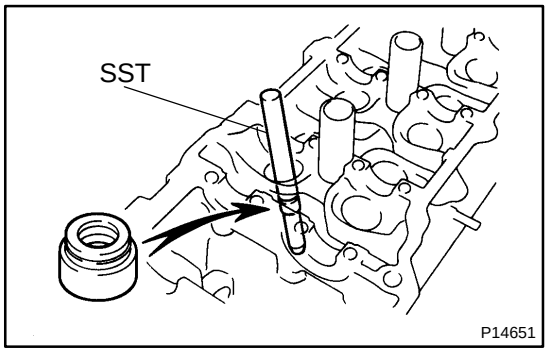

2. INSTALL VALVES

(a) Using SST, push in a new oil seal.
SST 09236–00101 (09236–15010)

HINT:

Different oil seals are used for the intake and exhaust.

Code mark (Intake side only): H

(b) Install the alve, spring seat, valve spring and spring retainer.

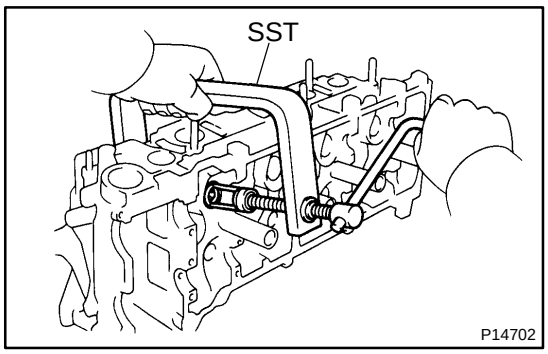

(c) Using SST, compress the valve spring and place the 2 keepers around the valve stem.
SST 09202–70020 (09202–00010)

(d) Using a plastic–faced hammer, lightly tap the valve stem tip to ensure a proper fit.

3. INSTALL VALVE LIFTERS AND SHIMS

(a) Install the valve lifter and shim.

(b) Check that the valve lifter rotates smoothly by hand.

EM1MY–01

REMOVAL

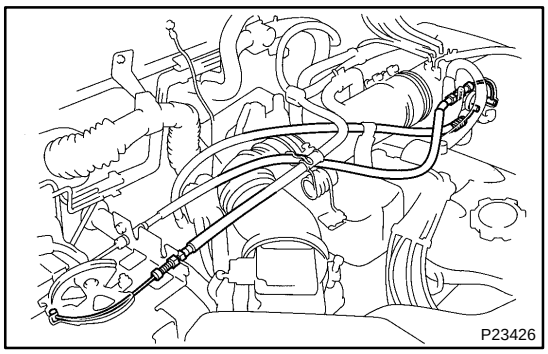

1. DRAIN ENGINE COOLANT

2. DISCONNECT THESE CABLES:

(a) Disconnect the accelerator cable from the throttle body.

(b) A/T:
Disconnect the throttle cable from the throttle body.

(c) w/ Cruise Control System:
Remove the actuator cover, and disconnect the cruise control cable from the actuator.

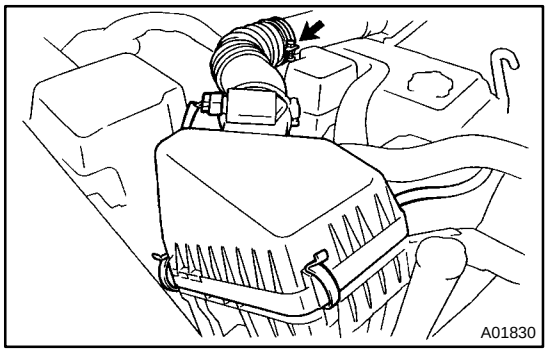

3. REMOVE AIR CLEANER CAP, MAF METER AND RESONATOR ASSEMBLY

(a) Disconnect the 3 wire clamps for the engine wire.

(b) Disconnect the MAF meter connectors.

(c) Disconnect the air hose from the air cleaner cap.

(d) Loosen the air cleaner hose clamp.

(e) Loosen the 4 clips, and remove the air cleaner cap, MAF meter and resonator assembly.

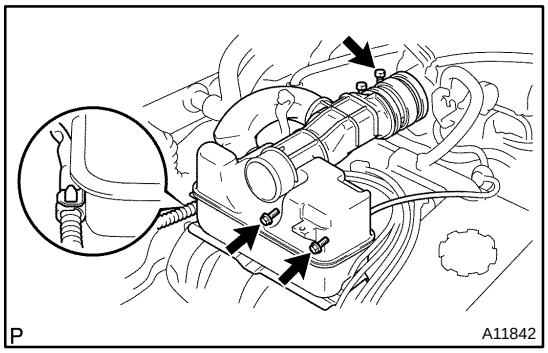

4. REMOVE INTAKE AIR CONNECTOR

(a) Disconnect the vacuum hose for fuel pressure regulator.

(b) Disconnect the wire clamp for engine wire.

(c) Loosen the hose clamp, and remove the 2 bolts and intake air connector.

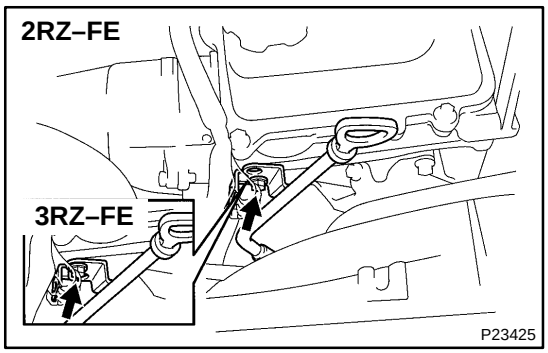

5. REMOVE OIL DIPSTICK GUIDE

(a) Remove the bolt, dipstick guide and engine wire bracket.

(b) Remove the O–ring from the dipstick guide.

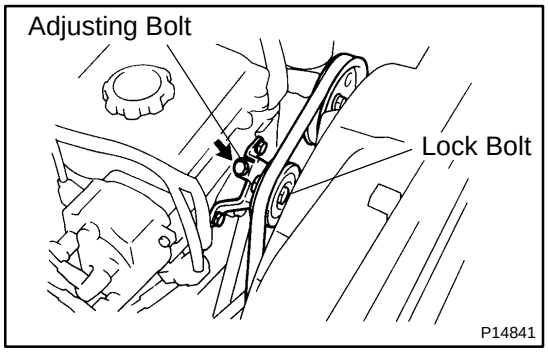

6. w/ PS:
REMOVE DRIVE BELT FOR PS PUMP

Loosen the lock bolt and adjusting bolt, and remove the drive belt.

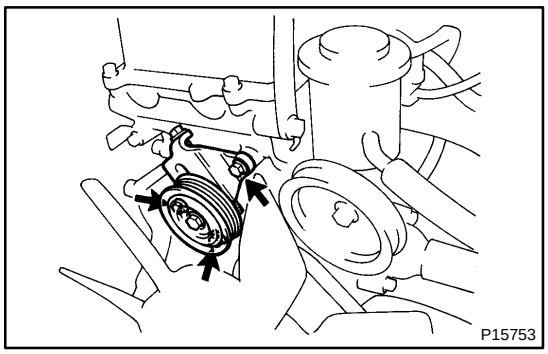

7. w/ PS:
REMOVE DRIVE BELT IDLER PULLEY FOR PS PUMP
Remove the 3 bolts and idler pulley.

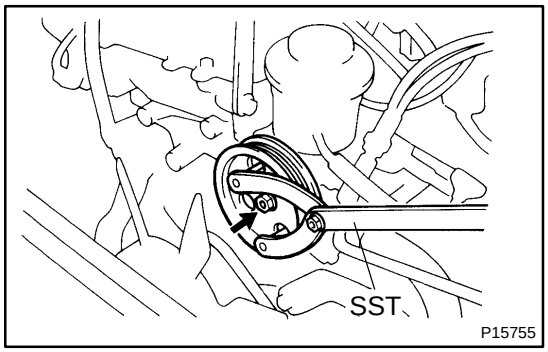

8. w/ PS:
REMOVE PS PUMP AND BRACKET
(a) Using SST, remove the nut and PS pump pulley.
SST 09960–10010 (09962–01000, 09963–01000)

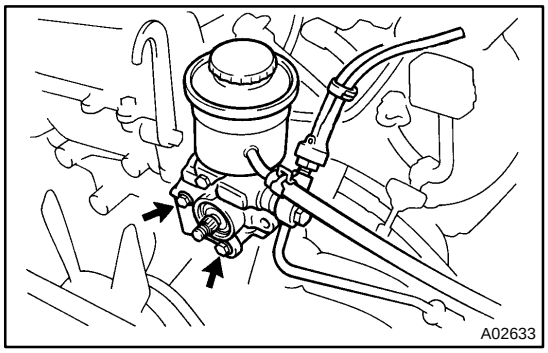

(b) Disconnect the 2 air hoses from the throttle body and air intake chamber.
(c) Remove the 2 bolts, and disconnect the PS pump.
HINT:
Put aside the pump and suspend it.

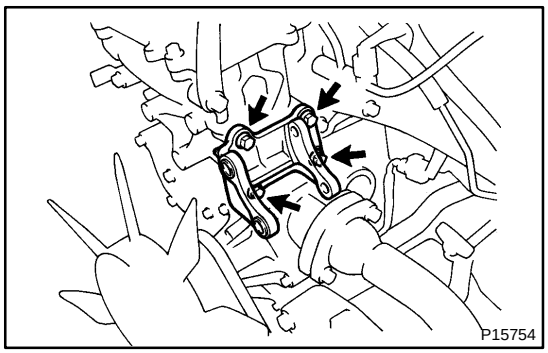

(d) Remove the 4 bolts and PS pump bracket.

9. REMOVE PCV HOSES

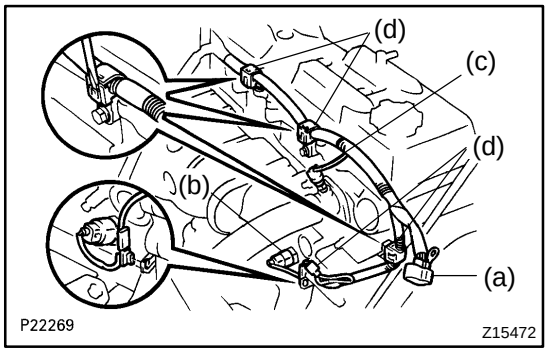

10. DISCONNECT ENGINE WIRE
(a) Disconnect the A/C compressor connector.
(b) Disconnect the oil pressure sensor connector and clamp.
(c) Disconnect the ECT sender gauge connector.
(d) Disconnect the 4 engine wire clamps and engine wire.
(e) Disconnect the ECT sensor connector.
(f) Remove the bolt and ground strap from the cowl top panel.

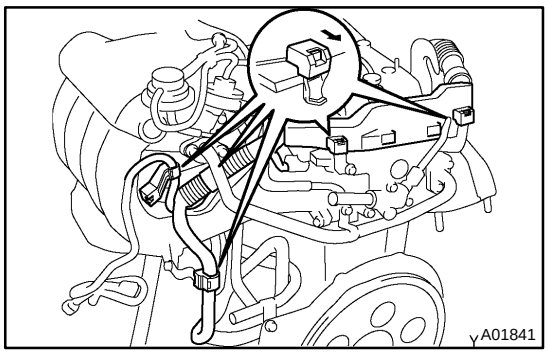

(g) Remove the engine wire from the air intake chamber.
(h) Disconnect the 2 engine wire clamps and engine wire.

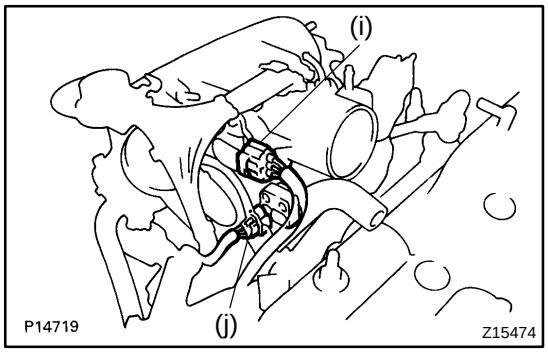

(i) Disconnect the throttle position sensor connector.
(j) Disconnect the IAC valve connector.

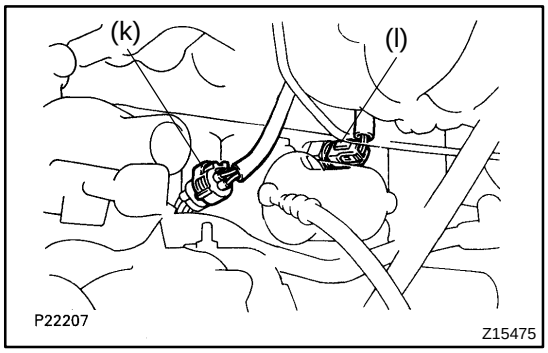

(k) Disconnect the crankshaft position sensor connector.
(l) Disconnect the knock sensor connector.

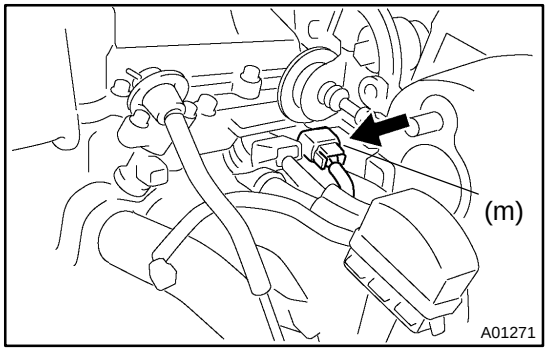

(m) Disconnect the camshaft position sensor connector.

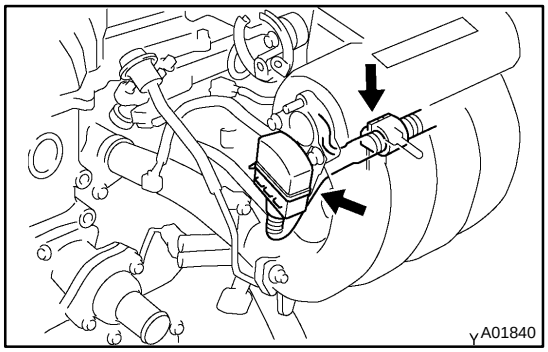

(n) Disconnect the DLC1 from the bracket.
(o) Disconnect the engine wire clamp.

11. REMOVE INTAKE CHAMBER STAY

Remove the 2 bolts and intake chamber stay.

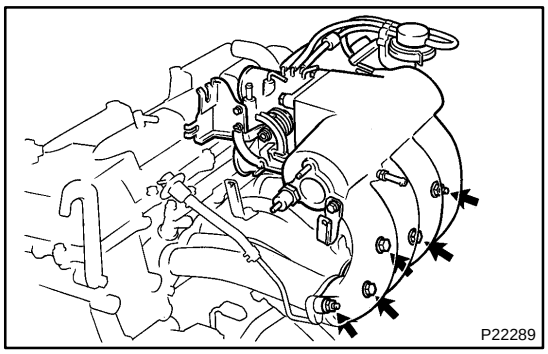

12. REMOVE AIR INTAKE CHAMBER ASSEMBLY

(a) Disconnect the EVAP hose from throttle body.
(b) Disconnect the brake booster vacuum hose from union.
(c) Disconnect the water bypass hose from water bypass pipe.
(d) Disconnect the water bypass hose from cylinder head rear cover.
(e) Remove the 3 bolts, 2 nuts, air intake chamber assembly and gasket.

13. DISCONNECT INJECTOR CONNECTORS

14. REMOVE FUEL INLET PIPE

Remove the 2 union bolts, 4 gaskets and fuel inlet pipe.

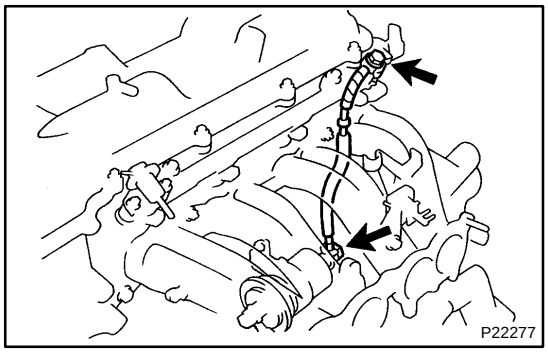

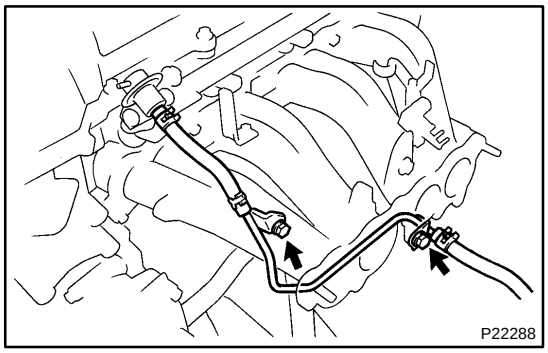

15. REMOVE FUEL RETURN PIPE

(a) Disconnect the fuel return hose from fuel pressure regulator.
(b) Disconnect the fuel return hose from fuel return pipe
(c) Remove the 2 bolts and fuel return pipe.

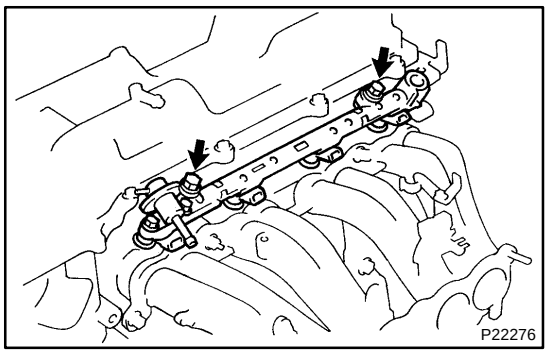

16. REMOVE DELIVERY PIPE AND INJECTORS

(a) Remove the 2 bolts and delivery pipe together with the 4 injectors.

NOTICE:

Be careful not to drop the injectors when removing the delivery pipe.

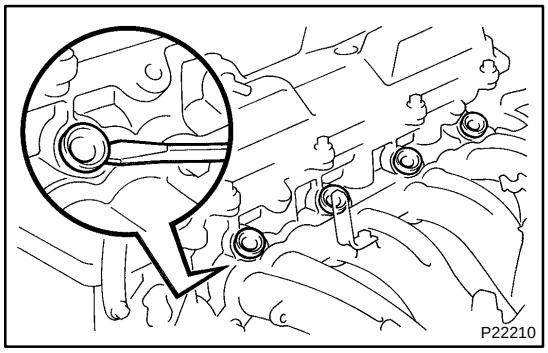

(b) Remove the 4 insulators from the 4 spacers.
(c) Pull out the 4 injectors from the delivery pipe.
(d) Remove the O–ring and grommet from each injector.
(e) Using a screwdriver, pry out the 4 spacers.

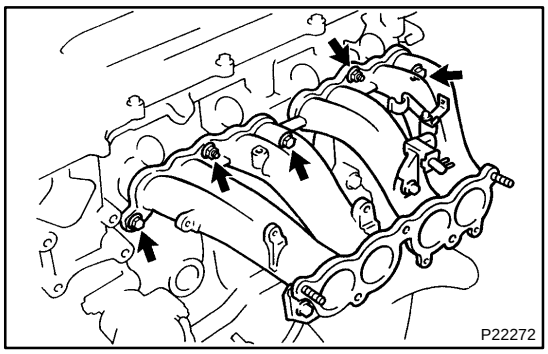

17. REMOVE INTAKE MANIFOLD

Remove the 3 bolts, 2 nuts, intake manifold and gasket.

18. REMOVE FRONT EXHAUST PIPE

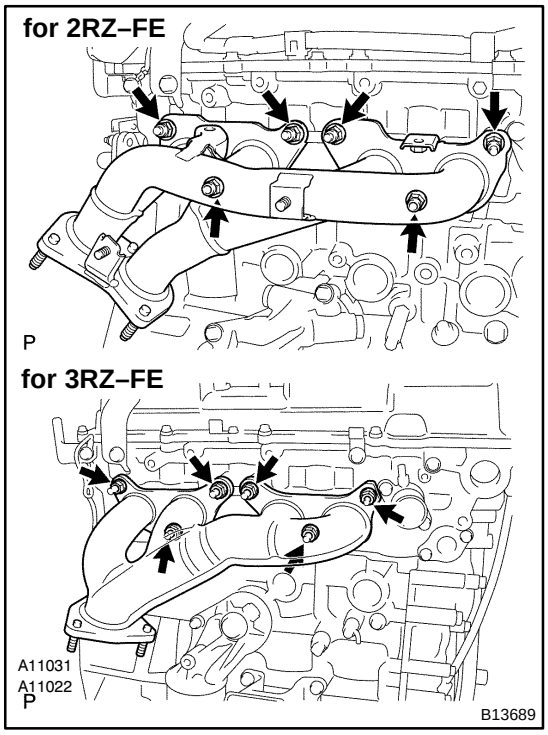

19. REMOVE EXHAUST MANIFOLD

Remove the 6 nuts, exhaust manifold and gasket.

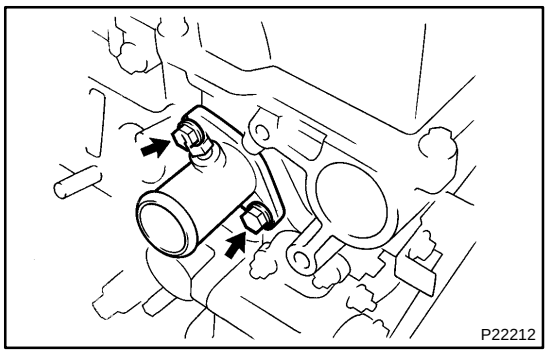

20. REMOVE WATER OUTLET

(a) Disconnect the upper radiator hose.

(b) Remove the 2 bolts, water outlet and gasket.

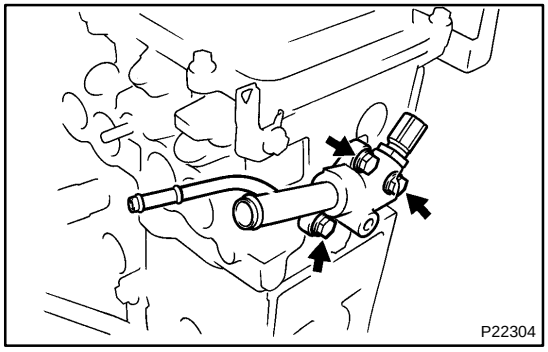

21. REMOVE CYLINDER HEAD REAR COVER

Remove the 3 bolts, cylinder head rear cover and gasket.

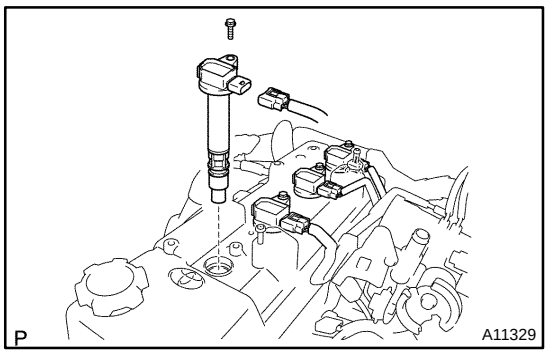

22. REMOVE IGNITION COILS (WITH IGNITER)

(a) Disconnect the 4 ignition coil connectors.

(b) Remove the 4 bolts, and pull out the 4 ignition coils.

23. REMOVE SPARK PLUGS

24. REMOVE FRONT ENGINE HANGER

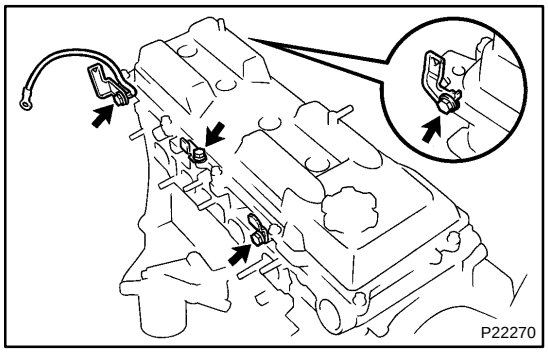

25. REMOVE ENGINE WIRE BRACKETS

Remove the 4 bolts, 4 wire brackets and ground strap.

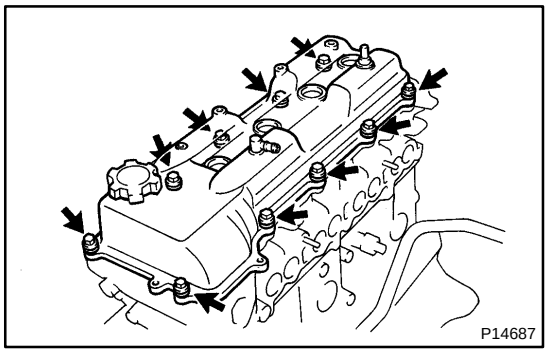

26. REMOVE CYLINDER HEAD COVER

Remove the 10 bolts, 10 seal washers, cylinder head cover and gasket.

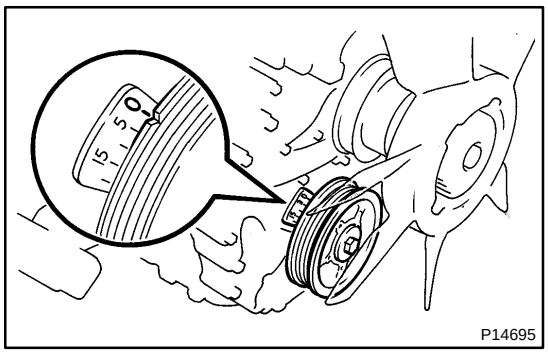

27. SET NO.1 CYLINDER TO TDC/COMPRESSION

(a) Turn the crankshaft pulley clockwise and align its groove with the ”0” mark on the timing chain cover.

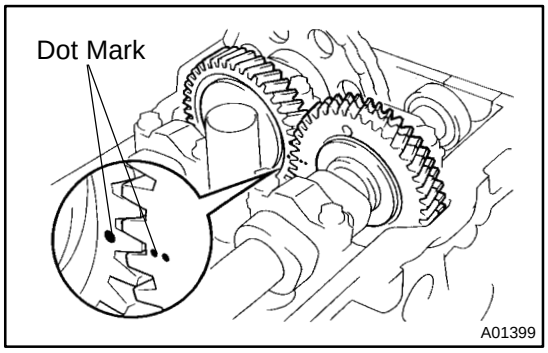

(b) Check that the timing marks (1 and 2 dots) of the camshaft drive and driven gears are in straight line on the cylinder head surface as shown in the illustration. If not, turn the crankshaft 1 revolution (360˚) and align the marks as above.

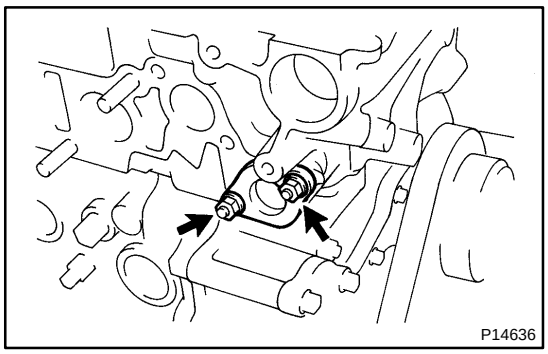

28. REMOVE CHAIN TENSIONER

Remove the 2 nuts, chain tensioner and gasket.

29. REMOVE SEMI–CIRCULAR PLUGS

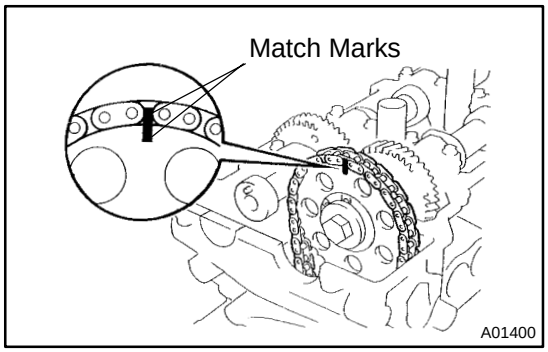

30. REMOVE CAMSHAFT TIMING GEAR

(a) Place the match marks on the camshaft timing gear and No.1 timing chain.

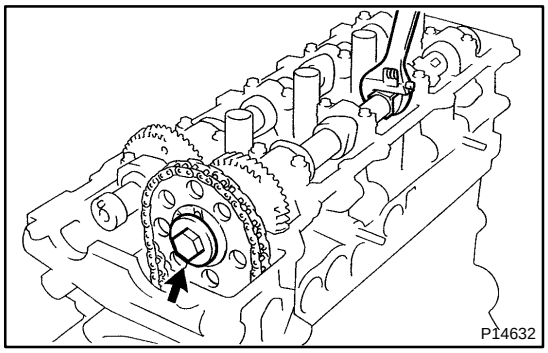

(b) Hold the intake camshaft with a wrench and remove the bolt.

(c) Remove the camshaft timing gear and chain from the intake camshaft and leave on the slipper and damper.

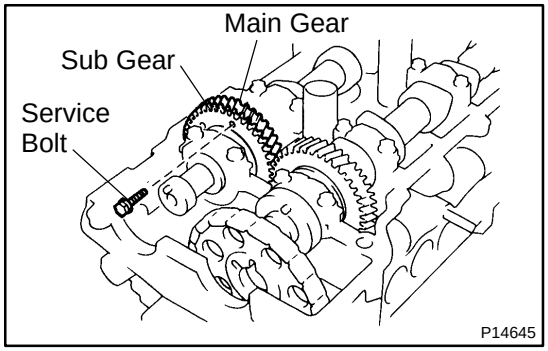

31. REMOVE CAMSHAFTS

NOTICE:

Since the thrust clearance of the camshaft is small, the camshaft must be kept level while it is being removed. If the camshaft is not kept level, the portion of the cylinder head receiving the shaft thrust may crack or be damaged, causing the camshaft to seize or break. To avoid this, these steps should be carried out.

(a) Remove the exhaust camshafts.

(1) Bring the service bolt hole of the driven sub–gear upward by turning the hexagon wrench head portion of the exhaust camshaft with a wrench.

(2) Secure the exhaust camshaft sub–gear to the main gear with a service bolt.

Recommended service bolt:

Thread diameter	6 mm
Thread pitch	1.0 mm
Bolt length	16 – 20 mm (0.63 – 0.79 in.)

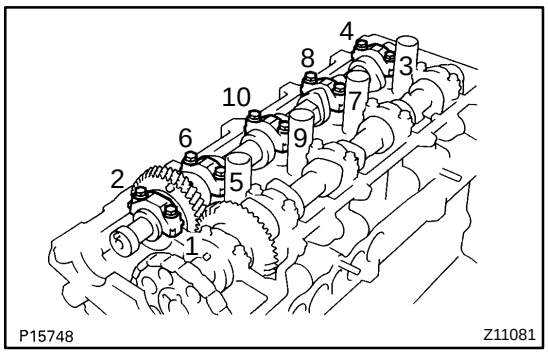

HINT:
When removing the camshaft, make sure that the torsional spring force of the sub–gear has been eliminated by the above operation.

(3) Uniformly loosen and remove the 10 bearing cap bolts in several passes, in the sequence shown.
(4) Remove the 5 bearing caps and camshaft.

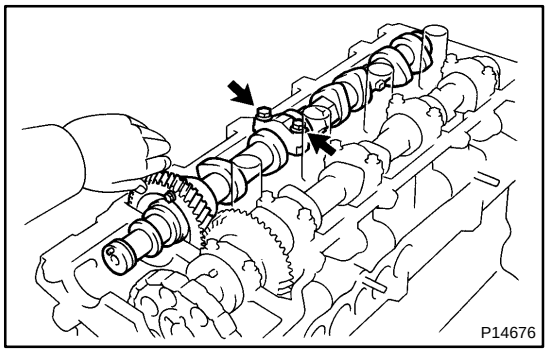

HINT:
If the camshaft is not being lifted out straight and level, reinstall the No.3 bearing cap with the 2 bolts. Then alternately loosen and remove the bearing cap bolts with the camshaft gear pulled up.

NOTICE:
Do not pry on or attempt to force the camshaft with a tool or other object.

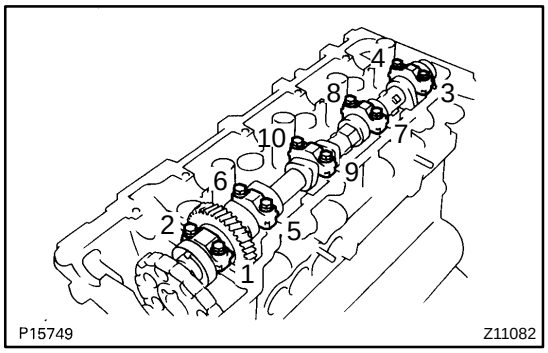

(b) Remove intake camshaft.
(1) Uniformly loosen and remove the 10 bearing cap bolts in several passes, in the sequence shown.
(2) Remove the 5 bearing caps and camshaft.

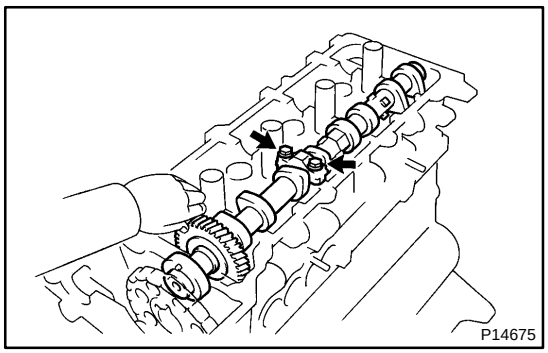

HINT:
If the camshaft is not being lifted out straight and level, reinstall the No.3 bearing cap with the 2 bolts. Then alternately loosen and remove the 2 bearing cap bolts with the camshaft gear pulled up.

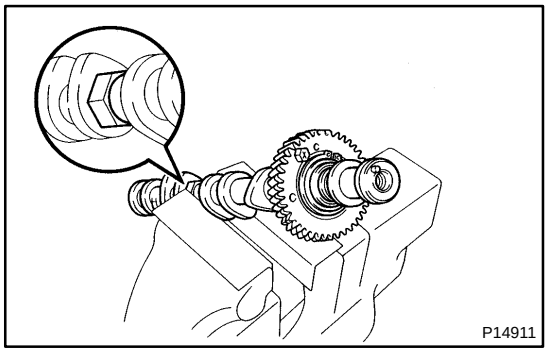

32. DISASSEMBLE EXHAUST CAMSHAFT

(a) Mount the hexagon wrench head portion of the camshaft in a vise.

NOTICE:
Be careful not to damage the camshaft.

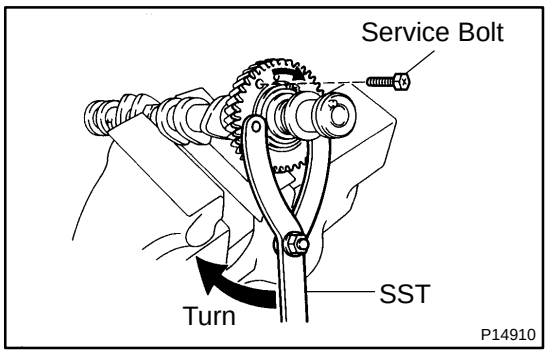

(b) Using SST, turn the sub–gear clockwise, and remove the service bolt.
SST 09960–10010 (09962–01000, 09963–00500)

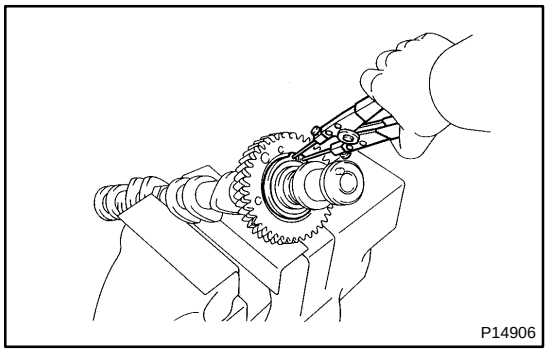

(c) Using snap ring pliers, remove the snap ring.
(d) Remove these parts the wave washer, the camshaft sub–gear and the camshaft gear spring.

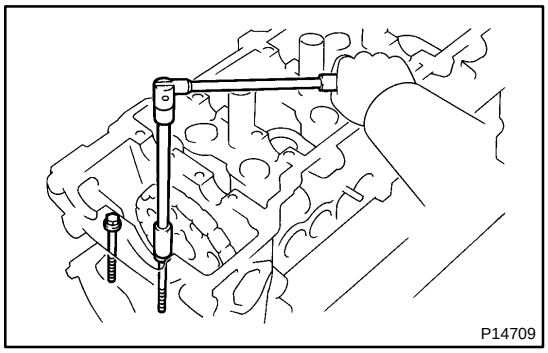

33. REMOVE CYLINDER HEAD
(a) Remove the 2 bolts in front of the head before the other head bolts are removed.

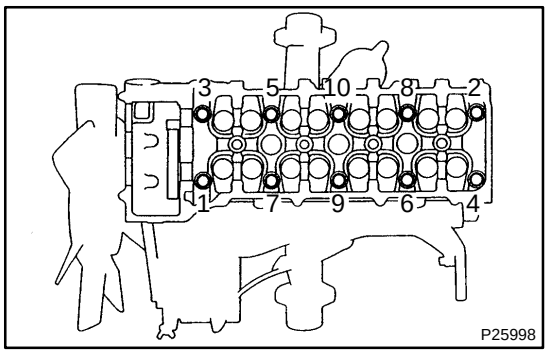

(b) Uniformly loosen and remove the 10 cylinder head bolts in several passes, in the sequence shown.

NOTICE:
Cylinder head warpage or cracking could result from removing bolts in incorrect order.

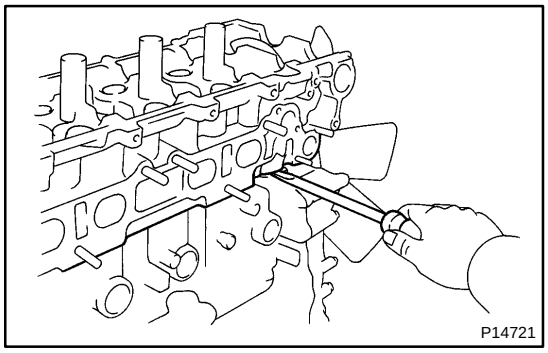

(c) Lift the cylinder head from the dowels on the cylinder block, and place the cylinder head on wooden blocks on a bench.

HINT:
If the cylinder head is difficult to lift off, pry between the cylinder head and cylinder block with a screwdriver.

NOTICE:
Be careful not to damage the contact surfaces of the cylinder head and cylinder block.

EM16S–01

REPLACEMENT

1. REPLACE VALVE GUIDE BUSHINGS

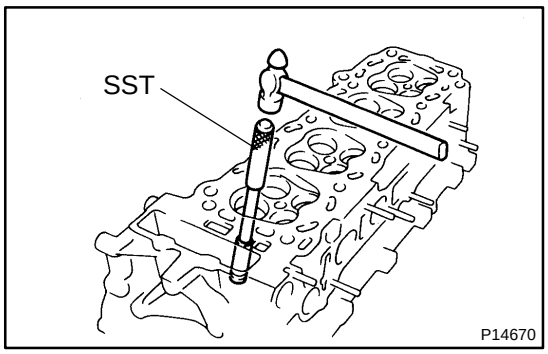

(a) Gradually heat the cylinder head to 80 – 100˚C (176 – 212˚F).

(b) Using SST and a hammer, tap out the guide bushing.
SST 09201–10000 (09201–01060), 09950–70010 (09951–07150)

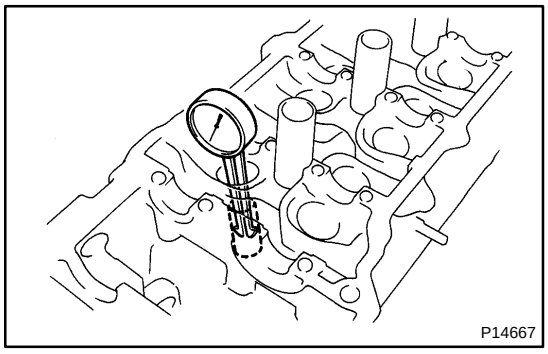

(c) Using a caliper gauge, measure the bushing bore diameter of the cylinder head.

Both intake and exhaust

Bushing bore diameter mm (in.)	Bushing size
11.000 – 11.027 (0.4331 – 0.4341)	Use STD
11.050 – 11.077 (0.4350 – 0.4361)	Use O/S 0.05

(d) Select a new guide bushing (STD size or O/S 0.05).

If the bushing bore diameter of the cylinder head is greater than 11.027 mm (0.4341 in.), machine the bushing bore to these dimension:

11.050 – 11.077 mm (0.4350 – 0.4361 in.)

If the bushing bore diameter of the cylinder head is greater than 11.077 mm (0.4361 in.), replace the cylinder head.

(e) Gradually heat the cylinder head to 80 – 100˚C (176 – 212˚F).

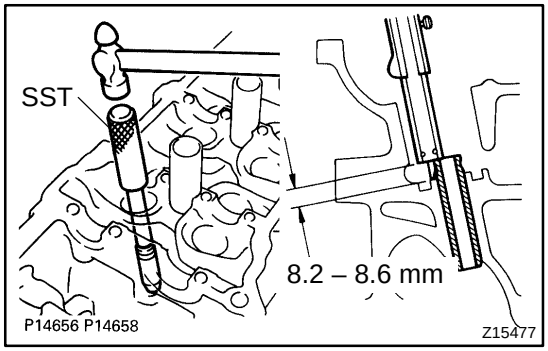

(f) Using SST and a hammer, tap in a new guide bushing to where there 8.2 – 8.6 mm (0.323 – 0.339 in.) protruding from the cylinder head.
SST 09201–10000 (09201–01060), 09950–70010 (09951–07150)

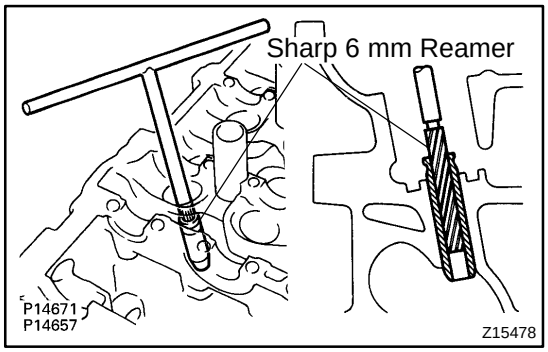

(g) Using a sharp 6 mm reamer, ream the guide bushing to obtain the standard specified clearance (See step 9 on the previous page) between the guide bushing and valve stem.

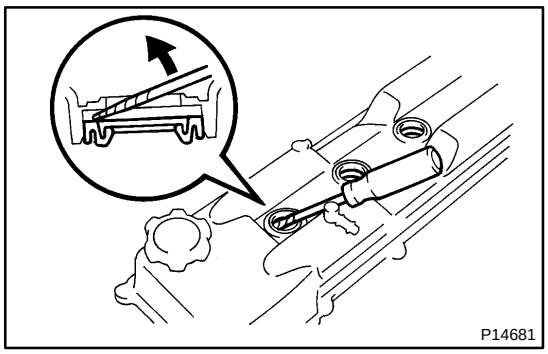

2. REPLACE SPARK PLUG TUBE GASKETS

(a) Using a screwdriver, pry out the tube gasket.

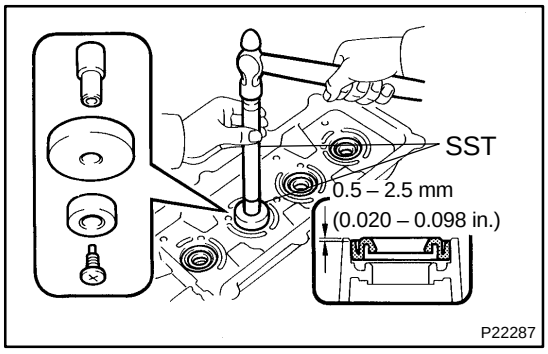

(b) Using SST and a hammer, tap in a new tube gasket as shown in the illustration.

SST 09950–60010 (09951–00260, 09951–00490, 09952–06010), 09950–70010 (09951–07150)

(c) Apply a light coat of MP grease to the gasket lip.

ENGINE UNIT (2WD)

COMPONENTS

EM1N0–02

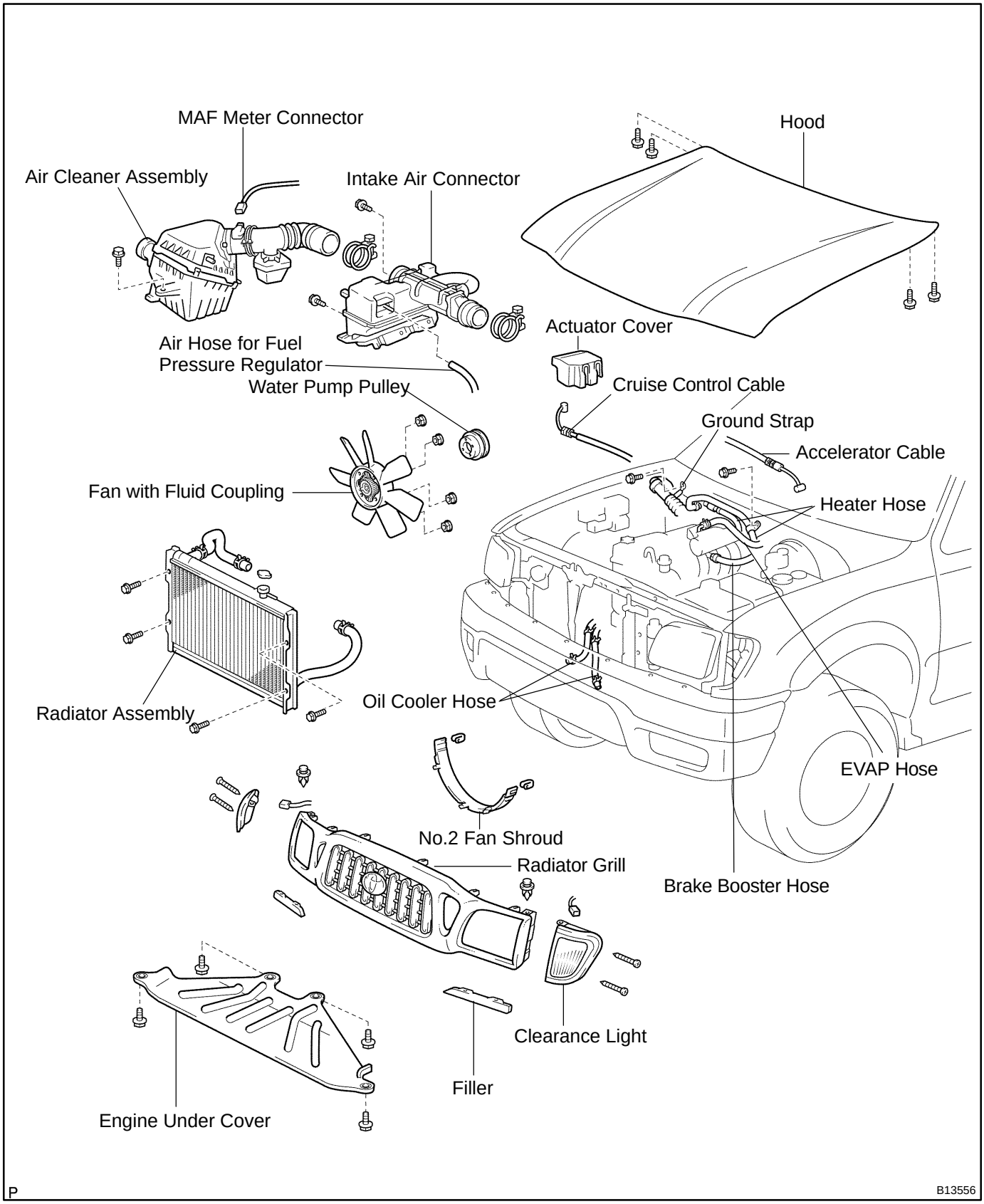

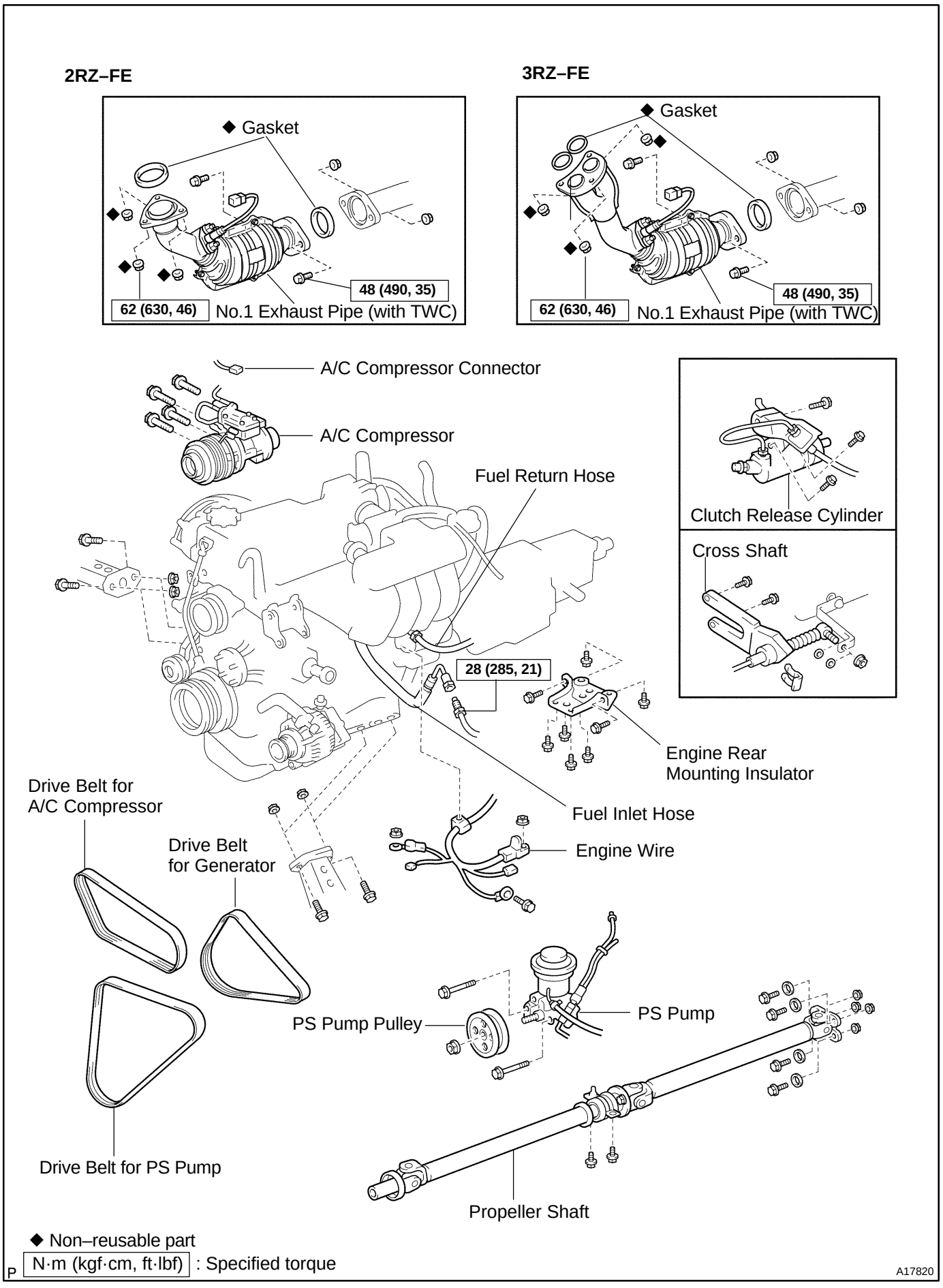
2RZ–FE
◆ Gasket
48 (490, 35)
62 (630, 46)
No.1 Exhaust Pipe (with TWC)
3RZ–FE
◆ Gasket
48 (490, 35)
62 (630, 46)
No.1 Exhaust Pipe (with TWC)
A/C Compressor Connector
A/C Compressor
Fuel Return Hose
Clutch Release Cylinder
Cross Shaft
28 (285, 21)
Engine Rear
Mounting Insulator
Drive Belt for
A/C Compressor
Drive Belt
for Generator
Fuel Inlet Hose
Engine Wire
PS Pump Pulley
PS Pump
Drive Belt for PS Pump
Propeller Shaft
◆ Non–reusable part
N·m (kgf·cm, ft·lbf) : Specified torque
A17820

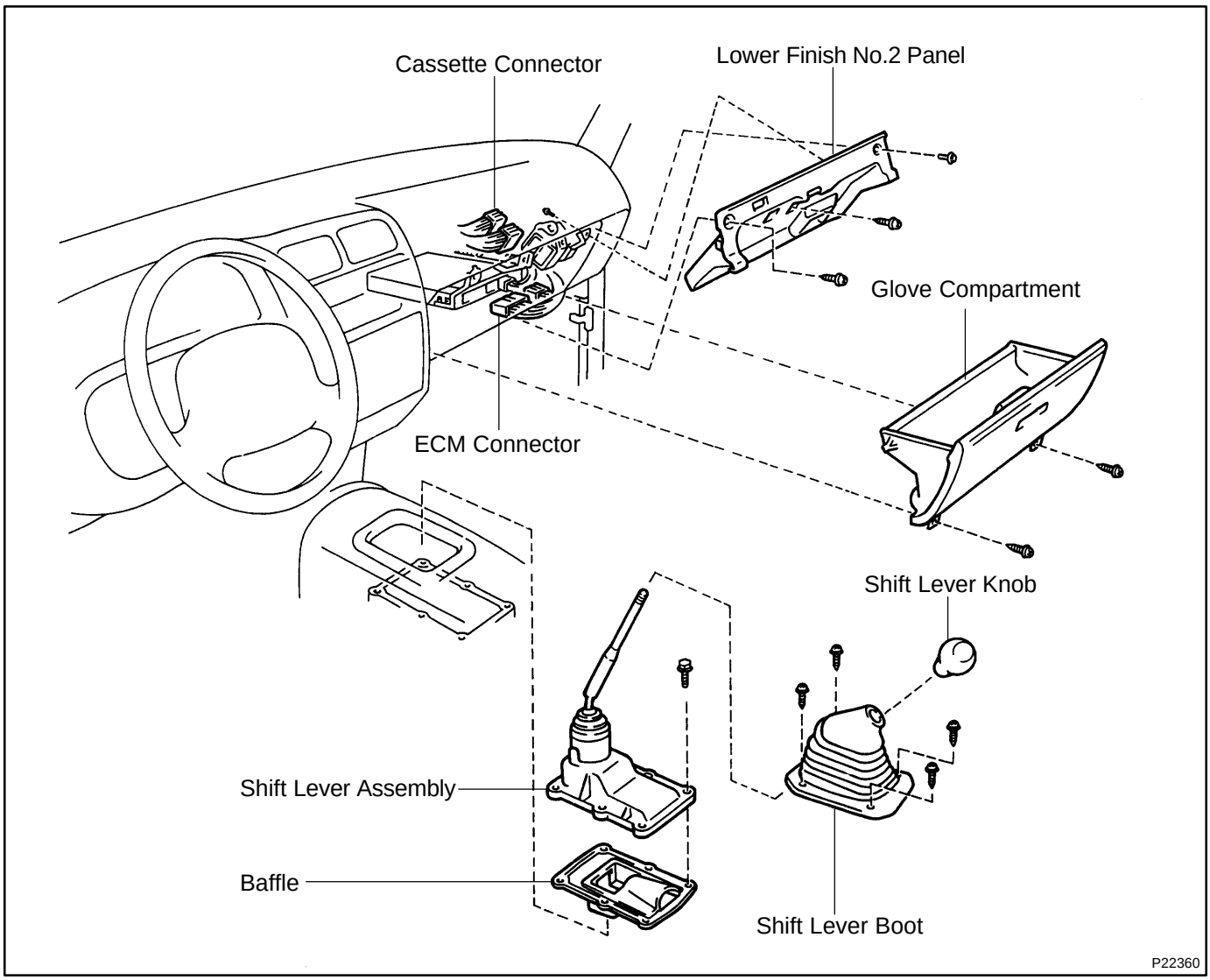
Cassette Connector
Lower Finish No.2 Panel
Glove Compartment
ECM Connector
Shift Lever Knob
Shift Lever Assembly
Baffle
Shift Lever Boot
P22360

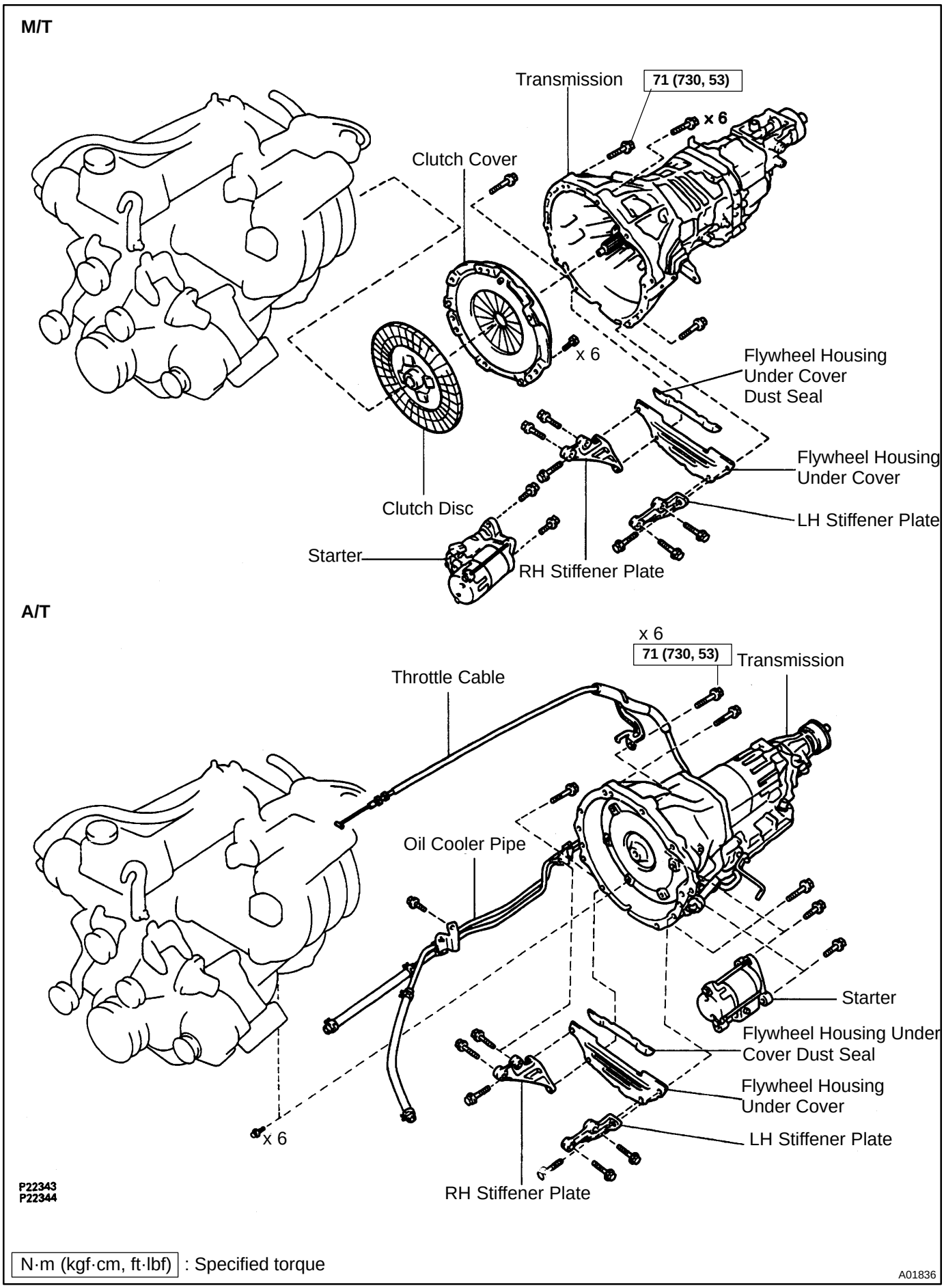
M/T
Transmission
71 (730, 53)
x 6
Clutch Cover
x 6
Flywheel Housing Under Cover Dust Seal
Flywheel Housing Under Cover
Clutch Disc
LH Stiffener Plate
Starter
RH Stiffener Plate
A/T
x 6
71 (730, 53)
Transmission
Throttle Cable
Oil Cooler Pipe
Starter
Flywheel Housing Under Cover Dust Seal
Flywheel Housing Under Cover
LH Stiffener Plate
x 6
RH Stiffener Plate
P22343
P22344
N·m (kgf·cm, ft·lbf) : Specified torque
A01836

EM16W–02

INSTALLATION

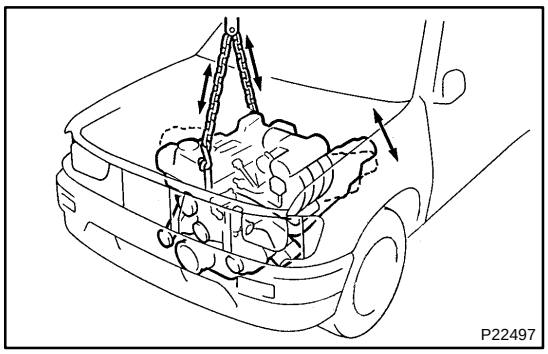
P22497

1. INSTALL TRANSMISSION TO ENGINE

2. INSTALL ENGINE AND TRANSMISSION ASSEMBLY IN VEHICLE

(a) Attach the engine hoist chain to the engine hangers.

(b) Lower the engine and transmission assembly into the engine compartment.

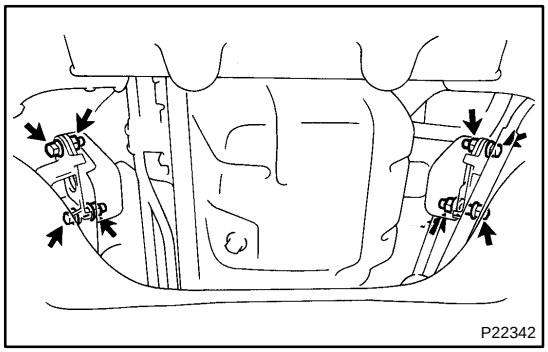
P22342

(c) Keep the engine level, and align the RH and LH mountings and body mountings.

(d) Attach the RH and LH mounting insulators to the body mountings, and temporarily install the 4 bolts and nuts.

(e) Jack up and put the transmission onto the frame.

(f) Remove the hoist chain.

(g) Remove the bolt and rear engine hanger.

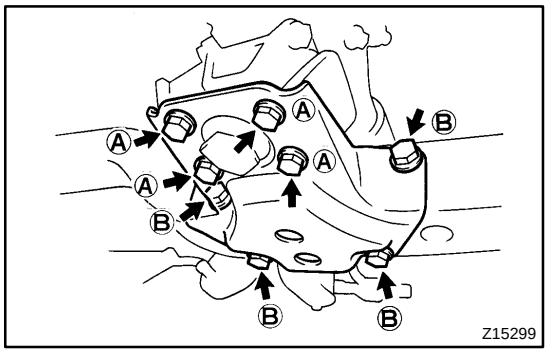

Z15299

3. INSTALL ENGINE REAR MOUNTING BRACKET

Torque:

Bolt A: 18 N·m (183 kgf·cm, 13 ft·lbf)

Bolt B: 25 N·m (260 kgf·cm, 19 ft·lbf)

4. TIGHTEN RH AND LH ENGINE MOUNTING INSULATOR BOLTS AND NUTS

Tighten the 4 bolts and nuts holding the mounting insulators to the body mountings.

Torque: 38 N·m (387 kgf·cm, 28 ft·lbf)

5. CONNECT STARTER WIRE

6. M/T:

INSTALL CLUTCH RELEASE CYLINDER

(a) Connect the clutch line with the bolt.

Torque: 39 N·m (400 kgf·cm, 29 ft·lbf)

(b) Install the clutch release cylinder with the 2 bolts.

Torque: 13 N·m (130 kgf·cm, 9 ft·lbf)

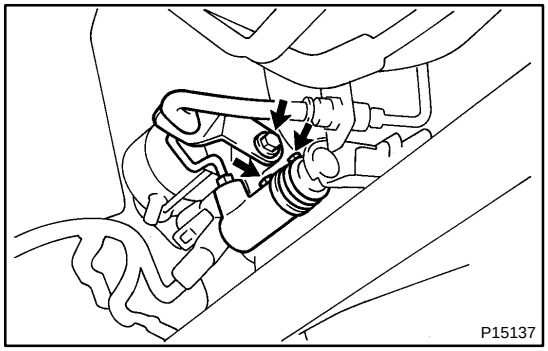
P15137

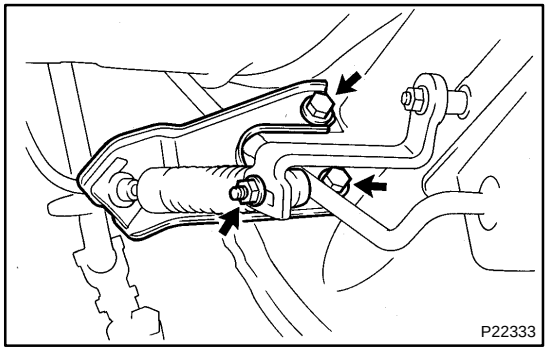
P22333

7. A/T:

INSTALL CROSS SHAFT

Torque:

Bolt: 39 N·m (400 kgf·cm, 29 ft·lbf)

Nut: 18 N·m (183 kgf·cm, 13 ft·lbf)

8. CONNECT SPEEDOMETER CABLE

9. INSTALL PROPELLER SHAFT (See page PR–8)

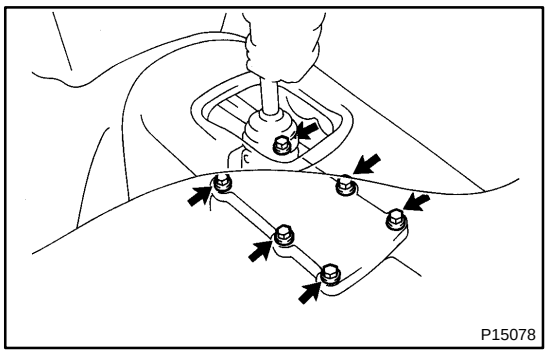

10. M/T:
INSTALL SHIFT LEVER ASSEMBLY

11. INSTALL No.1 EXHAUST PIPE (WITH TWC)

(a) Install a new gasket (2RZ–FE) or 2 new gaskets (3RZ–FE) and the No.1 exhaust pipe with new 3 nuts.
Torque: 62 N·m (630 kgf·cm, 46 ft·lbf)

(b) Install the support bracket with the 2 bolts.
Torque: 44 N·m (450 kgf·cm, 33 ft·lbf)

(c) Install a new gasket and connect the No.1 exhaust pipe to the No.2 exhaust pipe with the 2 bolts and 2 nuts.
Torque: 48 N·m (490 kgf·cm, 35 ft·lbf)

(d) Connect the A/F sensor connector.

12. CONNECT ENGINE WIRE TO CABIN

13. CONNECT GENERATOR WIRE

14. w/ PS:
INSTALL PS PUMP (See page EM–57)

15. CONNECT HOSES

(a) Connect the fuel return hose.

(b) Connect the fuel inlet hose.

(c) Connect the brake booster vacuum hose.

(d) Connect the EVAP hose.

(e) w/ PS:
Connect the 2 air hoses for PS idle–up.

16. CONNECT HEATER HOSES

17. INSTALL A/C COMPRESSOR
Torque: 25 N·m (250 kgf·cm, 18 ft·lbf)

18. INSTALL INTAKE AIR CONNECTOR
Torque: 18 N·m (185 kgf·cm, 13 ft·lbf)

19. INSTALL AIR CLEANER ASSEMBLY

20. CONNECT CABLES:

(a) Connect the throttle cable to the throttle body.

(b) w/ Cruise Control System:
Connect the cruise control cable to the actuator, and install the actuator cover.

21. INSTALL RADIATOR (See page CO–21)

22. FILL WITH ENGINE OIL

23. FILL WITH ENGINE COOLANT

24. FILL TRANSMISSION OIL

25. START ENGINE AND CHECK FOR LEAKS

26. INSTALL ENGINE UNDER COVER

27. INSTALL HOOD

28. VEHICLE ROAD TEST

Check for abnormal noise, shock, slippage, and smooth operation.

29. RECHECK ENGINE COOLANT AND ENGINE OIL LEVELS

EM16V–03

REMOVAL

1. REMOVE ENGINE UNDER COVER

2. DRAIN ENGINE COOLANT

3. DRAIN ENGINE OIL

4. DRAIN TRANSMISSION OIL

5. REMOVE HOOD

6. REMOVE RADIATOR (See page CO–18)

7. REMOVE DRIVE BELT FOR GENERATOR, FAN WITH FLUID COUPLING AND WATER PUMP PULLEY (See page CO–5)

8. DISCONNECT CABLES:

(a) Disconnect the accelerator cable from the throttle body.

(b) w/ Cruise Control System:
Remove the actuator cover, and disconnect the cruise control cable from the actuator.

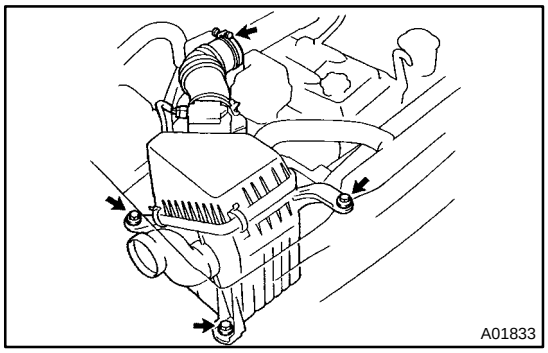

9. REMOVE AIR CLEANER ASSEMBLY

(a) Disconnect the MAF meter connector.

(b) Disconnect the 3 wire clamps and engine wire.

(c) Loosen the air cleaner hose clamp.

(d) Remove the 3 bolts and the MAF meter, resonator and air cleaner assembly.

10. REMOVE INTAKE AIR CONNECTOR (See page EM–34)

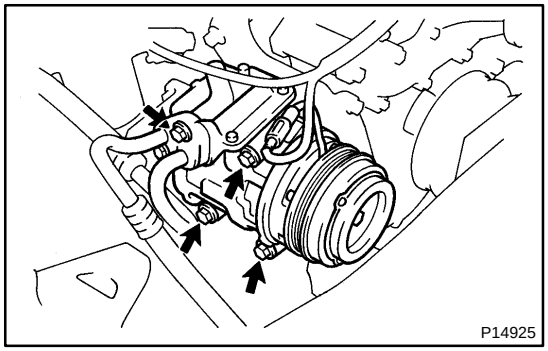

11. DISCONNECT A/C COMPRESSOR

(a) Loosen the idler pulley nut and adjusting bolt, and remove the drive belt.

(b) Disconnect the A/C compressor connector.

(c) Remove the 4 bolts, and disconnect the compressor from the bracket.

HINT:

Put a side the compressor, and suspend it.

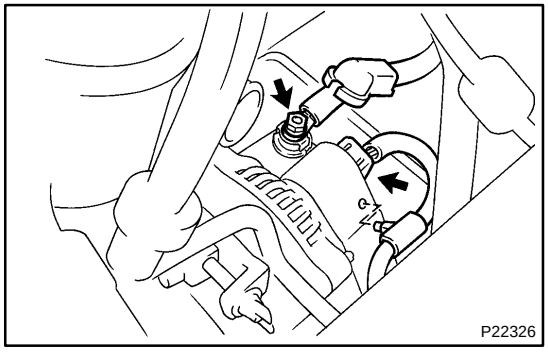

12. REMOVE GENERATOR WIRE

(a) Disconnect the generator connector.

(b) Remove the nut, and disconnect the generator wire and wire clip.

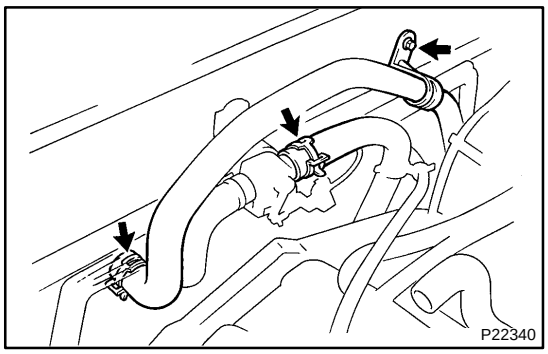

13. DISCONNECT HEATER HOSES

(a) Remove the bolt and hose clamp.

(b) Disconnect the heater hoses.

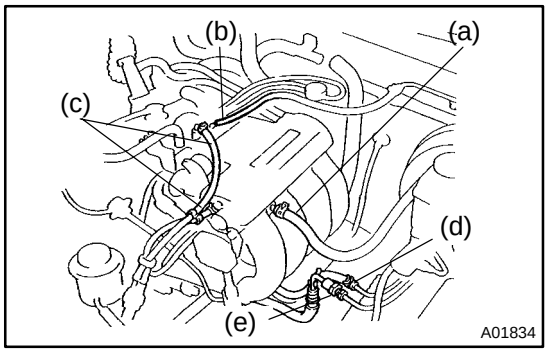

14. DISCONNECT HOSES

(a) Disconnect the brake booster vacuum hose.

(b) Disconnect the EVAP hose.

(c) w/ PS:
Disconnect the 2 air hoses for PS idle–up.

(d) Disconnect the fuel return hose.

(e) Disconnect the fuel inlet hose.

15. w/ PS:
REMOVE PS PUMP FROM ENGINE (See page EM–34)

16. DISCONNECT ENGINE WIRE FROM CABIN

(a) Remove the glove compartment.

(b) Remove the lower finish No.2 panel.

(c) Disconnect the 4 ECM connectors.

(d) Disconnect the 2 cassette connectors (cowl wire to engine wire) and 2 wire clamps from the lower finish panel.

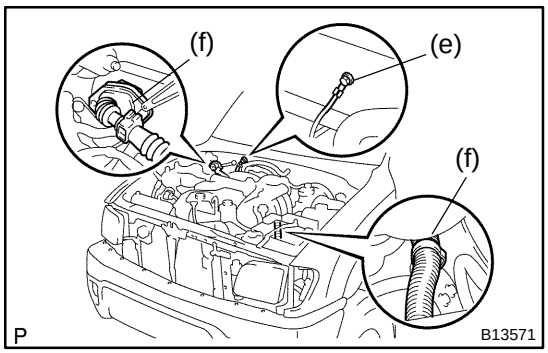

(e) Disconnect the ground strap from cowl top panel.

(f) Disconnect the 2 engine wire clamps.

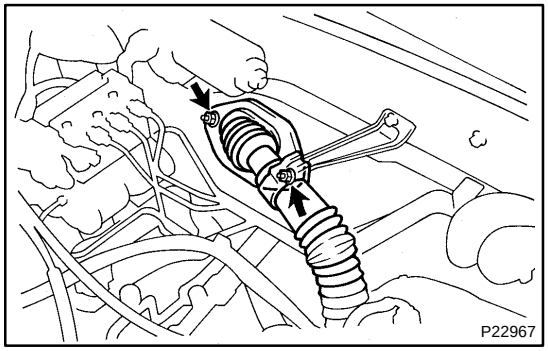

(g) Remove 2 nuts holding the engine wire retainer to the cowl panel and pull out the engine wire from the cabin.

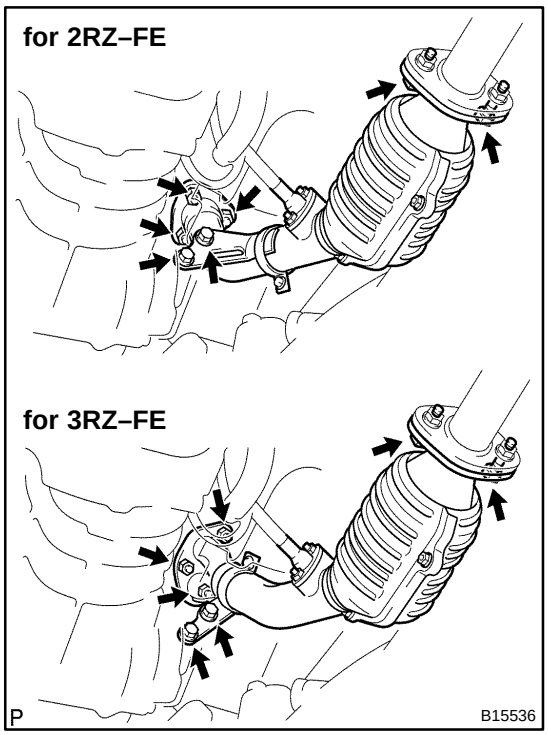

17. REMOVE No.1 EXHAUST PIPE (WITH TWC)

(a) Disconnect the A/F sensor connector.

(b) Remove the 2 bolts holding the support bracket to the transmission.

(c) Remove the 2 bolts holding the No.1 exhaust pipe to the No.2 exhaust pipe.

(d) Remove the 3 nuts, the No.1 exhaust pipe and 2 gaskets (2RZ–FE) or 3 gaskets (3RZ–FE).

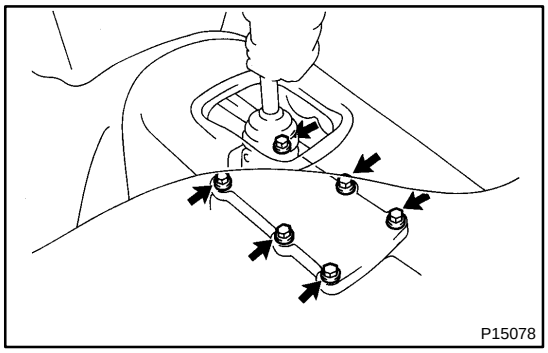

18. M/T:
REMOVE SHIFT LEVER ASSEMBLY

(a) Remove the shift lever knob.

(b) Remove the 4 screws and shift lever boot.

(c) Remove the 6 bolts, shift lever assembly and baffle.

NOTICE:

Do not lose the washers.

19. REMOVE PROPELLER SHAFT (See page PR–3)

20. DISCONNECT SPEEDOMETER CABLE

NOTICE:

Do not lose the felt protector and washers.

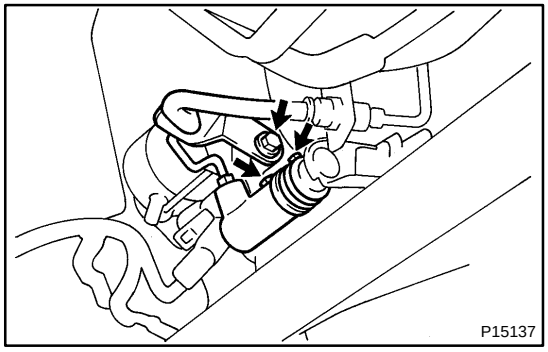

21. M/T:
REMOVE CLUTCH RELEASE CYLINDER

(a) Remove the 2 bolts, and disconnect the clutch release cylinder from the clutch housing.

(b) Remove the bolt and disconnect the clutch line.

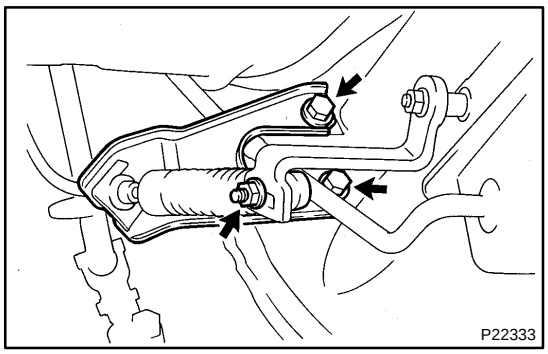

22. A/T:
REMOVE CROSS SHAFT

Remove the 2 bolts and nut, and disconnect bracket from the transmission.

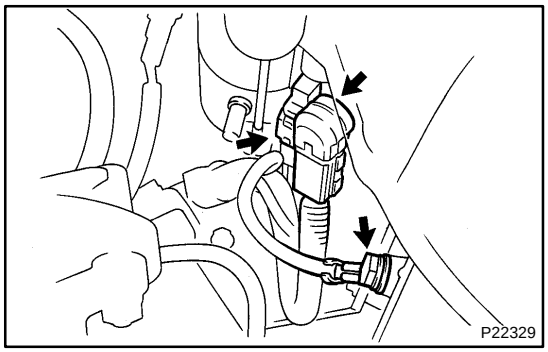

23. DISCONNECT STARTER WIRE

(a) Remove the nut and disconnect the starter wire.
(b) Disconnect the starter connector.
(c) Remove the bolt and disconnect ground strap.

24. PLACE JACK UNDER TRANSMISSION

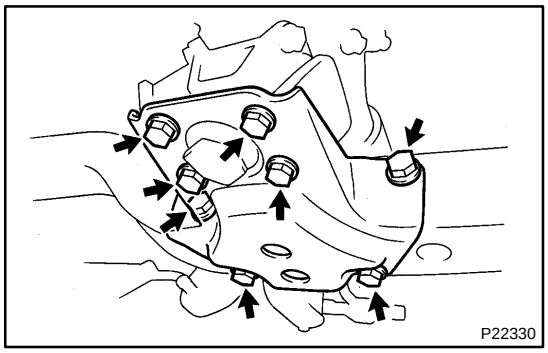

25. REMOVE ENGINE REAR MOUNTING BRACKET

Remove the 8 bolts holding the mounting bracket to the mounting insulator and cross member.

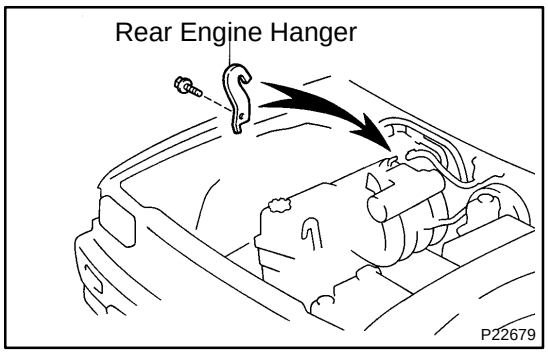

26. REMOVE ENGINE WITH TRANSMISSION

(a) Install a rear engine hanger in the correct direction.
Part No.:
No.2 engine hanger 12282–75020
Bolt 91512–61020
Torque: 42 N·m (420 kgf·cm, 30 ft·lbf)

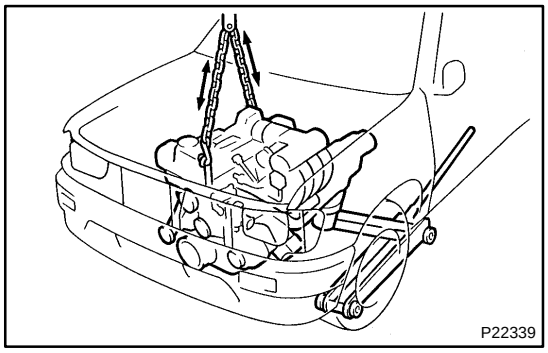

(b) Attach the engine hoist chain to the 2 engine hangers.

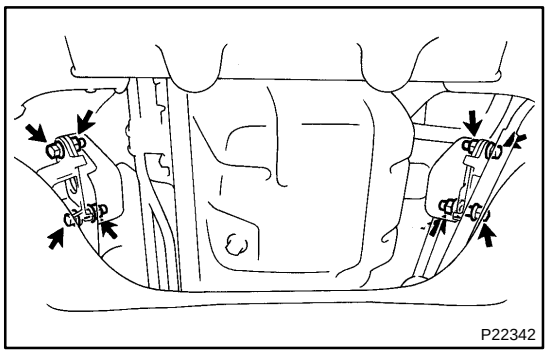

(c) Remove the 4 bolts and nuts holding the engine front mounting insulators to the frame.

(d) Lift the engine with transmission out of the vehicle slowly and carefully.

NOTICE:

Make sure the engine is clear of all wiring and hoses.

(e) Place the engine and transmission assembly onto the stand.

27. SEPARATE ENGINE AND TRANSMISSION

ENGINE UNIT (4WD)

COMPONENTS

EM030–06

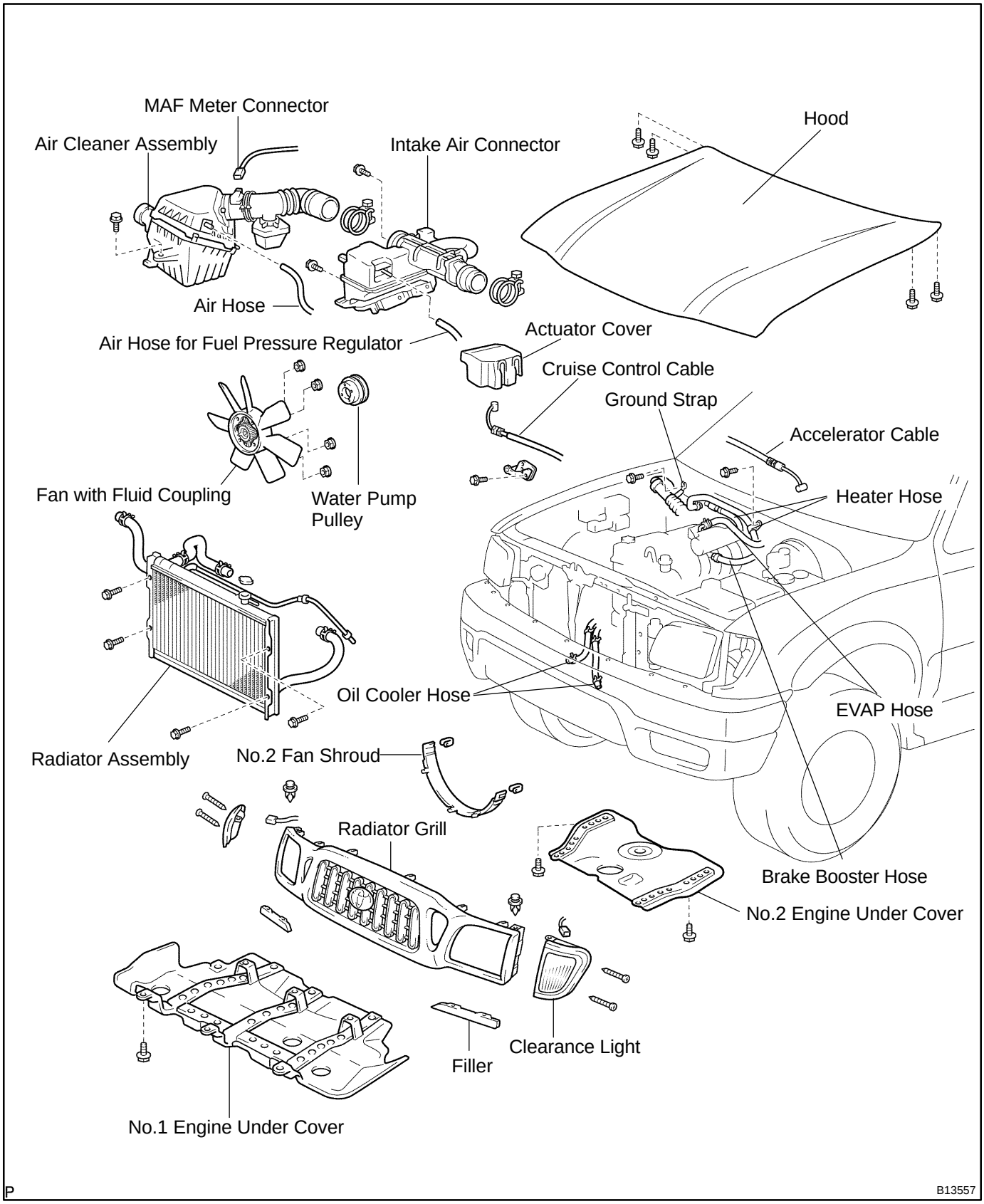

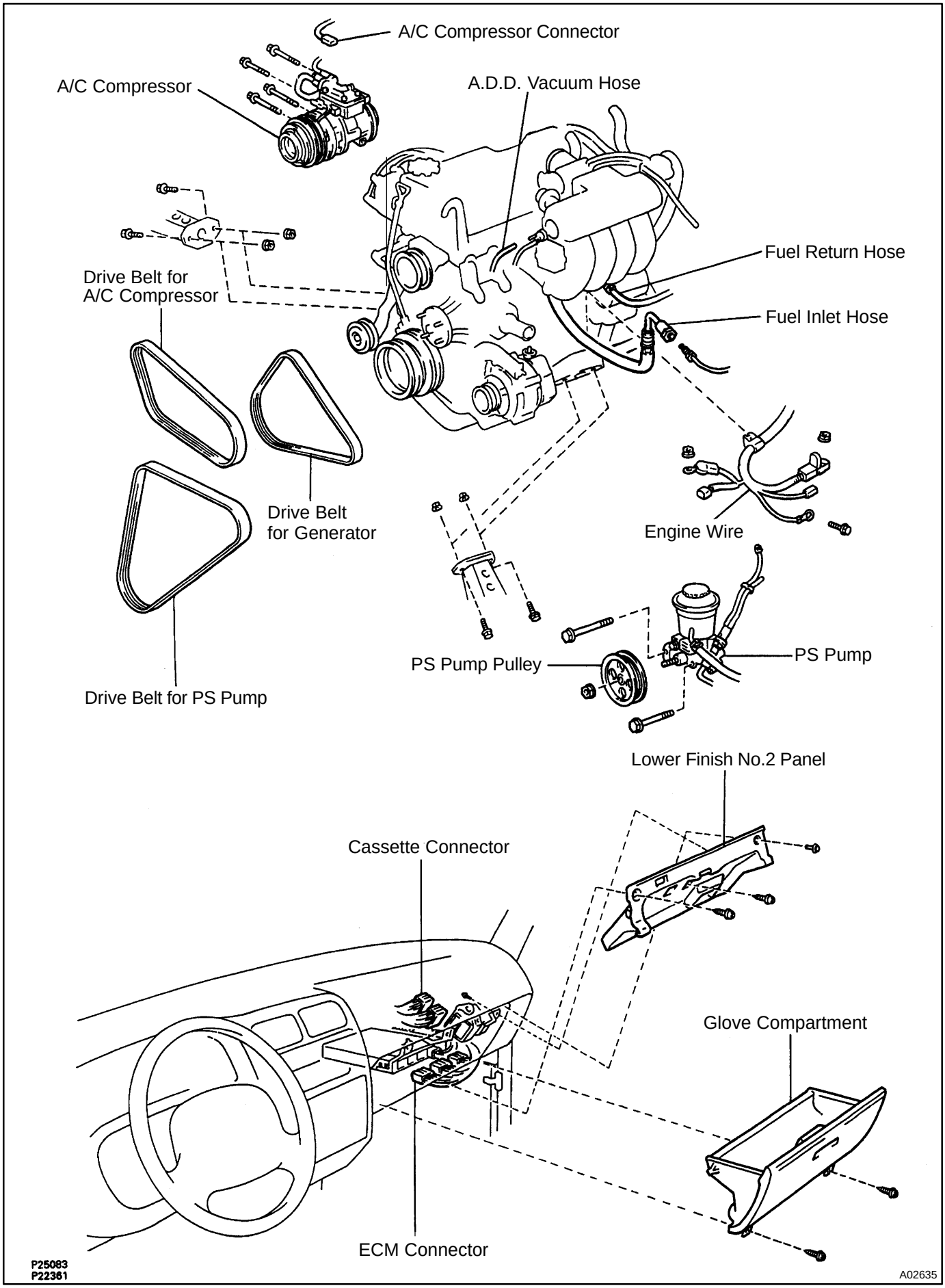
A/C Compressor Connector
A/C Compressor
A.D.D. Vacuum Hose
Fuel Return Hose
Drive Belt for
A/C Compressor
Fuel Inlet Hose
Drive Belt
for Generator
Engine Wire
PS Pump Pulley
PS Pump
Drive Belt for PS Pump
Lower Finish No.2 Panel
Cassette Connector
Glove Compartment
ECM Connector
P25083
P22361
A02635

EM032–04

INSTALLATION

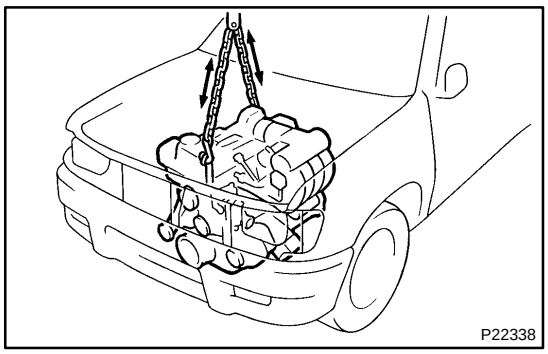

1. INSTALL ENGINE IN VEHICLE

(a) Attach the engine hoist chain to the engine hangers.

(b) Lower the engine into the engine compartment.

(c) Keep the engine level, and align the RH and LH mountings and body mountings.

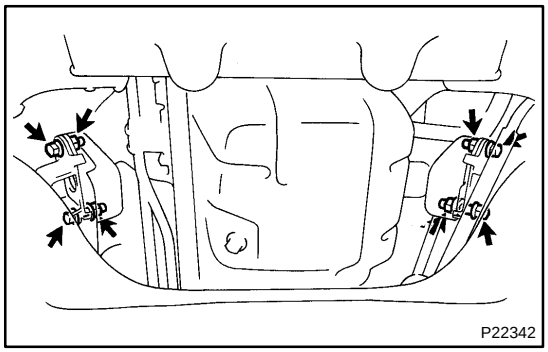

(d) Attach the RH and LH mounting insulators to the body mountings, and temporarily install the 4 bolts and nuts.

(e) Remove the hoist chain.

(f) Remove the bolt and rear engine hanger.

2. TIGHTEN RH AND LH ENGINE MOUNTING INSULATOR BOLTS AND NUTS

Tighten the 4 bolts and nuts holding the mounting insulators to the body mountings.

Torque: 38 N·m (387 kgf·cm, 28 ft·lbf)

3. CONNECT ENGINE WIRE TO CABIN

4. CONNECT GENERATOR WIRE

5. w/ PS:

CONNECT PS PUMP (See page EM–57)

6. CONNECT HOSES

(a) Connect the fuel return hose.

(b) Connect the fuel inlet hose.

(c) w/ A.D.D.:

Connect the vacuum hose.

(d) Connect the brake booster vacuum hose.

(e) Connect the EVAP hose.

(f) Connect the 2 air hoses for PS idle–up.

7. CONNECT HEATER HOSES

8. INSTALL A/C COMPRESSOR

Torque: 25 N·m (250 kgf·cm, 18 ft·lbf)

9. INSTALL INTAKE AIR CONNECTOR

Torque: 18 N·m (185 kgf·cm, 13 ft·lbf)

10. INSTALL AIR CLEANER ASSEMBLY

11. CONNECT CABLES:

(a) Connect the throttle cable to the throttle body.

(b) w/ Cruise Control System:

Connect the cruise control cable to the actuator, and install the actuator cover.

12. INSTALL RADIATOR (See page CO–21)

13. FILL WITH ENGINE OIL

14. FILL WITH ENGINE COOLANT

15. INSTALL TRANSMISSION

EM16X–02

REMOVAL

1. REMOVE TRANSMISSION
2. REMOVE ENGINE UNDER COVER
3. DRAIN ENGINE COOLANT
4. DRAIN ENGINE OIL
5. REMOVE HOOD
6. REMOVE RADIATOR (See page CO–18)
7. REMOVE DRIVE BELT FOR GENERATOR, FAN WITH FLUID COUPLING AND WATER PUMP PULLEY (See page CO–5)
8. DISCONNECT CABLES
(a) Disconnect the accelerator cable from the throttle body.
(b) w/ Cruise Control System:
Remove the actuator cover, and disconnect the cruise control cable from the actuator.

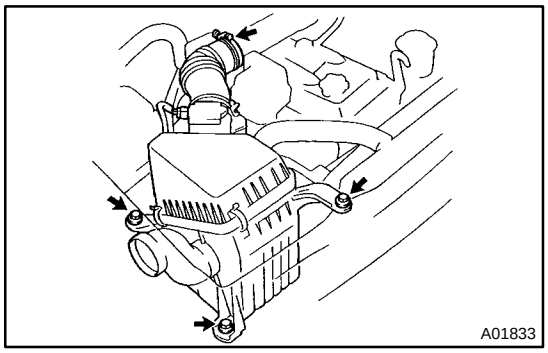
A01833

9. REMOVE AIR CLEANER ASSEMBLY
(a) Disconnect the MAF meter connectors.
(b) Disconnect the 3 wire clamps and engine wire.
(c) California Spec.:
Disconnect the air hose from the air cleaner cap.
(d) Loosen the air cleaner hose clamp.
(e) Remove the 3 bolts and the MAF meter, resonator and air cleaner assembly.
10. REMOVE INTAKE AIR CONNECTOR (See page EM–34)

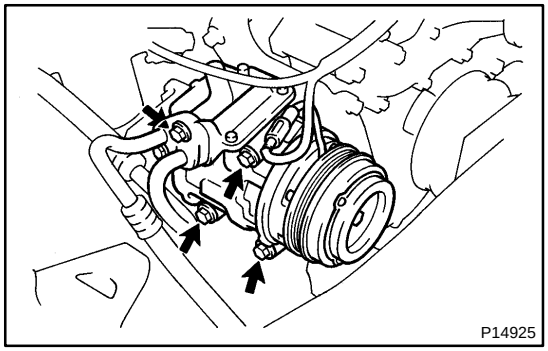
P14925

11. DISCONNECT A/C COMPRESSOR
(a) Loosen the idler pulley nut and adjusting bolt, and remove the drive belt.
(b) Disconnect the A/C compressor connector.
(c) Remove the 4 bolts, and disconnect the compressor from the bracket.
HINT:
Put aside the compressor, and suspend it.

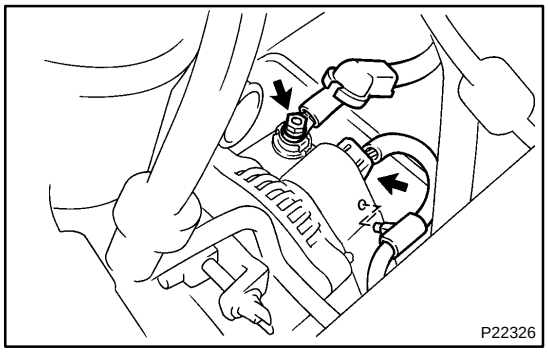
P22326

12. REMOVE GENERATOR WIRE
(a) Disconnect the generator connector.
(b) Remove the nut, and disconnect the generator wire and wire clip.

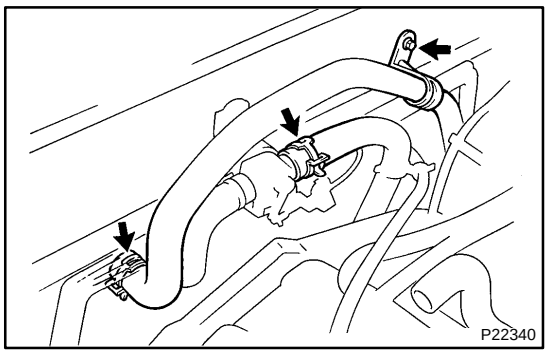

13. DISCONNECT HEATER HOSES

(a) Remove the bolt and hose clamp.

(b) Disconnect the heater hoses.

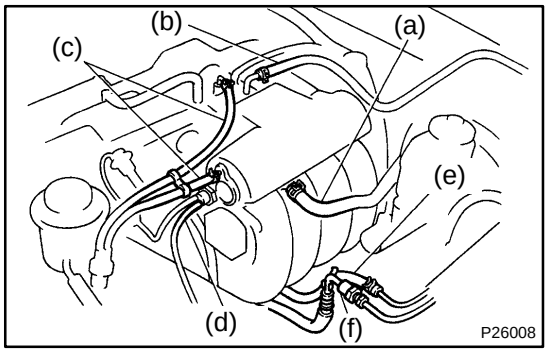

14. DISCONNECT HOSES

(a) Disconnect the brake booster vacuum hose.

(b) Disconnect the EVAP hose.

(c) Disconnect the 2 air hoses for PS idle–up.

(d) w/ A.D.D.:
Disconnect the vacuum hose.

(e) Disconnect the fuel return hose.

(f) Disconnect the fuel inlet hose.

15. DISCONNECT PS PUMP FROM ENGINE
(See page EM–34)

16. DISCONNECT ENGINE WIRE FROM CABIN

(a) Remove the glove compartment door.

(b) Remove the lower finish No.2 panel.

(c) Disconnect the 4 ECM connectors.

(d) Disconnect the 2 cassette connectors (cowl wire to engine wire) and 2 wire clamps from the lower finish panel.

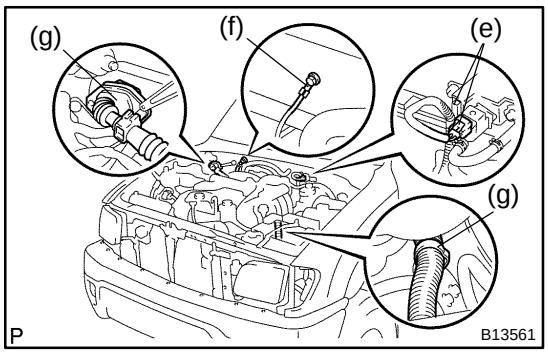

(e) Disconnect the VSV connector for EVAP and clamp.

(f) Disconnect the ground strap from cowl top panel.

(g) Disconnect the 2 engine wire clamps.

(h) Disconnect the vapor pressure sensor connector.

(i) Disconnect the VSV connector for vapor pressure sensor.

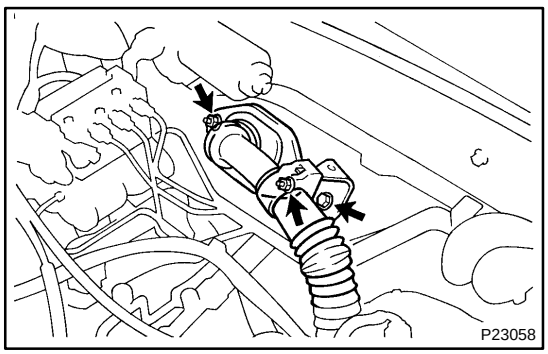

(j) Remove the bolt and wire bracket.

(k) Remove 2 nuts holding the engine wire retainer to the cowl panel, and pull out the engine wire from the cabin.

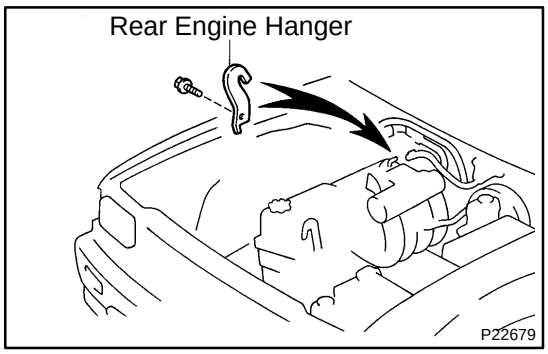

17. REMOVE ENGINE FROM VEHICLE

(a) Install a rear engine hanger in the correct direction.
Part No.:
No.2 engine hanger 12282–75020
Bolt 91512–61020
Torque: 42 N·m (420 kgf·cm, 30 ft·lbf)

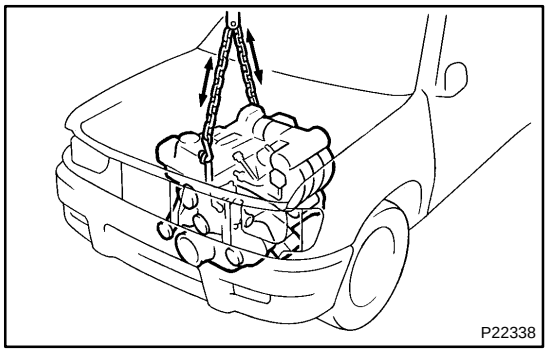

(b) Attach the engine hoist chain to the 2 engine hangers.

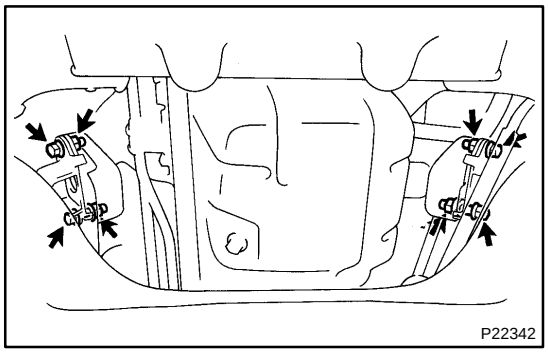

(c) Remove the 4 bolts and nuts holding the engine front mounting insulators to the frame.

(d) Lift the engine out of the vehicle slowly and carefully.

NOTICE:

Make sure the engine is clear of all wiring and hoses.

(e) Place the engine onto the stand.

EXHAUST SYSTEM

EM1N1–02

COMPONENTS

for 2RZ–FE

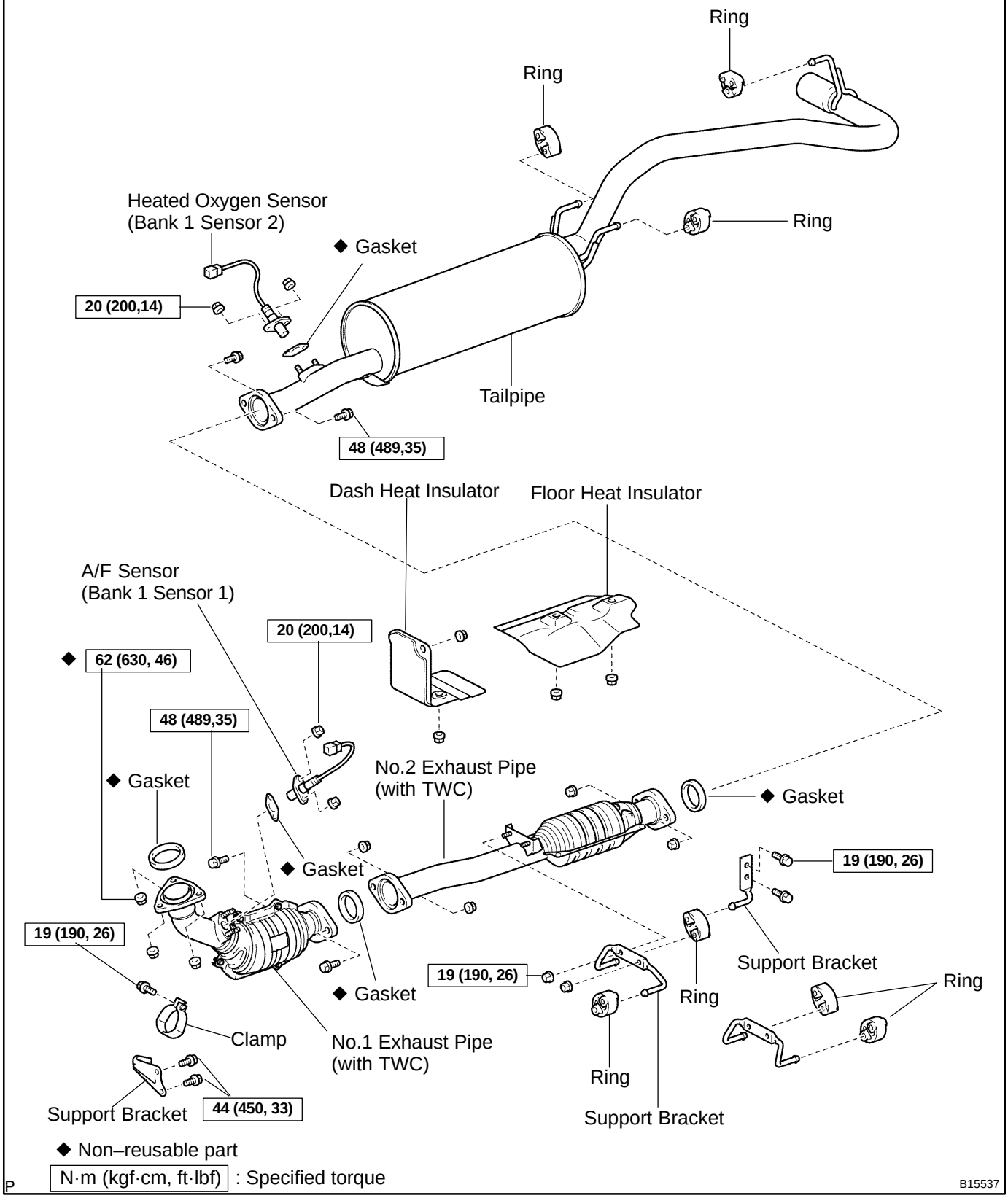

for 3RZ–FE

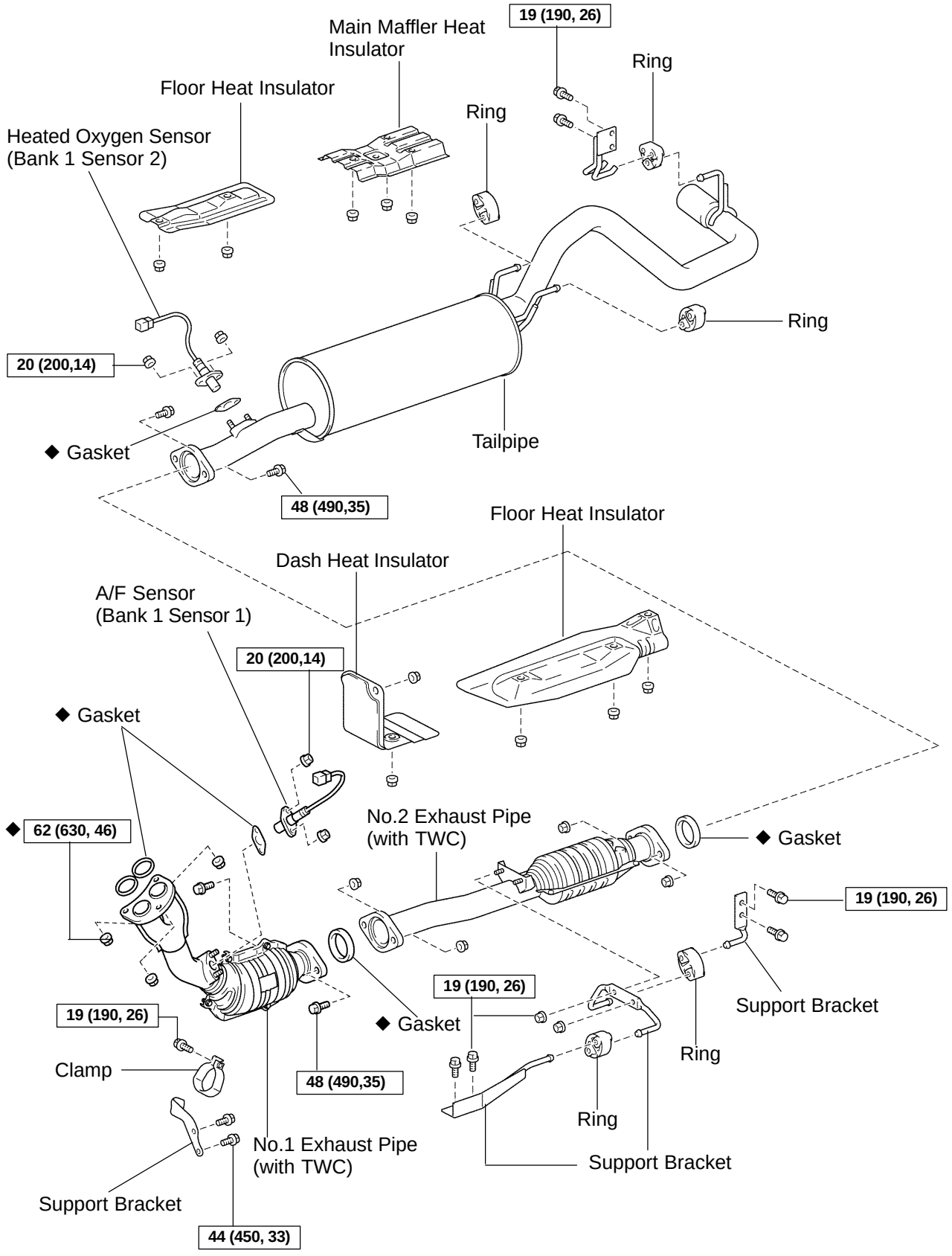

◆ Non–reusable part

N·m (kgf·cm, ft·lbf) : Specified torque

A17831

IDLE SPEED

EM1U5–01

INSPECTION

1. INITIAL CONDITIONS

(a) Engine at normal operating temperature.
(b) Air cleaner installed.
(c) All pipes and hoses of air induction system connected.
(d) All accessories switched OFF.
(e) All vacuum lines properly connected.
(f) SFI system wiring connectors fully plugged.
(g) Ignition timing checked correctly.
(h) Transmission in neutral position.

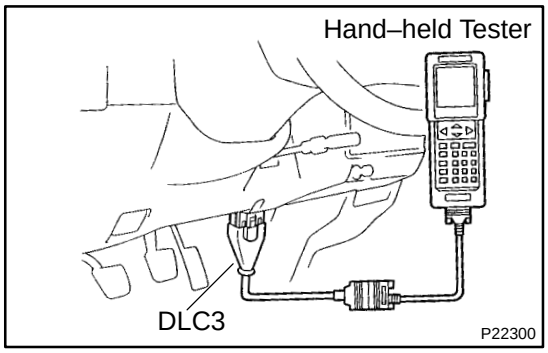

2. CONNECT HAND–HELD TESTER OR OBD II SCAN TOOL

(a) Connect the hand–held tester or OBD II scan tool to the DLC3.
(b) Please refer to the hand–held tester or OBD II scan tool operator's manual for further details.

3. INSPECT IDLE SPEED

(a) Race the engine speed at 2,500 rpm for approx. 90 seconds.
(b) Check the idle speed.

Idle speed: 700 ± 50 rpm

If the idle speed is not as specified, check the IAC valve, intake air leakage and SFI system.

4. DISCONNECT HAND–HELD TESTER OR OBD II SCAN TOOL

IGNITION TIMING

EM1U4–01

INSPECTION

1. WARM UP ENGINE

Allow the engine to warm up to normal operating temperature.

2. CHECK IDLE SPEED (See page EM–11)

3. CONNECT TIMING LIGHT TO ENGINE

Clamp the tester probe of a timing light to the 4 lead wires or black–red wire of the ignition coil connector for No.1 cylinder.

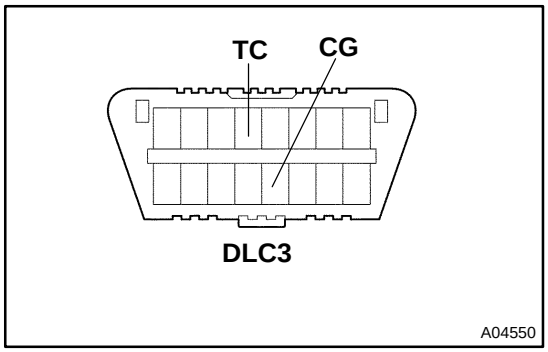

4. INSPECT IGNITION TIMING

(a) Using SST, connect terminals TC and CG of the DLC3.
SST 09843–18040

HINT:

After engine speed is kept at about 1,000 rpm for 5 seconds, check that it returns to idle speed.

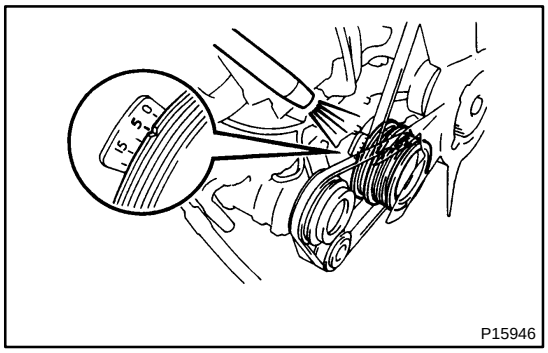

(b) Using a timing light, check the ignition timing.
Ignition timing: 3 – 7˚ BTDC @ idle
5 ± 2˚ BTC @ idle
(Transmission in neutral position)

(c) Remove the SST from the DLC3.

5. FURTHER CHECK IGNITION TIMING
Ignition timing: 4 – 17˚ BTDC @ idle
(Transmission in neutral position)

HINT:

The timing mark moves in a range between 4˚ and 17˚.

6. DISCONNECT TIMING LIGHT FROM ENGINE

TIMING CHAIN

COMPONENTS

EM1MW–02

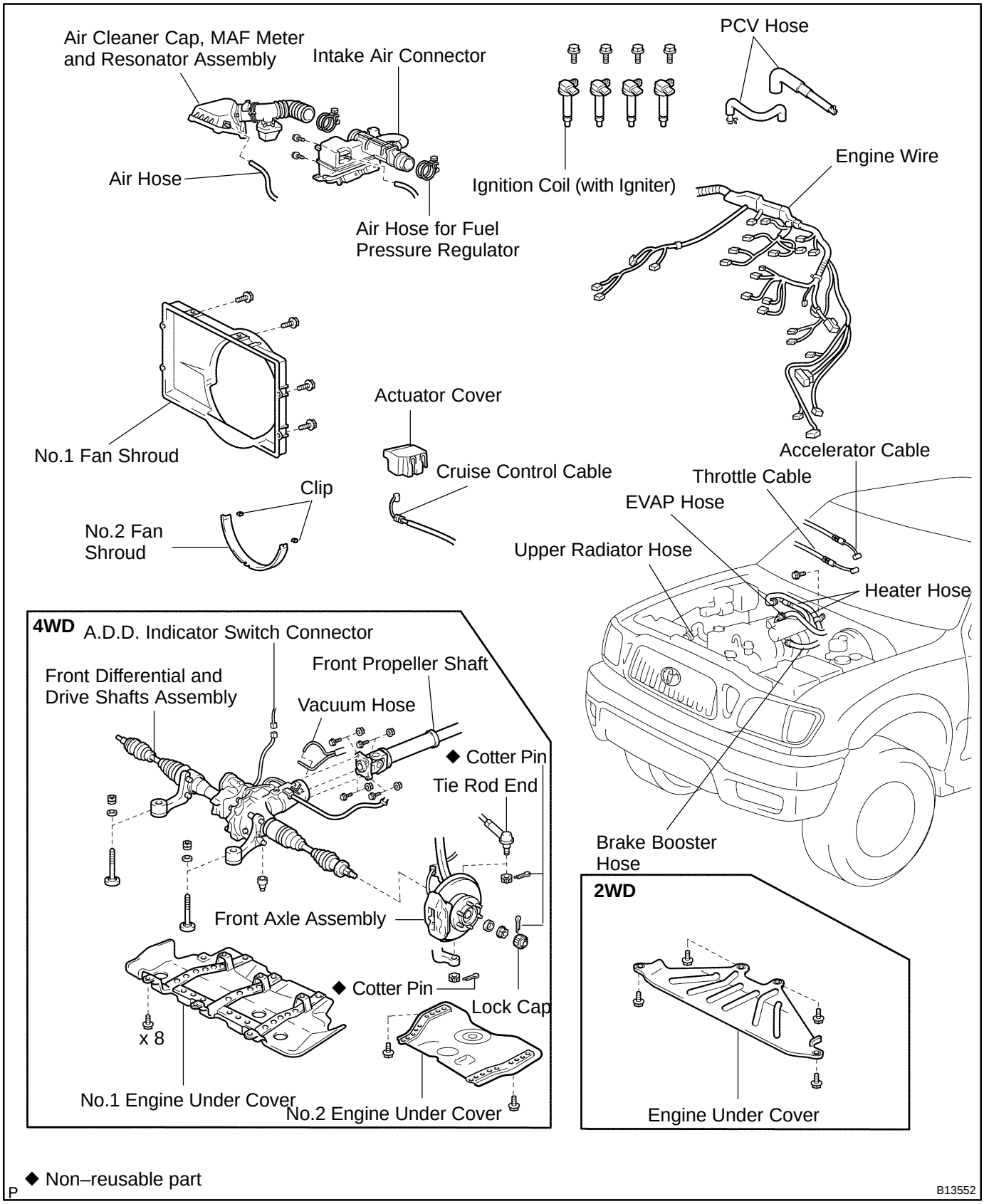

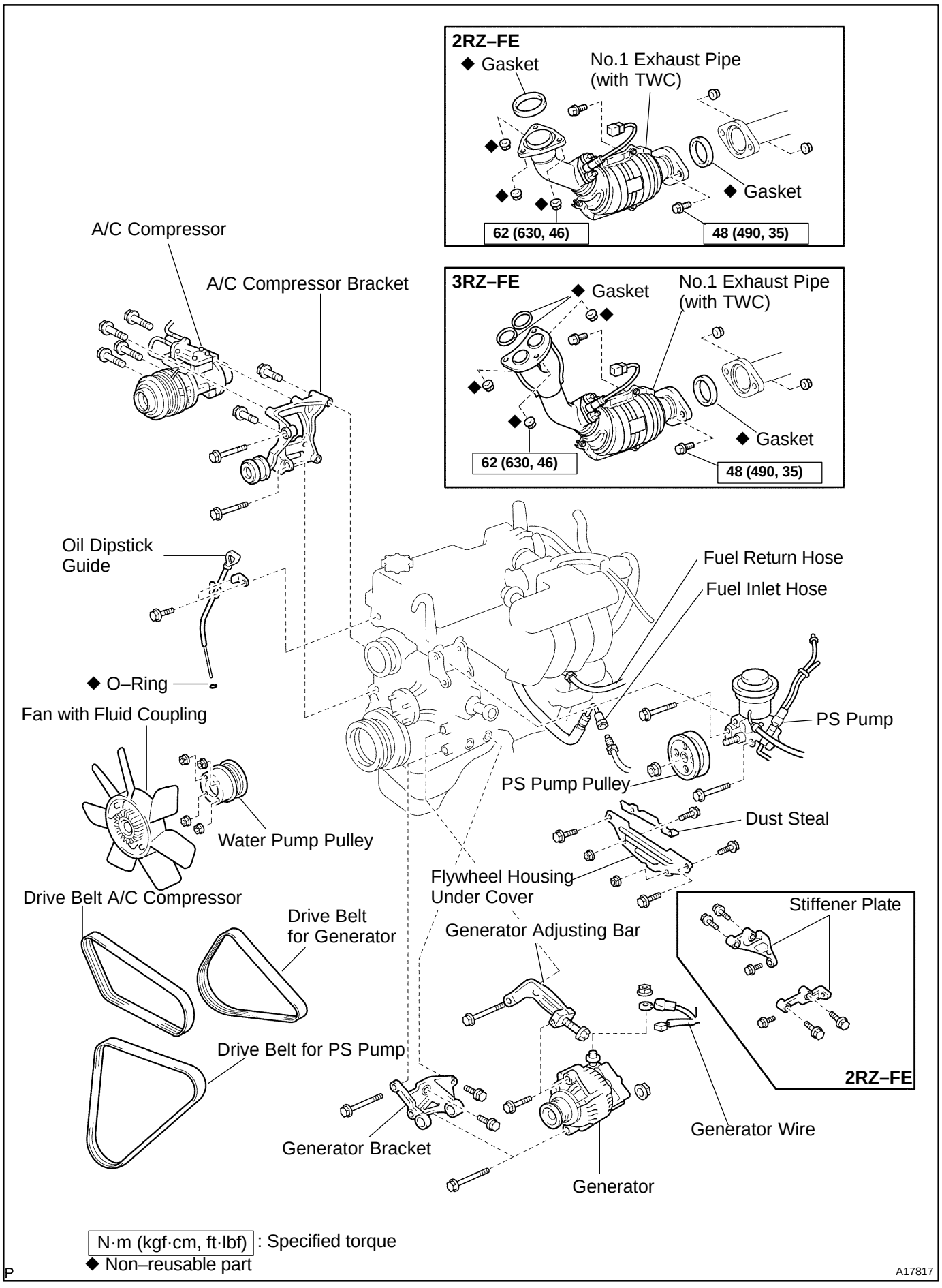
2RZ–FE
◆ Gasket
No.1 Exhaust Pipe (with TWC)
◆ Gasket
62 (630, 46)
48 (490, 35)
3RZ–FE
◆ Gasket
No.1 Exhaust Pipe (with TWC)
◆ Gasket
62 (630, 46)
48 (490, 35)
A/C Compressor
A/C Compressor Bracket
Oil Dipstick Guide
◆ O–Ring
Fuel Return Hose
Fuel Inlet Hose
PS Pump
PS Pump Pulley
Dust Steal
Fan with Fluid Coupling
Water Pump Pulley
Flywheel Housing Under Cover
Drive Belt A/C Compressor
Drive Belt for Generator
Drive Belt for PS Pump
Generator Adjusting Bar
Stiffener Plate
2RZ–FE
Generator Bracket
Generator
Generator Wire
N·m (kgf·cm, ft·lbf) : Specified torque
◆ Non–reusable part
P
A17817

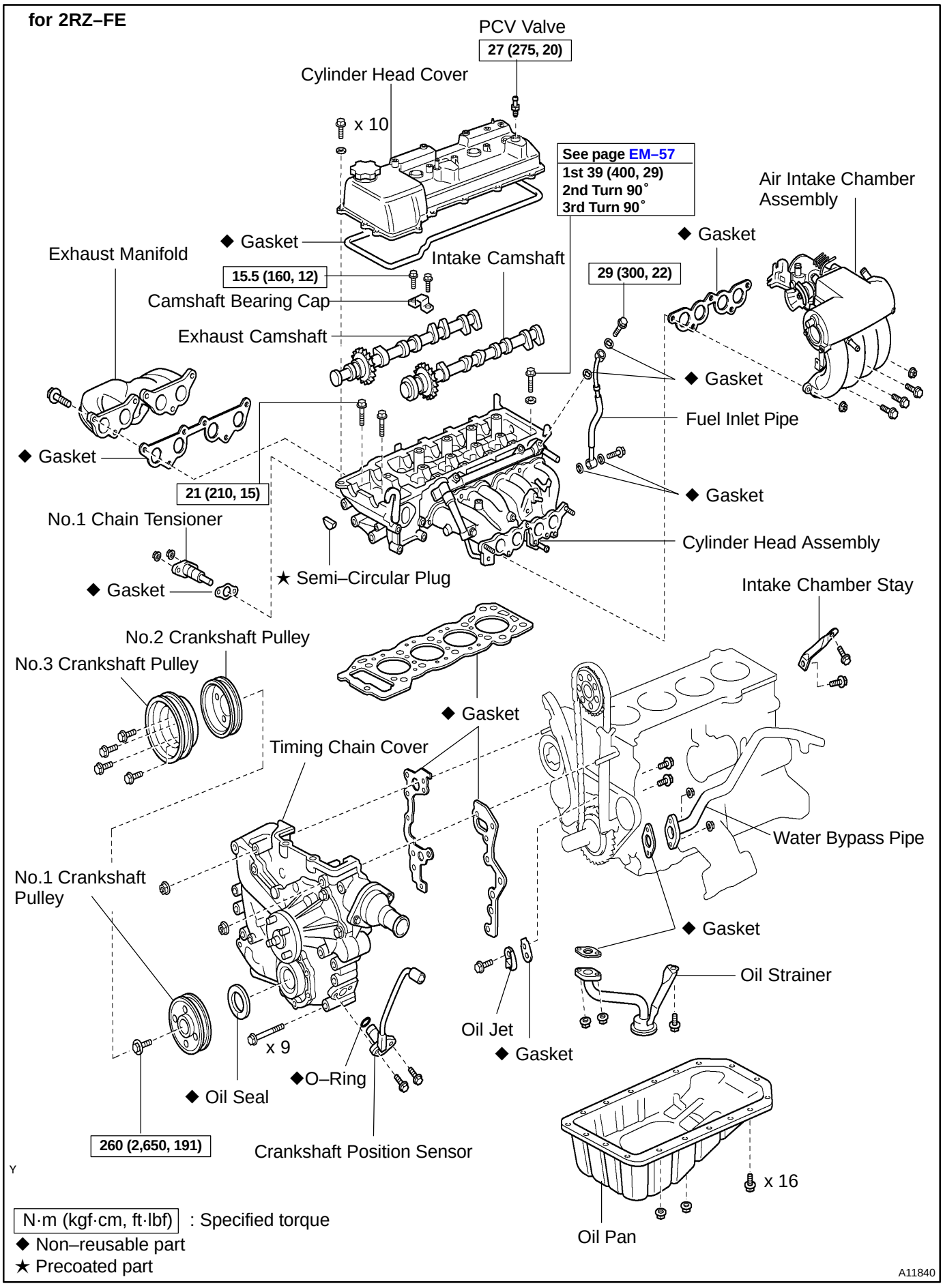
for 2RZ–FE
PCV Valve
27 (275, 20)
Cylinder Head Cover
x 10
See page EM–57
1st 39 (400, 29)
2nd Turn 90°
3rd Turn 90°
Air Intake Chamber Assembly
◆ Gasket
Exhaust Manifold
15.5 (160, 12)
Intake Camshaft
29 (300, 22)
Camshaft Bearing Cap
Exhaust Camshaft
◆ Gasket
Fuel Inlet Pipe
◆ Gasket
21 (210, 15)
No.1 Chain Tensioner
Cylinder Head Assembly
◆ Gasket
★ Semi–Circular Plug
Intake Chamber Stay
No.2 Crankshaft Pulley
No.3 Crankshaft Pulley
◆ Gasket
Timing Chain Cover
Water Bypass Pipe
No.1 Crankshaft Pulley
◆ Gasket
Oil Strainer
Oil Jet
◆ Gasket
x 9
◆O–Ring
◆ Oil Seal
260 (2,650, 191)
Crankshaft Position Sensor
x 16
Oil Pan
Y
N·m (kgf·cm, ft·lbf) : Specified torque
◆ Non–reusable part
★ Precoated part
A11840

for 3RZ–FE

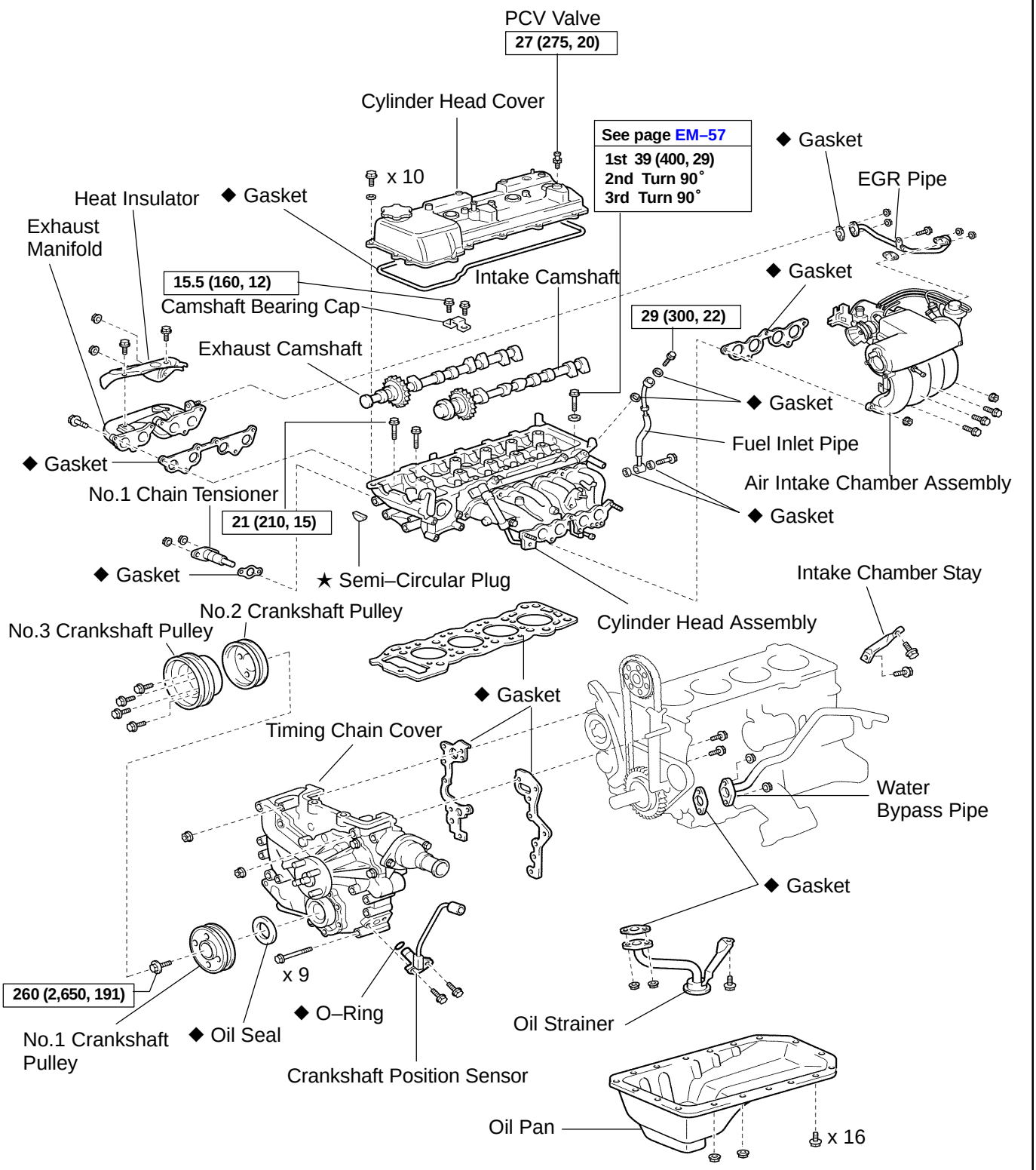

P N·m (kgf·cm,ft·lbf) : Specified torque
◆ Non–reusable part
★ Precoated part

B13553

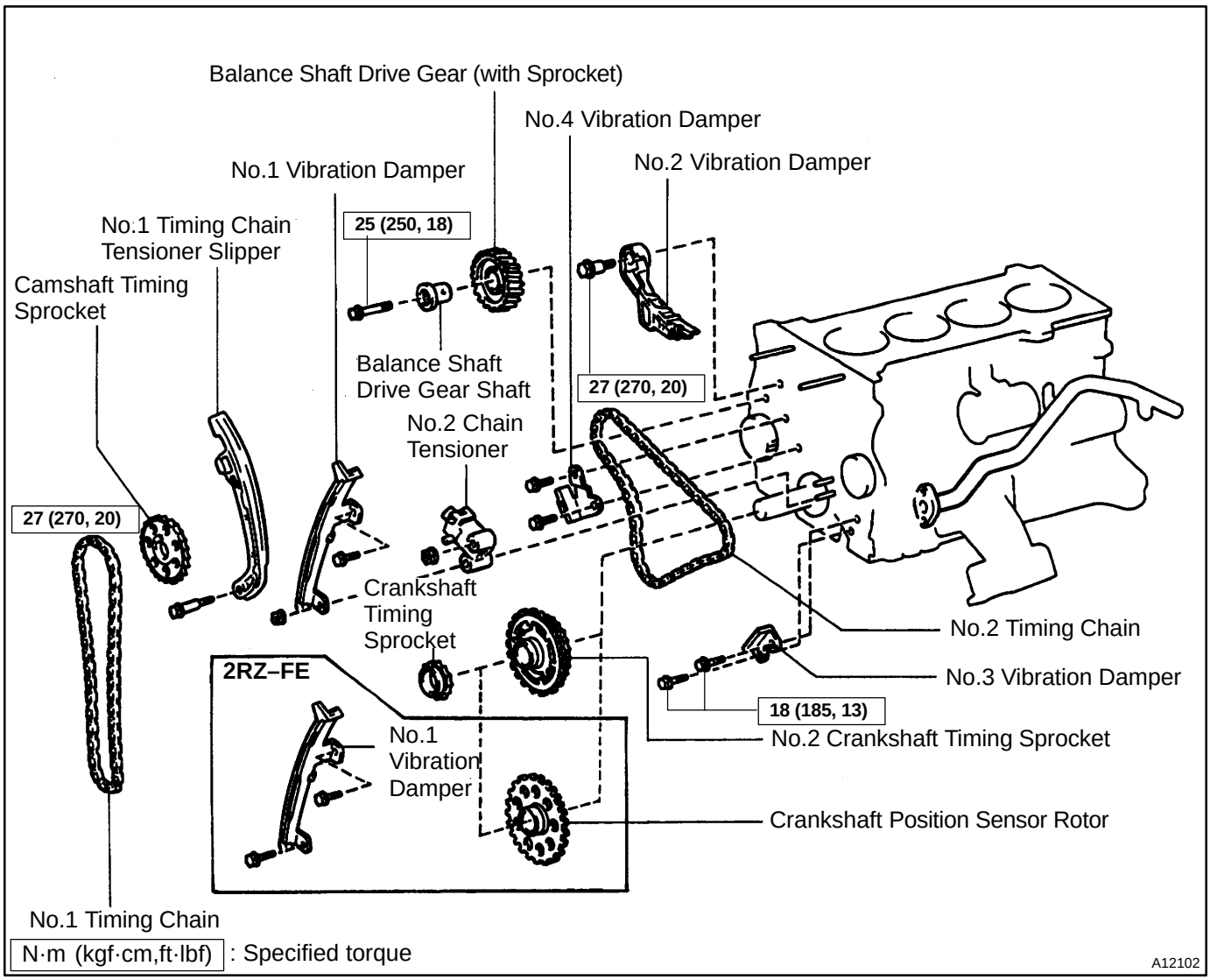
Balance Shaft Drive Gear (with Sprocket)
No.4 Vibration Damper
No.1 Vibration Damper
No.2 Vibration Damper
No.1 Timing Chain Tensioner Slipper
25 (250, 18)
Camshaft Timing Sprocket
Balance Shaft Drive Gear Shaft
27 (270, 20)
No.2 Chain Tensioner
27 (270, 20)
Crankshaft Timing Sprocket
No.2 Timing Chain
No.3 Vibration Damper
18 (185, 13)
No.2 Crankshaft Timing Sprocket
2RZ–FE
No.1 Vibration Damper
Crankshaft Position Sensor Rotor
No.1 Timing Chain
N·m (kgf·cm,ft·lbf) : Specified torque
A12102

EM02P–04

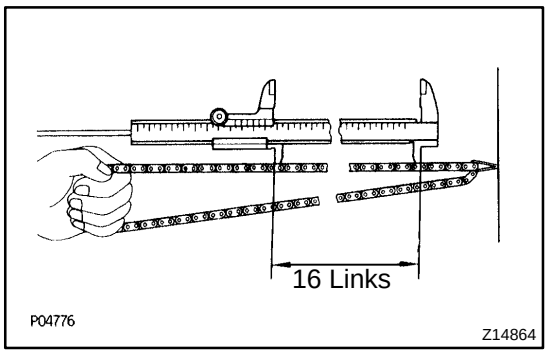

INSPECTION

1. INSPECT TIMING CHAINS AND SPROCKETS

(a) Measure the length of the 16 links with the chain fully stretched.

Maximum chain elongation:

No.1 timing chain	147.5 mm (5.807 in.)
No.2 timing chain (3RZ–FE)	123.6 mm (4.866 in.)

If the elongation is greater than maximum, replace the chain.

HINT:

Make the same measurements pulling at 3 or more places selected at random.

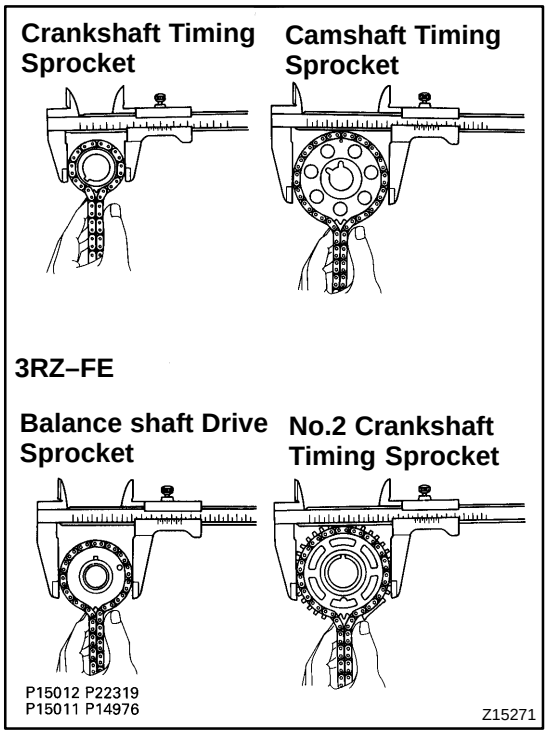

(b) Wrap the chain around the timing sprocket.

(c) Using vernier calipers, measure the sprocket diameter with the chain.

NOTICE:

Vernier calipers must contact the chain rollers for measuring.

Minimum sprocket diameter with chain:

Camshaft	113.8 mm (4.480 in.)
Crankshaft	59.4 mm (2.339 in.)
No.2 crankshaft (3RZ–FE)	96.7 mm (3.807 in.)
Balance shaft (3RZ–FE)	75.9 mm (2.988 in.)

If the diameter is less than minimum, replace the chain with the sprocket.

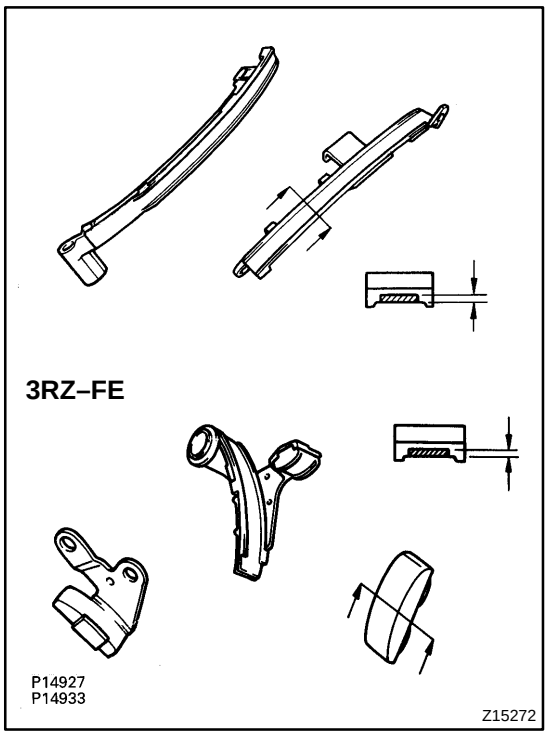

2. INSPECT CHAIN TENSIONER SLIPPER AND VIBRATION DAMPERS

Measure the chain tensioner slipper and vibration damper wears.

Maximum wear: 1.0 mm (0.039 in.)

If the wear is greater than maximum, replace the slipper and/or dampers.

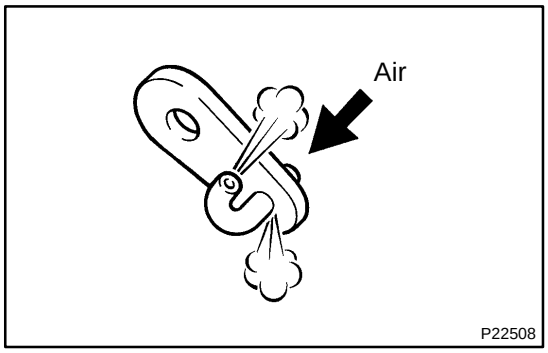

3. 2RZ–FE:
INSPECT OIL JET

Check the oil for damage or clogging.

If necessary, replace the oil jet.

4. INSPECT NO.1 CHAIN TENSIONER
(See page EM–34)

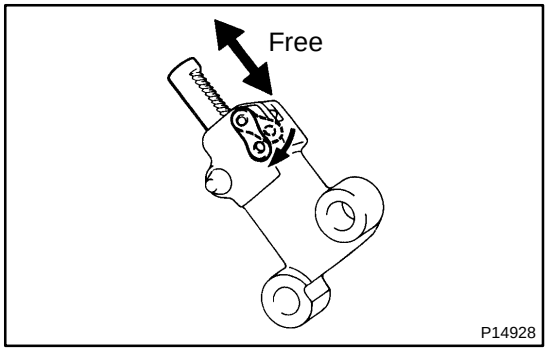

5. 3RZ–FE:
INSPECT NO.2 CHAIN TENSIONER

(a) Inspect the chain tensioner.

(1) Check that the plunger moves smoothly when the ratchet pawl is raised with your finger.

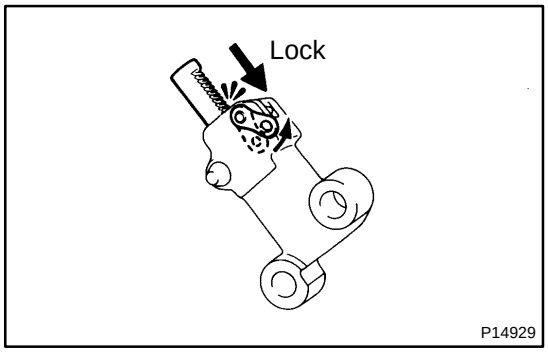

(2) Release the ratchet pawl and check that the plunger is locked in place by the ratchet pawl and does not move when pushed with your finger.

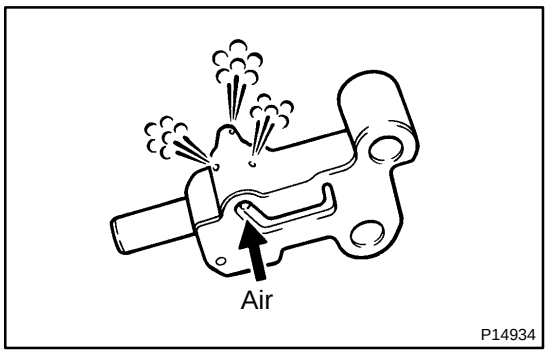

(b) Inspect the oil jet (No.2 chain tensioner).
Check the oil jet for damage or clogging.

If necessary, replace the oil jet (No.2 chain tensioner).

EM16P–01

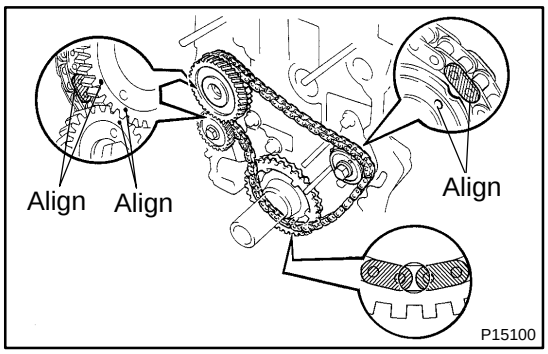

INSTALLATION

NOTICE:

Check that No.1 cylinder is at TDC and that the weights of the No.1 and No.2 balance shafts are at the bottom side.

1. INSTALL NO.4 VIBRATION DAMPER

Install the No.4 damper with the 2 bolts.

2. 3RZ–FE:

INSTALL NO.2 TIMING CHAIN, NO.2 CRANKSHAFT TIMING SPROCKET, BALANCE SHAFT DRIVE GEAR AND SHAFT

(a) Install the No.2 timing chain by matching its mark links with the timing marks on the No.2 crankshaft timing sprocket and balance shaft timing sprocket.

(b) Fit the other mark link of No.2 timing chain onto the sprocket behind the large timing mark of the balance shaft drive gear.

(c) Insert the balance shaft drive gear shaft through the balance shaft drive gear so that it fits into the thrust plate hole.

Then align the small timing mark of the balance shaft drive gear with the timing mark of the balance shaft timing gear.

(d) Install the bolt to the balance shaft drive gear and tighten it.

Torque: 25 N·m (250 kgf·cm, 18 ft·lbf)

(e) Check that each timing mark is matched with the corresponding mark link.

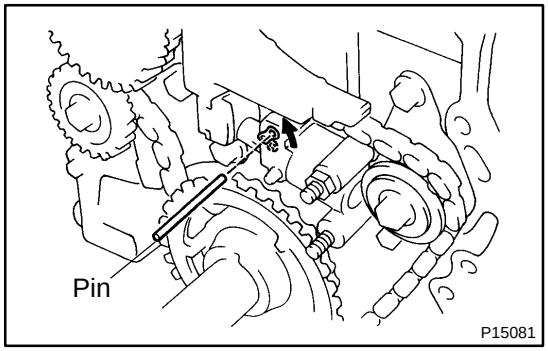

3. 3RZ–FE:

INSTALL NO.2, NO.3 VIBRATION DAMPERS AND NO.2 CHAIN TENSIONER

NOTICE:

- **Assemble the chain tensioner with the pin installed, then remove the pin after assembly.**
- **When doing this, avoid pushing the No.2 vibration damper against the chain.**

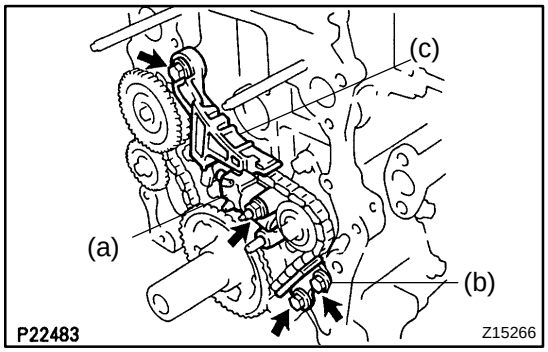

(a) Install the No.2 chain tensioner with the nut.

Torque: 18 N·m (185 kgf·cm, 13 ft·lbf)

(b) Install No.3 damper with the 2 bolts.

Torque: 18 N·m (185 kgf·cm, 13 ft·lbf)

(c) Install No.2 damper with the bolt.

Torque: 27 N·m (270 kgf·cm, 20 ft·lbf)

(d) Remove a pin from the No.2 chain tensioner and free the plunger.

4. 2RZ–FE:
INSTALL OIL JET

Install a new gasket and the oil jet with the bolt.
Torque:18 N·m (185 kgf·cm, 13 ft·lbf)

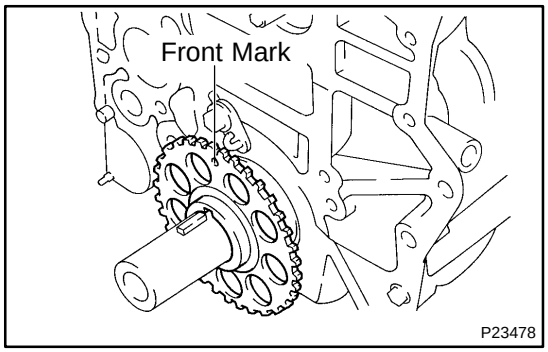

5. 2RZ–FE:
INSTALL CRANKSHAFT POSITION SENSOR ROTOR

Install the rotor to the crankshaft with the front mark (cavity) of the rotor facing forward.

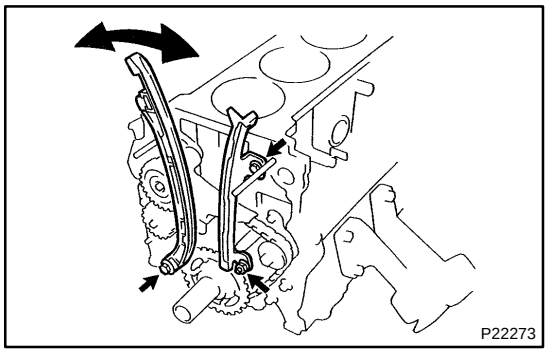

6. INSTALL NO.1 TIMING CHAIN TENSIONER SLIPPER AND NO.1 VIBRATION DAMPER

(a) Install the No.1 damper with the bolt and nut.
Torque: 29 N·m (300 kgf·cm, 22 ft·lbf)
(b) Install the slipper with the bolt.
Torque: 27 N·m (270 kgf·cm, 20 ft·lbf)
(c) Check that the slipper moves smoothly.

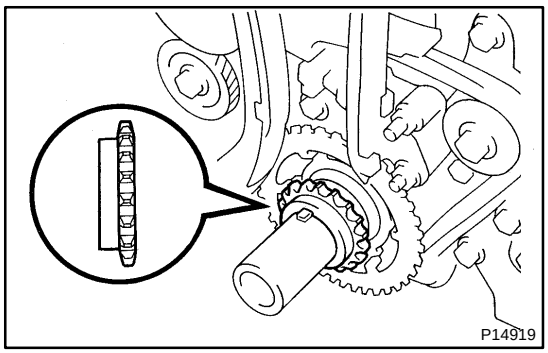

7. INSTALL CRANKSHAFT TIMING SPROCKET

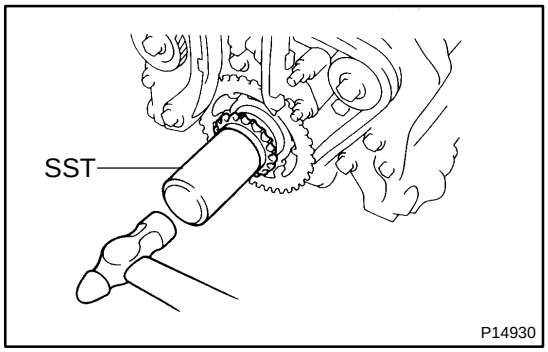

HINT:
If necessary, install the sprocket with SST.
SST 09636–20010

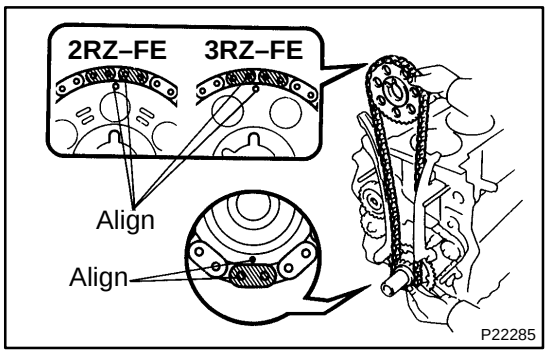

8. INSTALL NO.1 TIMING CHAIN AND CAMSHAFT TIMING SPROCKET

(a) Align the timing mark between the mark link of the No.1 timing chain, and install the No.1 timing chain to the timing sprocket.

(b) Align the timing mark of the crankshaft timing sprocket with the mark link of the No.1 timing chain and install the No.1 timing chain.

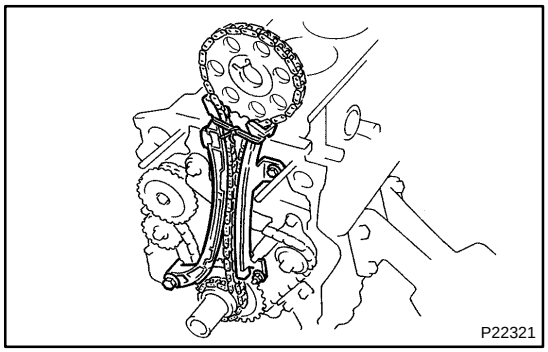

(c) Tie the No.1 timing chain with a cord as shown in the illustration, and make sure it doesn't come loose.

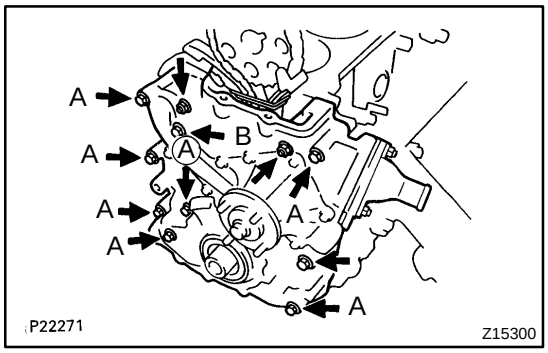

9. INSTALL TIMING CHAIN COVER

(a) Install 3 new gaskets to the cylinder block and water bypass pipe.

(b) Install the timing chain cover with the 9 bolts and 2 nuts.
Torque:
20 N·m (200 kgf·cm, 14 ft·lbf) for 12 mm head bolt A
24.5 N·m (250 kgf·cm, 18 ft·lbf) for 12 mm head bolt B
44 N·m (440 kgf·cm, 32 ft·lbf) for 14 mm head bolt
20 N·m (200 kgf·cm, 14 ft·lbf) for nut

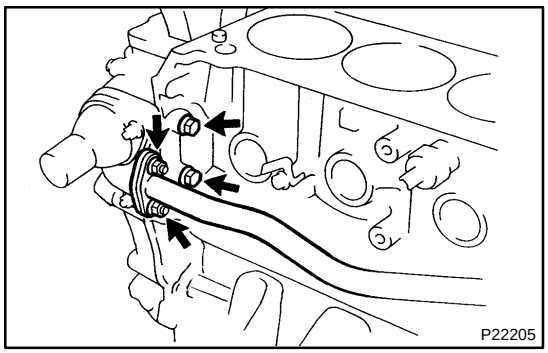

(c) Install the 2 timing chain cover bolts.
Torque: 18 N·m (185 kgf·cm, 13 ft·lbf)

(d) Install the 2 water bypass pipe nuts.
Torque: 20 N·m (200 kgf·cm, 14 ft·lbf)

(e) Remove the cord from the chain.

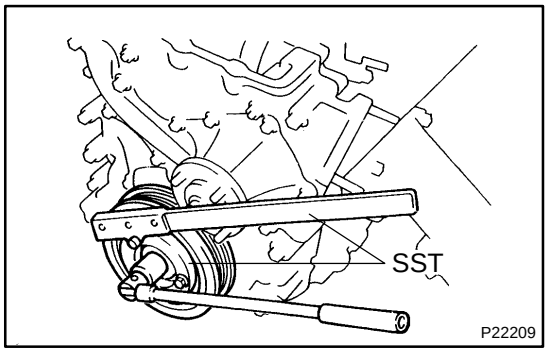

10. INSTALL CRANKSHAFT PULLEY

(a) Align the pulley set key with the key groove of the pulley, and slide on the pulley.

(b) Using SST, install and torque the pulley bolt.
SST 09213–54015, 09330–00021
Torque: 260 N·m (2,650 kgf·cm, 193 ft·lbf)

(c) w/ A/C:
Install the No.3 and No.2 crankshaft pulleys with the 4 bolts.
Torque: 25 N·m (250 kgf·cm, 18 ft·lbf)

11. INSTALL OIL STRAINER

Install a new gasket and the oil strainer with the bolt and 2 nuts.

Torque: 18 N·m (185 kgf·cm, 13 ft·lbf)

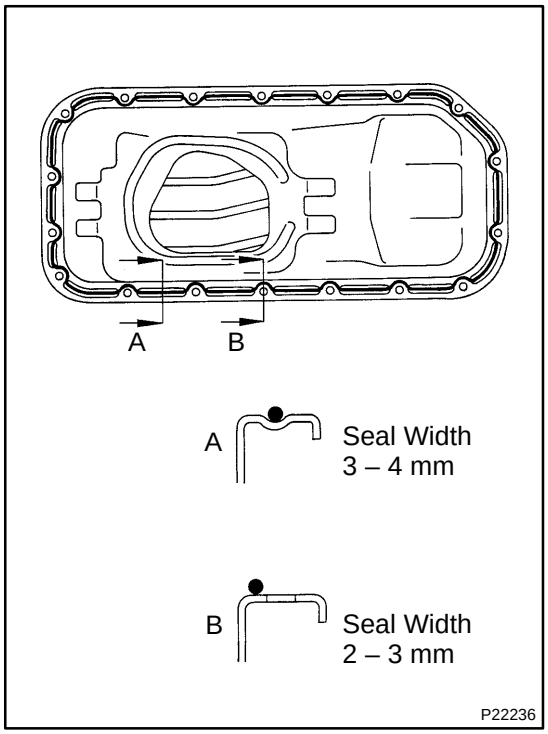

12. INSTALL OIL PAN

(a) Remove any old packing (FIPG) material and be careful not to drop any oil on the contact surface of the oil pan.

- Using a razor blade and gasket scraper, remove all the old packing (FIPG) material from the gasket surfaces and sealing grooves.
- Thoroughly clean all components to remove all the loose material.
- Using a non–residue solvent, clean both sealing surfaces.

NOTICE:

Do not use a solvent which will affect the painted surfaces.

(b) Apply seal packing to the oil pan as shown in the illustration.

Seal packing: Part No. 08826–00080 or equivalent

- Install a nozzle that has been cut to a 2 – 3 mm (0.08 – 0.12 in.) opening or 3 – 4 mm (0.012 – 0.016 in.) opening.

HINT:

Avoid applying an excessive amount to the surface.

- Parts must be assembled within 5 minutes of application. Otherwise the material must be removed and reapplied.
- Immediately remove nozzle from the tube and reinstall cap.

(c) Install the oil pan with the 16 bolts and 2 nuts.

Torque: 12.5 N·m (130 kgf·cm, 9 ft·lbf)

13. INSTALL FLYWHEEL HOUSING UNDER COVER AND DUST SEAL

14. 2WD:

INSTALL STIFFENER PLATES

Torque: 37 N·m (380 kgf·cm, 27 ft·lbf)

15. INSTALL CRANKSHAFT POSITION SENSOR

Install a new O–ring.

Torque: 8.5 N·m (85 kgf·cm, 74 in.·lbf)

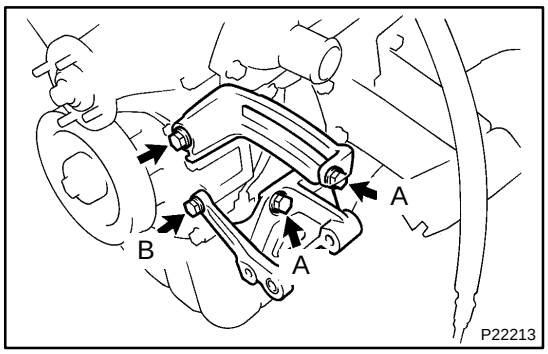

16. INSTALL GENERATOR, ADJUSTING BAR AND BRACKET

(a) Install the bracket with the 3 bolts.
Torque:
74.5 N·m (760 kgf·cm, 55 ft·lbf) for bolt A
18 N·m (185 kgf·cm, 13 ft·lbf) for bolt B

(b) Install the adjusting bar with the bolt.
Torque: 63.5 N·m (650 kgf·cm, 47 ft·lbf)

(c) Install the generator with the pivot bolt and lock bolt.

17. INSTALL A/C COMPRESSOR AND BRACKET

(a) Install the A/C compressor bracket with the 4 bolts.
Torque: 44 N·m (440 kgf·cm, 32 ft·lbf)

(b) Install the A/C compressor with the 4 bolts.
Torque: 25 N·m (250 kgf·cm, 18 ft·lbf)

18. INSTALL CYLINDER HEAD ASSEMBLY (See page EM–57)

19. INSTALL WATER PUMP PULLEY, FAN WITH FLUID COUPLING AND DRIVE BELT FOR GENERATOR

20. 4WD:
INSTALL FRONT DIFFERENTIAL AND DRIVE SHAFTS ASSEMBLY

21. FILL WITH ENGINE OIL

22. START ENGINE AND CHECK FOR LEAKS

23. INSTALL ENGINE UNDER COVER

24. VEHICLE ROAD TEST

Check for abnormal noise, shock slippage, correct shift points and smooth operation.

25. RECHECK ENGINE COOLANT AND ENGINE OIL LEVEL

EM02O–07

REMOVAL

1. **REMOVE ENGINE UNDER COVER**
2. **DRAIN ENGINE OIL**
3. **4WD:**
   REMOVE FRONT DIFFERENTIAL AND DRIVE SHAFTS ASSEMBLY
4. **REMOVE DRIVE BELT FOR GENERATOR, FAN WITH FLUID COUPLING AND WATER PUMP PULLEY (See page CO–5)**
5. **REMOVE CYLINDER HEAD ASSEMBLY (See page EM–34)**

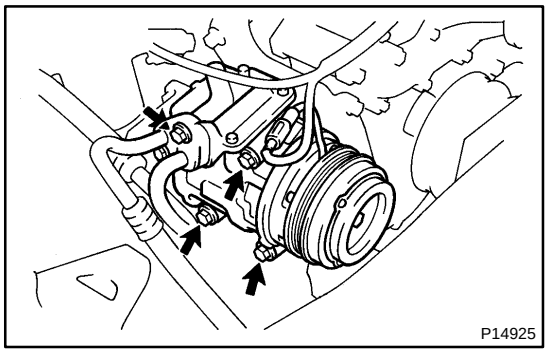
P14925

6. DISCONNECT A/C COMPRESSOR AND BRACKET

(a) Remove the 4 bolts, and disconnect the compressor from the bracket.

HINT:

Put aside the compressor, and suspend it.

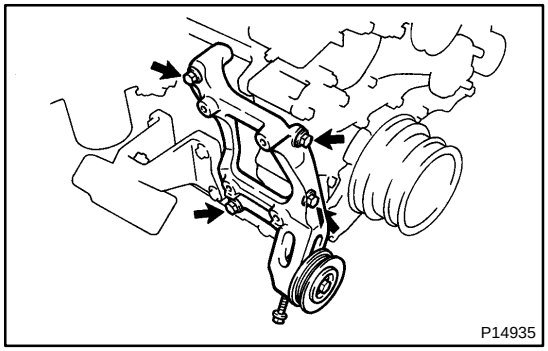
P14935

(b) Remove the 4 bolts and A/C compressor bracket.

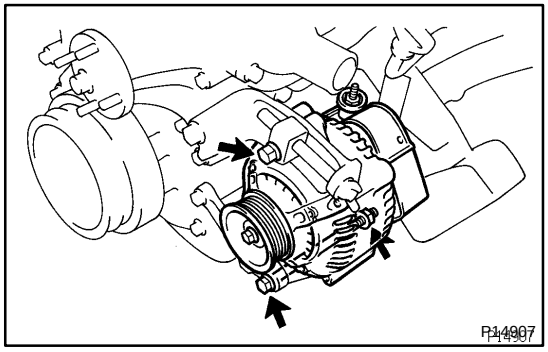
P14907

7. REMOVE GENERATOR, ADJUSTING BAR AND BRACKET

(a) Disconnect the generator connector.

(b) Remove the nut, and disconnect the generator wire and wire clip.

(c) Remove the lock bolt, pivot bolt and generator.

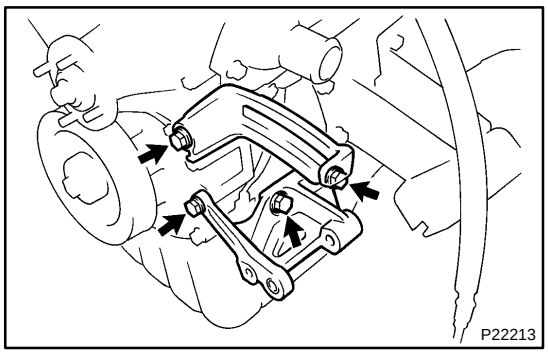

(d) Remove the bolt and adjusting bar.
(e) Remove the 3 bolts and generator bracket.

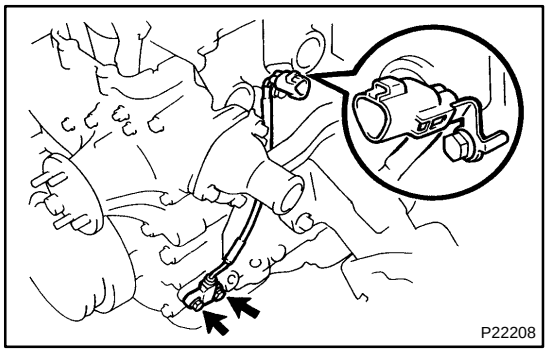

8. REMOVE CRANKSHAFT POSITION SENSOR
(a) Remove the 2 bolts and crankshaft position sensor.
(b) Remove the O–ring from the crankshaft position sensor.

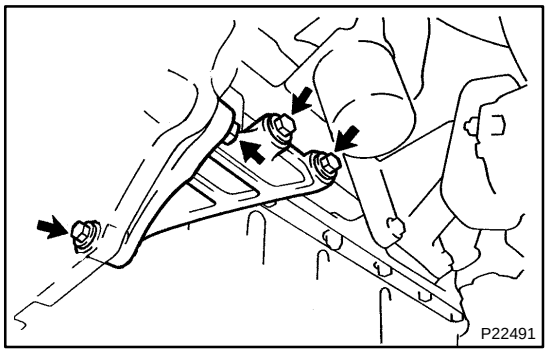

9. 2WD:
REMOVE STIFFENER PLATES
Remove the 8 bolts and stiffener plates.
10. REMOVE FLYWHEEL HOUSING UNDER COVER AND DUST SEAL

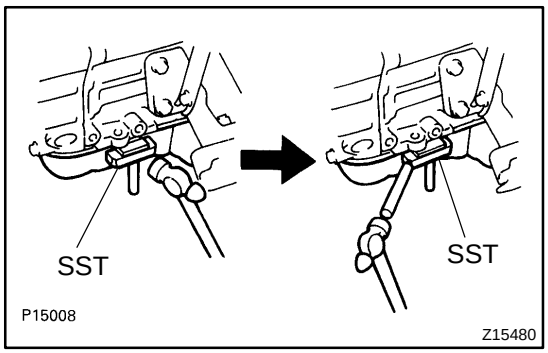

11. REMOVE OIL PAN
(a) Remove the 16 bolts and 2 nuts.
(b) Insert the blade of SST between the cylinder block and oil pan, cut off applied sealer and remove the oil pan.
SST 09032–00100

NOTICE:
Be careful not to damage the oil pan flanges of the oil pan and cylinder block.

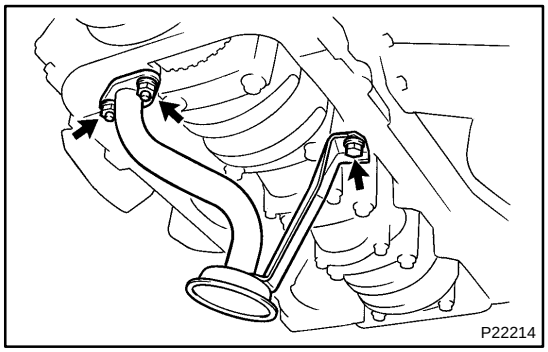

12. REMOVE OIL STRAINER
Remove the bolt, 2 nuts, oil strainer and gasket.

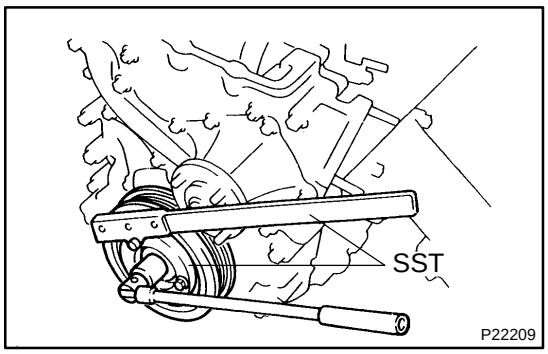

13. REMOVE CRANKSHAFT PULLEY

(a) w/ A/C:
Remove the 4 bolts, No.2 and No.3 crankshaft pulleys.

(b) Using SST, remove the pulley bolt.
SST 09213–54015, 09330–00021

(c) Remove the crankshaft pulley.

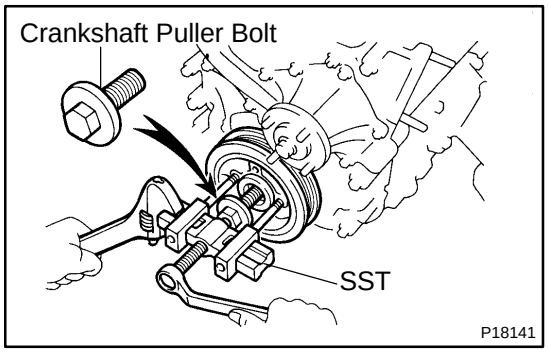

HINT:
If necessary, remove the pulley with SST and crankshaft pulley bolt.
SST 09950–50013 (09951–05010, 09952–05010, 09953–05010, 09954–05020)

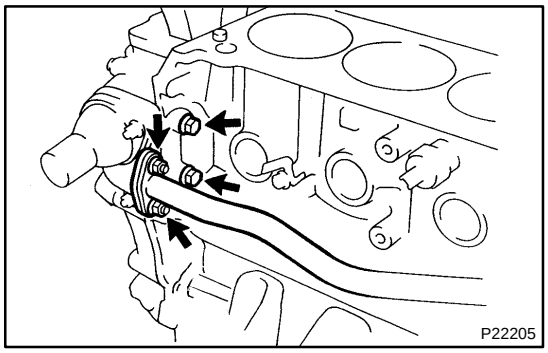

14. REMOVE TIMING CHAIN COVER

(a) Remove the 2 water bypass pipe nuts.

(b) Remove the 2 timing chain cover bolts.

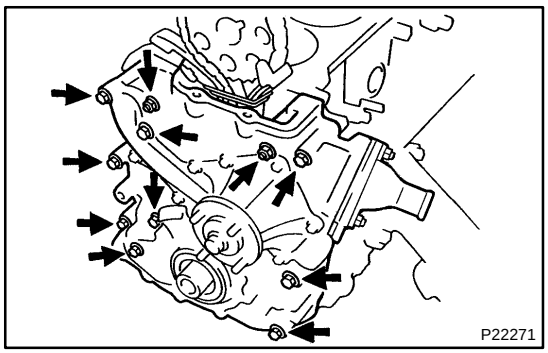

(c) Remove the 9 bolts and 2 nuts.

(d) Using a plastic faced hammer, loosen the chain cover and remove the timing chain cover and 3 gaskets.

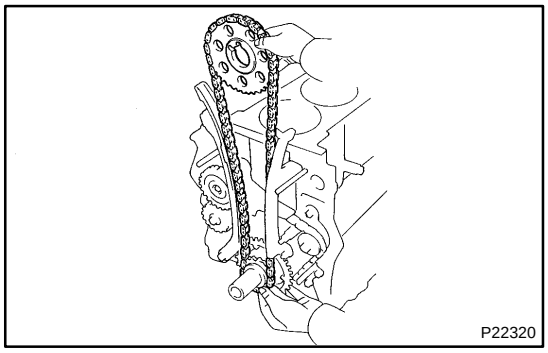

15. REMOVE NO.1 TIMING CHAIN AND CAMSHAFT TIMING SPROCKET

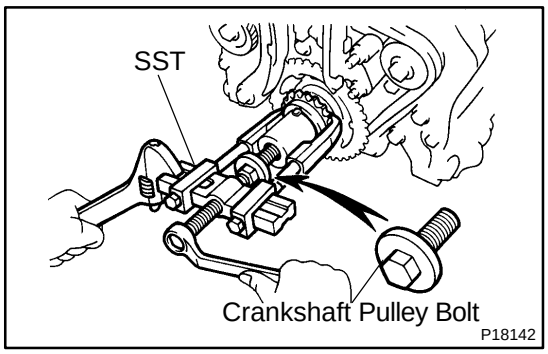

16. REMOVE CRANKSHAFT TIMING SPROCKET

HINT:

If necessary, remove the sprocket with SST and crankshaft pulley bolt.

SST 09950–40011 (09951–04010, 09952–04010, 09953–04010, 09954–04010, 09955–04061)

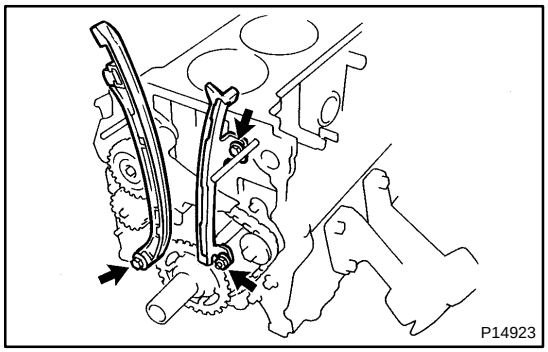

17. REMOVE NO.1 TIMING CHAIN TENSIONER SLIPPER AND NO.1 VIBRATION DAMPER

(a) Remove the bolt and slipper.

(b) 2RZ–FE:
Remove the 2 bolts and No.1 damper.

(c) 3RZ–FE:
Remove the bolt, nut and No.1 damper.

18. 2RZ–FE:
REMOVE CRANKSHAFT POSITION SENSOR ROTOR

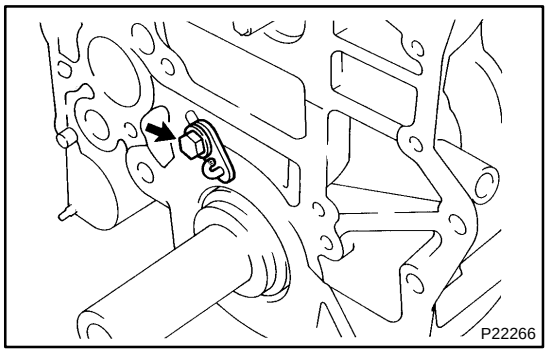

19. 2RZ–FE:
REMOVE TIMING CHAIN OIL JET

Remove the bolt, oil jet and gasket.

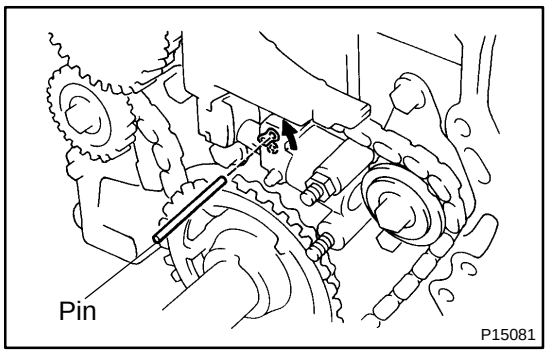

20. 3RZ–FE:
REMOVE NO.2, NO.3 VIBRATION DAMPERS AND NO.2 CHAIN TENSIONER

(a) Install a pin to the No.2 chain tensioner and lock the plunger.

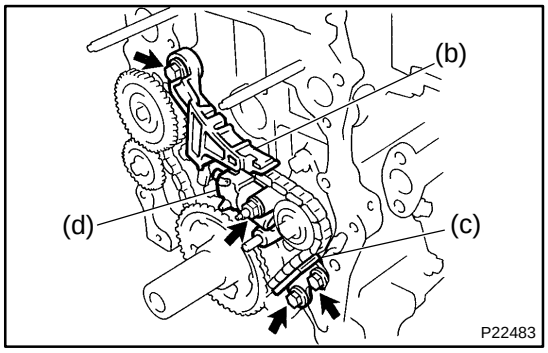

(b) Remove the bolt and No.2 damper.

(c) Remove the 2 bolts and No.3 damper.

(d) Remove the nut and No.2 chain tensioner.

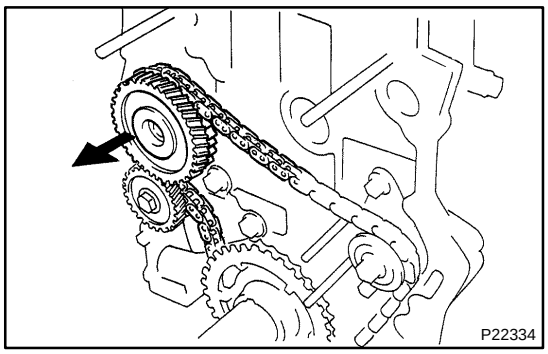

21. 3RZ–FE:
REMOVE BALANCE SHAFT DRIVE GEAR, SHAFT, NO.2 TIMING CHAIN AND NO.2 CRANKSHAFT TIMING SPROCKET

(a) Remove the bolt from the balance shaft drive gear.
(b) Remove the balance shaft drive gear with the shaft.
(c) Remove the No.2 timing chain with the No.2 crankshaft timing sprocket.

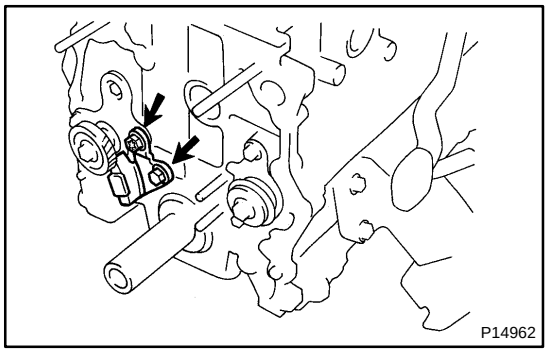

22. 3RZ–FE:
REMOVE NO.4 VIBRATION DAMPER

Remove the 2 bolts and No.4 damper.

VALVE CLEARANCE

INSPECTION

EM02K–06

HINT:

Inspect and adjust the valve clearance when the engine is cold.

1. REMOVE INTAKE AIR CONNECTOR (See page EM–34)

2. REMOVE PCV HOSES

3. REMOVE IGNITION COILS (WITH IGNITER)

4. DISCONNECT ENGINE WIRE

(a) w/ A/C:
Disconnect the A/C compressor connector.

(b) Disconnect the oil pressure sensor connector.

(c) Disconnect the ECT sender gauge connector.

(d) Disconnect the 4 engine wire clamps and engine wire.

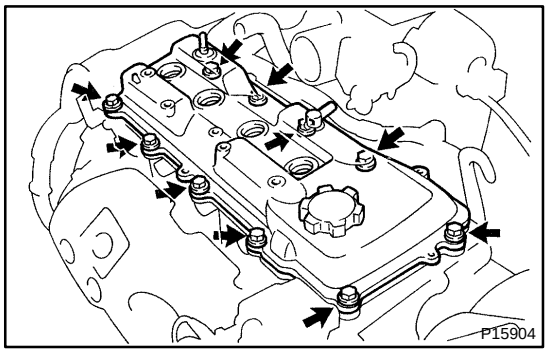

5. REMOVE CYLINDER HEAD COVER

Remove the 10 bolts, 10 seal washers, cylinder head cover and gasket.

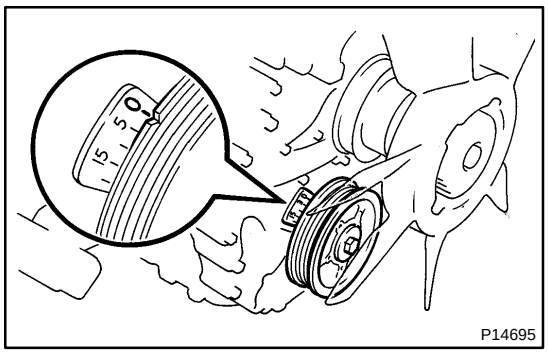

6. SET NO.1 CYLINDER TO TDC/COMPRESSION

(a) Turn the crankshaft pulley clockwise and align its groove with the ”0” mark on the timing chain cover.

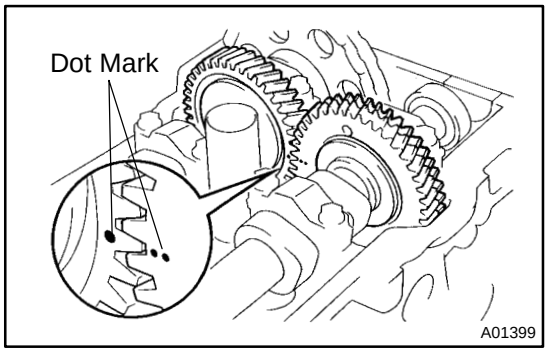

(b) Check that the timing marks (1 and 2 dots) of the camshaft drive and driven gears are in straight line on the cylinder head surface as shown in the illustration. If not, turn the crankshaft 1 revolution (360˚) and align the marks as above.

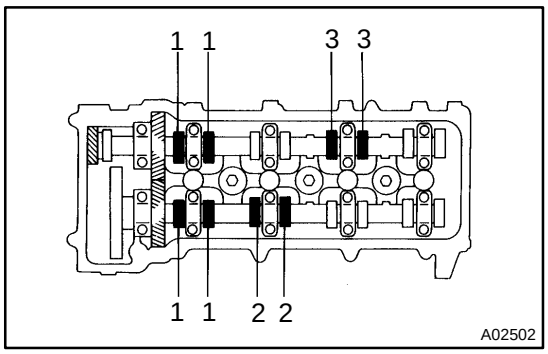

7. INSPECT VALVE CLEARANCE

(a) Check only the valves indicated.

(1) Using a feeler gauge, measure the clearance between the valve lifter and camshaft.

(2) Record the out–of–specification valve clearance measurements. They will be used later to determine the required replacement adjusting shim.

Valve clearance (Cold):

Intake	0.15 – 0.25 mm (0.006 – 0.010 in.)
Exhaust	0.25 – 0.35 mm (0.010 – 0.014 in.)

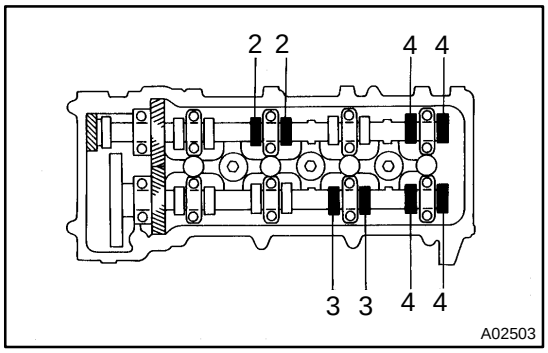

(b) Turn the crankshaft pulley 1 revolution (360°) and align its groove with timing mark ”0” of the timing chain cover.

(c) Check only the valves indicated as shown. Measure the valve clearance (See procedure in step (a)).

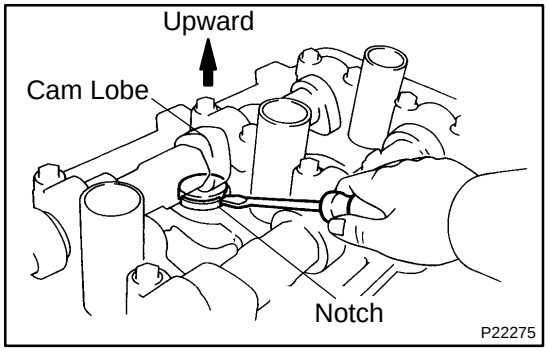

8. ADJUST VALVE CLEARANCE

(a) Remove the adjusting shim.

(1) Turn the crankshaft to position the cam lobe of the camshaft on the adjusting valve upward.

(2) Position the notch of the valve lifter toward the spark plug side.

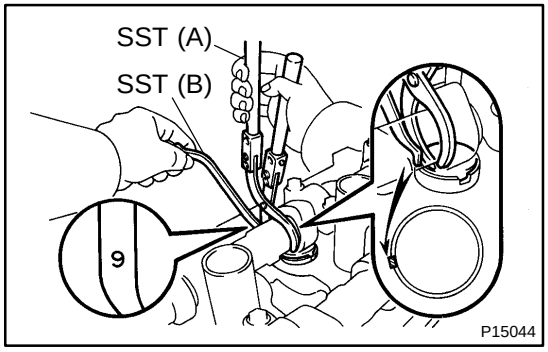

(3) Using SST (A), press down the valve lifter and place SST (B) between the camshaft and valve lifter flange. Remove SST (A).

SST 09248–55040 (09248–05410, 09248–05420)

HINT:

Apply SST (B) at slight angle on the side marked with ”9”, at the position shown in the illustration.

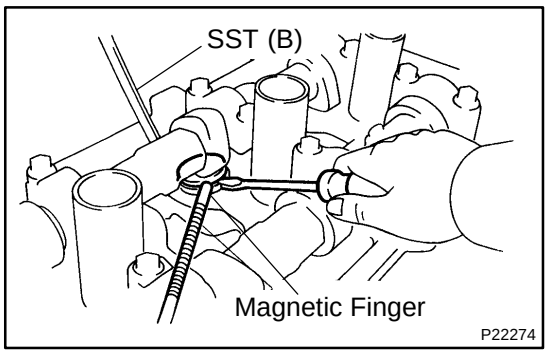

(4) Remove the adjusting shim with a small screwdriver and magnetic finger.

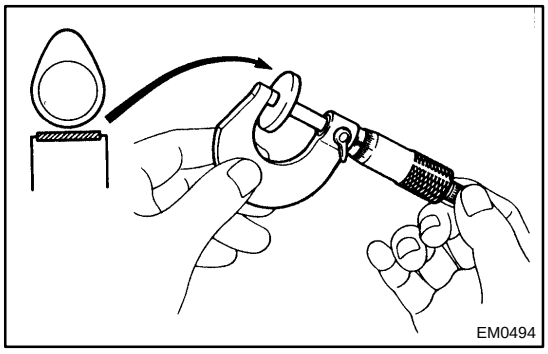

(b) Determine the replacement adjusting shim size by these Formula or Charts:

(1) Using a micrometer, measure the thickness of the removed shim.

(2) Calculate the thickness of a new shim so that the valve clearance comes within the specified value.

T ..... Thickness of removed shim
A ..... Measured valve clearance
N ..... Thickness of new shim
Intake: N = T + (A – 0.20 mm (0.008 in.)
Exhaust: N = T + (A – 0.30 mm (0.012 in.)

(3) Select a new shim with a thickness as close as possible to the calculated value.

HINT:
Shims are available in 17 sized in increments of 0.05 mm (0.0020 in.), from 2.50 mm (0.0984 in.) to 3.30 mm (0.1299 in.).

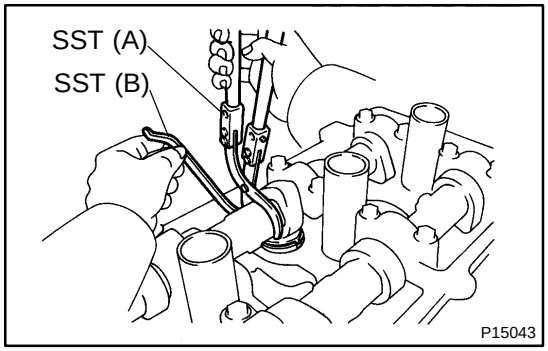

(c) Install a new adjusting shim.

(1) Place a new adjusting shim on the valve lifter.

(2) Using SST (A), press down the valve lifter and remove SST (B).

SST 09248–55040 (09248–05410, 09248–05420)

(d) Recheck the valve clearance.

9. REINSTALL CYLINDER HEAD COVER
10. RECONNECT ENGINE WIRE
11. REINSTALL HIGH–TENSION CORDS TO SPARK-PLUGS
12. REINSTALL PCV HOSES
13. REINSTALL INTAKE AIR CONNECTOR (See page EM–57)

Adjusting Shim Selection Chart (Intake)

| Measured clearance mm (in.) \ Installed shim thickness mm (in.) | 2.500 (0.0984) | 2.520 (0.0992) | 2.540 (0.1000) | 2.560 (0.1004) | 2.580 (0.1008) | 2.600 (0.1016) | 2.620 (0.1024) | 2.640 (0.1031) | 2.650 (0.1039) | 2.660 (0.1043) | 2.680 (0.1047) | 2.700 (0.1055) | 2.710 (0.1063) | 2.720 (0.1067) | 2.730 (0.1071) | 2.740 (0.1075) | 2.750 (0.1079) | 2.760 (0.1083) | 2.770 (0.1087) | 2.780 (0.1091) | 2.790 (0.1094) | 2.800 (0.1098) | 2.810 (0.1102) | 2.820 (0.1106) | 2.830 (0.1110) | 2.840 (0.1114) | 2.850 (0.1118) | 2.860 (0.1122) | 2.870 (0.1126) | 2.880 (0.1130) | 2.890 (0.1134) | 2.900 (0.1138) | 2.910 (0.1142) | 2.920 (0.1146) | 2.930 (0.1150) | 2.940 (0.1154) | 2.950 (0.1157) | 2.960 (0.1161) | 2.970 (0.1166) | 2.980 (0.1169) | 2.990 (0.1173) | 3.000 (0.1177) | 3.010 (0.1181) | 3.020 (0.1185) | 3.030 (0.1189) | 3.040 (0.1193) | 3.050 (0.1197) | 3.060 (0.1201) | 3.070 (0.1205) | 3.080 (0.1209) | 3.090 (0.1213) | 3.100 (0.1217) | 3.120 (0.1220) | 3.140 (0.1228) | 3.150 (0.1236) | 3.160 (0.1240) | 3.180 (0.1244) | 3.200 (0.1252) | 3.220 (0.1260) | 3.240 (0.1268) | 3.250 (0.1276) | 3.260 (0.1280) | 3.280 (0.1283) | 3.300 (0.1291) | 3.300 (0.1299) |
|---|---|---

Adjusting Shim Selection Chart (Exhaust)

| Measured clearance mm (in.) \ Installed shim thickness mm (in.) | 2.500 (0.0984) | 2.520 (0.0992) | 2.540 (0.1000) | 2.550 (0.1004) | 2.560 (0.1008) | 2.580 (0.1016) | 2.600 (0.1024) | 2.620 (0.1031) | 2.640 (0.1039) | 2.650 (0.1043) | 2.660 (0.1047) | 2.680 (0.1055) | 2.700 (0.1063) | 2.710 (0.1067) | 2.720 (0.1071) | 2.730 (0.1075) | 2.740 (0.1079) | 2.750 (0.1083) | 2.760 (0.1087) | 2.770 (0.1091) | 2.780 (0.1094) | 2.790 (0.1098) | 2.800 (0.1102) | 2.810 (0.1106) | 2.820 (0.1110) | 2.830 (0.1114) | 2.840 (0.1118) | 2.850 (0.1122) | 2.860 (0.1126) | 2.870 (0.1130) | 2.880 (0.1134) | 2.890 (0.1138) | 2.900 (0.1142) | 2.910 (0.1146) | 2.920 (0.1150) | 2.930 (0.1154) | 2.940 (0.1157) | 2.950 (0.1161) | 2.960 (0.1166) | 2.970 (0.1169) | 2.980 (0.1173) | 2.990 (0.1177) | 3.000 (0.1181) | 3.010 (0.1185) | 3.020 (0.1189) | 3.030 (0.1193) | 3.040 (0.1197) | 3.050 (0.1201) | 3.060 (0.1205) | 3.070 (0.1209) | 3.080 (0.1213) | 3.090 (0.1217) | 3.100 (0.1220) | 3.120 (0.1228) | 3.140 (0.1236) | 3.150 (0.1240) | 3.160 (0.1244) | 3.180 (0.1252) | 3.200 (0.1260) | 3.220 (0.1268) | 3.240 (0.1276) | 3.250 (0.1280) | 3.260 (0.1283) | 3.280 (0.1291) | 3.300 (0.1299) |
|---|---|---

CO/HC

INSPECTION

EM03L–09

HINT:

This check is used only to determine whether or not the idle CO/HC complies with regulations.

1. INITIAL CONDITIONS

(a) Engine at normal operating temperature.
(b) Air cleaner installed.
(c) All pipes and hoses of air induction system connected.
(d) All accessories switched OFF.
(e) All vacuum lines properly connected.
(f) SFI system wiring connectors fully plugged.
(g) Ignition timing checked correctly.
(h) Transmission in neutral position.
(i) Tachometer and CO/HC meter calibrated by hand.

2. START ENGINE

3. RACE ENGINE AT 2,500 RPM FOR APPROX. 180 SECONDS

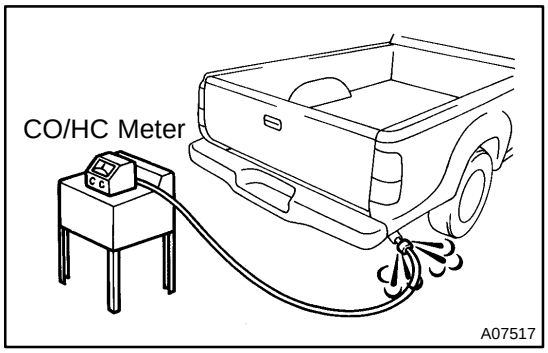

4. INSERT CO/HC METER TESTING PROBE AT LEAST 40 cm (1.3 ft) INTO TAILPIPE DURING IDLING

5. IMMEDIATELY CHECK CO/HC CONCENTRATION AT IDLE AND/OR 2,500 RPM

Complete the measuring within 3 minutes.

HINT:

When doing the 2 mode (2,500 rpm and idle) test, follow the measurement order prescribed by the applicable local regulations.

6. TROUBLESHOOTING

If the CO/HC concentration does not comply with regulations, troubleshoot in the order given below.

(1) Check the A/F sensor or heated oxygen sensor operation (See page DI–288).
(2) See the table below for possible causes, and then inspect and correct the applicable causes if necessary.

CO	HC	Symptoms	Causes
Normal	High	Rough idle	5. Faulty ignition: • Incorrect timing • Fouled, shorted or improperly gapped plugs • Open or crossed high–tension cords 6. Incorrect valve clearance 7. Leaky intake and exhaust valves 8. Leaky cylinder
Low	High	Rough idle (Fluctuating HC reading)	1. Vacuum leak: • PCV hose • Intake manifold • Air intake chamber • Intake air connector • Throttle body • IAC valve • Brake booster line 2. Lean mixture causing misfire
High	High	Rough idle (Black smoke from exhaust)	1. Restricted air filter 2. Plugged PCV valve 3. Faulty SFI systems: • Faulty fuel pressure regulator • Clogged fuel return line • Defective ECT sensor • Faulty ECM • Faulty injector • Faulty throttle position sensor • Faulty MAF meter

COMPRESSION

INSPECTION

EM01D–09

HINT:

If there is lack of power, excessive oil consumption or poor fuel economy, measure the compression pressure.

1. WARM UP AND STOP ENGINE

Allow the engine to warm up to normal operating temperature.

2. REMOVE SPARK PLUGS (See page IG–1)

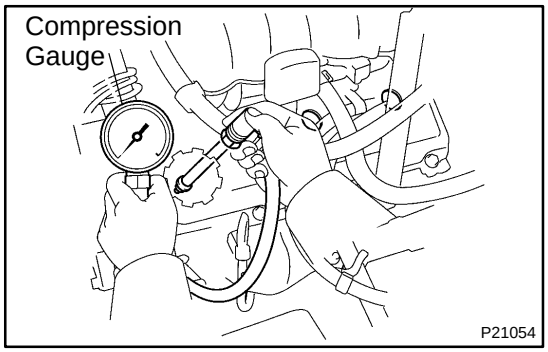

3. CHECK CYLINDER COMPRESSION PRESSURE

(a) Insert a compression gauge into the spark plug hole.

(b) Fully open the throttle.

(c) While cranking the engine, measure the compression pressure.

HINT:

Always use a fully charged battery to obtain engine speed of 250 rpm or more.

(d) Repeat steps (a) through (c) for each cylinder.

NOTICE:

This measurement must be done in as short a time as possible.

Compression pressure:
1,200 kPa (12.2 kgf/cm^2, 174 psi) or more
Minimum pressure:
1,000 kPa (10.2 kgf/cm^2, 145 psi)
Difference between each cylinder:
100 kPa (1.0 kgf/cm^2, 15 psi) or less

(e) If the cylinder compression in 1 or more cylinders is low, pour a small amount of engine oil into the cylinder through the spark plug hole and repeat steps (a) through (c) for cylinders with low compression.

- If adding oil helps the compression, it is likely that the piston rings and/or cylinder bore are worn or damaged.
- If pressure stays low, a valve may be sticking or seating is improper, or there may be leakage past the gasket.

4. REINSTALL SPARK PLUGS (See page IG–1)

CYLINDER BLOCK

COMPONENTS

EM01X–10

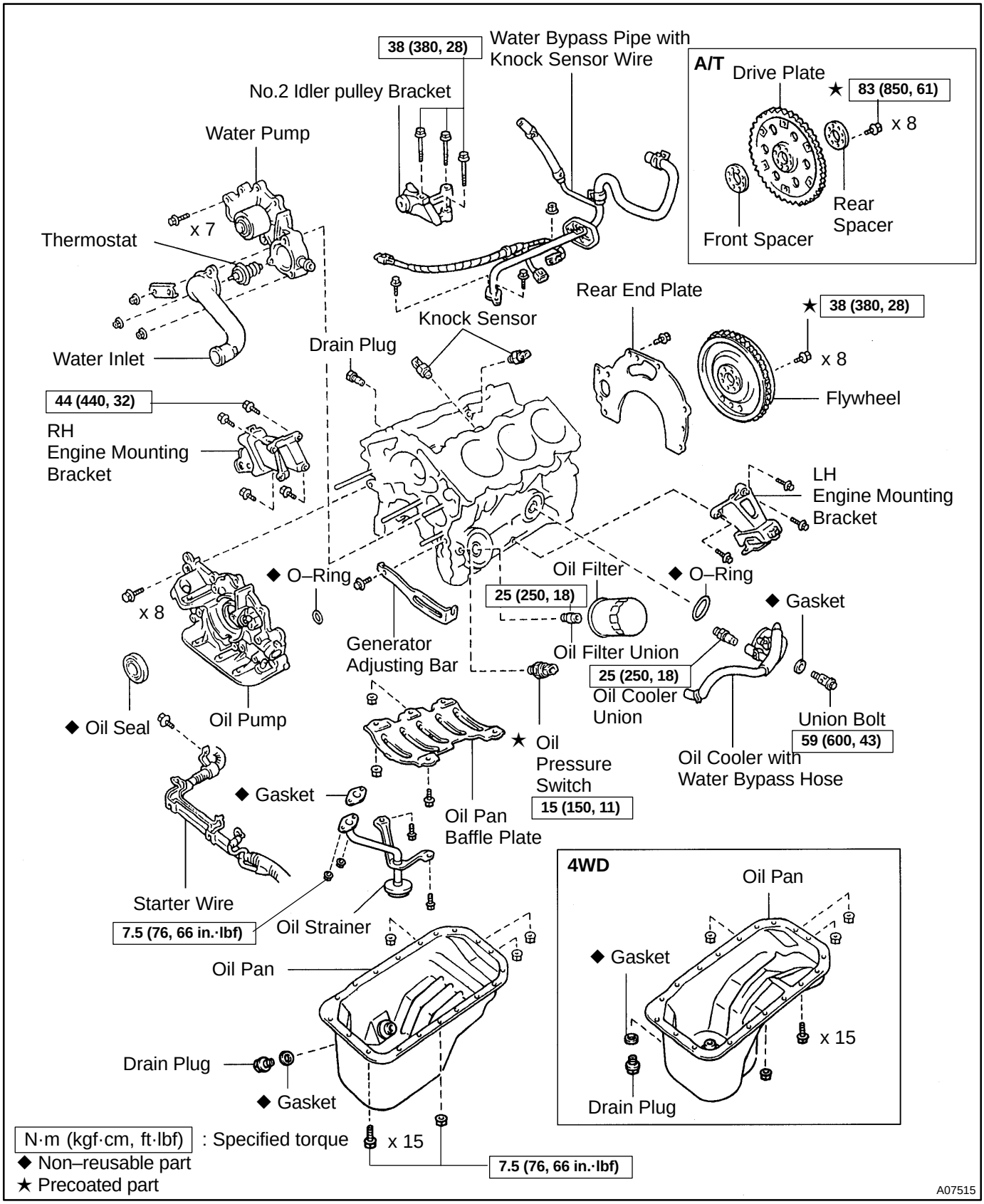

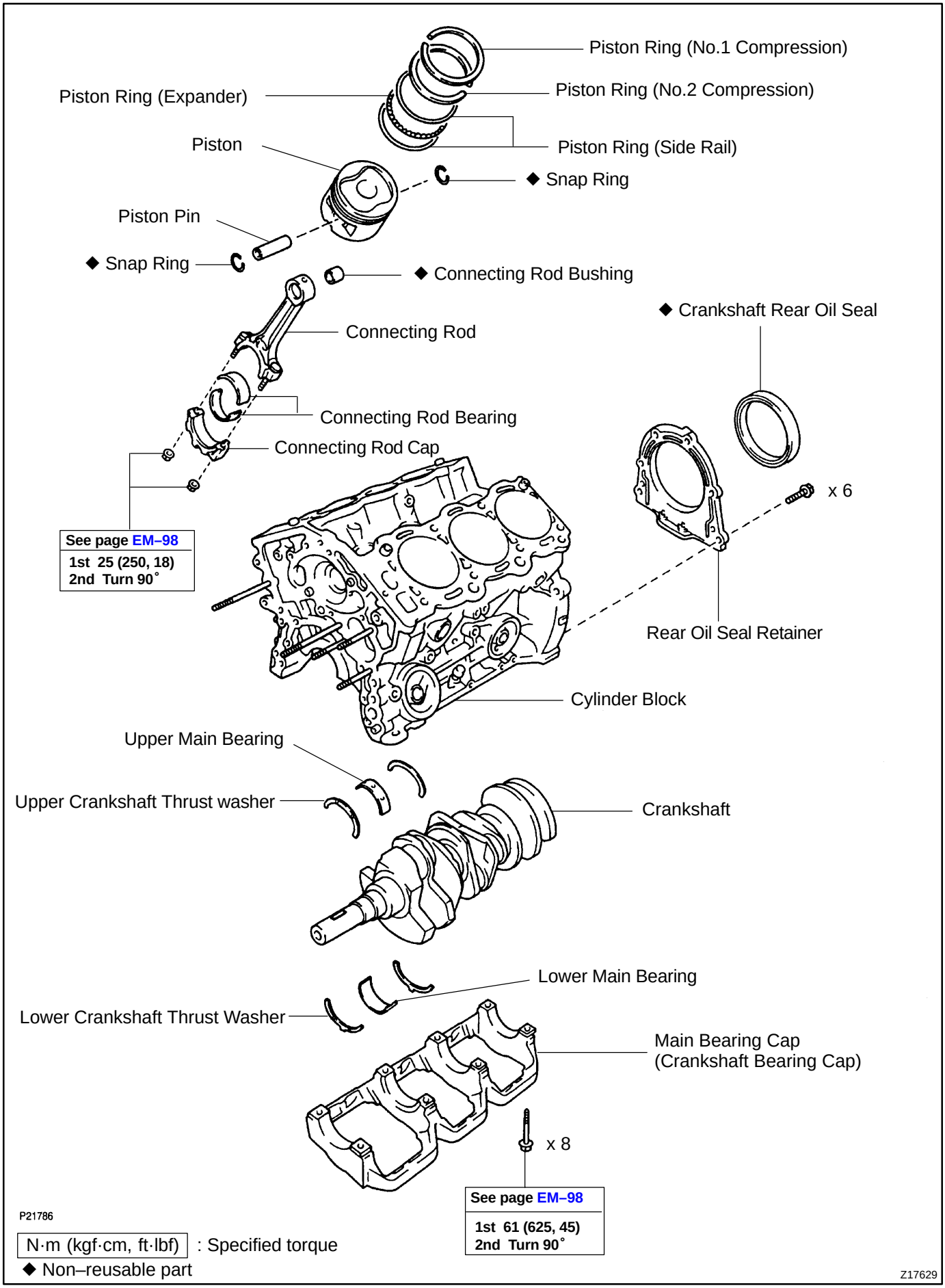
Piston Ring (No.1 Compression)
Piston Ring (Expander)
Piston Ring (No.2 Compression)
Piston
Piston Ring (Side Rail)
◆ Snap Ring
Piston Pin
◆ Snap Ring
◆ Connecting Rod Bushing
◆ Crankshaft Rear Oil Seal
Connecting Rod
Connecting Rod Bearing
Connecting Rod Cap
x 6
See page EM–98
1st 25 (250, 18)
2nd Turn 90°
Rear Oil Seal Retainer
Cylinder Block
Upper Main Bearing
Upper Crankshaft Thrust washer
Crankshaft
Lower Main Bearing
Lower Crankshaft Thrust Washer
Main Bearing Cap
(Crankshaft Bearing Cap)
x 8
See page EM–98
1st 61 (625, 45)
2nd Turn 90°
P21786
N·m (kgf·cm, ft·lbf) : Specified torque
◆ Non–reusable part
Z17629

EM104–04

DISASSEMBLY

1. **M/T:**
   REMOVE FLYWHEEL
2. **A/T:**
   REMOVE DRIVE PLATE
3. **REMOVE REAR END PLATE**
4. **INSTALL ENGINE TO ENGINE STAND FOR DISASSEMBLY**
5. **REMOVE TIMING BELT AND PULLEYS (See page EM–13)**
6. **REMOVE CYLINDER HEADS (See page EM–29)**

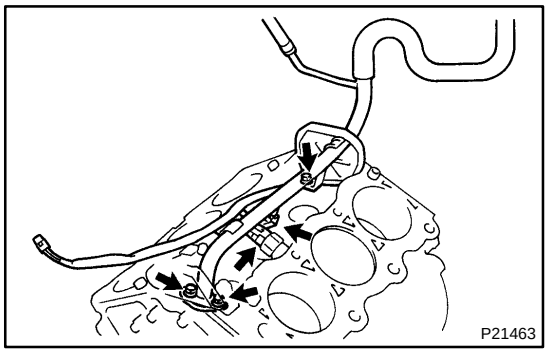

7. **REMOVE WATER BYPASS PIPE WITH KNOCK SENSOR WIRE**

(a) Disconnect the 2 knock sensor connectors.
(b) Remove the 2 bolts, nut and water bypass pipe with the knock sensor wire.

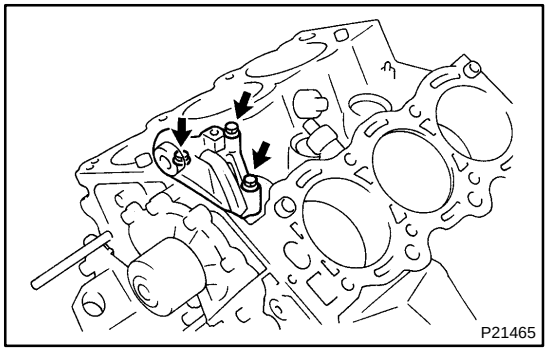

8. **REMOVE NO.2 IDLER PULLEY BRACKET**

Remove the 3 bolts and idler pulley bracket.

9. **REMOVE KNOCK SENSORS (See page SF–58)**
10. **REMOVE WATER PUMP (See page CO–6)**
11. **REMOVE GENERATOR ADJUSTING BAR**
12. **REMOVE OIL PRESSURE SWITCH**

Using SST, remove the oil pressure switch.

SST 09816–30010

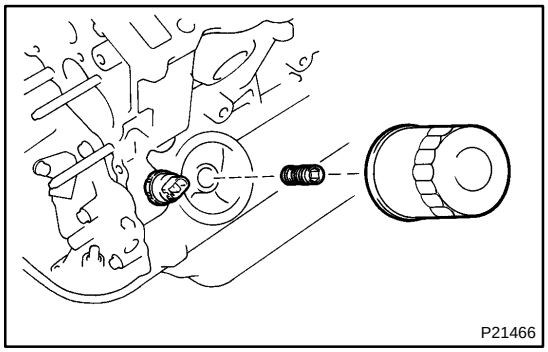

13. **REMOVE OIL FILTER (See page LU–2)**
14. **REMOVE OIL FILTER UNION**

Using a 12 mm hexagon wrench, remove the union.

15. **REMOVE RH AND LH ENGINE MOUNTING BRACKETS**
16. **REMOVE COOLANT DRAIN COCK**
17. **w/ Oil Cooler:**
    REMOVE OIL COOLER (See page LU–18)
18. **REMOVE OIL PUMP (See page LU–8)**

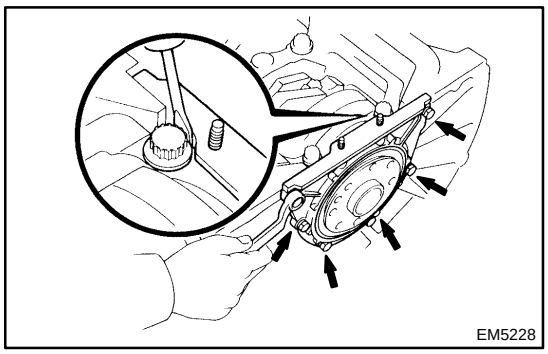

19. REMOVE REAR OIL SEAL RETAINER

(a) Remove the 6 bolts and retainer.

(b) Using a screwdriver, remove the oil seal retainer by plying the portions between the oil seal retainer and main bearing cap.

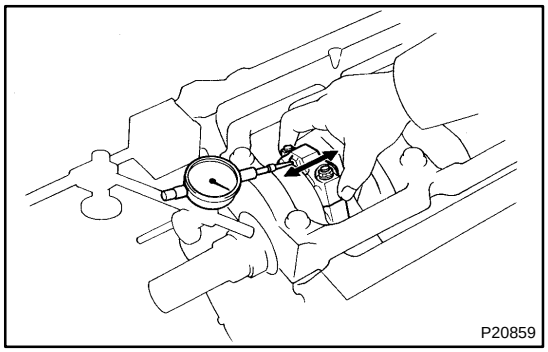

20. CHECK CONNECTING ROD THRUST CLEARANCE

Using a dial indicator, measure the thrust clearance while moving the connecting rod back and forth.

Standard thrust clearance:
0.150 – 0.330 mm (0.0059 – 0.0130 in.)
Maximum thrust clearance: 0.380 mm (0.0150 in.)

If the thrust clearance is greater than maximum, replace the connecting rod assembly.

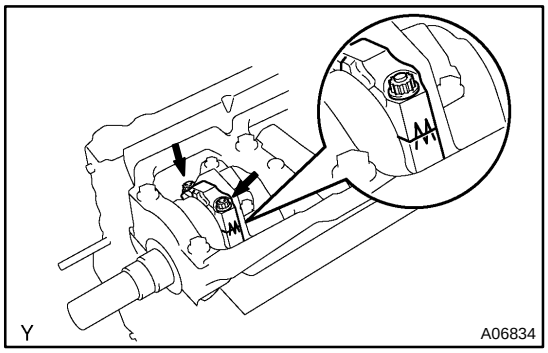

21. REMOVE CONNECTING ROD CAPS AND CHECK OIL CLEARANCE

(a) Check the matchmarks on the connecting rod and cap are aligned to ensure correct order.

(b) Remove the 2 connecting rod cap nuts.

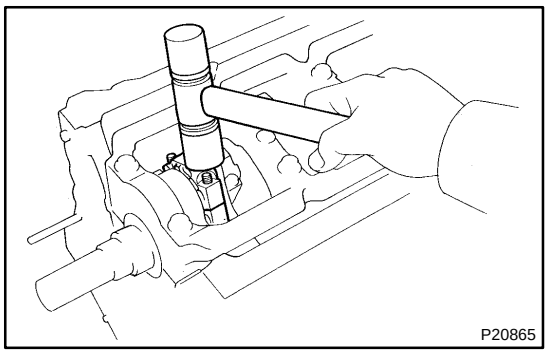

(c) Using a plastic–faced hammer, lightly tap the connecting rod bolts and lift off the connecting rod cap.

HINT:

Keep the lower bearing inserted with the connecting rod cap.

(d) Cover the connecting rod bolts with a short piece of hose to protect the crankshaft from damage.

(e) Clean the crank pin and bearing.

(f) Check the crank pin and bearing for pitting and scratches.

If the crank pin or bearing is damaged, replace the bearings.

If necessary, grind or replace the crankshaft.

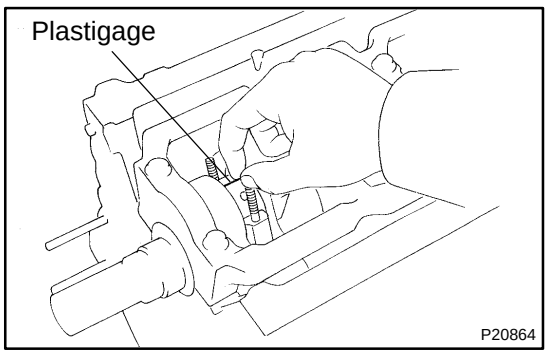

(g) Lay a strip of Plastigage across the crank pin.

(h) Install the connecting rod cap with the 2 nuts (See page EM–98).

NOTICE:

Do not turn the crankshaft.

(i) Remove the 2 nuts and connecting rod cap (See step (b) and (c) above).

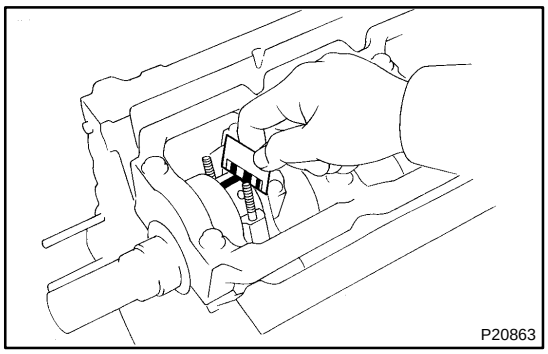

(j) Measure the Plastigauge at its widest point.

Standard oil clearance:

STD	0.024 – 0.053 mm (0.0009 – 0.0021 in.)
U/S 0.25	0.023 – 0.069 mm (0.0009 – 0.0027 in.)

Maximum oil clearance: 0.08 mm (0.0031 in.)

If the oil clearance is greater than maximum, replace the bearings.

If necessary, grind or replace the crankshaft.

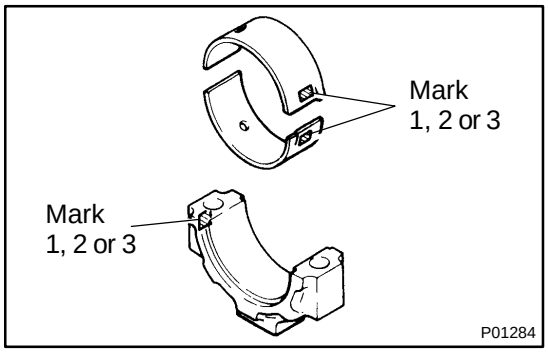

HINT:

If using a standard bearing, replace with one having the same number marked on the connecting rod cap. There are 3 sizes of standard bearings, marked ”1”, ”2” and ”3” accordingly.

Reference

Standard bearing center wall thickness:

Mark ”1”	1.484 – 1.488 mm (0.0584 – 0.0586 in.)
Mark ”2”	1.488 – 1.492 mm (0.0586 – 0.0587 in.)
Mark ”3”	1.492 – 1.496 mm (0.0587 – 0.0589 in.)

(k) Completely remove the Plastigauge.

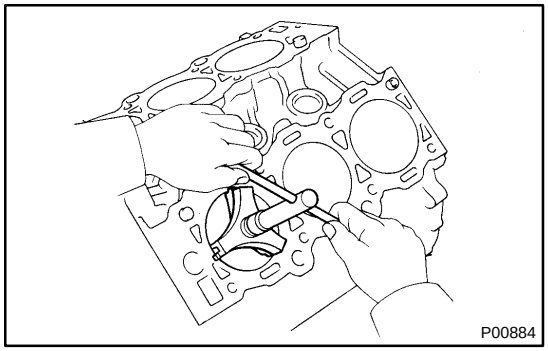

22. REMOVE PISTON AND CONNECTING ROD ASSEMBLIES

(a) Using a ridge reamer, remove the all carbon from the top of the cylinder.

(b) Cover the connecting rod bolts with a short piece of hose to protect the crankshaft from damage.

(c) Push the piston, connecting rod assembly and upper bearing through the top of the cylinder block.

HINT:

- Keep the bearings, connecting rod and cap together.
- Arrange the piston and connecting rod assemblies in correct order.

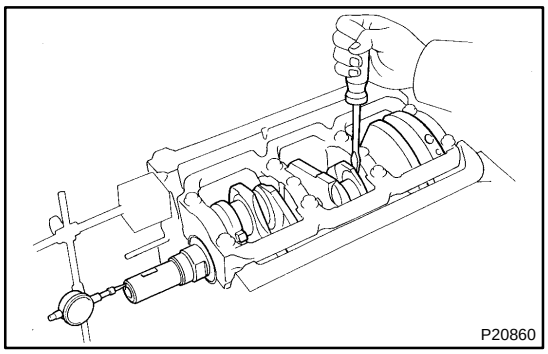

23. CHECK CRANKSHAFT THRUST CLEARANCE

Using a dial indicator, measure the thrust clearance while prying the crankshaft back and forth with a screwdriver.

Standard thrust clearance:
0.020 – 0.220 mm (0.0008 – 0.0087 in.)
Maximum thrust clearance: 0.300 mm (0.0118 in.)

If the thrust clearance is greater than maximum, replace the thrust washers as a set.

Thrust washer thickness:
2.440 – 2.490 mm (0.0961 – 0.0980 in.)

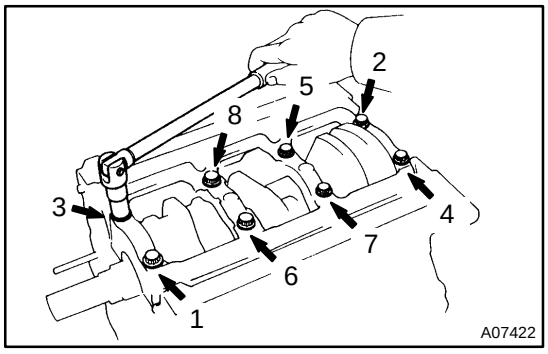

24. REMOVE MAIN BEARING CAP AND CHECK OIL CLEARANCE

(a) Uniformly loosen and remove the main bearing cap bolts, in several passes, in the sequence shown.

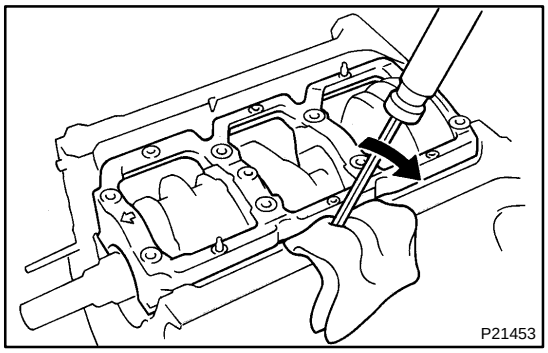

(b) Using a screwdriver, pry out the main bearing cap and remove the main bearing cap, lower main bearings and lower thrust washers (No.2 journal position of main bearing cap only).

HINT:
Keep the lower main bearings and lower thrust washers together with the main bearing cap.

(c) Lift out the crankshaft.

HINT:
Keep the upper main bearings and upper thrust washers together with the cylinder block.

(d) Clean each main journal and bearing.

(e) Check each main journal and bearing for pitting and scratches.

If the journal or bearing is damaged, replace the bearings. If necessary, grind or replace the crankshaft.

(f) Place the crankshaft on the cylinder block.

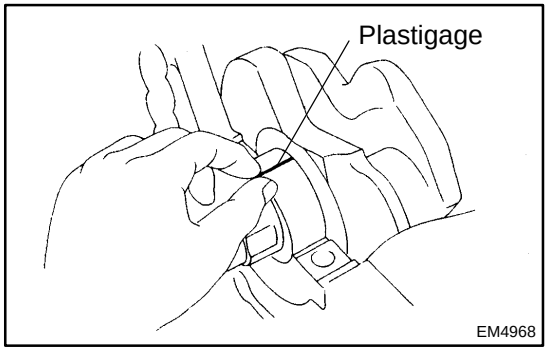

(g) Lay a strip of Plastigage across each journal.

(h) Install the main bearing cap with the 8 bolts (See page EM–98).

NOTICE:
Do not turn the crankshaft.

(i) Remove the 8 bolts and main bearing cap (See step (a) and (b) above).

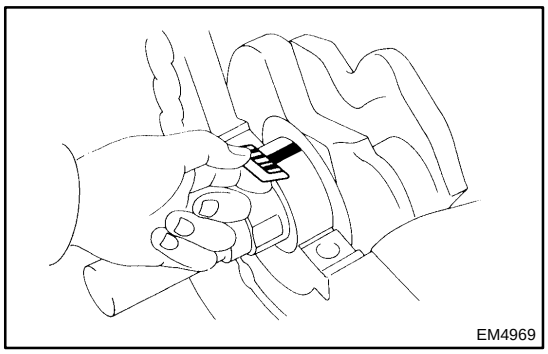
EM4969

(j) Measure the Plastigauge at its widest point.

Standard clearance:

No.1	STD	0.020 – 0.038 mm (0.0008 – 0.0015 in.)
	U/S 0.25	0.019 – 0.059 mm (0.0007 – 0.0023 in.)
Others	STD	0.024 – 0.042 mm (0.0009 – 0.0017 in.)
	U/S 0.25	0.023 – 0.063 mm (0.0009 – 0.0025 in.)

Maximum clearance: 0.08 mm (0.0031 in.)

HINT:

If replacing the cylinder block subassembly, the bearing standard clearance will be:

No.1	0.010 – 0.049 mm (0.0004 – 0.0020 in.)
Others	0.014 – 0.053 mm (0.0006 – 0.0021 in.)

If the oil clearance is greater than maximum, replace the bearings.

If necessary, grind or replace the crankshaft.

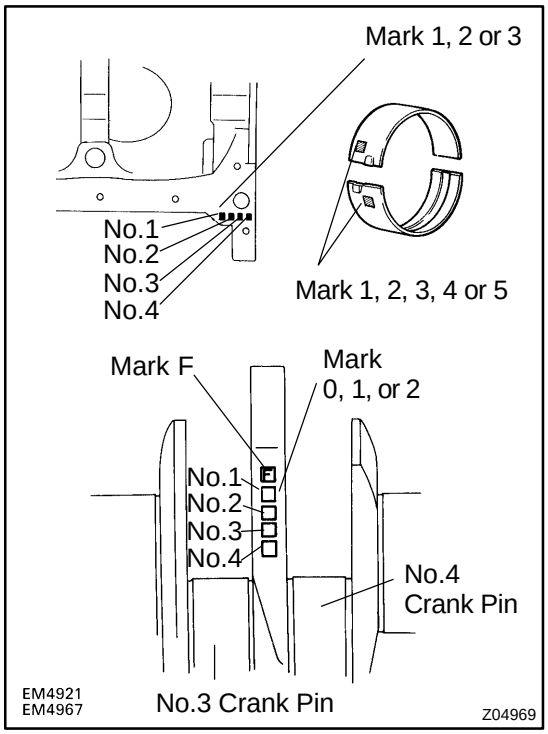

EM4921
EM4967
Z04969

HINT:

If using a standard bearing, replace with one having the same number. If the number of the bearing cannot be determined, select the correct bearing by adding together the numbers imprinted on the cylinder block and crankshaft, then selecting the bearing with the same number as the total. There are 5 sizes of standard bearings, marked ”1”, ”2”, ”3”, ”4” and ”5” accordingly.

	Number marked								
Cylinder block	1			2			3		
Crankshaft	0	1	2	0	1	2	0	1	2
Use bearing	1	2	3	2	3	4	3	4	5

EXAMPLE: Cylinder block ”2” + Crankshaft ”1”
= Total number 3 (Use bearing ”3”)

Reference

Standard sized bearing center wall thickness:

No.1	Mark ”1”	1.991 – 1.994 mm (0.0784 – 0.0785 in.)
	Mark ”2”	1.994 – 1.997 mm (0.0785 – 0.0786 in.)
	Mark ”3”	1.997 – 2.000 mm (0.0786 – 0.0787 in.)
	Mark ”4”	2.000 – 2.003 mm (0.0787 – 0.0789 in.)
	Mark ”5”	2.003 – 2.006 mm (0.0789 – 0.0790 in.)
Others	Mark ”1”	1.989 – 1.992 mm (0.0783 – 0.0784 in.)
	Mark ”2”	1.992 – 1.995 mm (0.0784 – 0.0785 in.)
	Mark ”3”	1.995 – 1.998 mm (0.0785 – 0.0787 in.)
	Mark ”4”	1.998 – 2.001 mm (0.0787 – 0.0788 in.)
	Mark ”5”	2.001 – 2.004 mm (0.0788 – 0.0789 in.)

Cylinder block main journal bore diameter:

Mark ”1”	68.010 – 68.016 mm (2.6776 – 2.6778 in.)
Mark ”2”	68.016 – 68.022 mm (2.6778 – 2.6780 in.)
Mark ”3”	68.022 – 68.028 mm (2.6780 – 2.6783 in.)

Crankshaft main journal diameter:

Mark ”0”	63.996 – 64.000 mm (2.5195 – 2.5197 in.)
Mark ”1”	63.990 – 63.996 mm (2.5193 – 2.5195 in.)
Mark ”2”	63.985 – 63.990 mm (2.5191 – 2.5193 in.)

(k) Completely remove the Plastigauge.

25. REMOVE CRANKSHAFT

(a) Lift out the crankshaft.

(b) Remove the upper main bearings and upper thrust washers from the cylinder block.

HINT:

Arrange the main bearings and thrust washers in correct order.

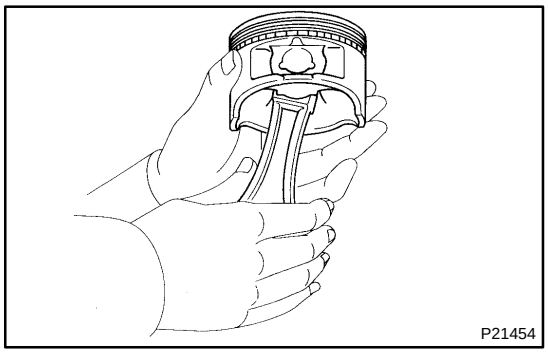
P21454

26. CHECK FIT BETWEEN PISTON AND PISTON PIN

Try to move the piston back and forth on the piston pin.

If any movement is felt, replace the piston and pin as a set.

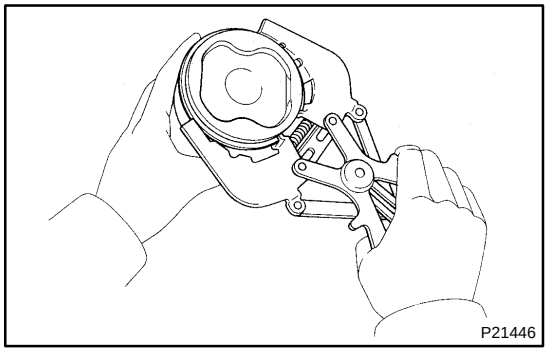
P21446

27. REMOVE PISTON RINGS

(a) Using a piston ring expander, remove the 2 compression rings.

(b) Remove the 2 side rails and oil ring by hand.

HINT:

Arrange the piston rings in the correct order only.

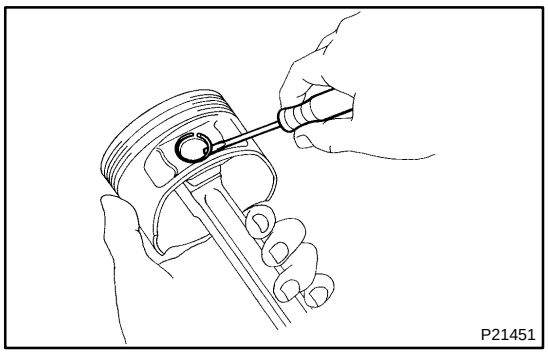

28. DISCONNECT CONNECTING ROD FROM PISTON

(a) Using a small screwdriver, pry out the 2 snap rings.

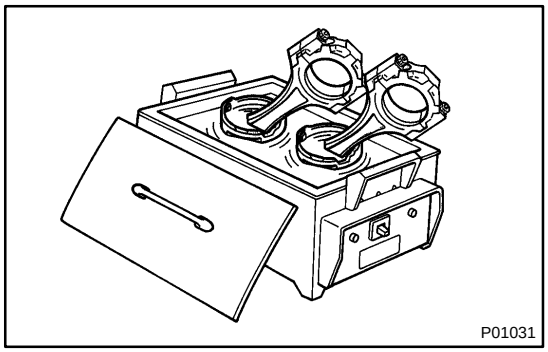

(b) Gradually heat the piston to about 60˚C (140˚F).

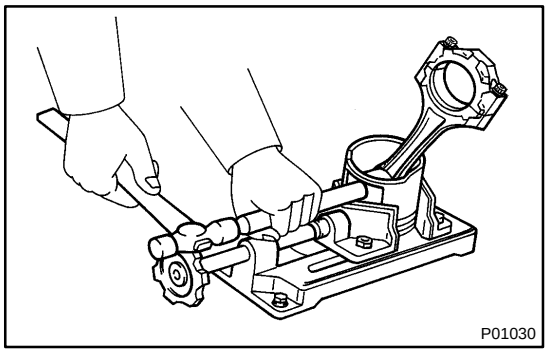

(c) Using a plastic–faced hammer and brass bar, lightly tap out the piston pin and remove the connecting rod.

HINT:

- The piston and pin are a matched set.
- Arrange the pistons, pins, rings, connecting rods and bearings in the correct order.

EM105–03

INSPECTION

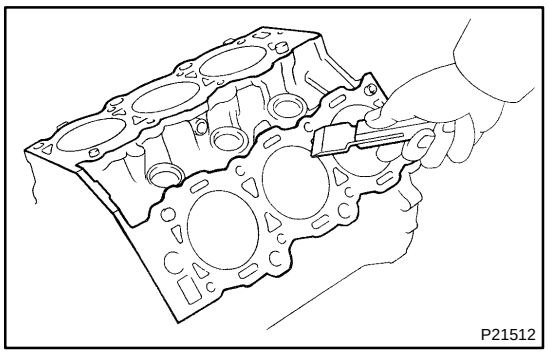

1. CLEAN CYLINDER BLOCK

(a) Remove the gasket material.
Using a gasket scraper, remove all the gasket material from the top surface of the cylinder block.

(b) Clean the cylinder block.
Using a soft brush and solvent, thoroughly clean the cylinder block.

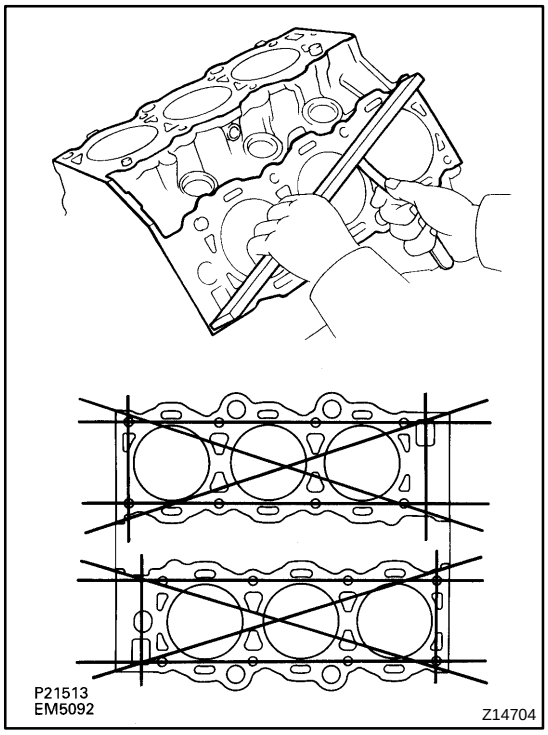

2. INSPECT CYLINDER BLOCK

(a) Inspect for flatness.
Using a precision straight edge and feeler gauge, measure the surfaces contacting the cylinder head gasket for warpage.
Maximum warpage: 0.05 mm (0.0020 in.)

If warpage is greater than maximum, replace the cylinder block.

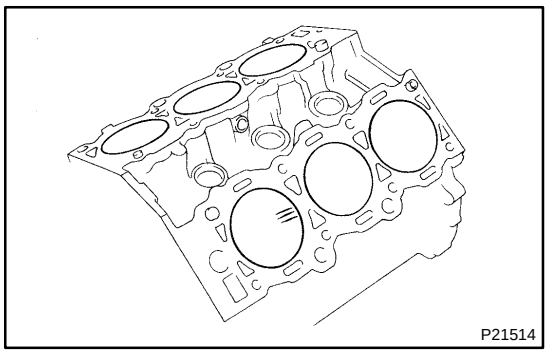

(b) Visually check the cylinder for vertical scratches.

If deep scratches are present, rebore all the 6 cylinders.
If necessary, replace the cylinder block.

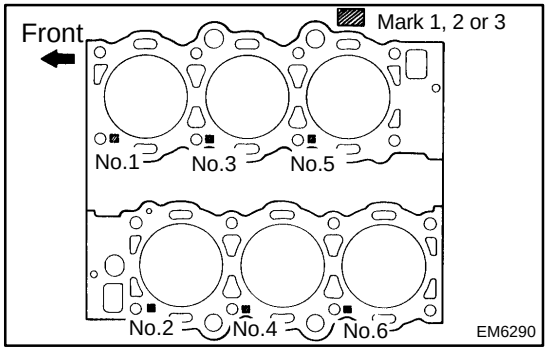

(c) Inspect the cylinder bore diameter.

HINT:
There are 3 sizes of the standard cylinder bore diameter, marked ”1”, ”2” and ”3” accordingly. The mark is stamped on the top of the cylinder block.

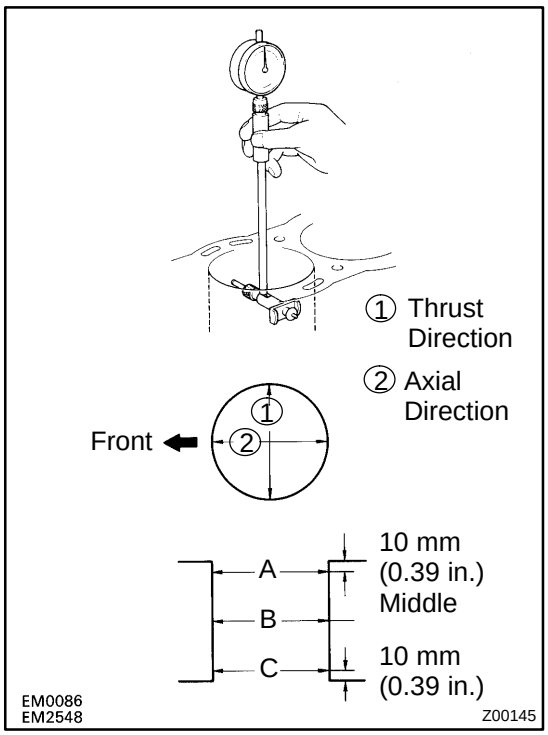

Using a cylinder gauge, measure the cylinder bore diameter at positions A, B and C in the thrust and axial directions.

Standard diameter:

Mark ”1”	93.500 – 93.510 mm (3.6811 – 3.6815 in.)
Mark ”2”	93.510 – 93.520 mm (3.6815 – 3.6819 in.)
Mark ”3”	93.520 – 93.530 mm (3.6819 – 3.6823 in.)

Maximum diameter:

STD	93.730 mm (3.6902 in.)
O/S 0.50	94.230 mm (3.7098 in.)

If the diameter is greater than maximum, rebore all the 6 cylinders, If necessary, replace the cylinder block.

3. REMOVE CYLINDER RIDGE

If the wear is less than 0.2 mm (0.008 in.), using a ridge reamer, grind the top of the cylinder.

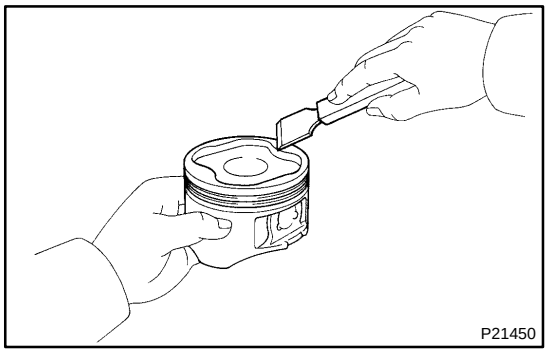

4. CLEAN PISTON

(a) Using a gasket scraper, remove the carbon from the piston top.

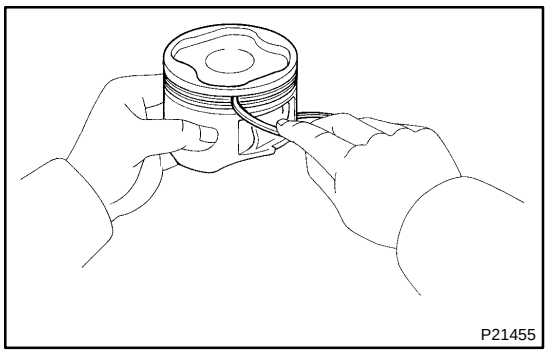

(b) Using a groove cleaning tool or broken ring, clean the piston ring grooves.

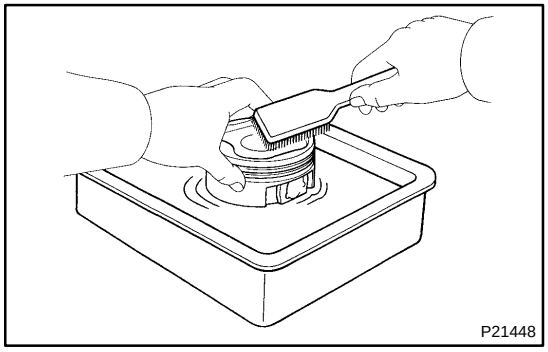

(c) Using solvent and a brush, thoroughly clean the piston.

NOTICE:

Do not use a wire brush.

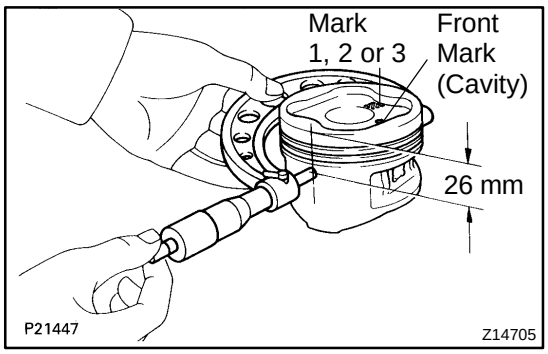

5. INSPECT PISTON AND CONNECTING ROD

(a) Inspect the piston oil clearance.

HINT:

There are 3 sizes of the standard piston diameter, marked ”1”, ”2” and ”3” accordingly. The mark is stamped on the piston top.

(1) Using a micrometer, measure the piston diameter at right angles to the piston pin center line, 26 mm (1.02 in.) from the piston head.

Piston diameter:

STD	Mark ”1”	93.356 – 93.366 mm (3.6754 – 3.6758 in.)
	Mark ”2”	93.367 – 93.376 mm (3.6759 – 3.6762 in.)
	Mark ”3”	93.377 – 93.386 mm (3.6763 – 3.6766 in.)
O/S 0.50		93.856 – 93.886 mm (3.6951 – 3.6963 in.)

(2) Measure the cylinder bore diameter in the thrust directions (See step 2).

(3) Subtract the piston diameter measurement from the cylinder bore diameter measurement.

Standard oil clearance:

0.134 – 0.154 mm (0.0053 – 0.0060 in.)

Maximum oil clearance: 0.174 mm (0.0069 in.)

If the oil clearance is greater than maximum, replace all the 6 pistons. If necessary, rebore all the 6 cylinders or replace the cylinder block.

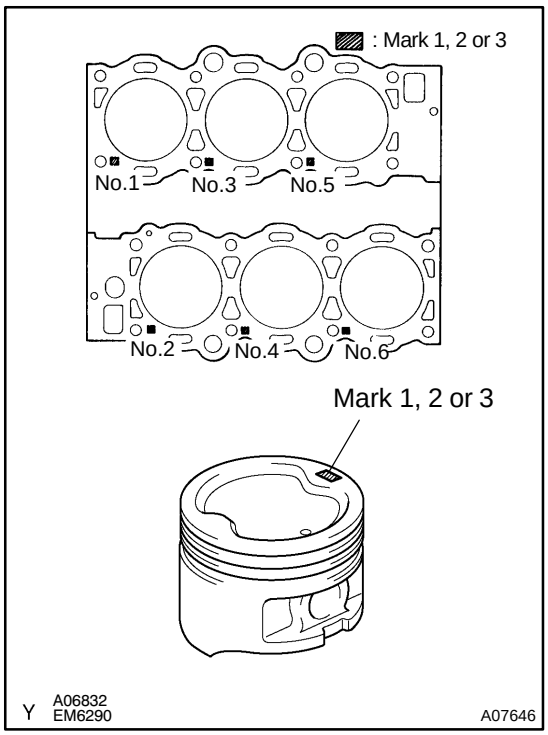

HINT:

Use new cylinder block:

Use a piston with the same number mark as the standard bore diameter marked on the cylinder block.

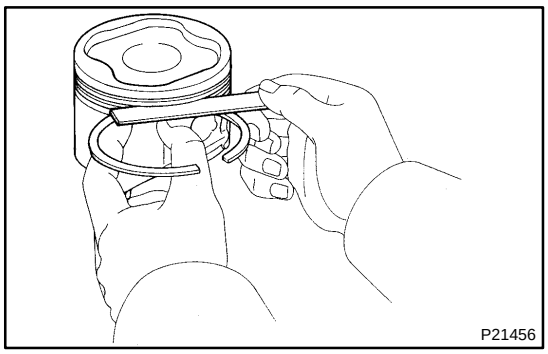

(b) Inspect the piston ring groove clearance.
Using a feeler gauge, measure the clearance between new piston ring and the wall of the piston ring groove.
Standard ring groove clearance:

No.1	0.040 – 0.080 mm (0.0016 – 0.0031 in.)
No.2	0.030 – 0.070 mm (0.0012 – 0.0028 in.)

If the clearance is not as specified, replace the piston.

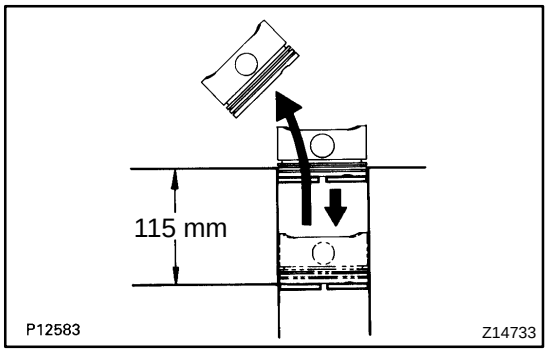

(c) Inspect the piston ring end gap.
(1) Insert the piston ring into the cylinder bore.
(2) Using a piston, push the piston ring a little beyond the bottom of the ring travel, 115 mm (4.53 in.) from the top of the cylinder block.

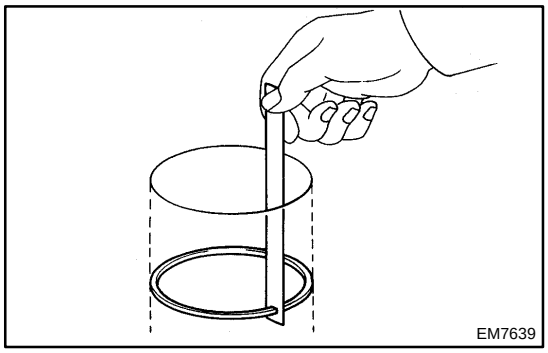

(3) Using a feeler gauge, measure the ring end gap.
Standard end gap:

No.1	0.300 – 0.500 mm (0.0118 – 0.0197 in.)
No.2	0.400 – 0.600 mm (0.0157 – 0.0236 in.)
Oil (Side rail)	0.150 – 0.550 mm (0.0059 – 0.0217 in.)

Maximum end gap:

No.1	1.10 mm (0.0433 in.)
No.2	1.20 mm (0.0472 in.)
Oil (Side rail)	1.15 mm (0.0453 in.)

If the end gap is greater than maximum, replace the piston ring.
If the end gap is greater than maximum, even with a new piston ring, rebore all the 6 cylinders or replace the cylinder block.

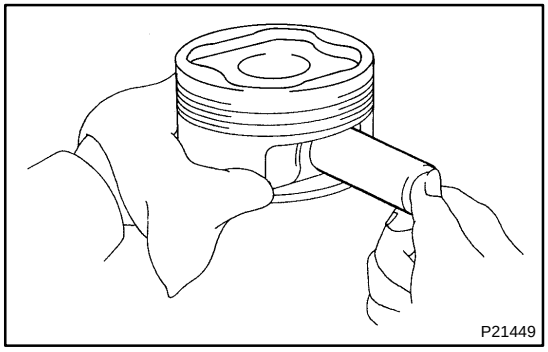

(d) Inspect the piston pin fit.
At 60˚C (140˚F), you should be able to push the piston pin into the piston pin hole with your thumb.

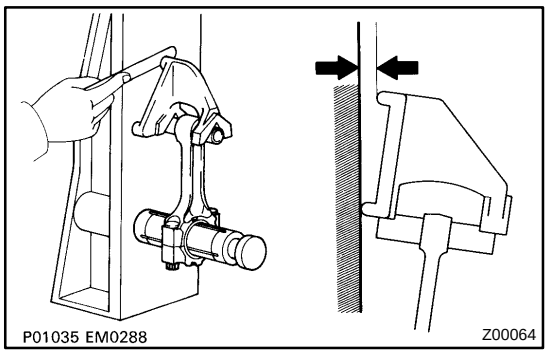

(e) Using a rod aligner and feeler gauge, check the connecting rod alignment.

(1) Check for bend.

Maximum bend:

0.05 mm (0.0020 in.) per 100 mm (3.94 in.)

If bend is greater than maximum, replace the connecting rod assembly.

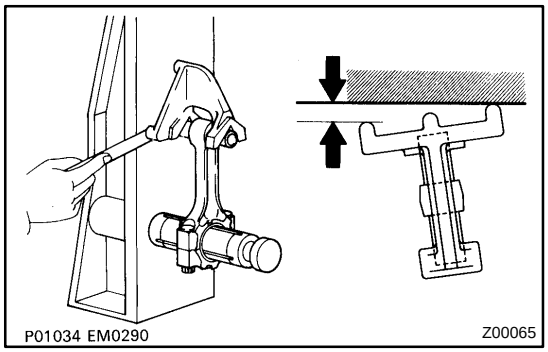

(2) Check for twist.

Maximum twist:

0.15 mm (0.0059 in.) per 100 mm (3.94 in.)

If twist is greater than maximum, replace the connecting rod assembly.

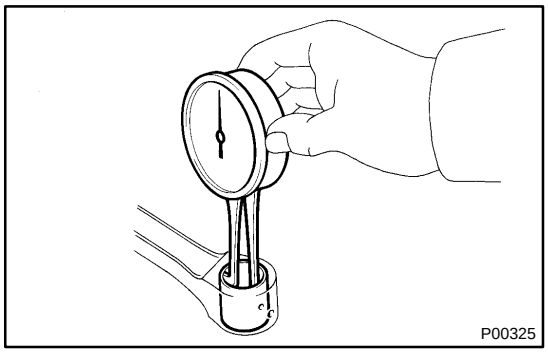

(f) Inspect the piston pin oil clearance.

(1) Using a caliper gauge, measure the inside diameter of the connecting rod bushing.

Bushing inside diameter:

22.005 – 22.017 mm (0.8663 – 0.8668 in.)

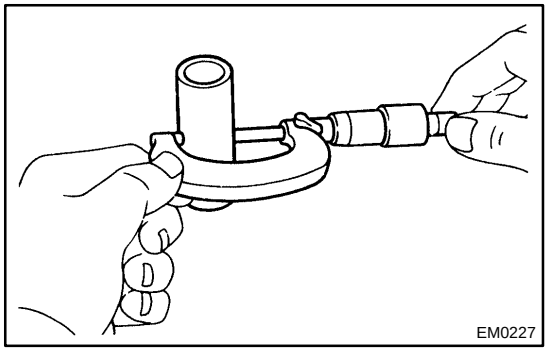

(2) Using a micrometer, measure the pin diameter.

Piston pin diameter:

21.997 – 22.009 mm (0.8660 – 0.8665 in.)

(3) Subtract the piston pin diameter measurement from the bushing inside diameter measurement.

Standard oil clearance:

0.005 – 0.011 mm (0.0002 – 0.0004 in.)

Maximum oil clearance: 0.05 mm (0.0020 in.)

If the oil clearance is greater than maximum, replace the bushing (See page EM–95).

If necessary, replace the piston and piston pin as a set.

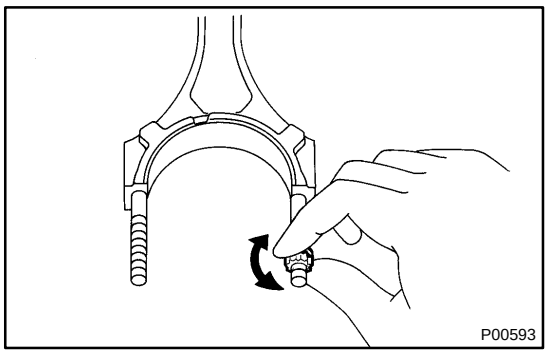

(g) Inspect the connecting rod bolts.

(1) Install the cap nut to the connecting rod bolt. Check that the rod cap nut can be turned easily by hand to the end of the thread.

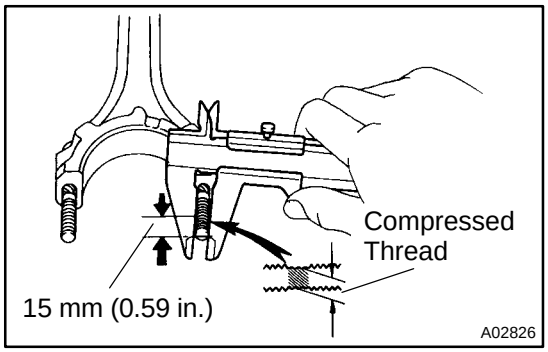

(2) If the cap nut cannot be turned easily, measure the outer diameter of the compressed thread with a vernier caliper.

Standard outer diameter:
7.860 – 8.000 mm (0.3094 – 0.3150 in.)
Minimum outer diameter: 7.600 mm (0.2992 in.)

HINT:
If the location of this area cannot be judged by visual inspection, measure the outer diameter at the location shown in the illustration.
If the outer diameter is less than minimum, replace the connecting rod and rod cap nut as a set.

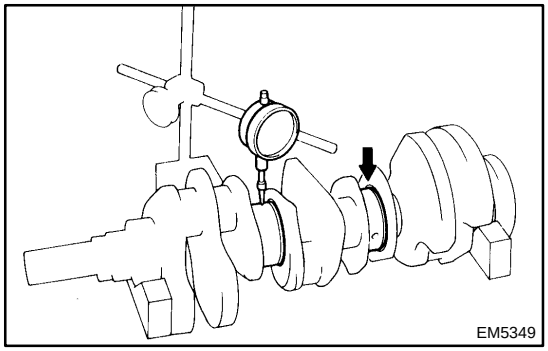

6. INSPECT CRANKSHAFT

(a) Inspect for circle runout.

(1) Place the crankshaft on V–blocks.

(2) Using a dial indicator, measure the circle runout at the No.2 and No.3 journals.

Maximum circle runout: 0.06 mm (0.0024 in.)

If the circle runout is greater than maximum, replace the crankshaft.

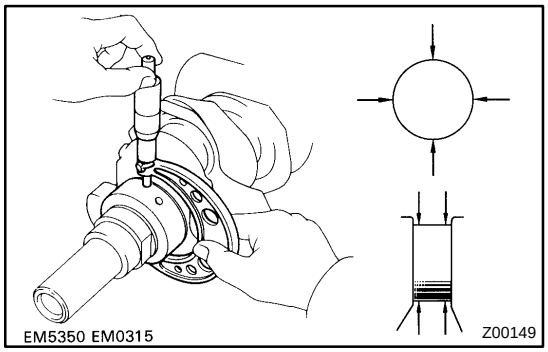

(b) Inspect the main journals and crank pins.

(1) Using a micrometer, measure the diameter of each main journal and crank pin.

Main journal diameter:

STD	63.985 – 64.000 mm (2.5191 – 2.5197 in.)
U/S 0.25	63.745 – 63.755 mm (2.5096 – 2.5100 in.)

Crank pin diameter:

STD	54.987 – 55.000 mm (2.1648 – 2.1654 in.)
U/S 0.25	54.745 – 54.755 mm (2.1553 – 2.1557in.)

If the diameter is not as specified, check the oil clearance (See page EM–81).

(2) Check each main journal and crank pin for taper and out–of–round as shown.

Maximum taper and out–of–round:
0.02 mm (0.0008 in.)

If the taper or out–of–round is greater than maximum, grind or replace the crankshaft.

7. IF NECESSARY, GRIND AND HONE MAIN JOURNALS AND/OR CRANK PINS

(a) Grind and hone the main journals and/or crank pins to the finished undersized diameter (See procedure step 6).

(b) Install new main journal and/or crank pin undersized bearings.

EM020–12

REASSEMBLY

HINT:

- Thoroughly clean all parts to be assembled.
- Before installing the parts, apply new engine oil to all sliding and rotating surfaces.
- Replace all gaskets, O–rings and oil seals with new parts.

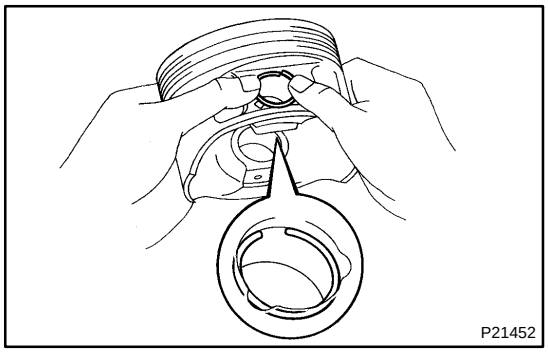

1. ASSEMBLE PISTON AND CONNECTING ROD

(a) Using a small screwdriver, install a new snap ring at one end of the piston pin hole.

HINT:

Be sure that end gap of the snap ring is not aligned with the pin hole cutout portion of the piston.

(b) Gradually heat the piston to about 60°C (140°F).

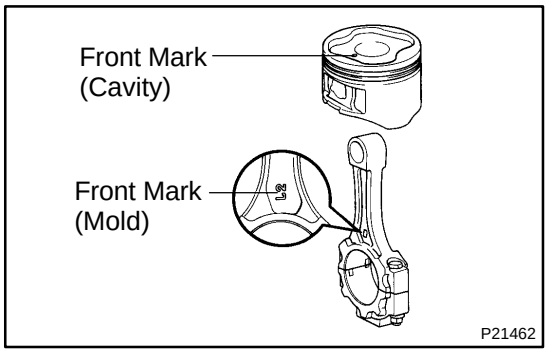

(c) Coat the piston pin with engine oil.

(d) Align the front marks of the piston and connecting rod, and push in the piston pin with your thumb.

(e) Using a small screwdriver, install a new snap ring on the other end of the piston pin hole.

HINT:

Be sure that end gap of the snap ring is not aligned with the pin hole cutout portion of the piston.

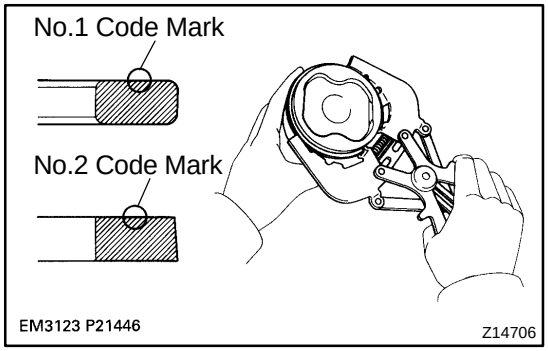

2. INSTALL PISTON RINGS

(a) Install the oil ring expander and 2 side rails by hand.

(b) Using a piston ring expander, install the 2 compression rings with the code mark facing upward.

Code mark:

No.1	1R or T
No.2	2R or T

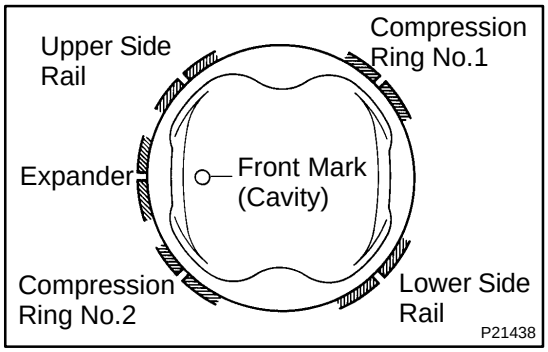

(c) Position the piston rings so that the ring ends are as shown.

NOTICE:

Do not align the ring ends.

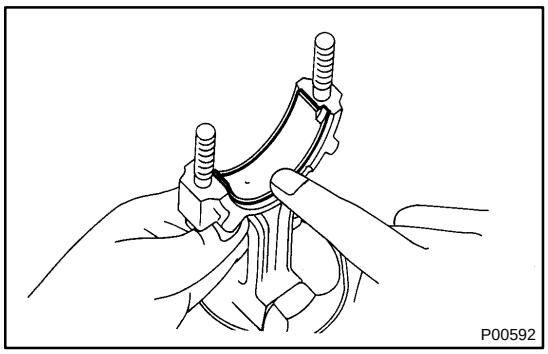

3. INSTALL BEARINGS

(a) Align the bearing claw with the groove of the connecting rod or connecting cap.

(b) Install the bearings in the connecting rod and connecting rod cap.

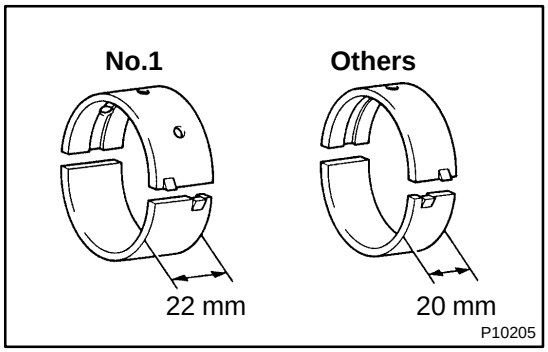

4. INSTALL MAIN BEARINGS

HINT:

- Main bearings come in widths of 20 mm (0.79 in.) and 22 mm (0.87 in.). Install the 22 mm (0.87 in.) bearings in the No.1 cylinder block journal position with the main bearing caps. Install the 20 mm (0.79 in.) bearings in the other positions.
- Upper bearings have an oil holes; lower bearings do not.

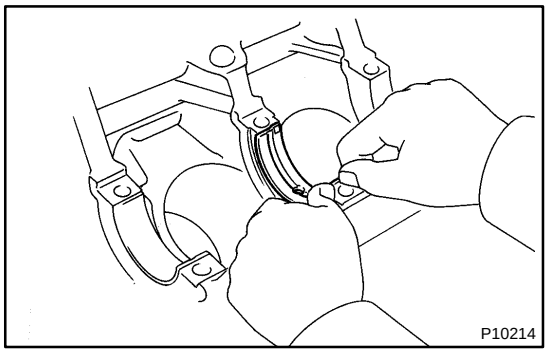

(a) Align the bearing claw with the claw groove of the main bearing cap or cylinder block.

(b) Install the bearings in the cylinder block and main bearing cap.

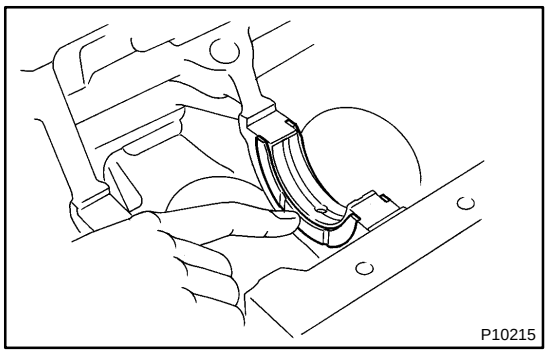

5. INSTALL UPPER THRUST WASHERS

Install the thrust washers under the No.2 journal position of the cylinder block with the oil grooves facing outward.

6. PLACE CRANKSHAFT ON CYLINDER BLOCK

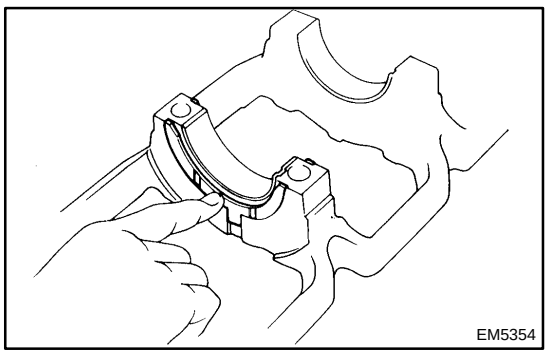

7. PLACE MAIN BEARING CAP AND LOWER THRUST WASHERS ON CYLINDER BLOCK

(a) Install the thrust washers on the No.2 journal position of the bearing cap with the grooves facing outward.

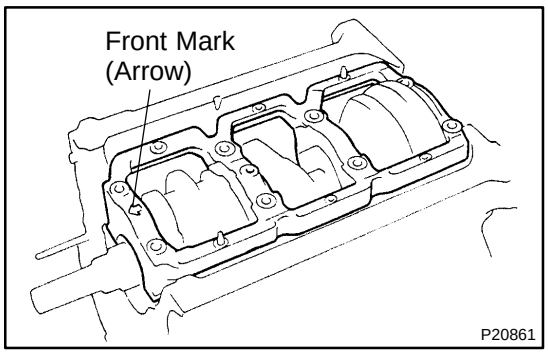

(b) Install the main bearing cap with the front mark facing forward.

8. INSTALL MAIN BEARING CAP BOLTS

HINT:

- The main bearing cap bolts are tightened in 2 progressive steps (steps (b) and (d)).
- If any main bearing cap bolt is broken or deformed, replace it.

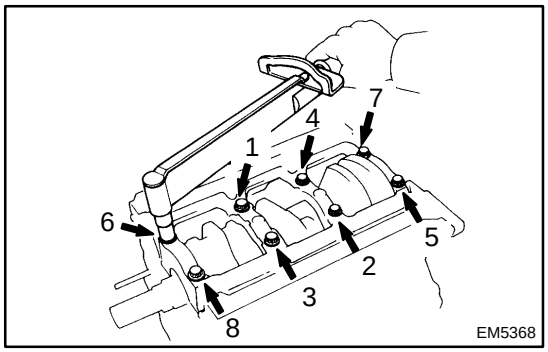

(a) Apply a light coat of engine oil on the threads and under the heads of the main bearing cap bolts.

(b) Install and uniformly tighten the 8 main bearing cap bolts in several passes, in the sequence shown.

Torque: 61 N·m (625 kgf·cm, 45 ft·lbf)

If any one of the main bearing cap bolts does not meet the torque specification, replace the cap bolt.

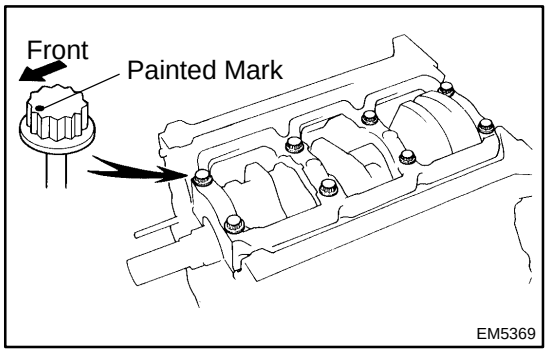

(c) Mark the front of the main bearing cap bolt with paint.

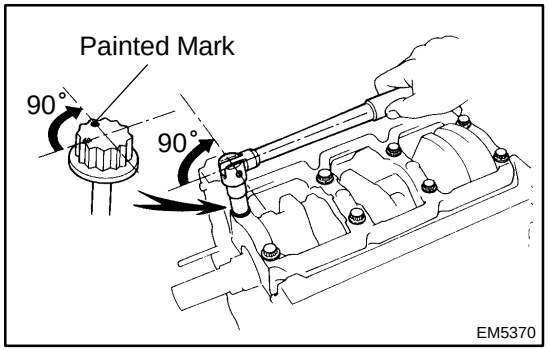

(d) Retighten the main bearing cap bolts by 90° in the numerical order shown.

(e) Check that the painted mark is now at a 90° angle to the front.

(f) Check that the crankshaft turns smoothly.

(g) Check the crankshaft thrust clearance. (See page EM–81)

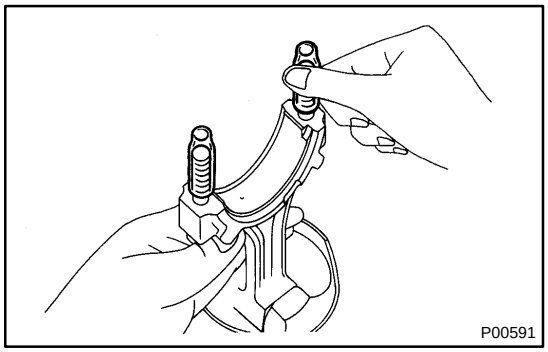

9. INSTALL PISTON AND CONNECTING ROD ASSEMBLIES

(a) Cover the connecting rod bolts with a short piece of hose to protect the crankshaft from damage.

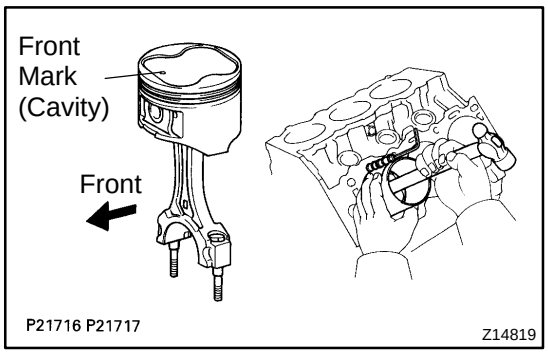

(b) Using a piston ring compressor, push the correctly numbered piston and connecting rod assemblies into each cylinder with the front mark of the piston facing forward.

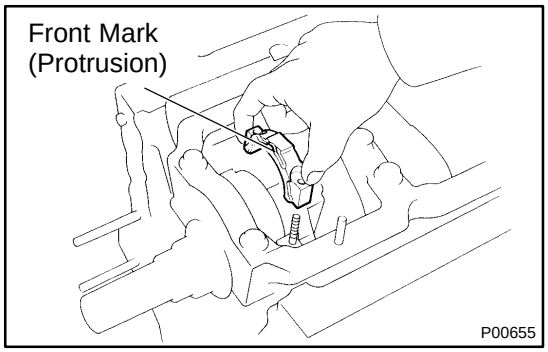

10. PLACE CONNECTING ROD CAP ON CONNECTING ROD

(a) Match the numbered connecting rod cap with the connecting rod.

(b) Install the connecting rod cap with the front mark facing forward.

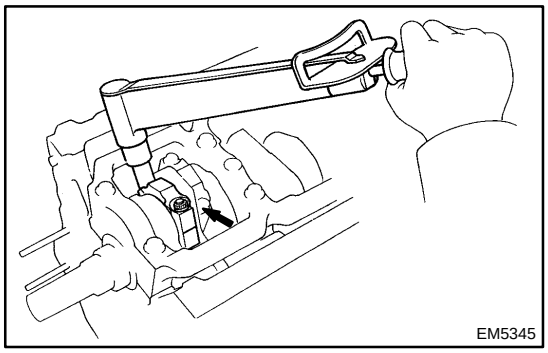

11. INSTALL CONNECTING ROD CAP NUTS

HINT:

- The connecting rod cap nuts are tightened in 2 progressive steps (steps (b) and (d)).
- If any connecting rod bolt is broken or deformed, replace it.

(a) Apply a light of engine oil on the threads and under the nuts of the connecting rod cap.

(b) Install and alternately tighten the nuts of the connecting rod cap in several passes.

Torque: 25 N·m (250 kgf·cm, 18 ft·lbf)

If any one of the connecting rod cap nuts does not meet the torque specification, replace the cap nut.

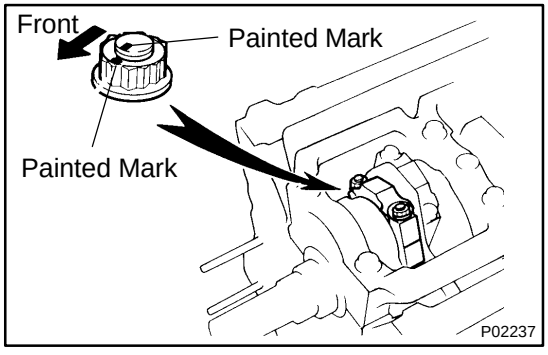

(c) Mark the front of the connecting rod cap nut and bolt with paint.

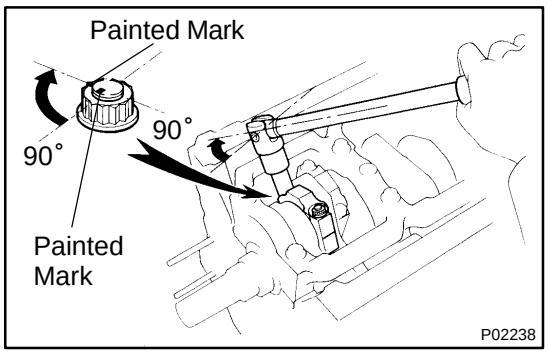

(d) Retighten the connecting rod cap nuts 90° as shown.
(e) Check that the painted mark is now at a 90° angle to the front.
(f) Check that the crankshaft turns smoothly.
(g) Check the connecting rod thrust clearance (See page EM–81).

12. INSTALL REAR OIL SEAL RETAINER

(a) Remove any old packing (FIPG) material and be careful not to drop any oil on the contact surfaces of the retainer and cylinder block.
- Using a razor blade and gasket scraper, remove all the old packing (FIPG) material from the gasket surfaces and sealing groove.
- Thoroughly clean all components to remove all the loose material.
- Using a non–residue solvent, clean both sealing surfaces.

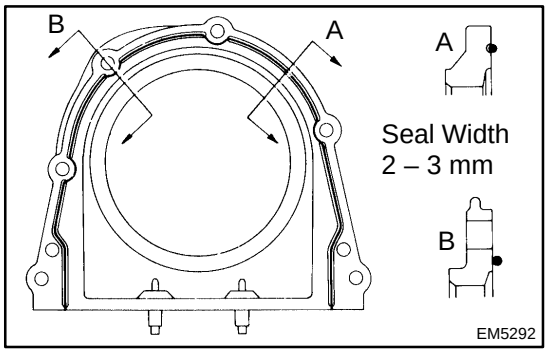

(b) Apply seal packing to the oil seal retainer as shown in the illustration.
Seal packing: Part No.08826–00080 or equivalent
- Install a nozzle that has been cut to a 2 – 3 mm (0.08 – 0.12 in.) opening.
- Parts must be assembled within 5 minutes of application. Otherwise the material must be removed and reapplied.
- Immediately remove nozzle from the tube and reinstall cap.

(c) Install the oil seal retainer with the 6 bolts.
Torque: 8 N·m (80 kgf·cm, 71 in.·lbf)

13. INSTALL OIL PUMP (See page LU–14)

14. w/Oil Cooler:
INSTALL OIL COOLER (See page LU–20)

15. INSTALL COOLANT DRAIN COCK
Torque: 39 N·m (400 kgf·cm, 29 ft·lbf)

16. INSTALL RH AND LH ENGINE MOUNTING BRACKETS
Torque: 44 N·m (440 kgf·cm, 32 ft·lbf)

17. INSTALL OIL FILTER UNION
Torque: 25 N·m (250 kgf·cm, 18 ft·lbf)

18. INSTALL OIL FILTER (See page LU–2)

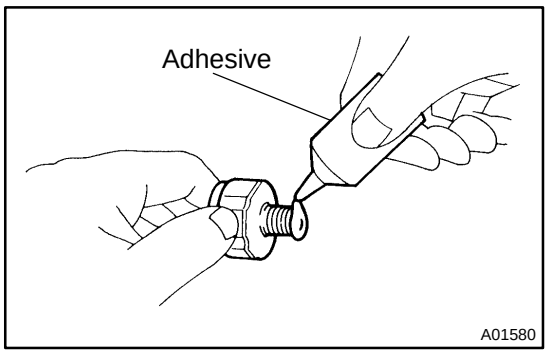

19. INSTALL OIL PRESSURE SWITCH

(a) Apply adhesive to 2 or 3 threads of the oil pressure switch.
Adhesive:
Part No. 08833–00080, THREE BOND 1344, LOCTITE 242 or equivalent

(b) Using SST, install the oil pressure switch.
SST 09816–30010
Torque: 15 N·m (150 kgf·cm, 11 ft·lbf)

20. INSTALL GENERATOR ADJUSTING BAR
Torque: 42 N·m (420 kgf·cm, 31 ft·lbf)

21. INSTALL WATER PUMP (See page CO–8)

22. INSTALL KNOCK SENSORS (See page SF–58)

23. INSTALL NO.2 IDLER PULLEY BRACKET
Torque: 38 N·m (380 kgf·cm, 28 ft·lbf)

24. INSTALL WATER BYPASS PIPE WITH KNOCK SENSOR WIRE

(a) Remove any old packing (FIPG) material and be careful not to drop any oil on the contact surfaces of the bypass and cylinder block.
- Using a razor blade and gasket scraper, remove all the old packing (FIPG) material from the gasket surfaces and sealing groove.
- Thoroughly clean all components to remove all the loose material.
- Using a non–residue solvent, clean both sealing surfaces.

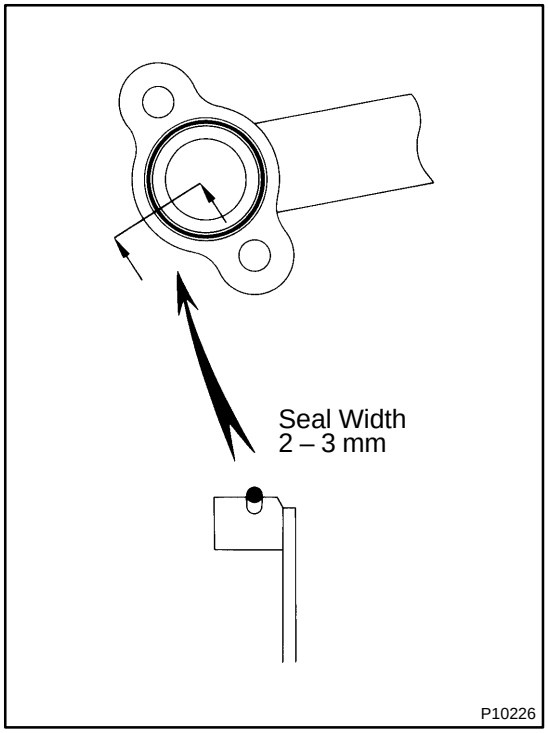

(b) Apply seal packing to the groove of the bypass pipe.
Seal packing: Part No. 08826–00100 or equivalent
- Install a nozzle that has been cut to a 2 – 3 mm (0.08 – 0.12 in.) opening.

HINT:
Avoid applying an excessive amount to the surface.
- Parts must be assembled within 5 minutes of application. Otherwise the material must be removed and reapplied.
- Immediately remove nozzle from the tube and reinstall cap.

(c) Install the bypass pipe with the 2 bolts and nut.
Torque: 8.5 N·m (85 kgf·cm, 75 in.·lbf)

(d) Connect the 2 knock sensor connectors.

25. INSTALL CYLINDER HEADS (See page EM–52)

26. INSTALL PULLEYS AND TIMING BELT (See page EM–19)

27. REMOVE ENGINE STAND

28. INSTALL REAR END PLATE
Torque: 7.5 N·m (75 kgf·cm, 66 in.·lbf)

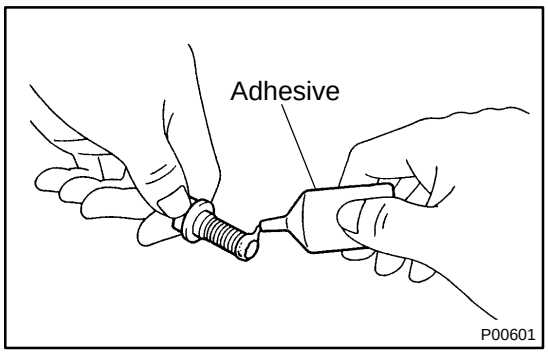

29. A/T:
INSTALL DRIVE PLATE

(a) Apply adhesive to 2 or 3 threads of the mounting bolt end.
Adhesive:
Part No. 08833–00070, THREE BOND 1324 or equivalent

(b) Install the front spacer, drive plate and rear spacer on the crankshaft.

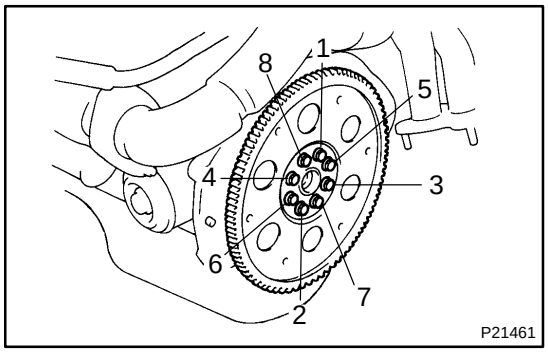

(c) Install and uniformly tighten the 8 mounting bolts in several passes, in the sequence shown.
Torque: 83 N·m (850 kgf·cm, 61 ft·lbf)

30. M/T:
INSTALL FLYWHEEL (See step 29)
Torque: 85 N·m (850 kgf·cm, 63 ft·lbf)

EM106–02

REPLACEMENT

1. REPLACE CONNECTING ROD BUSHINGS

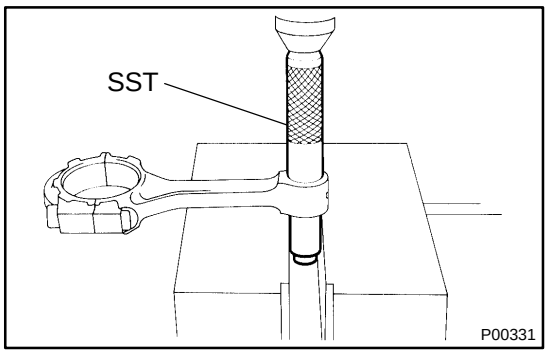

(a) Using SST and a press, press out the bushing.
SST 09222–30010

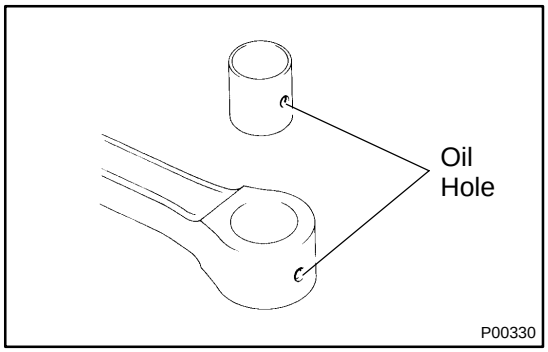

(b) Align the oil holes of a new bushing and the connecting rod.

(c) Using SST and a press, press in the bushing.
SST 09222–30010

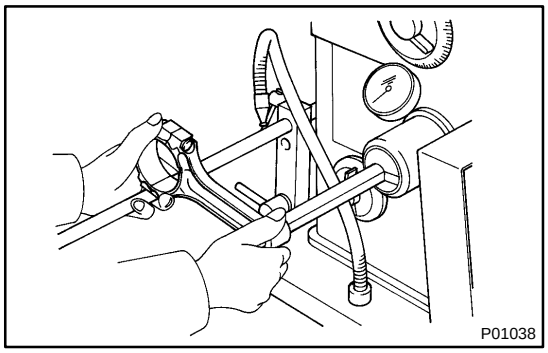

(d) Using a pin hole grinder, hone the bushing to obtain the standard specified clearance (See page EM–88) between the bushing and piston pin.

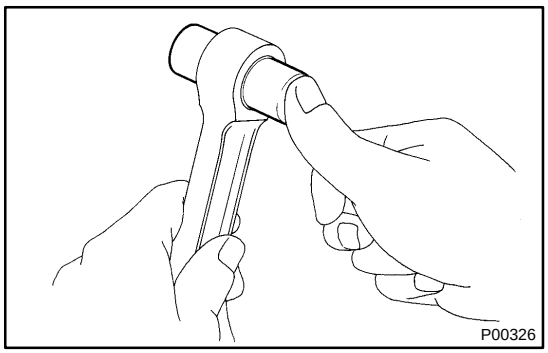

(e) Check the piston pin fit at normal room temperature. Coat the piston pin with engine oil, and push it into the connecting rod with your thumb.

2. REPLACE OVERSIZED (O/S) PISTONS

HINT:

- Bore all the 6 cylinders for the O/S piston outside diameter.
- Replace all the piston rings with ones to match the O/S pistons.

(a) Keep 6 new O/S pistons.
O/S 0.50 piston diameter:
93.856 – 93.886 mm (3.6951 – 3.6963 in.)

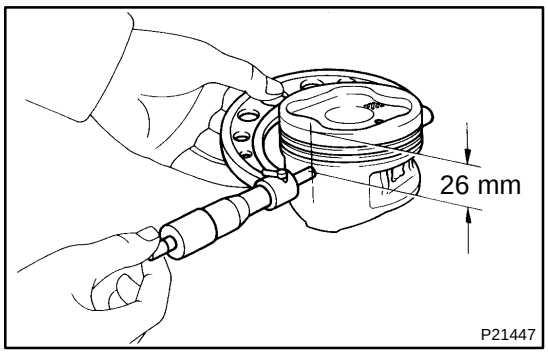

(b) Using a micrometer, measure the piston diameter at right angles to the piston pin center line, 26 mm (1.02 in.) from the piston head.

(c) Calculate the amount of each cylinder is to be rebored as follows:

Size to be rebored = P + C – H
P = Piston diameter
C = Piston oil clearance:
0.134 – 0.154 mm (0.0053 – 0.0060 in.)
H = Allowance for honing:
0.02 mm (0.0008 in.) or less

(d) Bore and hone cylinder to calculated dimensions
Maximum honing: 0.02 mm (0.0008 in.)

NOTICE:

Excess honing will destroy the finished roundness.

3. REPLACE CRANKSHAFT FRONT OIL SEAL
(See page LU–12)

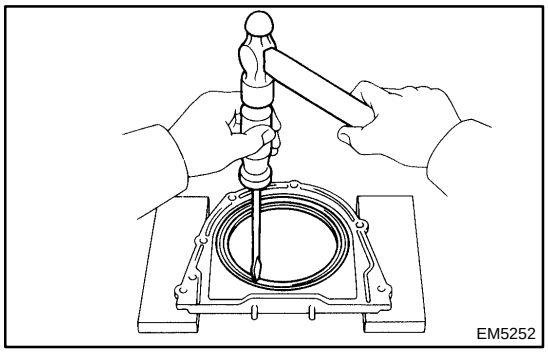

4. REPLACE CRANKSHAFT REAR OIL SEAL

HINT:

There are 2 methods ((a) and (b)) to replace the oil seal.

(a) If rear oil seal retainer is removed from the cylinder block:

(1) Using a screwdriver and hammer, tap out the oil seal.

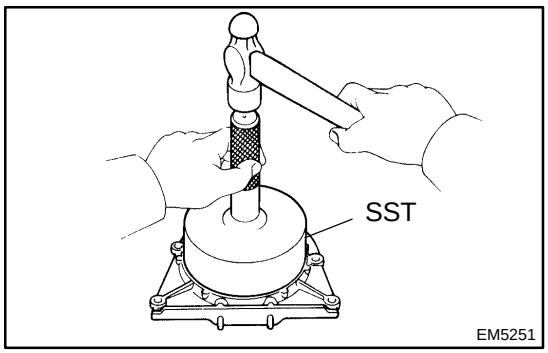

(2) Using SST and a hammer, tap in a new oil seal until its surface is flush with the rear oil seal retainer edge.

SST 09223–15030, 09950–70010 (09951–07150)

(3) Apply MP grease to the oil seal lip.

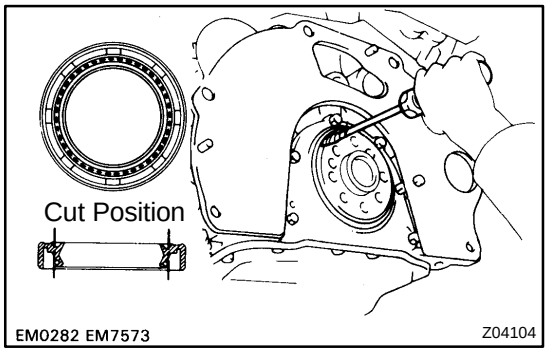

(b) If rear oil seal retainer is installed to the cylinder block:

(1) Using a knife, cut off the oil seal lip.

(2) Using a screwdriver, pry out the oil seal.

NOTICE:

Be careful not to damage the crankshaft. Tape the screwdriver tip.

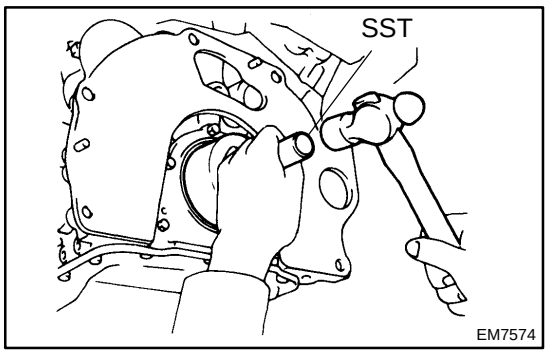

(3) Apply MP grease to a new oil seal lip.
(4) Using SST and a hammer, tap in the oil seal until its surface is flush with the rear oil seal retainer edge.

SST 09923–15030, 09950–70010 (09951–07150)

CYLINDER HEAD

EM1N2–02

COMPONENTS

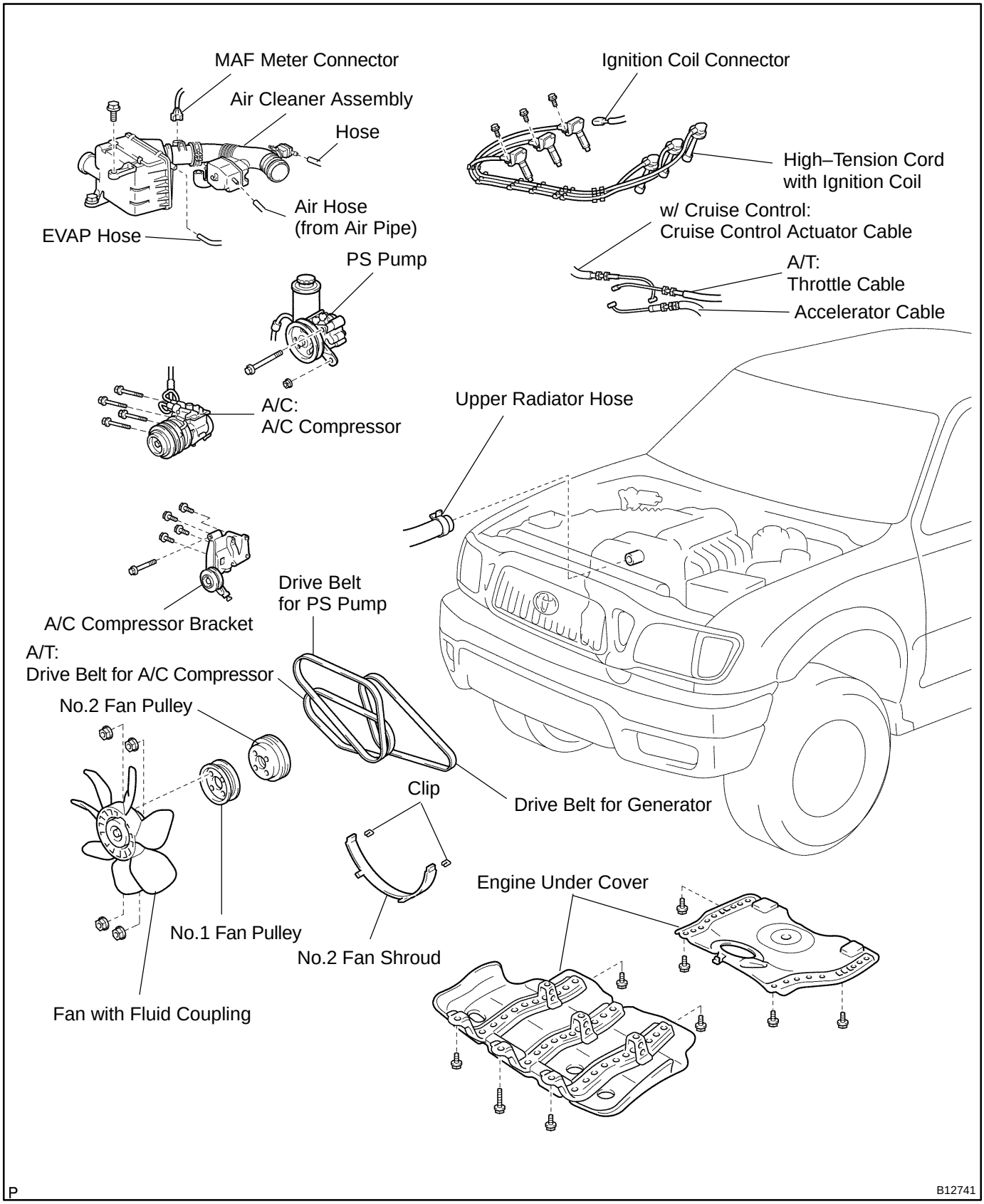

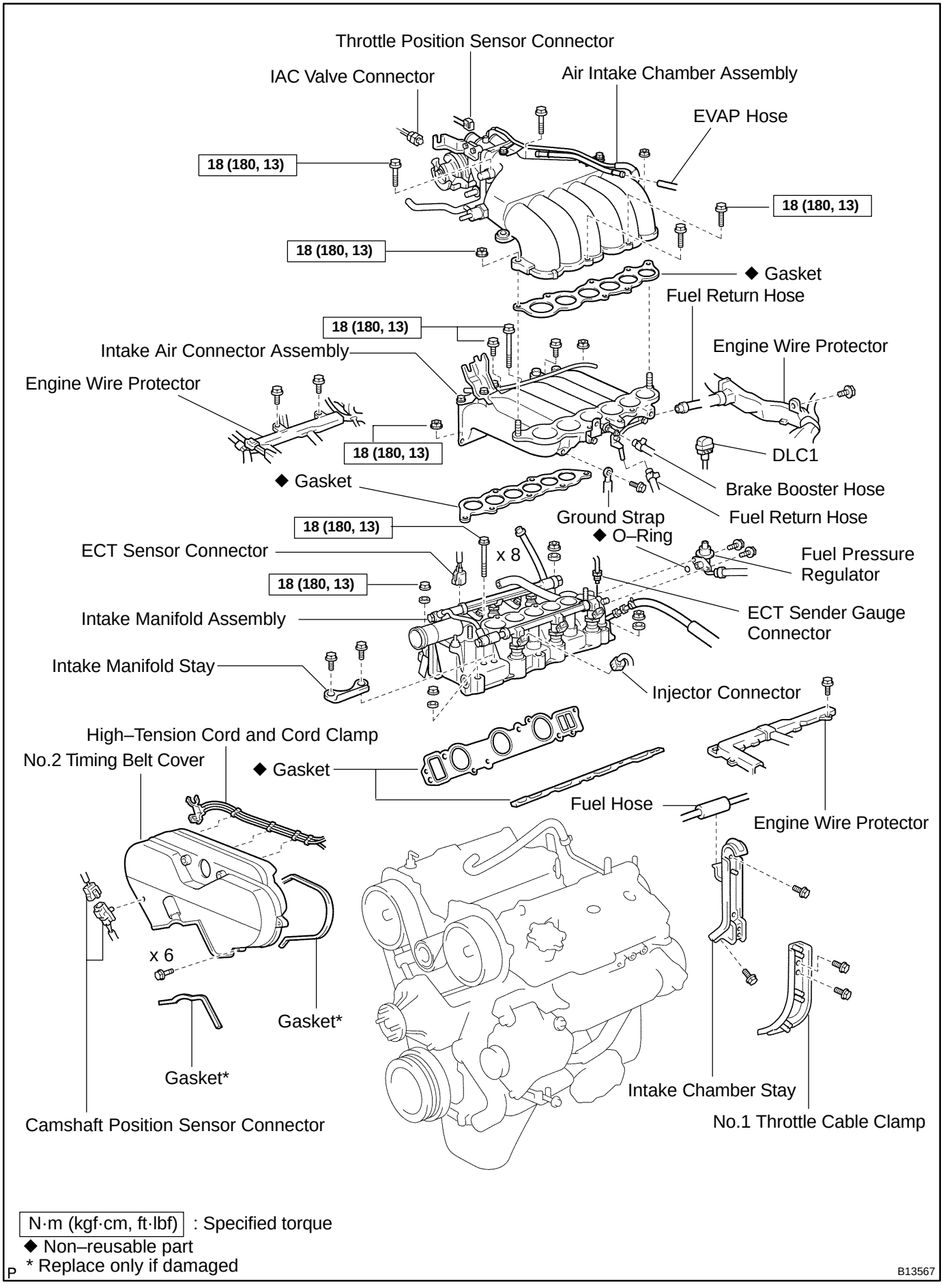
Throttle Position Sensor Connector
IAC Valve Connector
Air Intake Chamber Assembly
EVAP Hose
18 (180, 13)
18 (180, 13)
18 (180, 13)
◆ Gasket
Fuel Return Hose
18 (180, 13)
Intake Air Connector Assembly
Engine Wire Protector
Engine Wire Protector
18 (180, 13)
DLC1
◆ Gasket
Brake Booster Hose
Ground Strap
Fuel Return Hose
18 (180, 13)
◆ O–Ring
ECT Sensor Connector
x 8
Fuel Pressure Regulator
18 (180, 13)
Intake Manifold Assembly
ECT Sender Gauge Connector
Intake Manifold Stay
Injector Connector
High–Tension Cord and Cord Clamp
No.2 Timing Belt Cover
◆ Gasket
Fuel Hose
Engine Wire Protector
x 6
Gasket*
Gasket*
Intake Chamber Stay
Camshaft Position Sensor Connector
No.1 Throttle Cable Clamp
N·m (kgf·cm, ft·lbf) : Specified torque
◆ Non–reusable part
* Replace only if damaged
B13567

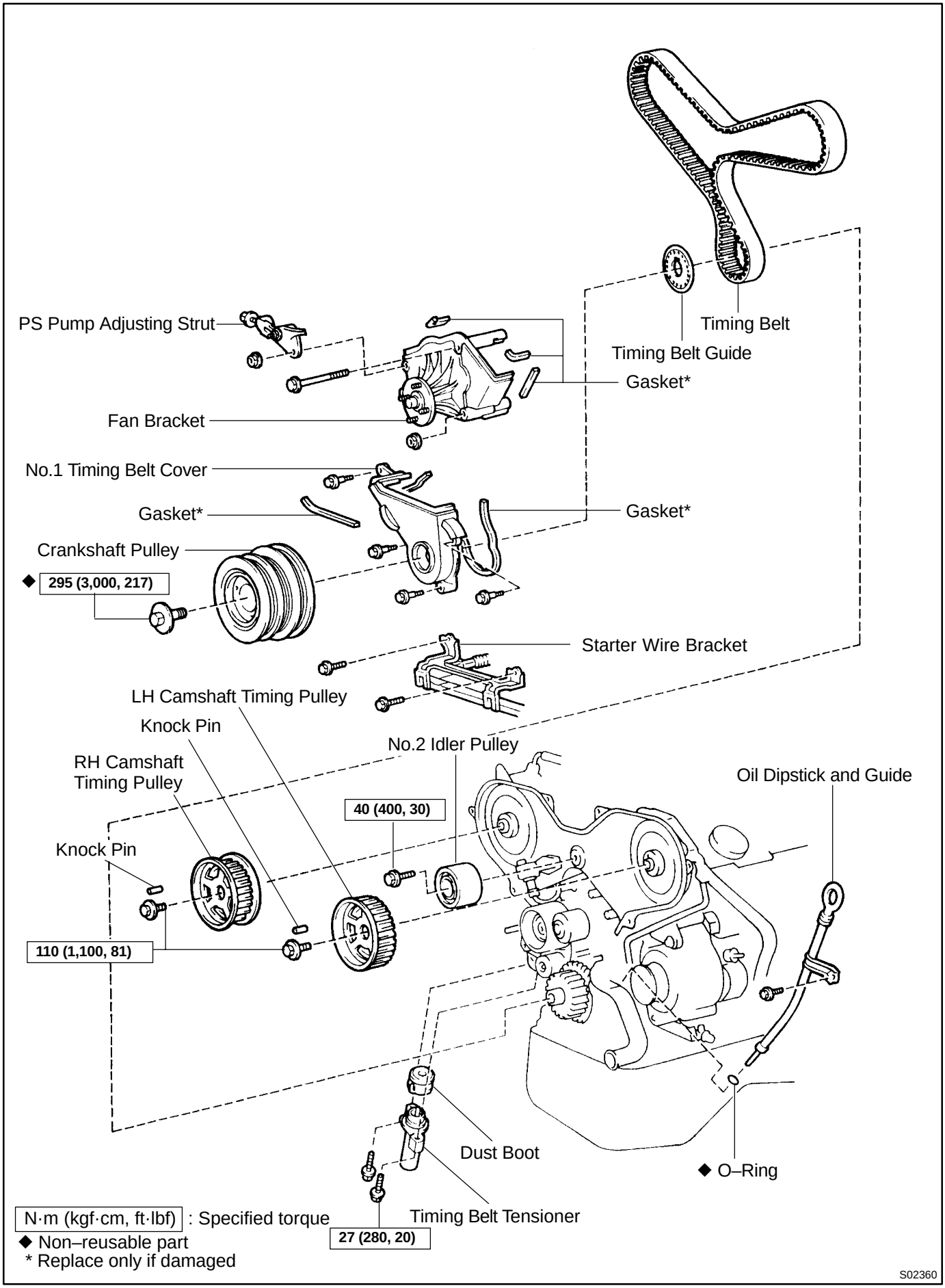
PS Pump Adjusting Strut
Timing Belt
Timing Belt Guide
Gasket*
Fan Bracket
No.1 Timing Belt Cover
Gasket*
Gasket*
Crankshaft Pulley
◆ 295 (3,000, 217)
Starter Wire Bracket
LH Camshaft Timing Pulley
Knock Pin
No.2 Idler Pulley
RH Camshaft Timing Pulley
Oil Dipstick and Guide
40 (400, 30)
Knock Pin
110 (1,100, 81)
Dust Boot
◆ O–Ring
N·m (kgf·cm, ft·lbf) : Specified torque
◆ Non–reusable part
* Replace only if damaged
Timing Belt Tensioner
27 (280, 20)
S02360

2WD, 4WD

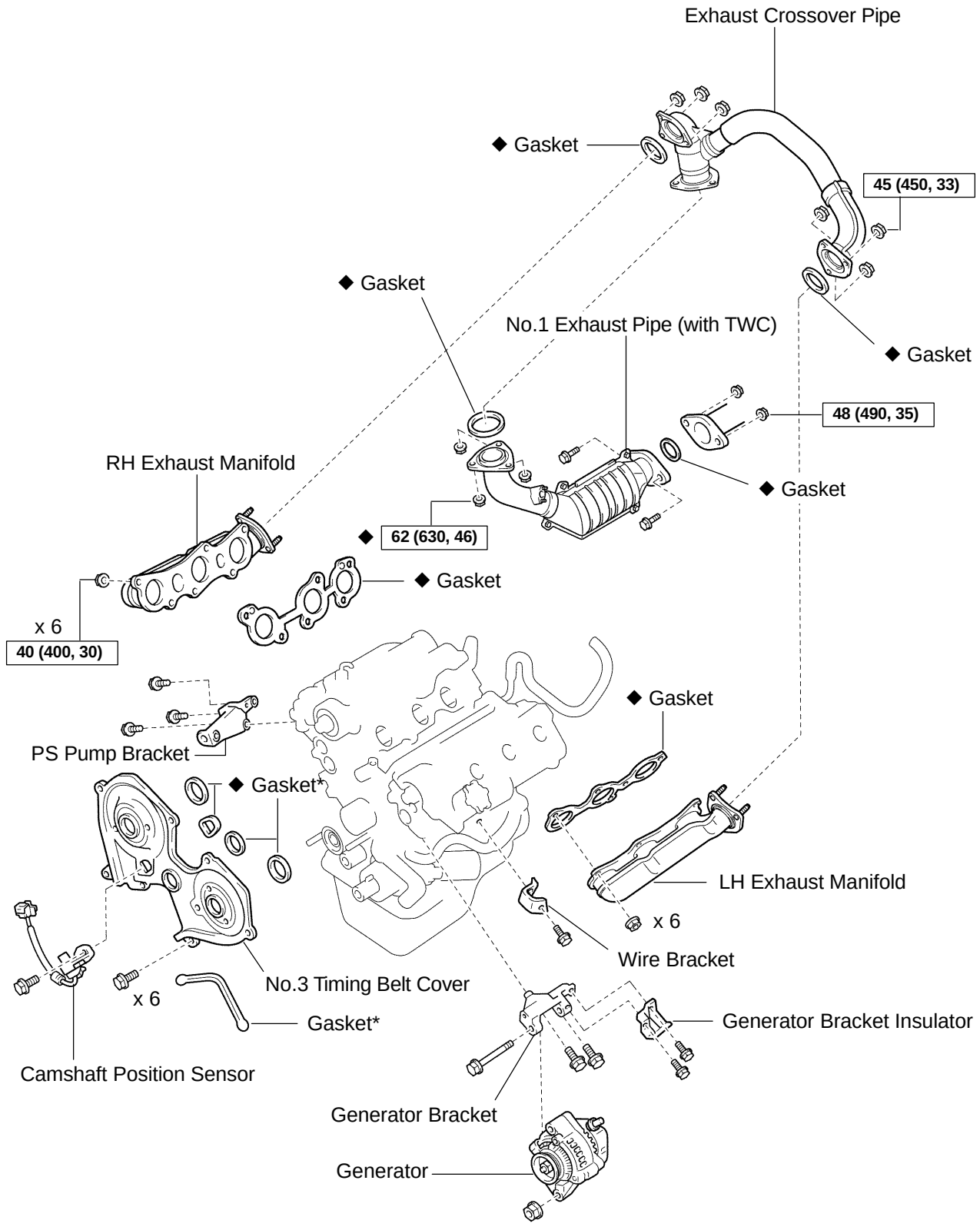

N·m (kgf·cm, ft·lbf) : Specified torque
◆ Non–reusable part
*Replace only if damaged

P B13566

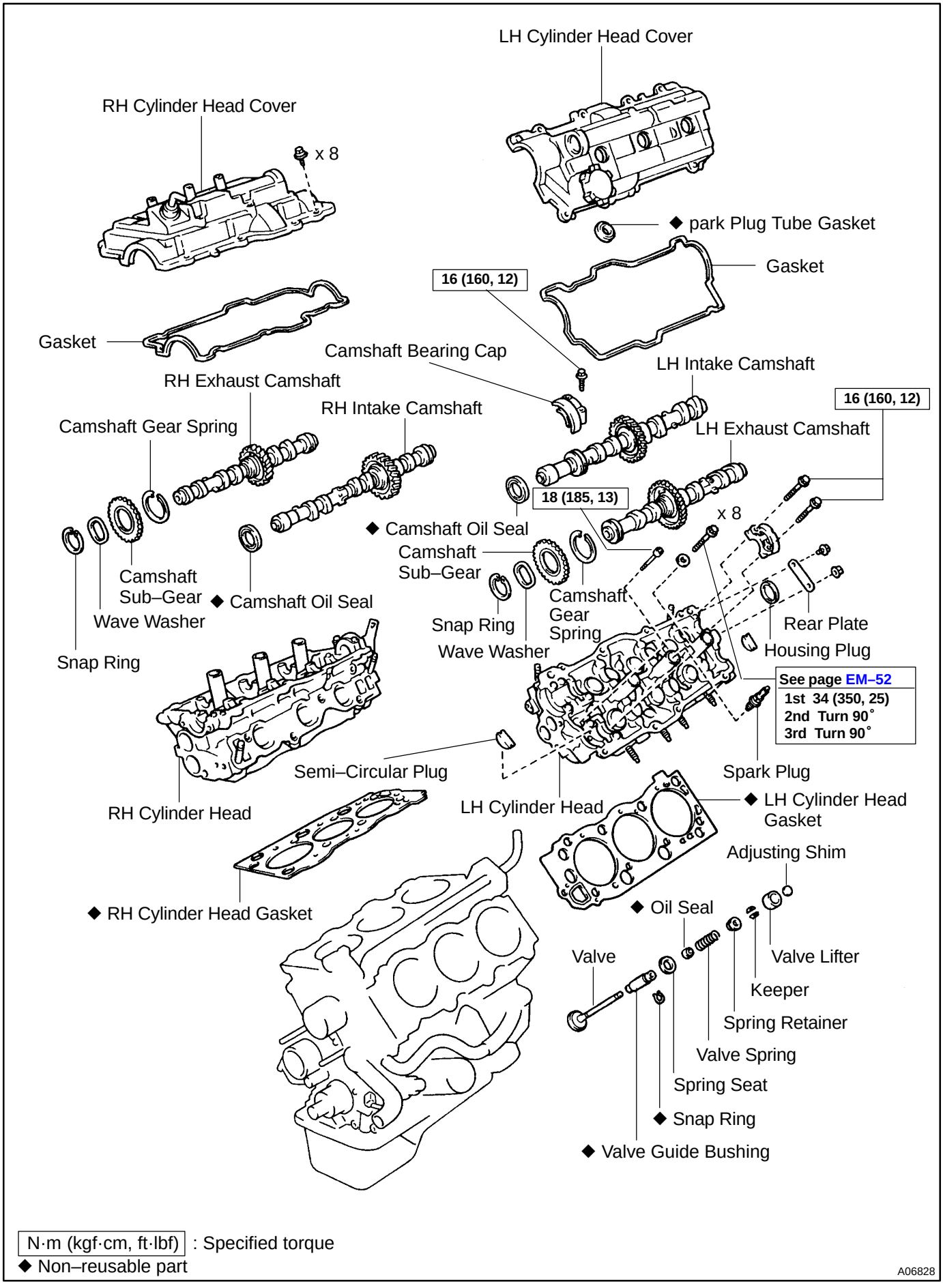
LH Cylinder Head Cover
RH Cylinder Head Cover
x 8
◆ park Plug Tube Gasket
Gasket
16 (160, 12)
Gasket
Camshaft Bearing Cap
LH Intake Camshaft
RH Exhaust Camshaft
RH Intake Camshaft
16 (160, 12)
Camshaft Gear Spring
LH Exhaust Camshaft
18 (185, 13)
x 8
◆ Camshaft Oil Seal
Camshaft Sub–Gear
Camshaft Sub–Gear
◆ Camshaft Oil Seal
Wave Washer
Snap Ring
Camshaft Gear Spring
Snap Ring
Wave Washer
Rear Plate
Housing Plug
See page EM–52
1st 34 (350, 25)
2nd Turn 90°
3rd Turn 90°
Semi–Circular Plug
Spark Plug
RH Cylinder Head
LH Cylinder Head
◆ LH Cylinder Head Gasket
Adjusting Shim
◆ RH Cylinder Head Gasket
◆ Oil Seal
Valve
Valve Lifter
Keeper
Spring Retainer
Valve Spring
Spring Seat
◆ Snap Ring
◆ Valve Guide Bushing
N·m (kgf·cm, ft·lbf) : Specified torque
◆ Non–reusable part
A06828

EM01N–10

DISASSEMBLY

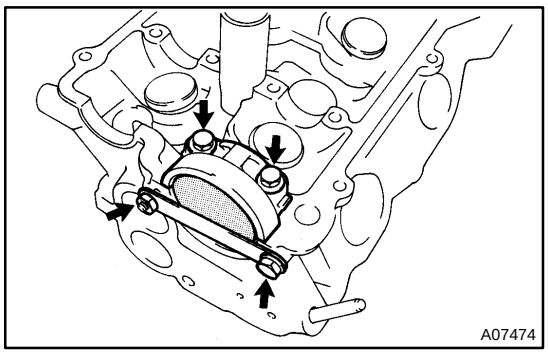

1. REMOVE CAMSHAFT HOUSING PLUGS

(a) Remove the bolt, nut and cylinder head rear plate.

(b) Remove the 2 bolts and camshaft bearing cap and housing plug.

2. REMOVE VALVE LIFTERS AND SHIMS

Pull out the valve lifter and shim by hand.

HINT:

Arrange the valve lifters and shims in correct order.

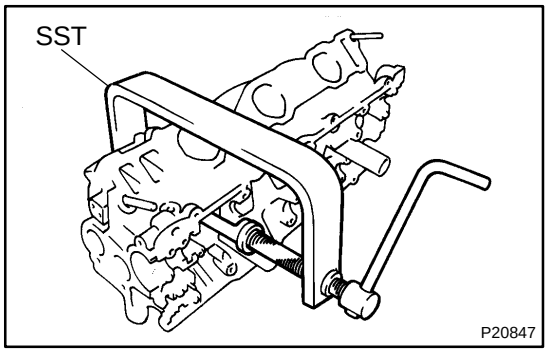

3. REMOVE VALVES

(a) Using SST, compress the valve spring and remove the 2 keepers.

SST 09202–70020

(b) Remove the spring retainer, valve spring and valve.

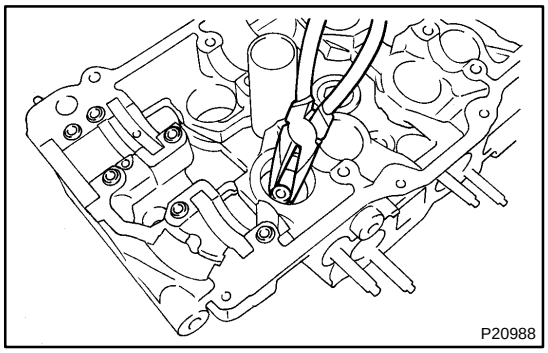

(c) Using needle–nose pliers, remove the oil seal.

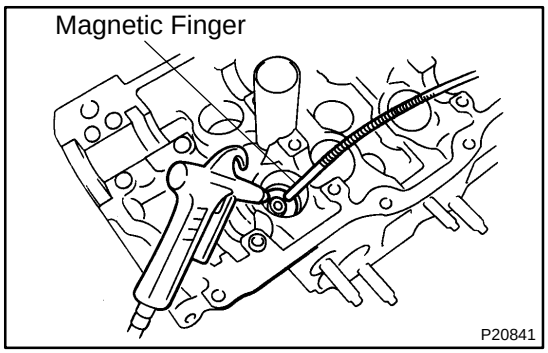

(d) Using compressed air and a magnetic finger, remove the spring seat by blowing air.

HINT:

Arrange the valves, valve springs, spring seats and spring retainers in the correct order.

EM16E–02

INSPECTION

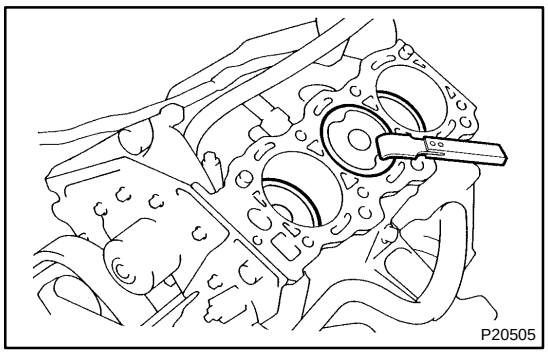

1. CLEAN TOP SURFACES OF PISTONS AND CYLINDER BLOCK

(a) Turn the crankshaft and bring each piston to top dead center (TDC).

(b) Using a gasket scraper, remove all the carbon from the piston top surfaces.

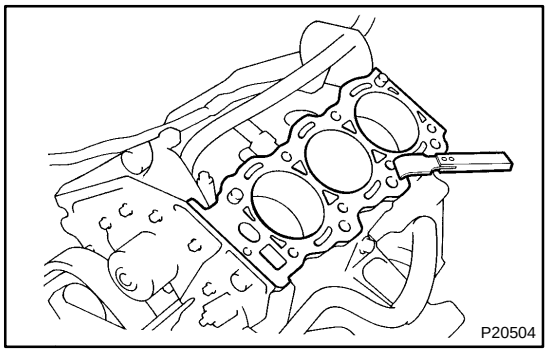

(c) Using a gasket scraper, remove all the gasket material from the cylinder block surfaces.

(d) Using compressed air, blow carbon and oil from the bolt holes.

CAUTION:

Protect your eyes when using high–compressed air.

2. INSPECT TOP SURFACE OF CYLINDER BLOCK FOR FLATNESS (See page EM–88)

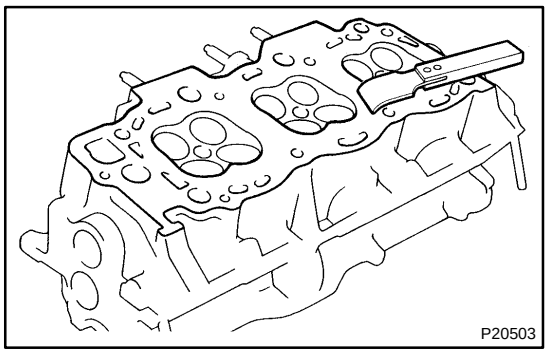

3. CLEAN CYLINDER HEAD

(a) Using a gasket scraper, remove all the gasket material from the cylinder block contact surface.

NOTICE:

Be careful not to scratch the cylinder block contact surfaces.

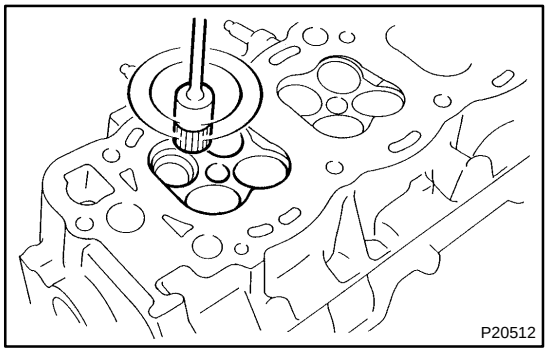

(b) Using a wire brush, remove all the carbon from the combustion chambers.

NOTICE:

Be careful not to scratch the cylinder block contact surfaces.

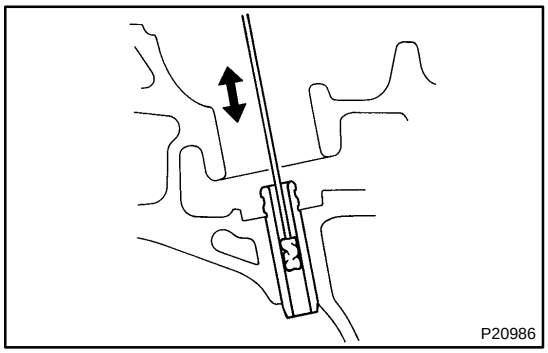

(c) Using a valve guide bushing brush and solvent, clean all the guide bushings.

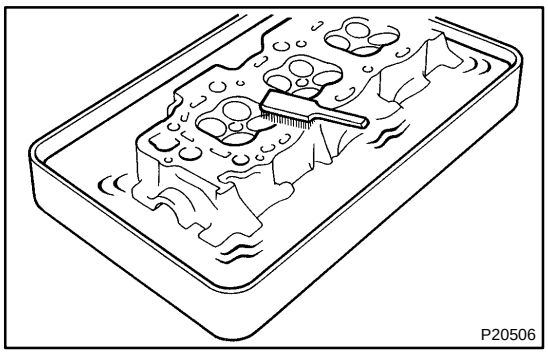

(d) Using a soft brush and solvent, thoroughly clean the cylinder heads.

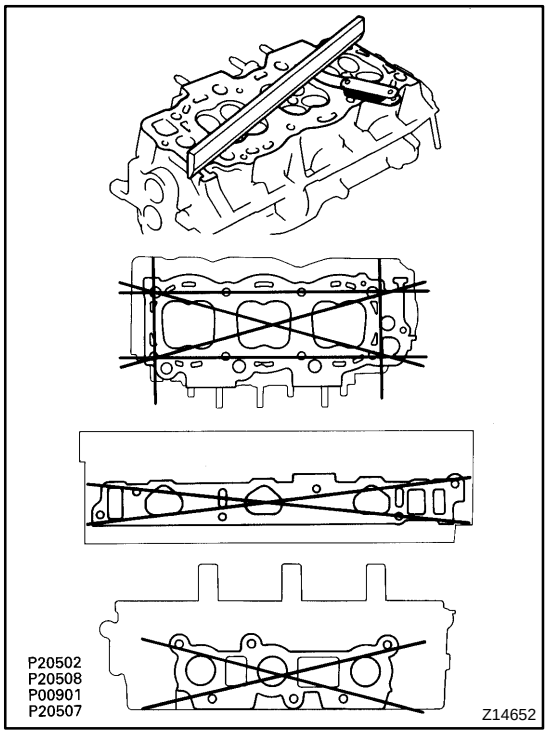

4. INSPECT CYLINDER HEAD

(a) Inspect for flatness.

Using a precision straight edge and feeler gauge, measure the surfaces contacting the cylinder block and manifolds for warpage.

Maximum warpage: 0.10 mm (0.0039 in.)

If warpage is greater than maximum, replace the cylinder head.

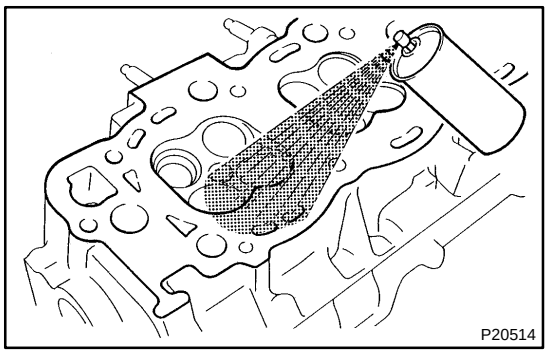

(b) Inspect for cracks.

Using a dye penetrant, check the combustion chamber, intake ports, exhaust ports and cylinder block surface for cracks.

If cracked, replace the cylinder head.

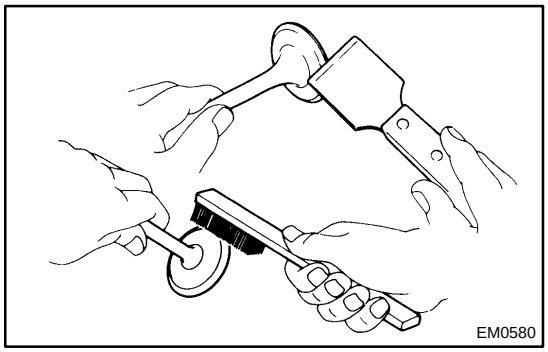

5. CLEAN VALVES

(a) Using a gasket scraper, chip off any carbon from the valve head.

(b) Using a wire brush, thoroughly clean the valve.

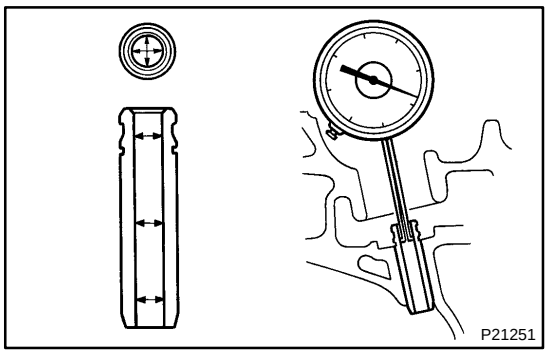

6. INSPECT VALVE STEMS AND GUIDE BUSHINGS

(a) Using a caliper gauge, measure the inside diameter of the guide busing.

Bushing inside diameter:
6.010 – 6.030 mm (0.2366 – 0.2374 in.)

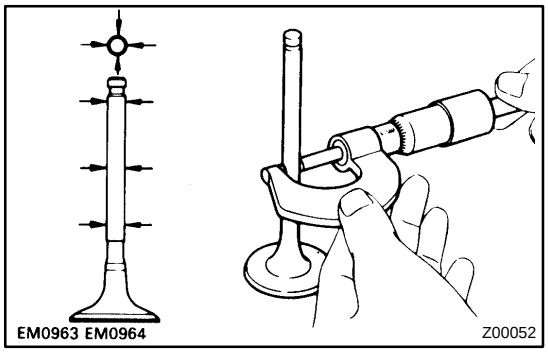

(b) Using a micrometer, measure the diameter of the valve stem.

Valve stem diameter:

Intake	5.970 – 5.985 mm (0.2350 – 0.2356 in.)
Exhaust	5.965 – 5.980 mm (0.2348 – 0.2354 in.)

(c) Subtract the valve stem diameter measurement from the guide bushing inside diameter measurement.

Standard oil clearance:

Intake	0.025 – 0.060 mm (0.0010 – 0.0024 in.)
Exhaust	0.030 – 0.065 mm (0.0012 – 0.0026 in.)

Maximum oil clearance:

Intake	0.08 mm (0.0031 in.)
Exhaust	0.10 mm (0.0039 in.)

If the clearance is greater than maximum, replace the valve and guide bushing (Seepage EM–47).

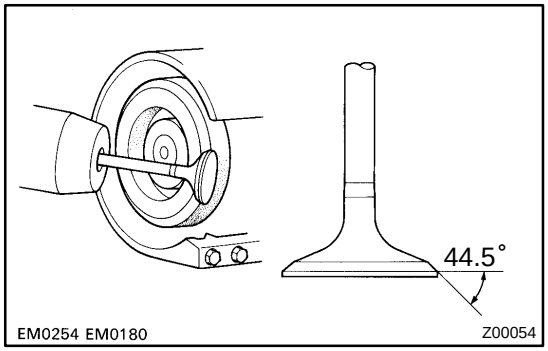

7. INSPECT AND GRIND VALVES

(a) Grind the valve enough to remove pits and carbon.

(b) Check that the valve is ground to the correct valve face angle.

Valve face angle: 44.5°

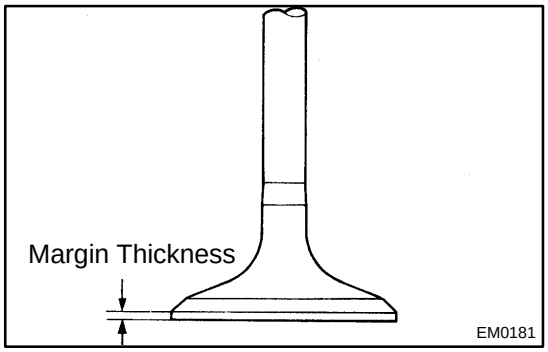

(c) Check the valve head margin thickness.

Standard margin thickness: 1.0 mm (0.039 in.)
Minimum margin thickness: 0.5 mm (0.020 in.)

If the margin thickness is less than the minimum, replace the valve.

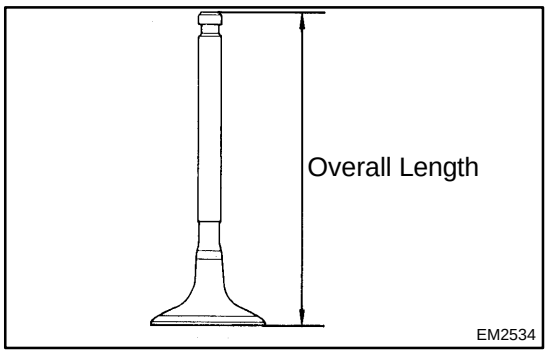

(d) Check the valve overall length.

Standard overall length:

Intake	95.15 mm (3.7461 in.)
Exhaust	94.90 mm (3.7362 in.)

Minimum overall length:

Intake	94.60 mm (3.7244 in.)
Exhaust	94.40 mm (3.7165 in.)

If the overall length is less than the minimum, replace the valve.

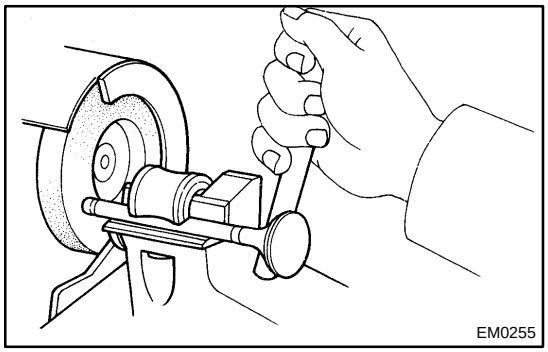

(e) Check the surface of the valve stem tip for wear.

If the valve stem tip is worn, resurface the tip with a grinder or replace the valve.

NOTICE:

Do not grind off more than the minimum.

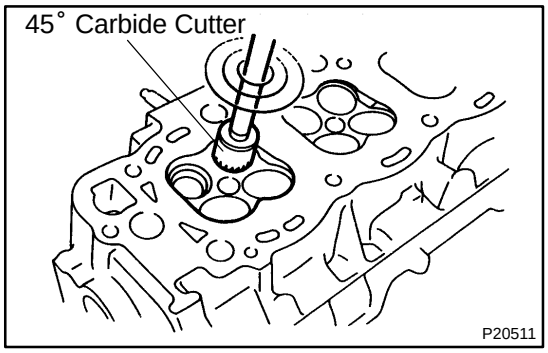

8. INSPECT AND CLEAN VALVE SEATS

(a) Using a 45˚ carbide cutter, resurface the valve seats.

(b) Remove only enough metal to clean the seats.

(c) Check the valve seating position.

Apply a light coat of prussian blue (or white lead) to the valve face. Lightly press the valve against the seat. Do not rotate the valve.

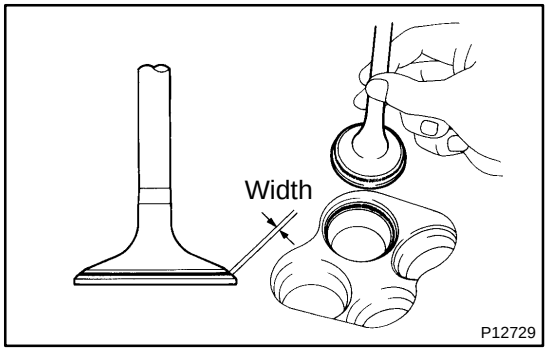

(d) Check the valve face and seat for the following:

(1) If blue appears 360˚ around the face, the valve is concentric. If not, replace the valve.

(2) If blue appears 360˚ around the valve seat, the guide and face are concentric. If not, resurface the seat.

(3) Check that the seat contact is in the middle of the valve face with these width.

1.0 – 1.4 mm (0.039 – 0.055 in.)

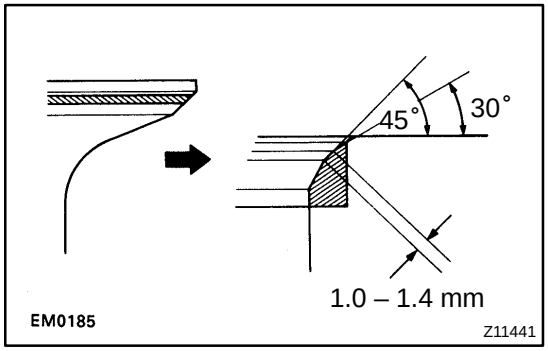

If not, correct the valve seats as follows:

(1) If the seating is too high on the valve face, use 30˚ and 45˚ cutters to correct the seat.

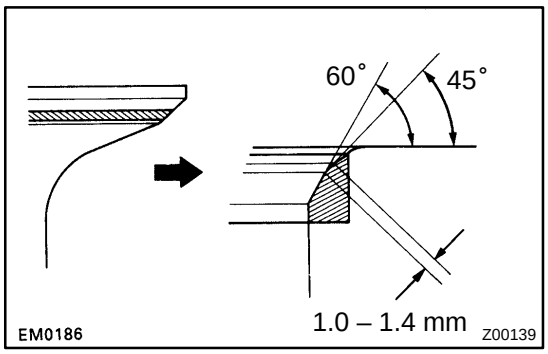

(2) If the seating is too low on the valve face, use 60° and 45° cutters to correct the seat.

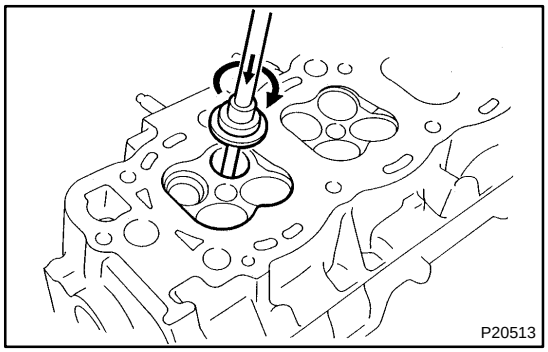

(e) Hand–lap the valve and valve seat with an abrasive compound.

(f) After hand–lapping, clean the valve and valve seat.

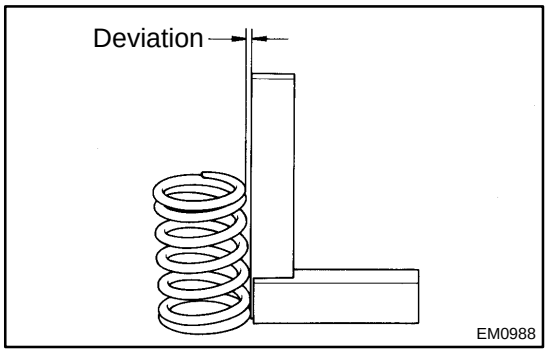

9. INSPECT VALVE SPRINGS

(a) Using a steel square, measure the squareness of the valve spring.

Maximum deviation: 2.0 mm (0.079 in.)

If deviation is greater than maximum, replace the valve spring.

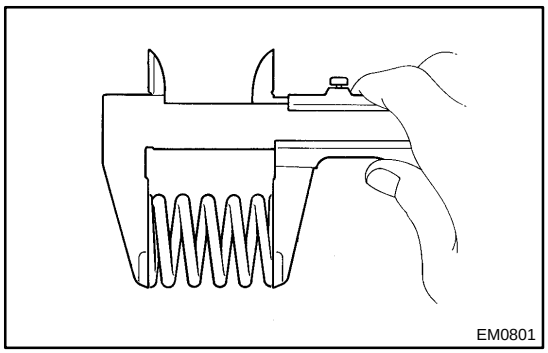

(b) Using vernier calipers, measure the free length of the valve spring.

Free length: 44.78 mm (1.7630 in.)

If the free length is not as specified, replace the valve spring.

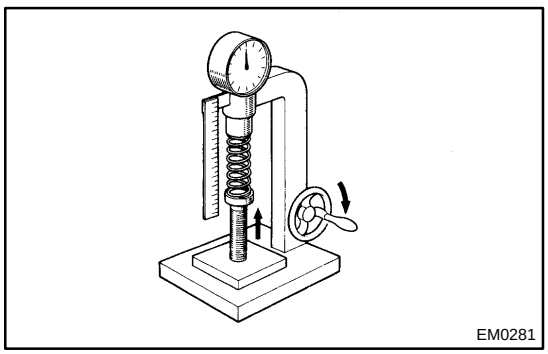

(c) Using a spring tester, measure the tension of the valve spring at the specified installed length.

Installed tension:
186 – 206 N (19.0 – 21.0 kgf, 41.9 – 46.3 lbf)
at 33.3 mm (1.311 in.)

If the installed tension is not as specified, replace the valve spring.

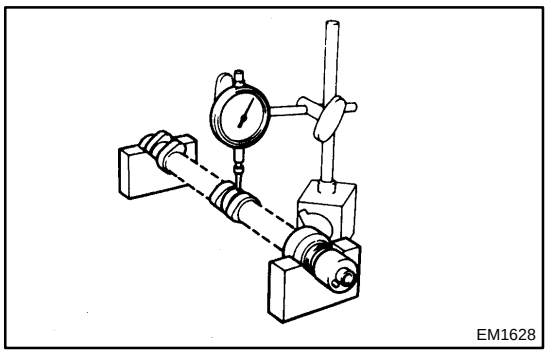
EM1628

10. INSPECT CAMSHAFTS

(a) Inspect the runout.

(1) Place the camshaft on V–blocks.

(2) Using a dial indicator, measure the circle runout at the center journal.

Maximum circle runout: 0.06 mm (0.0024 in.)

If the circle runout is greater than maximum, replace the camshaft.

Standard cam lobe height:

Intake	42.31 – 42.41 mm (1.6657 – 1.6697 in.)
Exhaust	41.96 – 42.06 mm (1.6520 – 1.6559 in.)

Minimum cam lobe height:

Intake	42.16 mm (1.6598 in.)
Exhaust	41.81 mm (1.6461 in.)

If the cam lobe height is less than minimum, replace the camshaft.

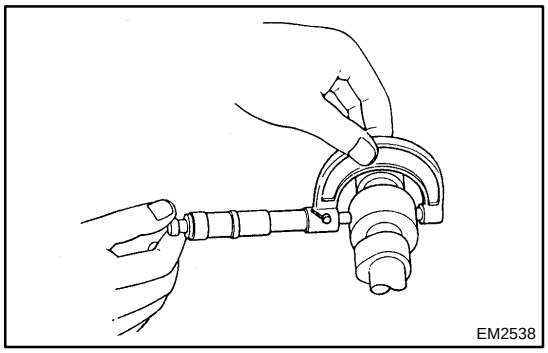
EM2538

(b) Using a micrometer, measure the journal diameter.

Journal diameter:

26.949 – 26.965 mm (1.0610 – 1.0616 in.)

If the journal diameter is not as specified, check the oil clearance.

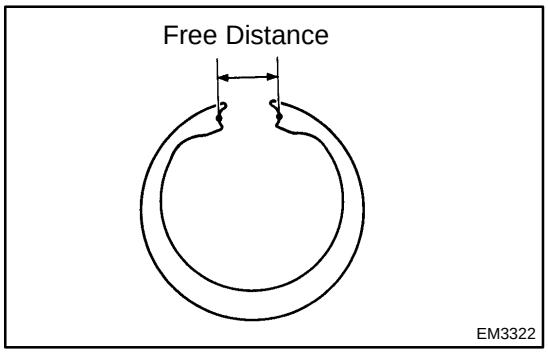

EM3322

(c) Using vernier calipers, measure the free distance between the spring end.

Free distance: 18.2 – 18.8 mm (0.712 – 0.740 in.)

If the free distance is not as specified, replace the gear spring.

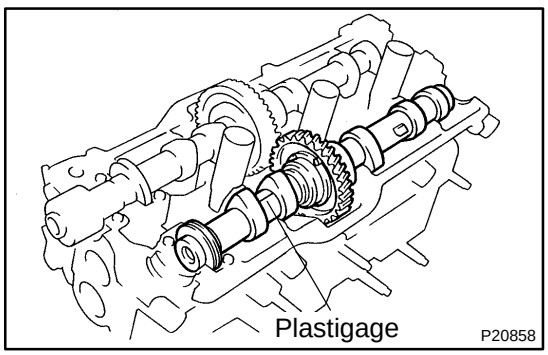

P20858

(d) Inspect the camshaft journal oil clearance.

(1) Clean the bearing caps and camshaft journals.

(2) Check the bearings for flaking and scoring.

If the bearings are damaged, replace the bearing caps and cylinder head as a set.

(3) Place the camshafts on the cylinder head.

(4) Lay a strip of Plastigage across each of the camshaft journals.

(5) Install the bearing caps (See page EM–52).

NOTICE:
Do not turn the camshaft.

(6) Remove the bearing caps.

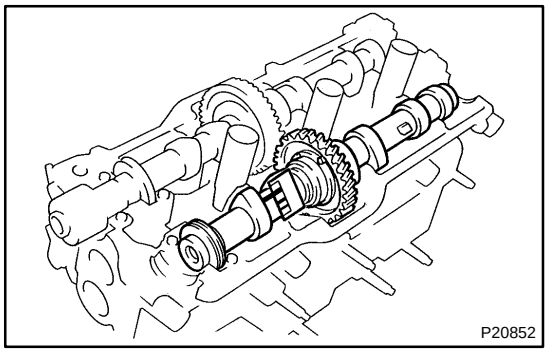

(7) Measure the Plastigage at its widest point.

Standard oil clearance:
0.035 – 0.072 mm (0.0014 – 0.0028 in.)
Maximum oil clearance: 0.10 mm (0.0039 in.)

If the oil clearance is greater than maximum, replace the camshaft. If necessary, replace the bearing caps and cylinder head as a set.

(8) Completely remove the Plastigage.

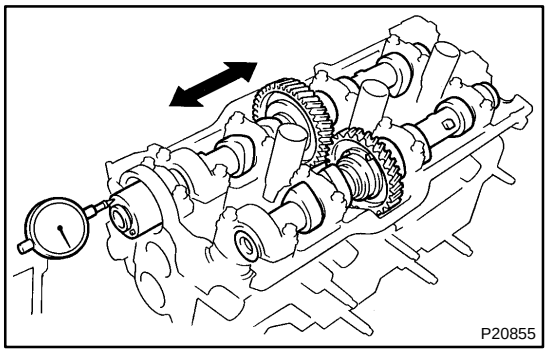

(e) Inspect the camshaft thrust clearance.

(1) Install the camshafts (See page EM–4).

(2) Using a dial indicator, measure the thrust clearance while moving the camshaft back and forth.

Standard thrust clearance:
0.033 – 0.080 mm (0.0013 – 0.0031 in.)
Maximum thrust clearance: 0.12 mm (0.0047 in.)

If the thrust clearance is greater than maximum, replace the camshaft. If necessary, replace the bearing caps and cylinder head as a set.

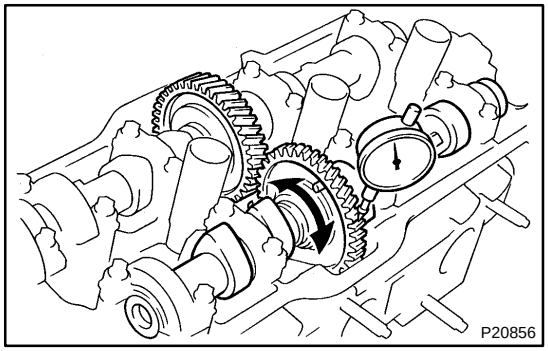

(f) Inspect the camshaft gear backlash.

(1) Install the camshafts without installing the exhaust camshaft sub–gear (See page EM–4).

(2) Using a dial indicator, measure the backlash.

Standard backlash:
0.020 – 0.200 mm (0.0008 – 0.0079 in.)
Maximum backlash: 0.30 mm (0.0188 in.)

If the backlash is greater than maximum, replace the camshafts.

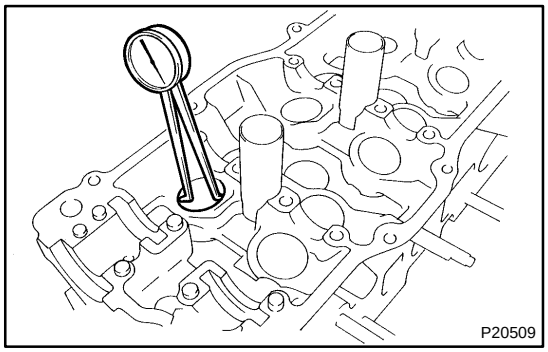

11. INSPECT VALVE LIFTERS AND LIFTER BORES

(a) Using a caliper gauge, measure the lifter bore diameter of the cylinder head.

Lifter bore diameter:
31.000 – 31.018 mm (1.2205 – 1.2212 in.)

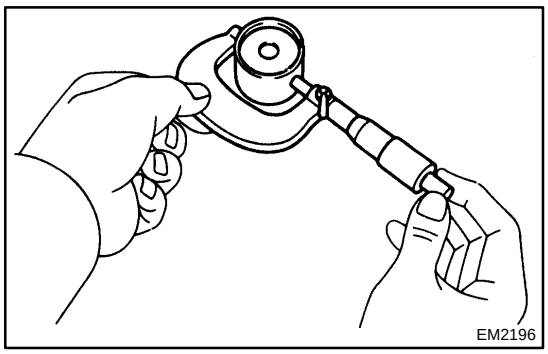
EM2196

(b) Using a micrometer, measure the lifter diameter.
Lifter diameter:
30.966 – 30.976 mm (1.2191 – 1.2195 in.)

(c) Subtract the lifter diameter measurement from the lifter bore diameter measurement.
Standard oil clearance:
0.024 – 0.052 mm (0.0009 – 0.0020 in.)
Maximum oil clearance: 0.08 mm (0.0031 in.)

If the oil clearance is greater than maximum, replace the lifter. If necessary, replace the cylinder head.

12. INSPECT INTAKE MANIFOLD

Using a precision straight edge and feeler gauge, measure the surfaces contacting the cylinder head and intake air connector for warpage.

Maximum warpage: 0.10 mm (0.0039 in.)

If warpage is greater than maximum, replace the intake manifold.

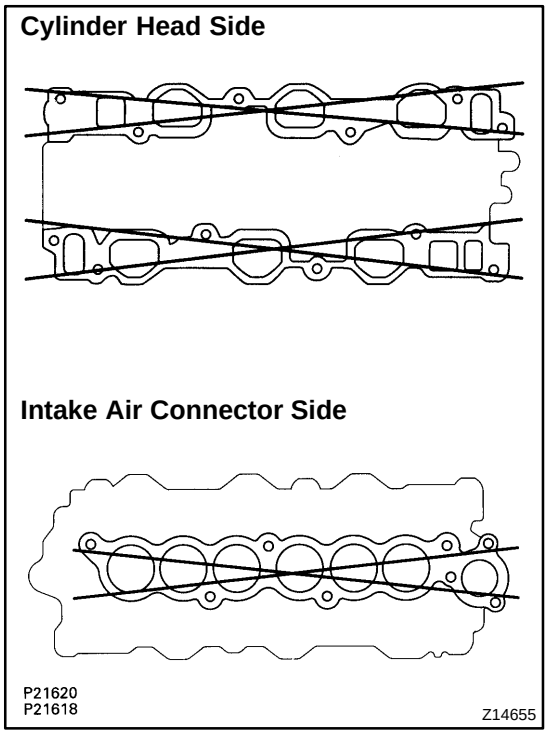

13. INSPECT EXHAUST MANIFOLDS

Using a precision straight edge and feeler gauge, measure the surfaces contacting the cylinder head for warpage.

Maximum warpage: 1.00 mm (0.0394 in.)

If warpage is greater than maximum, replace the exhaust manifold.

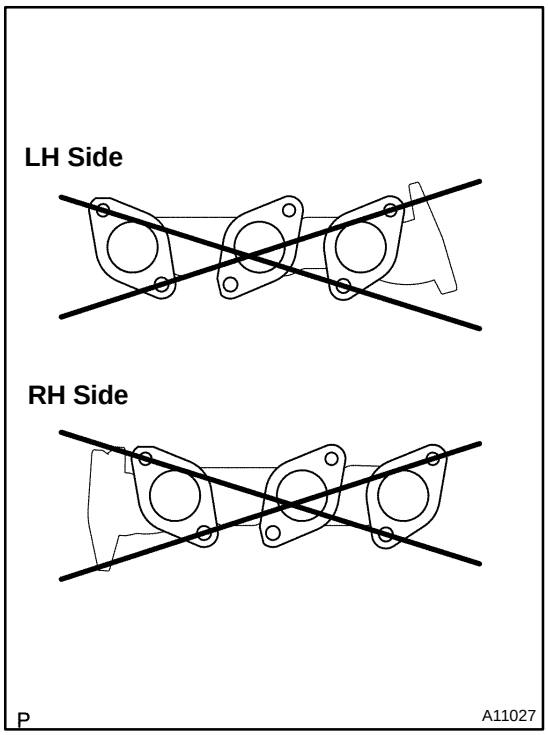

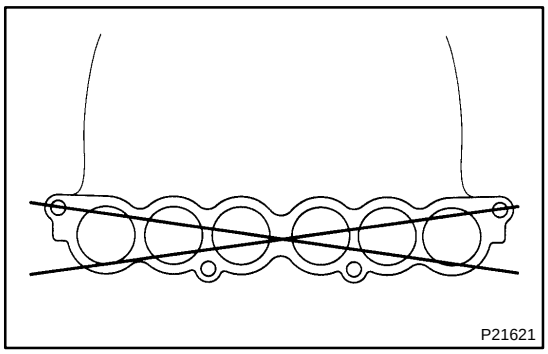

14. INSPECT AIR INTAKE CHAMBER AND INTAKE AIR CONNECTOR

Using a precision straight edge and feeler gauge, measure the surfaces contacting the intake manifold and intake air connector for warpage.

Maximum warpage: 0.10 mm (0.0039 in.)

If warpage is greater than maximum, replace the air intake chamber or intake air connector.

EM0ZZ–04

INSTALLATION

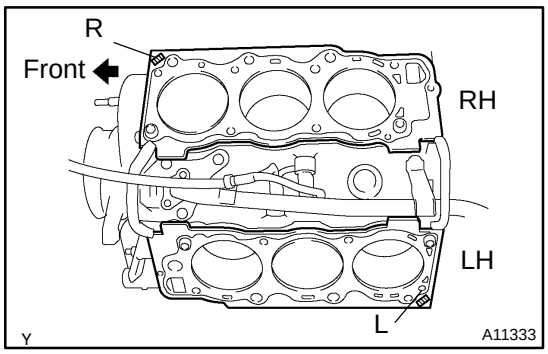

1. PLACE CYLINDER HEAD ON CYLINDER BLOCK

(a) Place 2 new cylinder head gaskets in position on the cylinder block.

NOTICE:

Be careful of the installation direction.

(b) Place the 2 cylinder heads in position on the cylinder head gaskets.

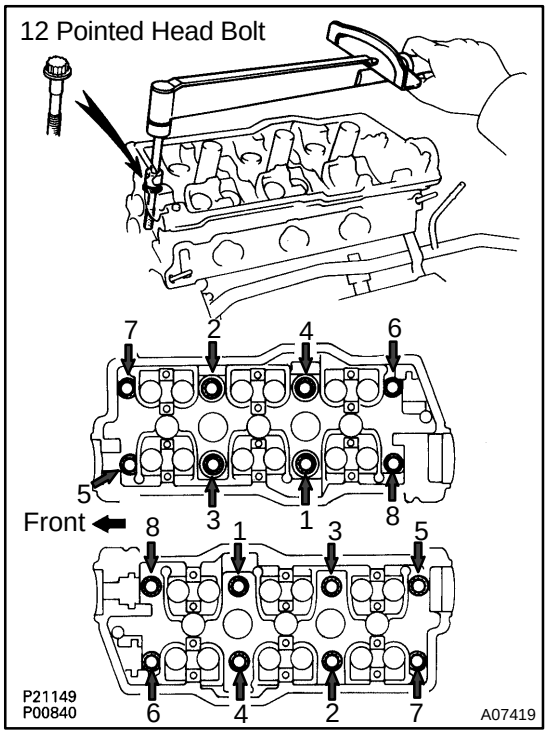

2. INSTALL 12 POINTED HEAD CYLINDER HEAD BOLTS

HINT:

- The cylinder head bolts are tightened in 3 progressive steps (steps (b), (d) and (e)).
- If any bolt is broken or deformed, replace it.

(a) Apply a light coat of engine oil on the threads and under the heads of the cylinder head bolts.

(b) Install and uniformly tighten the cylinder head bolts on each cylinder head in several passes, in the sequence shown, then repeat for the other side as shown.

Torque: 34 N·m (350 kgf·cm, 25 ft·lbf)

If any of the cylinder head bolts does not meet the torque specification, replace the cylinder head bolt.

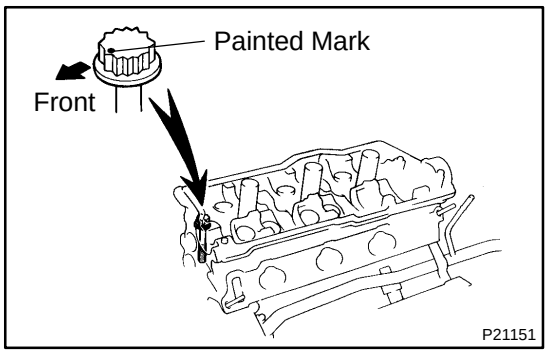

(c) Mark the front of the cylinder head bolt head with paint.

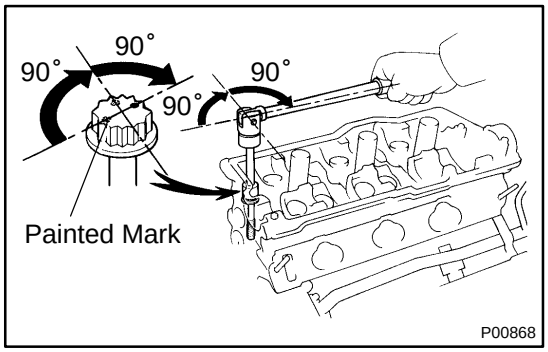

(d) Retighten the cylinder head bolts by 90° in the numerical order shown.

(e) Retighten the cylinder head bolts by an additional 90°.

(f) Check that the painted mark is now facing rearward.

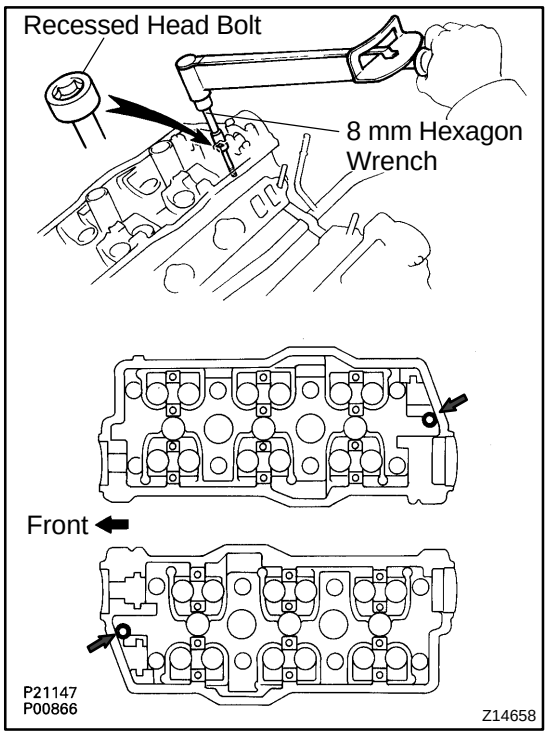

3. INSTALL RECESSED HEAD CYLINDER HEAD BOLTS

(a) Apply a light coat of engine oil on the threads and under the heads of the cylinder head bolts.

(b) Using an 8 mm hexagon wrench, install the cylinder head bolt on each cylinder head, then repeat for the other side as shown.

Torque: 18 N·m (185 kgf·cm, 13 ft·lbf)

(c) Connect the ground strap with the bolt.

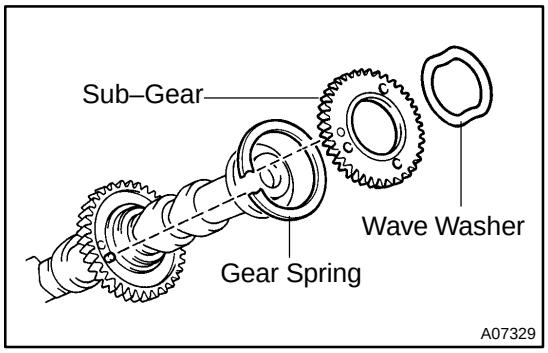

4. ASSEMBLE EXHAUST CAMSHAFTS

(a) Mount the hexagonal wrench head portion of the camshaft in a vise.

NOTICE:

Be careful not to damage the camshaft.

(b) Install the camshaft gear spring, camshaft sub–gear and Wave washer.

HINT:

Attach the pins on the gears to the gear spring ends.

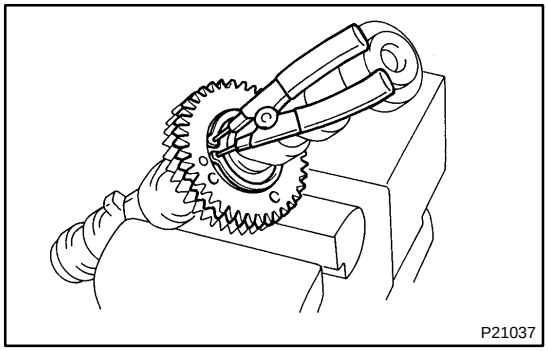

(c) Using snap ring pliers, install the snap ring.

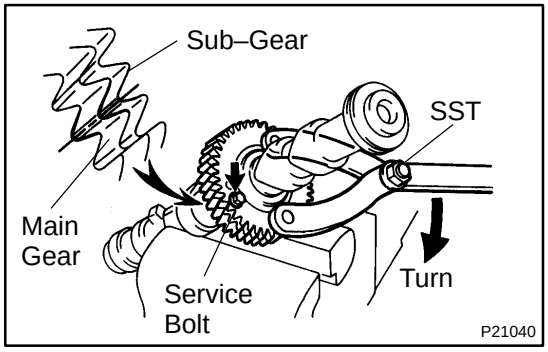

(d) Using SST, align the holes of the camshaft main gear and sub–gear by turning camshaft sub–gear clockwise, and temporarily install a service bolt.

SST 09960–10010 (09962–01000, 09963–00600)

(e) Align the gear teeth of the main gear and sub–gear, and tighten the service bolt.

5. INSTALL CAMSHAFTS

NOTICE:

Since the thrust clearance of the camshaft is small, the camshaft must be kept level while it is being installed. If the camshaft is not kept level, the portion of the cylinder head receiving the shaft thrust may crack or be damaged, causing the camshaft to seize or break. To avoid this, these steps should be carried out.

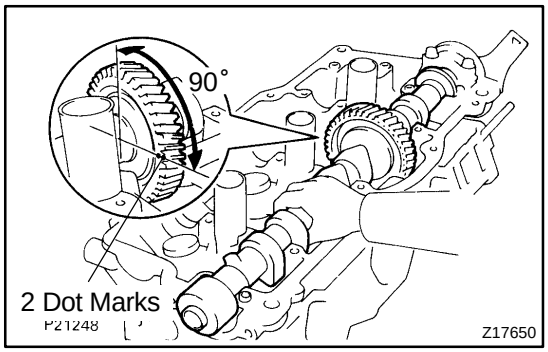

(a) Install the intake camshaft of the RH cylinder head.
  (1) Apply new engine oil to the thrust portion and journal of the camshaft.
  (2) Place the intake camshaft at 90˚ angle of timing mark (2 dot marks) on the cylinder head.

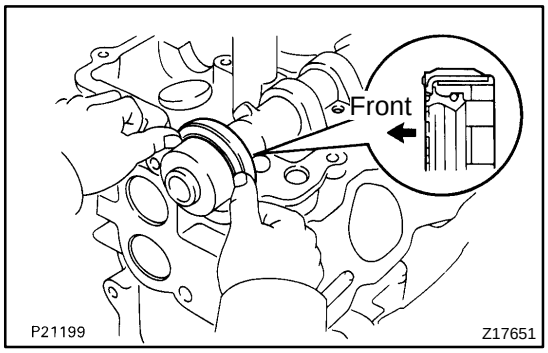

  (3) Apply MP grease to a new oil seal lip.
  (4) Install the oil seal to the camshaft.

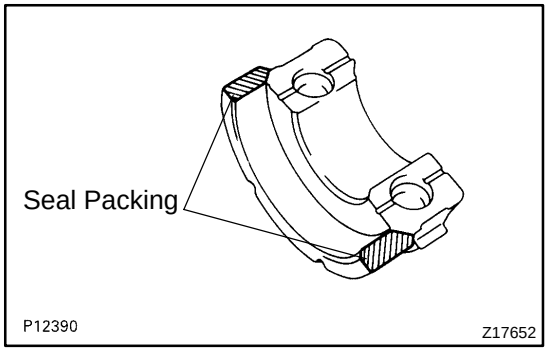

  (5) Remove any old packing (FIPG) material.
  (6) Apply seal packing to the No.1 bearing cap as shown in the illustration.

Seal packing: Part No. 08826–00080 or equivalent

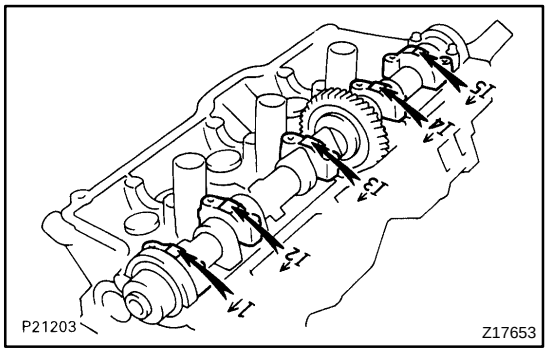

  (7) Install the 5 bearing caps in their proper locations.

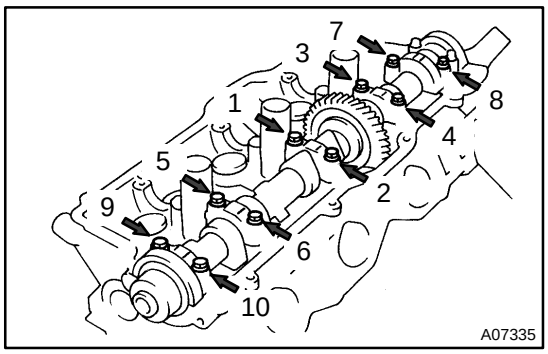

(8) Apply a light coat of engine oil on the threads and under the heads of the bearing cap bolts.
(9) Install and uniformly tighten the 10 bearing cap bolts, in several passes, in the sequence shown.

Torque: 16 N·m (160 kgf·cm, 12 ft·lbf)

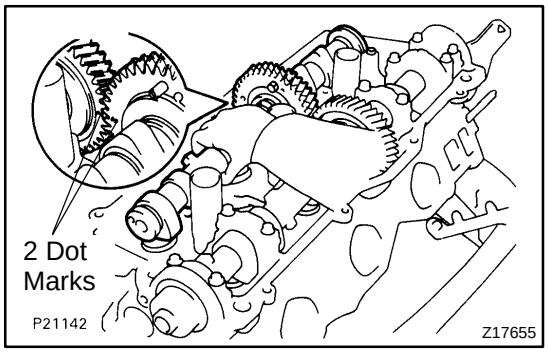

(b) Install the exhaust camshaft of the RH cylinder head.
(1) Apply new engine oil to the thrust portion and journal of the camshaft.
(2) Align the timing marks (2 dot marks) of the camshaft drive and driven gears.
(3) Place the exhaust camshaft on the cylinder head.

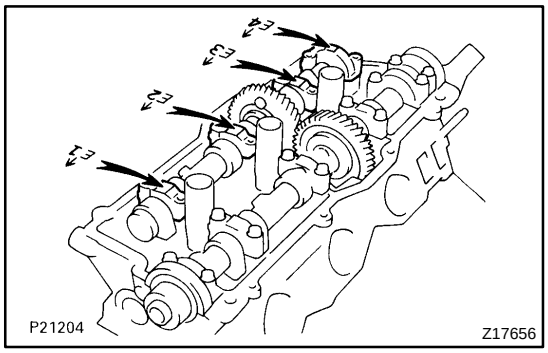

(4) Install the 4 bearing caps in their proper locations.

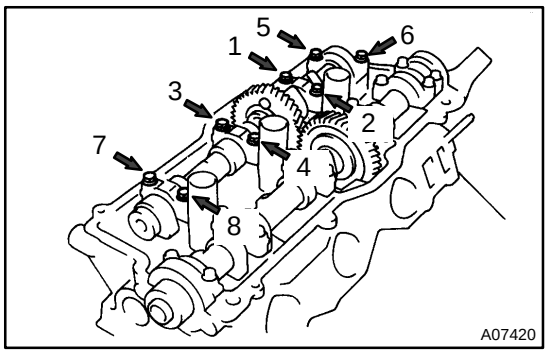

(5) Apply a light coat of engine oil on the threads and under the heads of the bearing cap bolts.
(6) Install and uniformly tighten the 8 bearing cap bolts, in several passes, in the sequence shown.

Torque: 16 N·m (160 kgf·cm, 12 ft·lbf)

(7) Remove the service bolt.

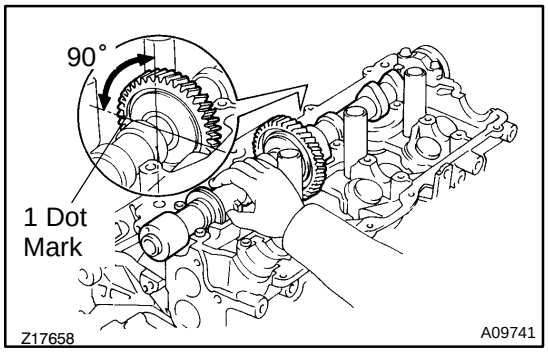

(c) Install the intake camshaft of the LH cylinder head.
(1) Apply new engine oil to the thrust portion and journal of the camshaft.
(2) Place the intake camshaft at 90° angle of timing mark (1 dot mark) on the cylinder head.

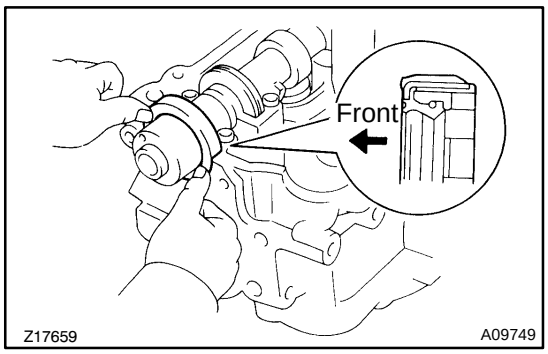

(3) Apply MP grease to a new oil seal lip.
(4) Install the oil seal to the camshaft.

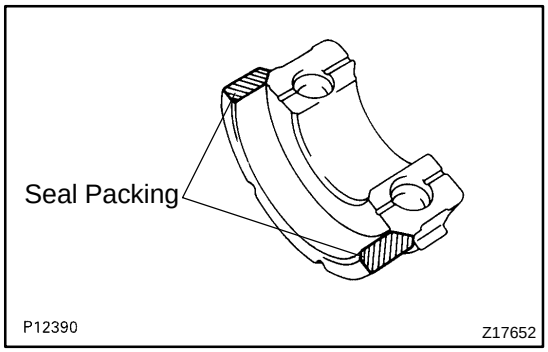

(5) Remove any old packing (FIPG) material.
(6) Apply seal packing to the No.1 bearing cap as shown in the illustration.

Seal packing: Part No. 08826–00080 or equivalent

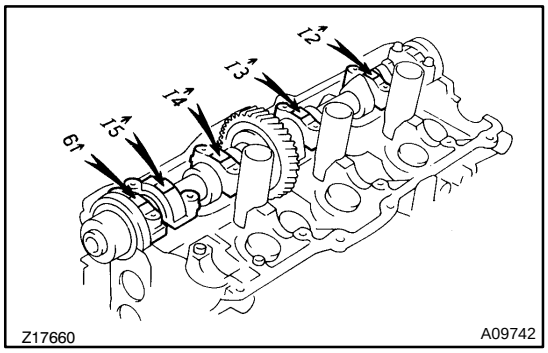

(7) Install the 5 bearing caps in their proper locations.

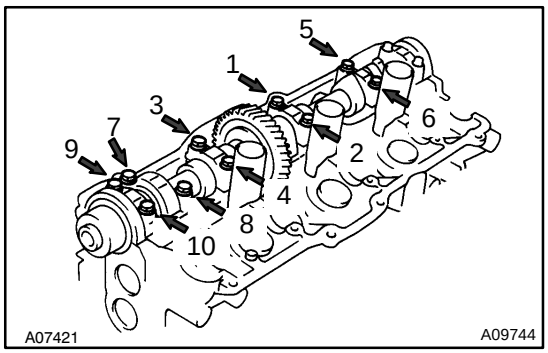

(8) Apply a light coat of engine oil on the threads and under the heads of the bearing cap bolts.
(9) Install and uniformly tighten the 10 bearing cap bolts, in several passes, in the sequence shown.

Torque: 16 N·m (160 kgf·cm, 12 ft·lbf)

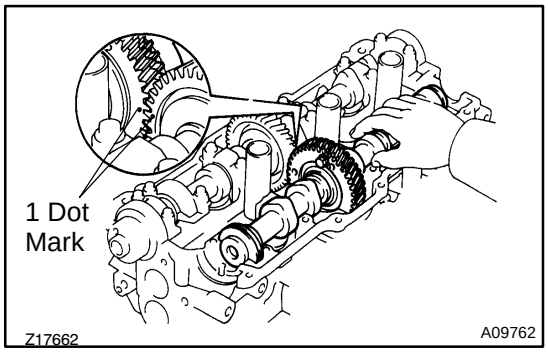

(d) Install the exhaust camshaft of the LH cylinder head.
(1) Apply new engine oil to the thrust portion and journal of the camshaft.
(2) Align the timing marks (1 dot mark) of the camshaft drive and driven gears.
(3) Place the exhaust camshaft on the cylinder head.

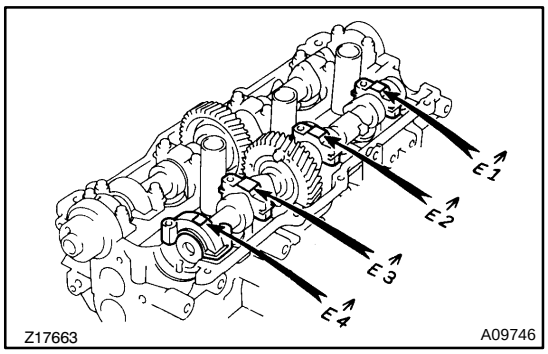

(4) Install the 4 bearing caps in their proper locations.

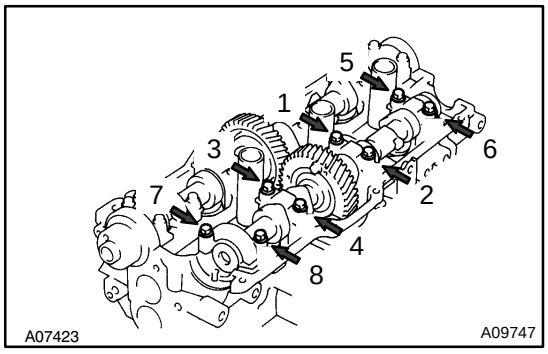

(5) Apply a light coat of engine oil on the threads and under the heads of bearing cap bolts.

(6) Install and uniformly tighten the 8 bearing cap bolts, in several passes, in the sequence shown.

Torque: 16 N·m (160 kgf·cm, 12 ft·lbf)

(7) Remove the service bolt.

6. CHECK AND ADJUST VALVE CLEARANCE (See page EM–4)

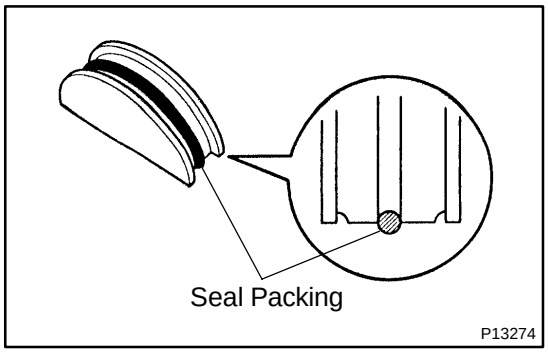

7. INSTALL SEMI–CIRCULAR PLUGS

(a) Remove any old packing (FIPG) material.

(b) Apply seal packing to the semi–circular plug groove.

Seal packing: Part No. 08826–00080 or equivalent

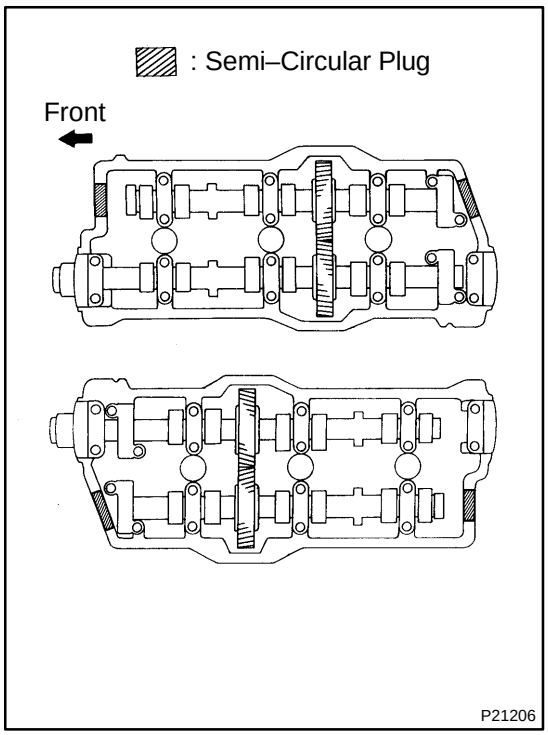

(c) Install the 4 semi–circular plugs to the cylinder heads.

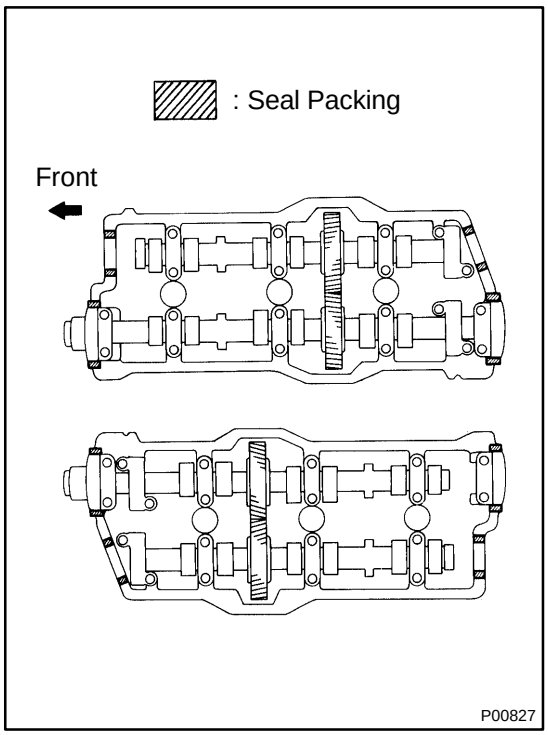

8. INSTALL CYLINDER HEAD COVERS

(a) Apply seal packing to the cylinder heads as shown in the illustration.

Seal packing: Part No. 08826–00080 or equivalent

(b) Install the gasket to the cylinder head cover.

(c) Install the cylinder head cover with the 8 bolts. Uniformly tighten the bolts in several passes. Install the 2 cylinder head covers.

Torque: 6 N·m (60 kgf·cm, 53 in.·lbf)

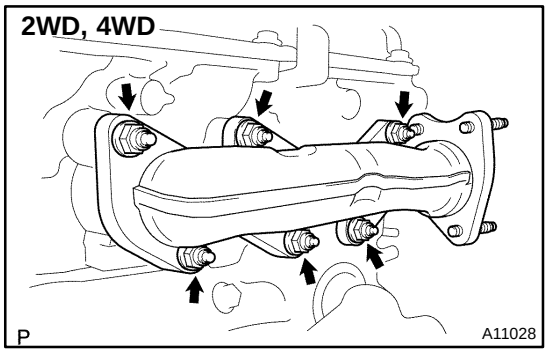

9. INSTALL EXHAUST MANIFOLDS

Install 2 new gaskets and the 2 exhaust manifolds with the 12 nuts.

Torque: 40 N·m (400 kgf·cm, 30 ft·lbf)

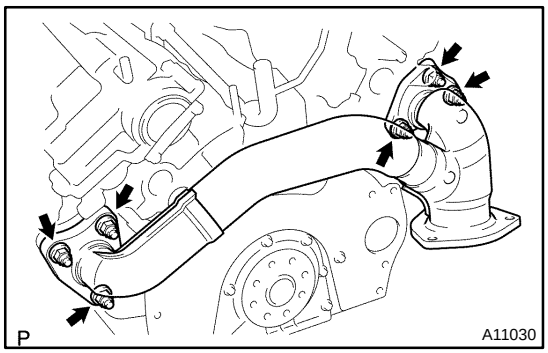

10. INSTALL EXHAUST CROSSOVER PIPE

Install 2 new gaskets and the crossover pipe with the 6 nuts.

Torque: 45 N·m (450 kgf·cm, 33 ft·lbf)

11. INSTALL PS PUMP BRACKET

Torque: 18.5 N·m (185 kgf·cm, 14 ft·lbf)

12. INSTALL GENERATOR BRACKET

Torque: 18.5 N·m (185 kgf·cm, 14 ft·lbf)

13. INSTALL GENERATOR (See page CH–15)

14. INSTALL NO.3 TIMING BELT COVER

(a) Check that the timing belt cover gaskets have no cracks or peeling, etc.

If the gaskets have cracks or peeling etc., replace them using these steps:

(1) Using a screwdriver and gasket scraper, remove all the old gasket material.

(2) Thoroughly clean all components to remove all the loose material.

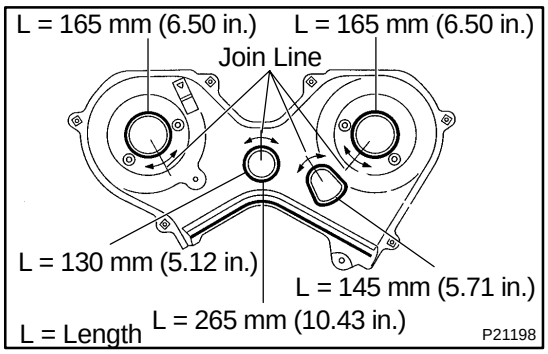

(3) Remove the backing paper from a new gasket and install the gasket evenly to the part of the timing belt cover shaded black in the illustration.

(b) Install the timing belt cover with the 6 bolts.
Torque: 9 N·m (90 kgf·cm, 80 in.·lbf)

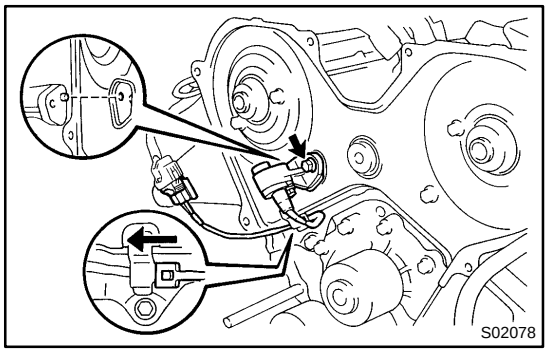

15. INSTALL CAMSHAFT POSITION SENSOR

(a) Install the camshaft position sensor with the bolt.
Torque: 8 N·m (80 kgf·cm, 71 in.·lbf)

HINT:
Match the protrusion of the sensor with the indentation of the RH cylinder head.

(b) Connect the clamp to the No.3 timing belt cover.

(c) Connect the camshaft position sensor connector.

16. INSTALL TIMING BELT (See page EM–19)

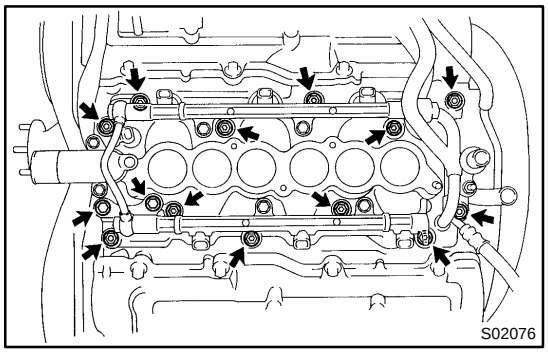

17. INSTALL INTAKE MANIFOLD ASSEMBLY

(a) Install 2 new gaskets and the intake manifold assembly with the 8 bolts, 4 plate washers and 4 nuts.
Torque: 18 N·m (180 kgf·cm, 13 ft·lbf)

(b) Install the intake manifold stay with the 2 bolts.
Torque: 18 N·m (180 kgf·cm, 13 ft·lbf)

18. INSTALL FUEL PRESSURE REGULATOR (See page SF–15)

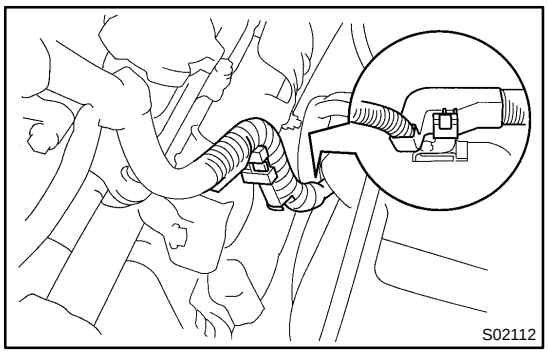

19. CONNECT ENGINE WIRE PROTECTOR

(a) Connect the 2 engine wire clamps.

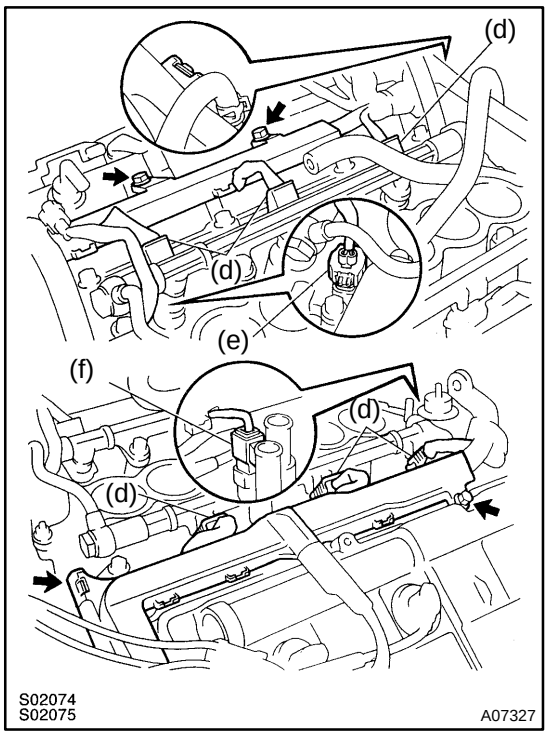

(b) Install the engine wire with the 3 bolts.
(c) Connect the 2 engine wire clamps.
(d) Connect the 6 injector connectors.
(e) Connect the ECT sensor connector.
(f) Connect the ECT sender gauge connector.

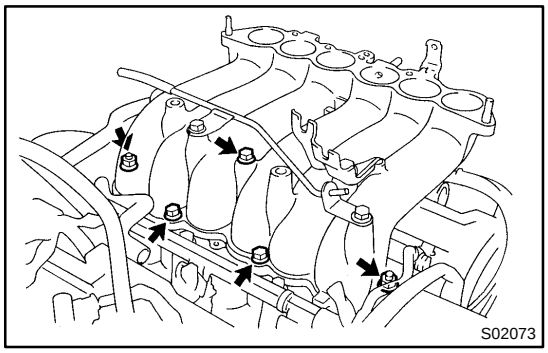

20. INSTALL INTAKE AIR CONNECTOR ASSEMBLY

(a) Install a new gasket and the intake air connectorassembly with the 3 bolts and 2 nuts.
Torque: 18 N·m (180 kgf·cm, 13 ft·lbf)

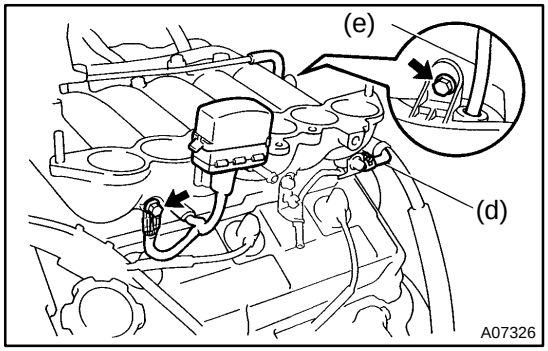

(b) Install the DLC1 to the bracket.
(c) Install the ground strap to the intake air connector with the bolt.
(d) Connect the fuel return hose.
(e) Connect the vacuum sensing hose to the fuel pressure regulator.
(f) Install the engine wire with the bolt.

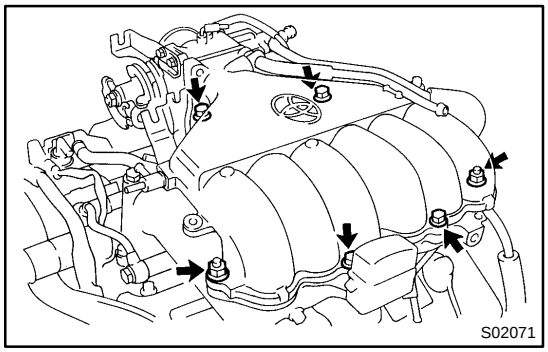

21. INSTALL AIR INTAKE CHAMBER ASSEMBLY

(a) Install a new gasket and the air intake chamber assembly with the 4 bolts and 2 nuts.
Torque: 18 N·m (180 kgf·cm, 13 ft·lbf)

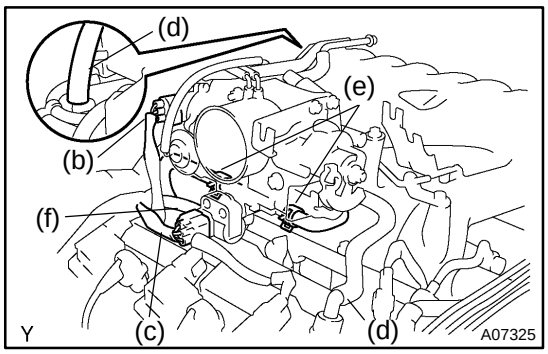

(b) Connect the throttle position sensor connector.
(c) Connect the IAC valve connector.
(d) Connect the 2 PCV hoses.
(e) Connect the 2 water bypass hoses.
(f) Connect the air assist hose to the throttle body.

22. INSTALL NO.2 TIMING BELT COVER (See page EM–19)

23. INSTALL AIR INTAKE CHAMBER STAY

(a) Install the air intake chamber stay with the 2 bolts.
Torque: 40 N·m (400 kgf·cm, 30 ft·lbf)
(b) Install the No.1 throttle cable clamp with the 2 bolts.

24. CONNECT HOSES

(a) Connect the fuel return hose.
(b) Connect the fuel inlet hose.
(c) Connect the brake booster vacuum hose.
(d) Connect the EVAP hose.
(e) 4WD:
Connect the A.D.D. vacuum hose.

25. CONNECT CABLES

(a) A/T:
Connect the throttle cable.
(b) Connect the accelerator cable.
(c) w/ Cruise Control:
Connect the cruise control actuator cable.

26. INSTALL SPARK PLUGS AND HIGH–TENSION CORDS WITH IGNITION COILS (See page IG–7)

27. CONNECT HEATER HOSE

28. INSTALL AIR CLEANER ASSEMBLY

29. 2WD, 4WD:
INSTALL NO.1 EXHAUST PIPE (WITH TWC) (See page EM–105)

30. FILL WITH ENGINE COOLANT

31. START ENGINE AND CHECK FOR LEAKS

32. CHECK IGNITION TIMING (See page EM–9)

33. INSTALL ENGINE UNDER COVER

34. PERFORM ROAD TEST

Check for abnormal noise, shock, slippage, correct shift points and smooth operation.

35. RECHECK ENGINE COOLANT LEVEL

EM0ZY–02

REASSEMBLY

HINT:

- Thoroughly clean all parts to be assembled.
- Before installing the parts, apply new engine oil to all sliding and rotating surfaces.
- Replace all gaskets and oil seals with new ones.

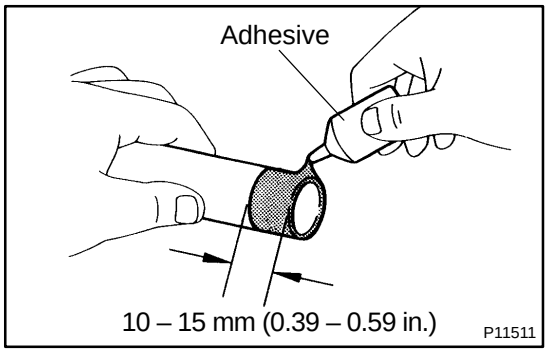

1. INSTALL SPARK PLUG TUBES

HINT:

When using a new cylinder head, spark plug tubes must be installed.

(a) Apply adhesive to the end of a spark plug tube.
Adhesive:
Part No. 08833–00070, THREE BOND 1324 or equivalent

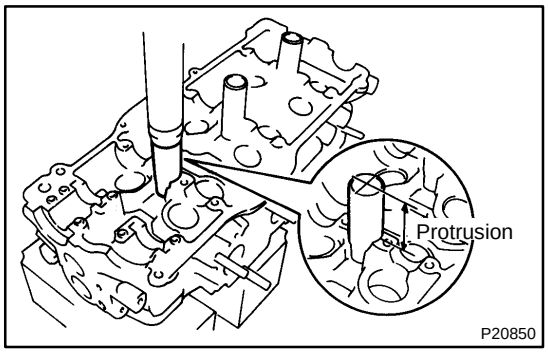

(b) Using a press, press in the spark plug tube until there is 49.0 – 49.4 mm (1.929 – 1.945 in.) protruding from the camshaft bearing cap installation surface of the cylinder head.

NOTICE:
Avoid pressing the spark plug tube in too far by measuring the amount of the protrusion while pressing.

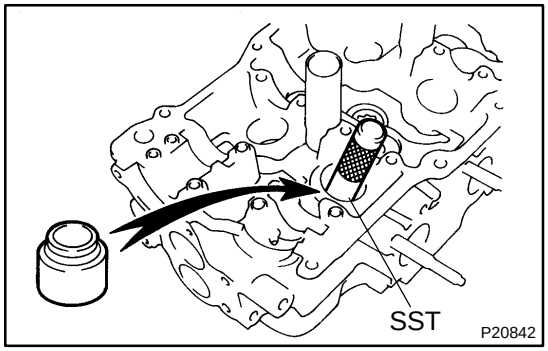

2. INSTALL VALVES

(a) Using SST, push in a new oil seal.
SST 09201–41020

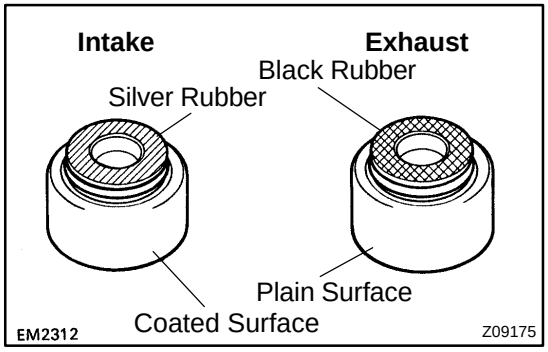

HINT:

The intake valve oil seal is silver and the exhaust valve oil seal is black.

(b) Install the valve, spring seat, valve spring and spring retainer.

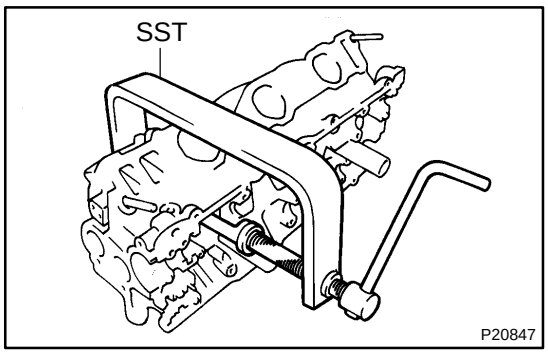

(c) Using SST, compress the valve spring and place the 2 keepers around the valve stem.
SST 09202–70020

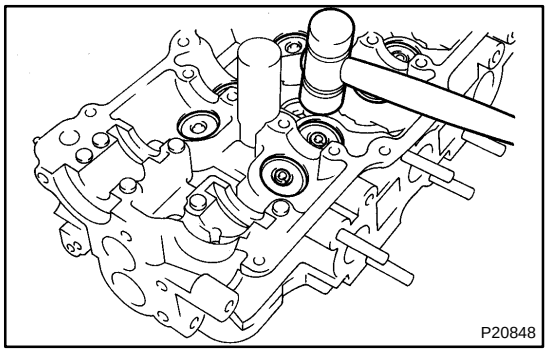

(d) Using a plastic–faced hammer, lightly tap the valve stem tip to ensure a proper fit.

3. INSTALL VALVE LIFTERS AND SHIMS

(a) Install the valve lifter and shim.

(b) Check that the valve lifter rotates smoothly by hand.

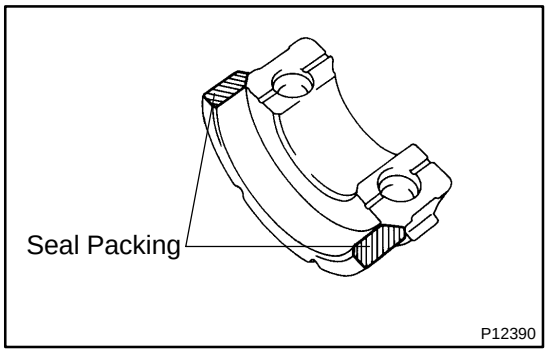

4. INSTALL CAMSHAFT HOUSING PLUGS

(a) Remove any old packing (FIPG) material.

(b) Apply seal packing to the bearing cap as shown in the illustration.
Seal packing: Part No. 08826–00080 or equivalent

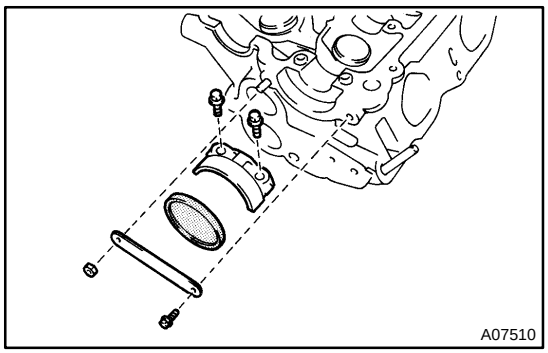

(c) Place a new housing plug in position on the cylinder head, facing the cup side inward.

(d) Install the camshaft bearing cap with the 2 bolts.
Torque: 16 N·m (160 kgf·cm, 12 ft·lbf)

(e) Install the rear plate with the bolt and nut.
Torque: 8 N·m (80 kgf·cm, 71 in.·lbf)

EM16D–03

REMOVAL

1. **REMOVE ENGINE UNDER COVER**
2. **DRAIN ENGINE COOLANT**
3. **2WD, 4WD:**
   REMOVE NO.1 EXHAUST PIPE (WITH TWC)
   (See page EM–105)
4. **DISCONNECT HEATER HOSE**
5. **REMOVE AIR CLEANER ASSEMBLY**
6. **REMOVE HIGH–TENSION CORDS WITH IGNITION COILS AND SPARK PLUGS (See page IG–7)**

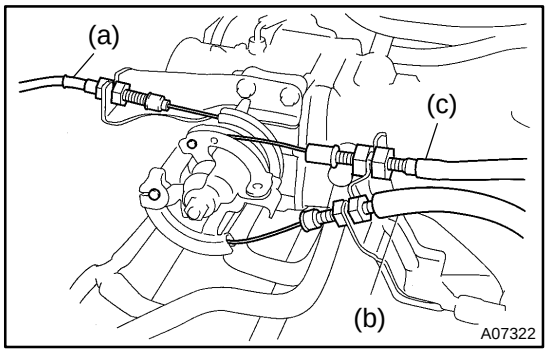

7. **DISCONNECT CABLES**

(a) w/ Cruise Control:
Disconnect the cruise control cable.

(b) Disconnect the accelerator cable.

(c) A/T:
Disconnect the throttle cable.

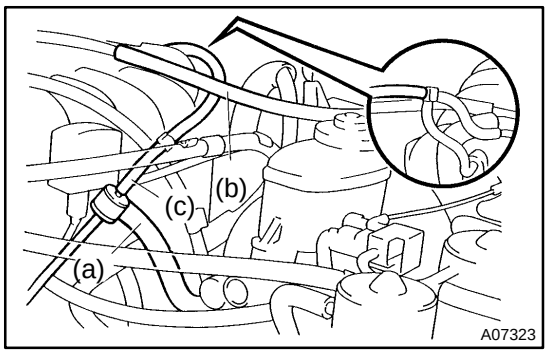

8. **DISCONNECT HOSES**

(a) Disconnect the brake booster hose.

(b) Disconnect the EVAP hose.

(c) 4WD:
Disconnect the A.D.D. vacuum hose.

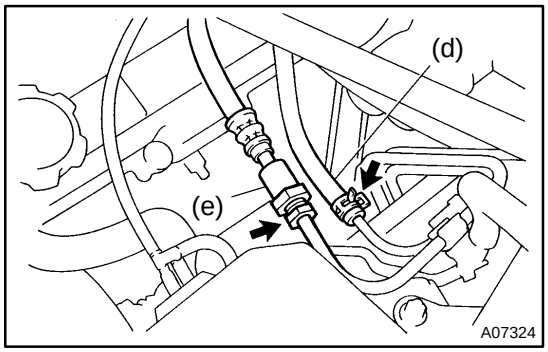

(d) Disconnect the fuel return hose.

(e) Disconnect the fuel inlet hose.

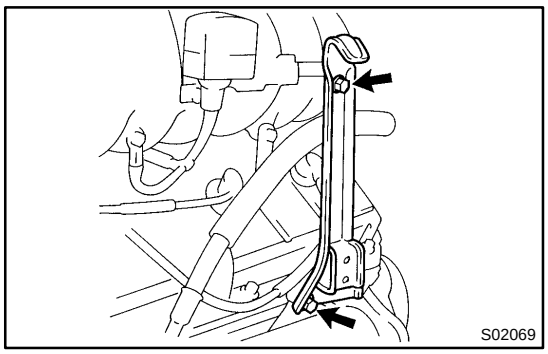

9. REMOVE INTAKE CHAMBER STAY

(a) Remove the 2 bolts and No.1 throttle cable clamp.

(b) Remove the 2 bolts and intake chamber stay.

10. REMOVE NO.2 TIMING BELT COVER (See page EM–13)

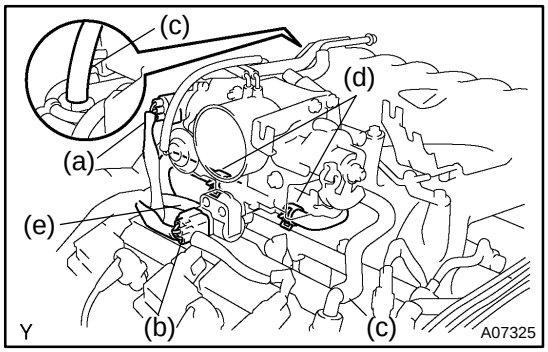

11. REMOVE AIR INTAKE CHAMBER ASSEMBLY

(a) Disconnect the throttle position sensor connector.

(b) Disconnect the IAC valve connector.

(c) Disconnect the 2 PCV hoses.

(d) Disconnect the 2 water bypass hoses.

(e) Disconnect the air assist hose from throttle body.

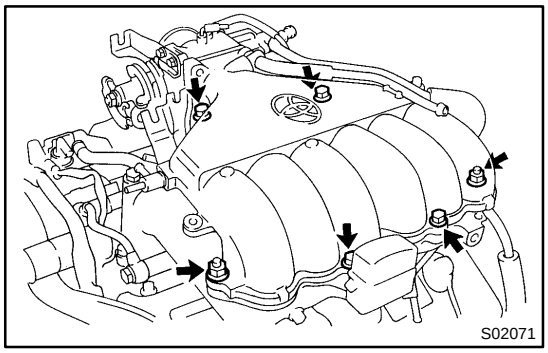

(f) Remove the 4 bolts, 2 nuts, the air intake chamber assembly and gasket.

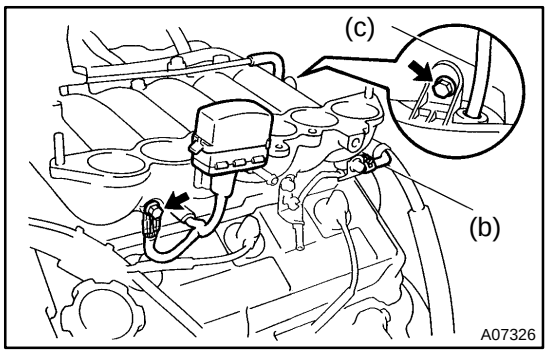

12. REMOVE INTAKE AIR CONNECTOR ASSEMBLY

(a) Remove the bolt and disconnect the engine wire.

(b) Disconnect the fuel return hose.

(c) Disconnect the vacuum sensing hose from the fuel pressure regulator.

(d) Remove the bolt and disconnect the ground strap from the intake air connector.

(e) Disconnect the DLC1 from the bracket.

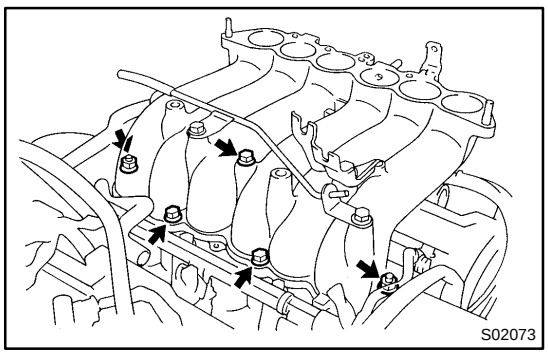

(f) Remove the 3 bolts, 2 nuts, the intake air connector assembly and gasket.

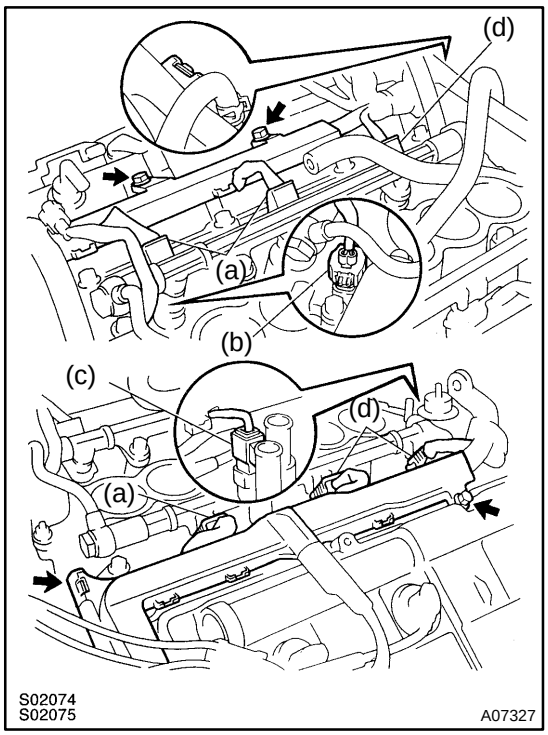

13. DISCONNECT ENGINE WIRE PROTECTOR

(a) Disconnect the 6 injector connectors.
(b) Disconnect the ECT sensor connector.
(c) Disconnect the ECT sender gauge connector.
(d) Disconnect the 2 engine wire clamps.
(e) Remove the 3 bolts, and disconnect the engine wire protector from the cylinder head.

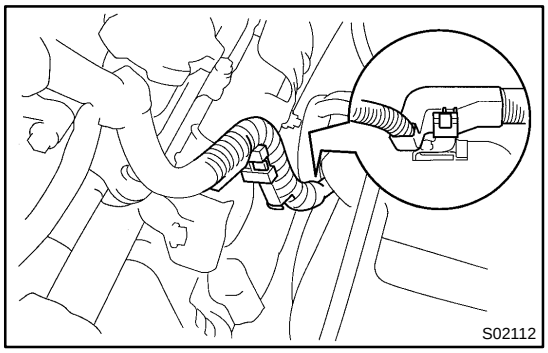

(f) Disconnect the 2 engine wire clamps from the engine.

14. REMOVE FUEL PRESSURE REGULATOR (See page SF–14)

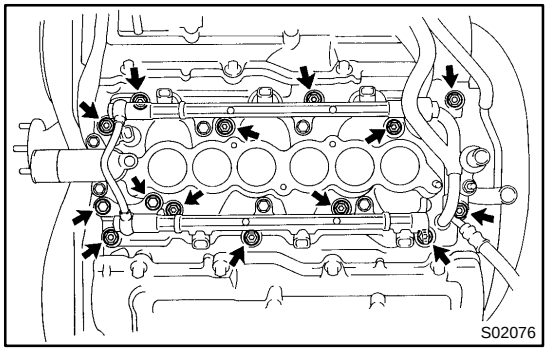

15. REMOVE INTAKE MANIFOLD ASSEMBLY

(a) Remove the 2 bolts and intake manifold stay.
(b) Remove the 8 bolts, 4 nuts, 4 plate washers, the intake manifold assembly and 2 gaskets.

16. REMOVE TIMING BELT (See page EM–13)

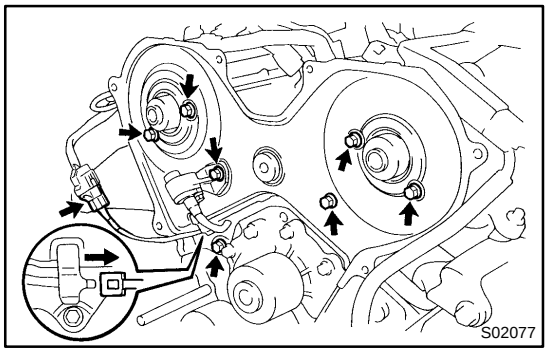

17. REMOVE CAMSHAFT POSITION SENSOR

(a) Disconnect the camshaft position sensor connector.
(b) Disconnect the clamp from the No.3 timing belt cover.
(c) Remove the bolt and camshaft position sensor.

18. REMOVE NO.3 TIMING BELT COVER

Remove the 6 bolts and timing belt cover.

19. REMOVE GENERATOR (See page CH–15)

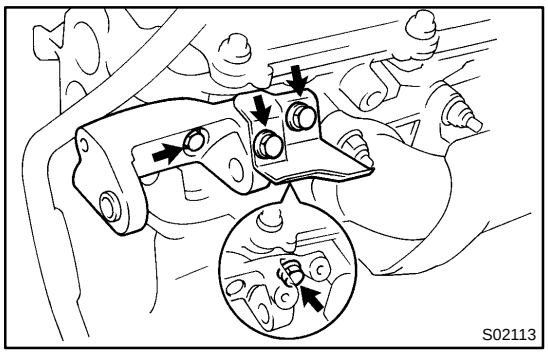

20. REMOVE GENERATOR BRACKET

(a) Remove the 2 bolts and generator bracket insulator.

(b) Remove the 2 bolts and generator bracket.

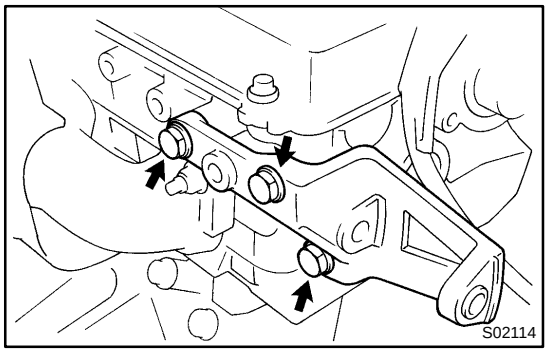

21. REMOVE PS PUMP BRACKET

Remove the 3 bolts and PS pump bracket.

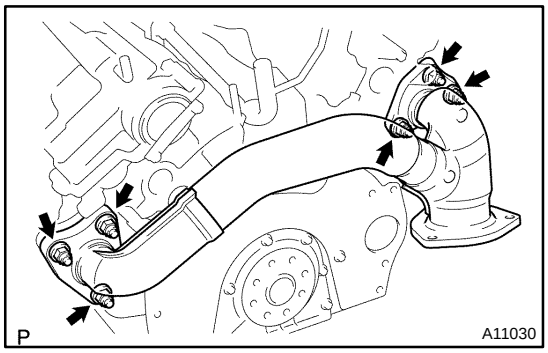

22. REMOVE EXHAUST CROSSOVER PIPE

Remove the 6 nuts, crossover pipe and 2 gaskets.

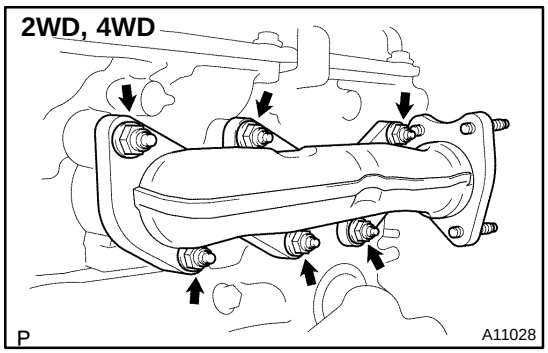

23. REMOVE EXHAUST MANIFOLDS

Remove the 12 nuts, 2 exhaust manifolds and 2 gaskets.

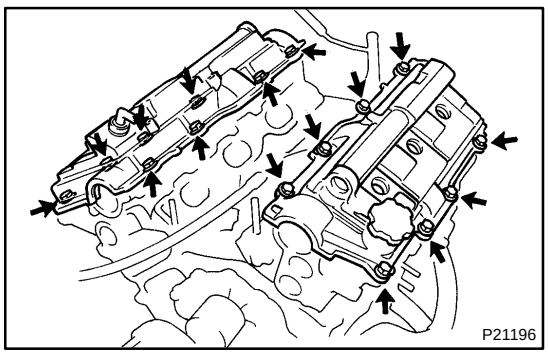

24. REMOVE CYLINDER HEAD COVERS

(a) Remove the 8 bolts, seal washers, cylinder head cover and gasket.

(b) Remove the 2 cylinder head covers.

25. REMOVE CAMSHAFTS

NOTICE:
Since the thrust clearance of the camshaft is small, the camshaft must be kept level while it is being removed. If the camshaft is not kept level, the portion of the cylinder head receiving the shaft thrust may crack or be damaged, causing the camshaft to seize or break. To avoid this, these steps should be carried out.

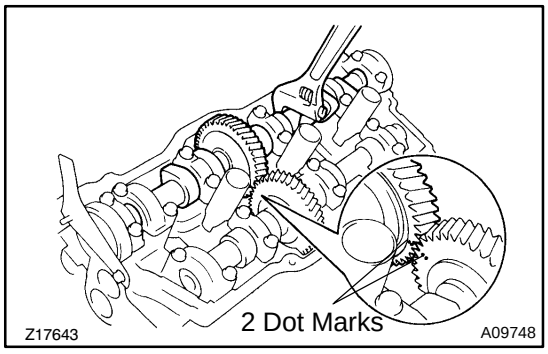

(a) Remove the exhaust camshaft of the RH cylinder head.
(1) Align the timing marks (2 dot marks) of the camshaft drive and driven gears by turning the camshaft with a wrench.

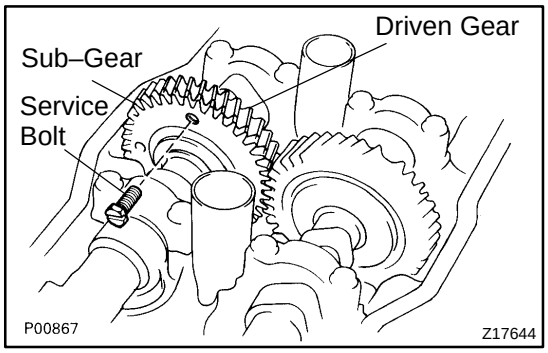

(2) Secure the exhaust camshaft sub–gear to the main gear with a service bolt.
Torque: 5.5 N·m (55 kgf·cm, 49 in.·lbf)
Recommended service bolt:

Thread diameter	6 mm
Thread pitch	1.0 mm
Bolt length	16 – 20 mm (0.63 – 0.79 in.)

NOTICE:
If the bolt is loose, the camshaft may tilt and cause damage in the camshaft and camshaft bearing cap.
HINT:
When removing the camshaft, make sure that the torsional spring force of the sub–gear has been eliminated by the above operation.

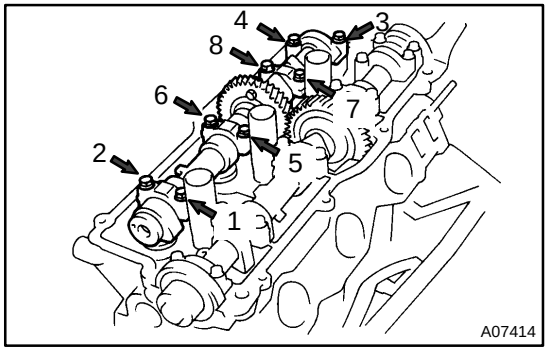

(3) Uniformly loosen and remove the 8 bearing cap bolts, in several passes, in the sequence shown.
(4) Remove the 4 bearing caps and exhaust camshaft.

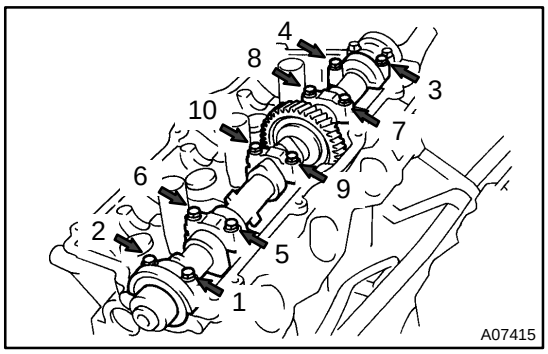

(b) Remove the intake camshaft of the RH cylinder head.
(1) Uniformly loosen and remove the 10 bearing cap bolts, in several passes, in the sequence shown.
(2) Remove the 5 bearing caps, oil seal and intake camshaft.

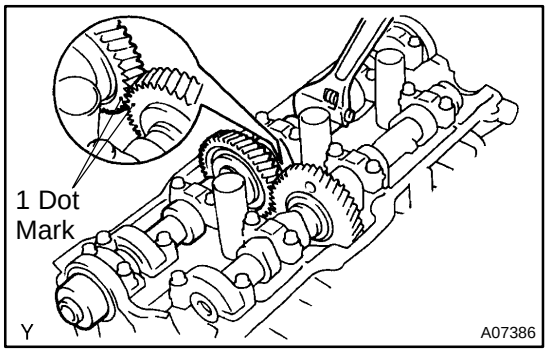

(c) Remove the exhaust camshaft of the LH cylinder head.
(1) Align the timing marks (1 dot mark) of the camshaft drive and driven gears by turning the camshaft with a wrench.

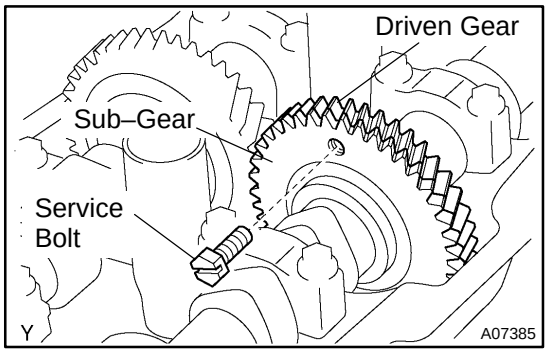

(2) Secure the exhaust camshaft sub–gear to the main gear with a service bolt.

Torque: 5.5 N·m (55 kgf·cm, 49 in.·lbf)

Recommended service bolt:

Thread diameter	6 mm
Thread pitch	1.0 mm
Bolt length	16 – 20 mm (0.63 – 0.79 in.)

NOTICE:

If the bolt is loose, the camshaft may tilt and cause damage in the camshaft and camshaft bearing cap.

HINT:

When removing the camshaft, make sure that the torsional spring force of the sub–gear has been eliminated by the above operation.

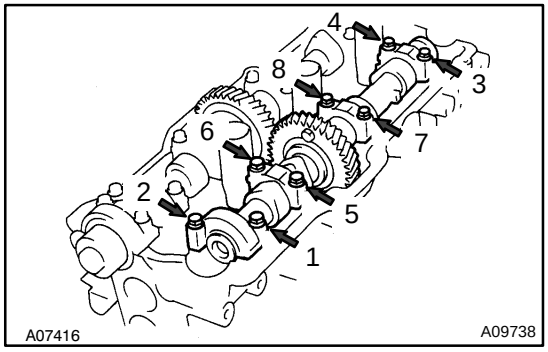

(3) Uniformly loosen and remove the 10 bearing cap bolts, in several passes, in the sequence shown.
(4) Remove the 4 bearing caps and exhaust camshaft.

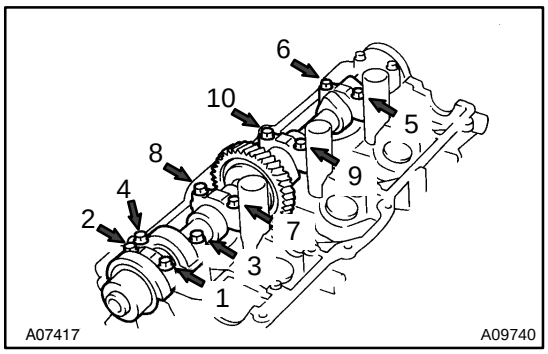

(d) Remove the intake camshaft of the LH cylinder head.
  (1) Uniformly loosen and remove the 10 bearing cap bolts, in several passes, in the sequence shown.
  (2) Remove the 5 bearing caps, oil seal and intake camshaft.

HINT:
- Arrange the camshafts in the correct order.
- Arrange the bearing caps in the correct order.

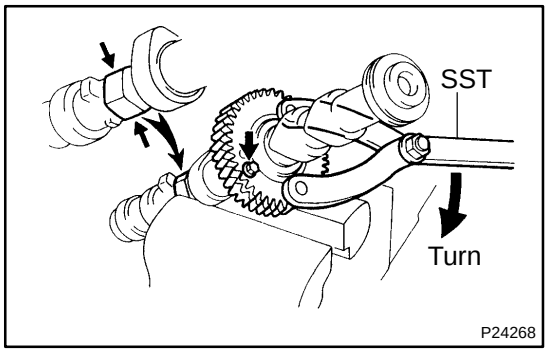

26. DISASSEMBLE EXHAUST CAMSHAFTS

(a) Mount the hexagonal wrench head portion of the camshaft in a vise.

NOTICE:

Be careful not to damage the camshaft.

(b) Using SST, turn the sub–gear clockwise and remove the service bolt.
  SST 09960–10010 (09962–01000, 09963–00600)

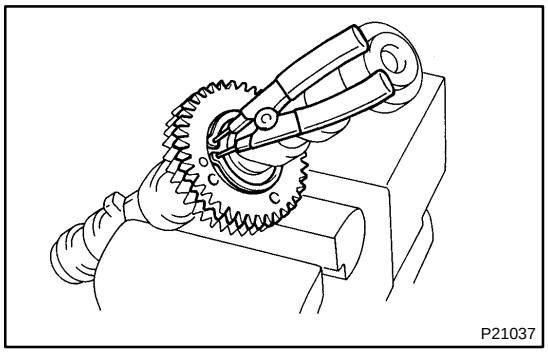

(c) Using snap ring pliers, remove the snap ring.
(d) Remove the wave washer, camshaft sub–gear and gear spring.

HINT:

Arrange the camshaft sub–gears and gear springs (RH and LH side).

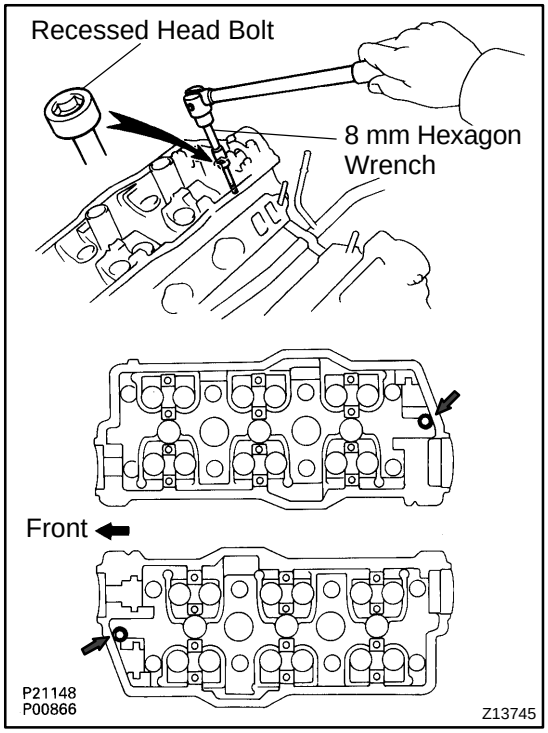

27. REMOVE CYLINDER HEADS

(a) Remove the bolt and disconnect the ground strap.
(b) Using an 8 mm hexagon wrench, remove the cylinder head (recessed head) bolt on each cylinder head, then repeat for the other side, as shown.

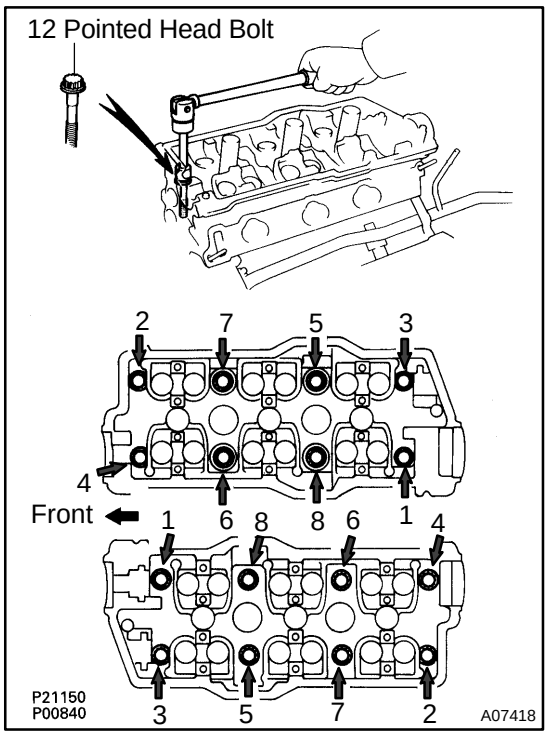

(c) Uniformly loosen and remove the 8 cylinder head (12 pointed head) bolts on each cylinder head, in several passes, in the sequence shown, then repeat for the other side, as shown. Remove the 16 cylinder head bolts and plate washers.

NOTICE:

Head warpage or cracking could result from removing bolts in an incorrect order.

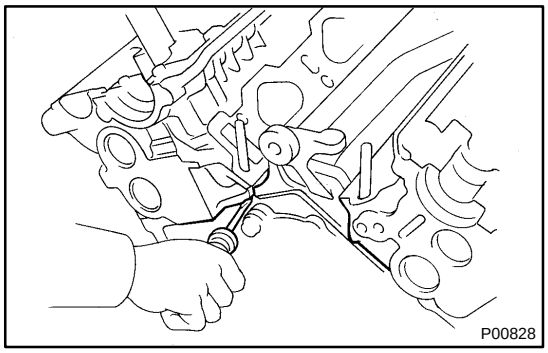

(d) Lift the cylinder head from the dowels on the cylinder block and place the 2 cylinder heads on wooden blocks on a bench.

HINT:

- If the cylinder head is difficult to lift off, pry between the cylinder head and cylinder block with a screwdriver.
- Arrange the cylinder heads in the correct order.

NOTICE:

Be careful not to damage the contact surfaces of the cylinder head and cylinder block.

EM0ZX–02

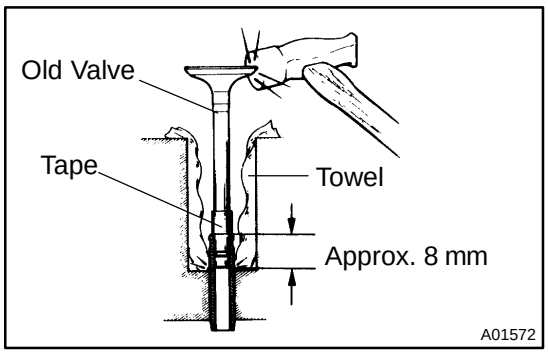

REPLACEMENT

1. REPLACE VALVE GUIDE BUSHINGS

(a) w/ Snap Ring:
Insert an old valve wrapped with tape into the valve guide bushing, and break off the valve guide bushing by hitting it with a hammer. Remove the snap ring.

HINT:

Wrap the tape approx. 8 mm (0.31 in.) from the valve stem end.

NOTICE:

Be careful not to damage the valve lifter hole.

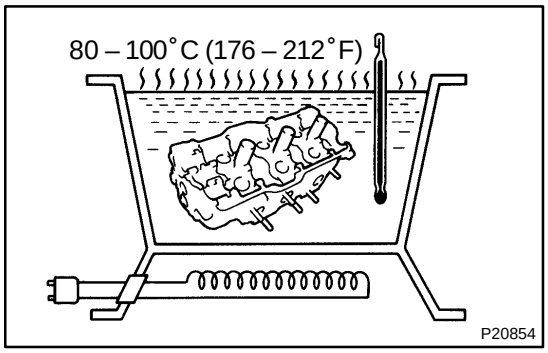

(b) Gradually heat the cylinder head to 80 – 100˚C (176 – 212˚F).

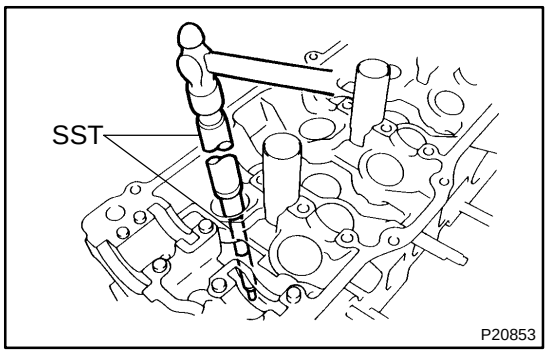

(c) Using SST and a hammer, tap out the guide bushing.
SST 09201–10000 (09201–01060),
09950–70010 (09951–07150)

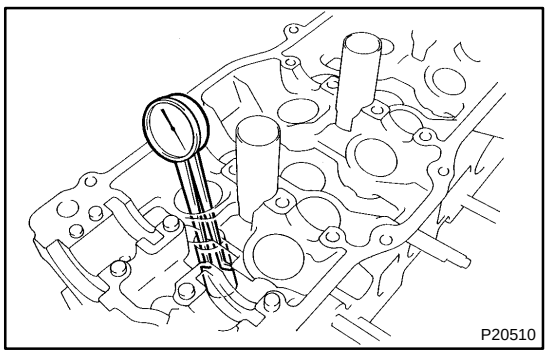

(d) Using a caliper gauge, measure the bushing bore diameter of the cylinder head.

(e) Select a new guide bushing (STD or O/S 0.05).

Both intake and exhaust

Bushing bore diameter mm (in.)	Bushing size
10.985 – 11.027 (0.4350 – 0.4341)	Use STD
11.050 – 11.077 (0.4350 – 0.4361)	Use O/S 0.05

If the bushing bore diameter of the cylinder head is greater than 11.027 mm (0.4341 in.), machine the bushing bore to these dimension:

11.050 – 11.077 mm (0.4350 – 0.4361 in.)

If the bushing bore diameter of the cylinder head is greater than 11.077 mm (0.4361 in.), replace the cylinder head.

(f) Gradually heat the cylinder head to 80 – 100°C (176 – 212°F).

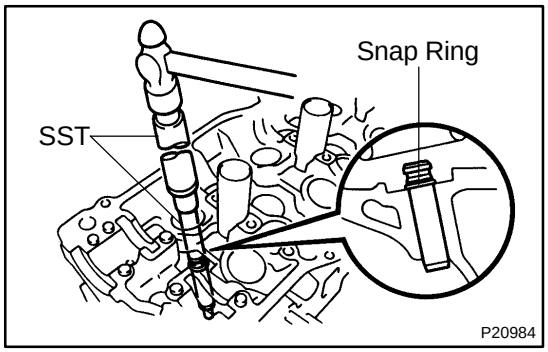

(g) Using SST and a hammer, tap in a new guide bushing until the snap ring makes contact with the cylinder head.
SST 09201–10000 (09201–01060), 09950–70010 (09951–07150)

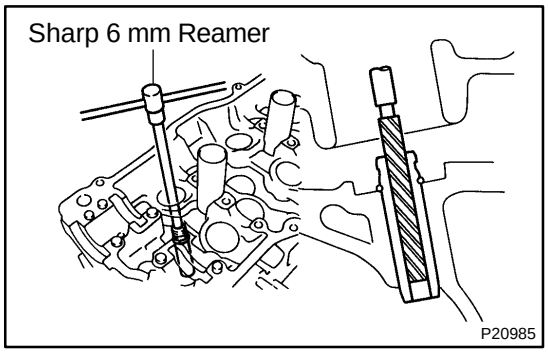

(h) Using a sharp 6 mm reamer, ream the guide bushing to obtain the standard specified clearance (See page EM–38) between the guide bushing and valve stem.

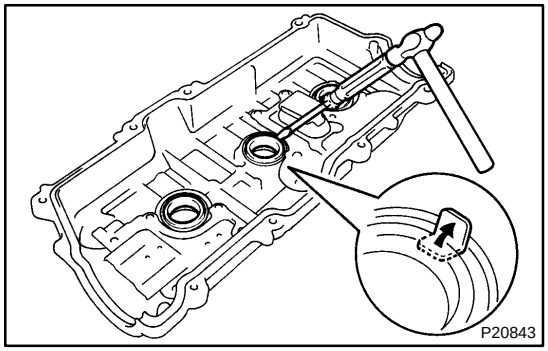

2. REPLACE SPARK PLUG TUBE GASKETS

(a) Bend up the tab on the ventilation baffle plate which prevents the gasket from the slipping out.

(b) Using a screwdriver and hammer, tap out the gasket.

NOTICE:

Do not scratch or damage the joint of the cylinder head cover.

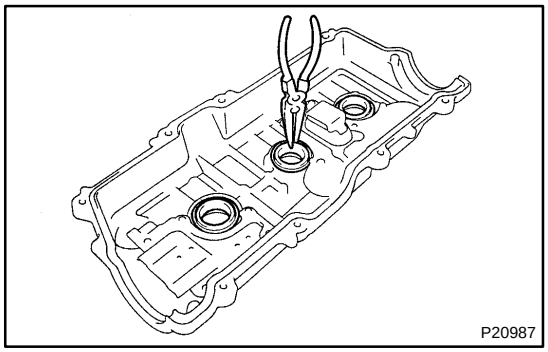

(c) Using needle–nose pliers, pry out the gasket.

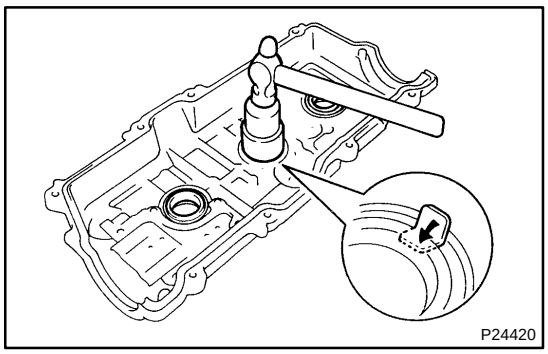

(d) Using a 32 mm socket wrench and hammer, tap in a new gasket until its surface is flush with the upper edge of the cylinder head cover.
(e) Apply a light coat of MP grease to the gasket lip.
(f) Return the ventilation plate tab to its original position.

ENGINE UNIT (2WD)

COMPONENTS

EM1N3–01

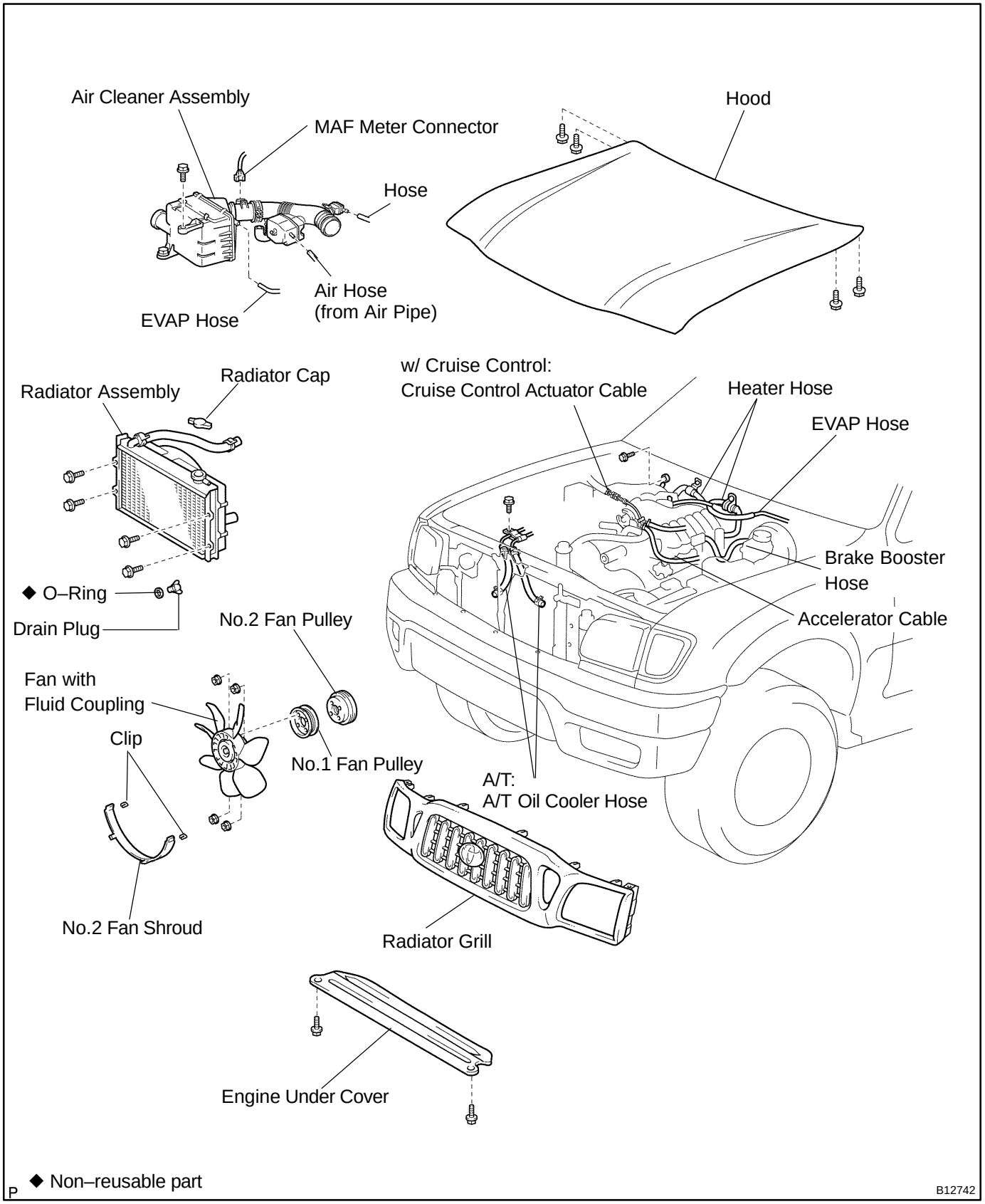

◆ Non–reusable part

B12742

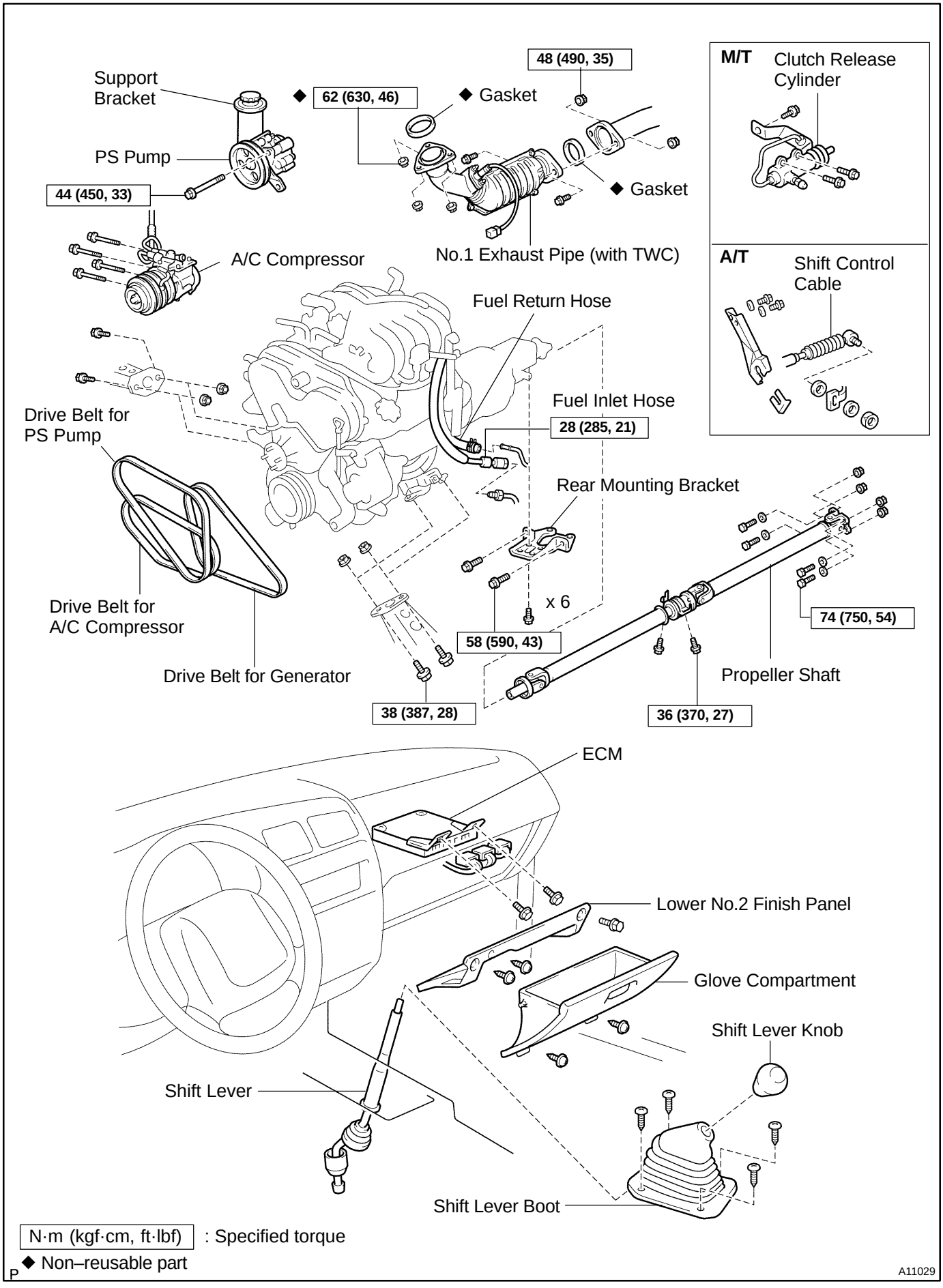
Support Bracket
PS Pump
44 (450, 33)
A/C Compressor
◆ 62 (630, 46)
◆ Gasket
48 (490, 35)
◆ Gasket
No.1 Exhaust Pipe (with TWC)
M/T
Clutch Release Cylinder
A/T
Shift Control Cable
Fuel Return Hose
Fuel Inlet Hose
28 (285, 21)
Drive Belt for PS Pump
Drive Belt for A/C Compressor
Drive Belt for Generator
Rear Mounting Bracket
x 6
58 (590, 43)
38 (387, 28)
74 (750, 54)
Propeller Shaft
36 (370, 27)
ECM
Lower No.2 Finish Panel
Glove Compartment
Shift Lever Knob
Shift Lever
Shift Lever Boot
N·m (kgf·cm, ft·lbf) : Specified torque
◆ Non–reusable part
A11029

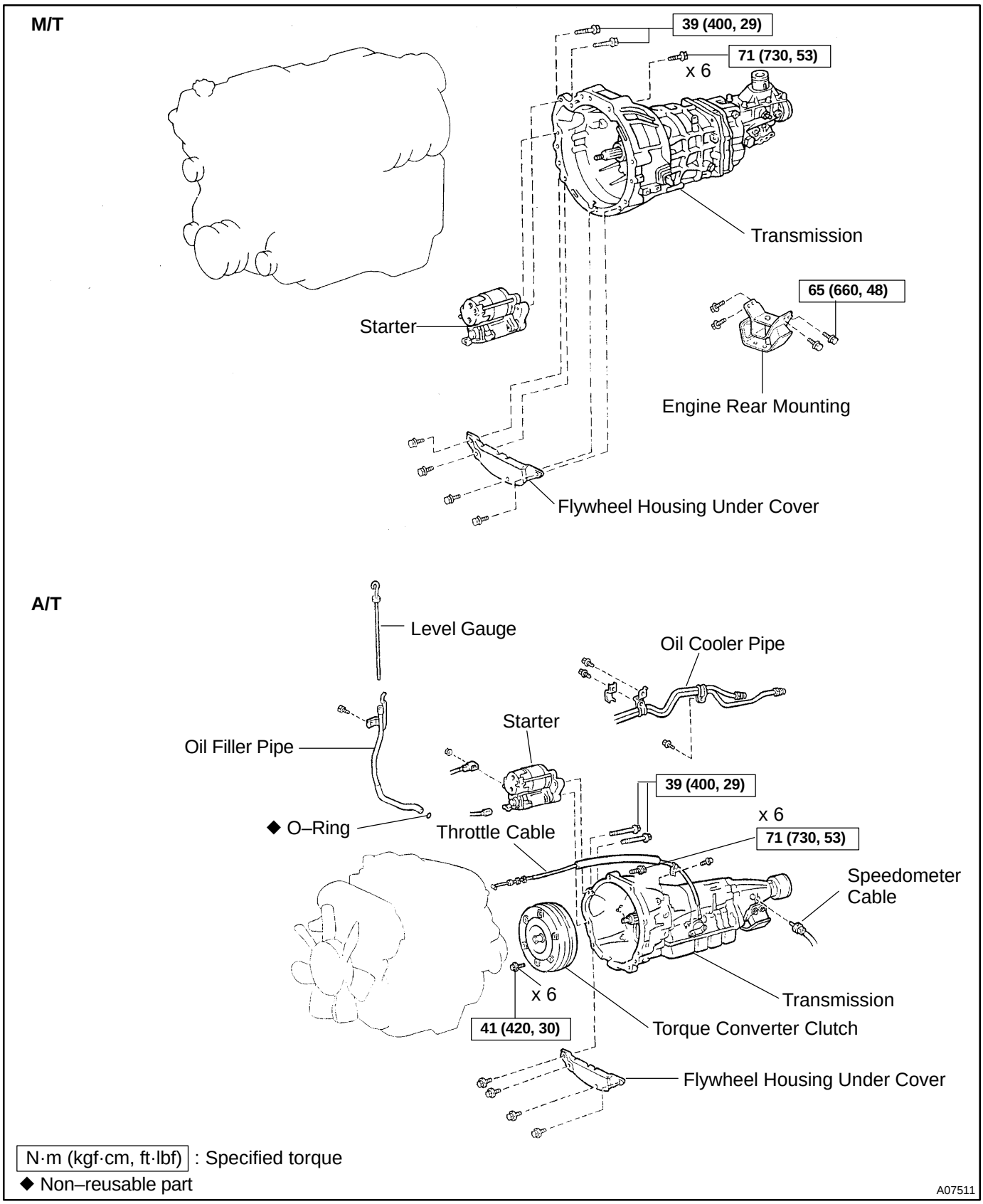
M/T
39 (400, 29)
71 (730, 53)
x 6
Transmission
65 (660, 48)
Starter
Engine Rear Mounting
Flywheel Housing Under Cover
A/T
Level Gauge
Oil Cooler Pipe
Starter
Oil Filler Pipe
39 (400, 29)
x 6
◆ O–Ring
Throttle Cable
71 (730, 53)
Speedometer Cable
x 6
Transmission
41 (420, 30)
Torque Converter Clutch
Flywheel Housing Under Cover
N·m (kgf·cm, ft·lbf) : Specified torque
◆ Non–reusable part
A07511

EM101–03

INSTALLATION

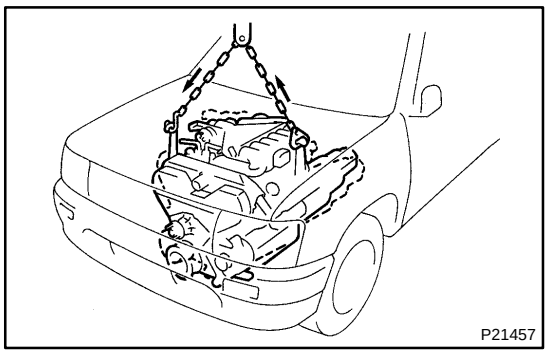

1. INSTALL TRANSMISSION TO ENGINE
(See page MT–4)

2. INSTALL ENGINE AND TRANSMISSION ASSEMBLY IN VEHICLE

(a) Attach the engine hoist chain to the engine hangers.

(b) Lower the engine and transmission assembly into the engine compartment.

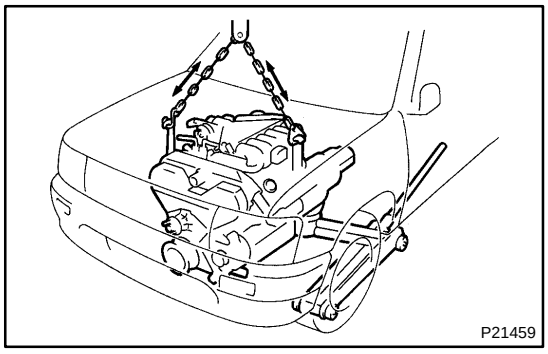

(c) Keep the engine level, and align the RH and LH mountings and body mountings.

(d) Attach the RH and LH mounting insulators to the body mountings, and temporarily install the 4 bolts and nuts.

(e) Jack up and put the transmission onto the frame.

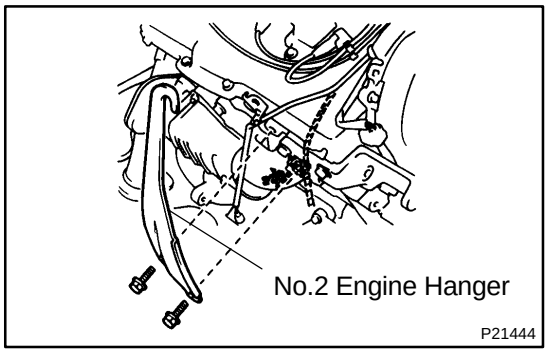

(f) Remove the engine chain hoist from the engine.

(g) Remove the 2 bolts and No.2 engine hanger.

(h) Connect the A/C compressor wire with the bolt.

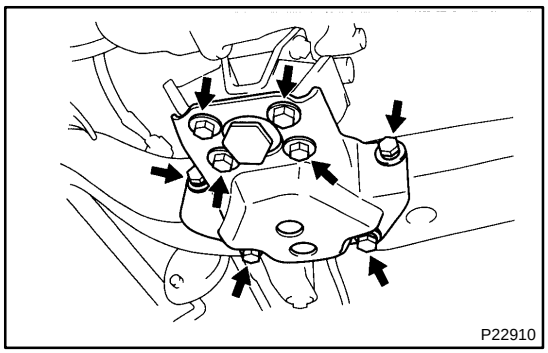

3. INSTALL ENGINE REAR MOUNTING BRACKET

(a) Raise the transmission slightly by raising the engine with a jack and a wooden block under the transmission.

(b) Install the engine rear mounting bracket to the frame.
Torque: 58 N·m (590 kgf·cm, 43 ft·lbf)

(c) Lower the transmission and rest it on the extension housing.

(d) Install the mounting bracket to the mounting insulator.
Torque: 18 N·m (183 kgf·cm, 13 ft·lbf)

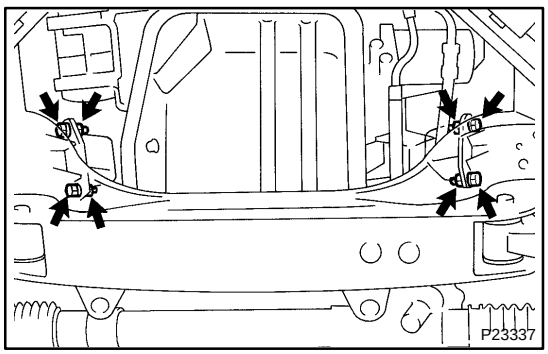

4. TIGHTEN RH AND LH ENGINE MOUNTING INSULATOR BOLTS AND NUTS

Tighten the 4 bolts and 4 nuts holding the mounting insulators to the body mountings.
Torque: 38 N·m (387 kgf·cm, 28 ft·lbf)

5. M/T:
INSTALL CLUTCH RELEASE CYLINDER

Install the clutch release cylinder with the 2 bolts.
Torque: 12 N·m (120 kgf·cm, 9 ft·lbf)

6. 2WD, 4WD:
INSTALL NO.1 EXHAUST PIPE WITH TWC (See page EM–105)
7. CONNECT SPEEDOMETER CABLE
8. INSTALL PROPELLER SHAFT (See page PR–8)
9. M/T:
INSTALL SHIFT LEVER ASSEMBLY
(a) Install a new gasket and shift lever assembly with the 6 bolts.
(b) Install the shift lever boot with the 4 screws.
(c) Install the shift lever knob.
10. CONNECT ENGINE WIRE TO CABIN
(a) Push in the engine wire through the cowl panel.
(b) Install the bolt and 2 nuts.

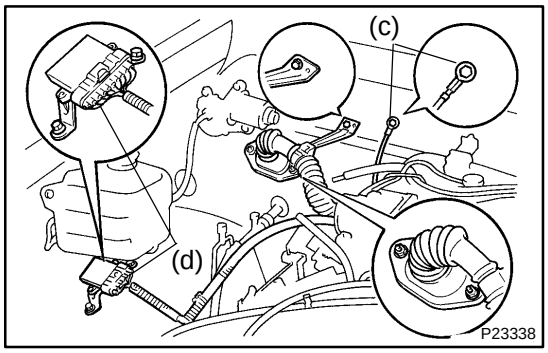

(c) Connect the ground strap.
(d) Connect the igniter connector.

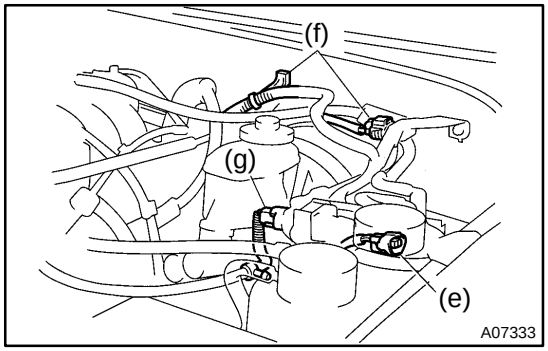

(e) Connect the VSV connector for the EVAP.
(f) Connect the vapor pressure sensor connector and clamp.
(g) Connect the VSV connector for the vapor pressure sensor.
(h) Connect the 4 ECM connectors to the ECM.
(i) Install the ECM with the 2 bolts.

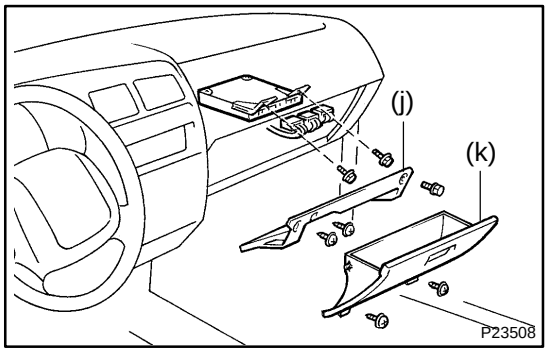

(j) Install the lower finish No.2 panel.
(k) Install the glove compartment.
11. CONNECT GENERATOR WIRE (See page CH–15)

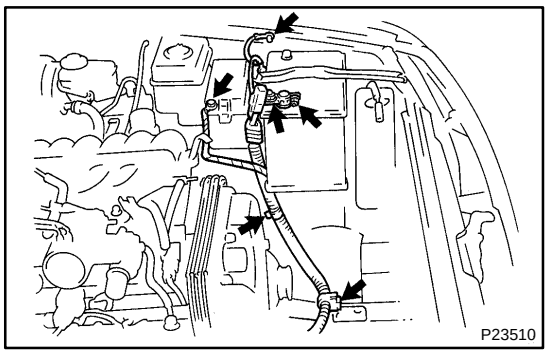

12. CONNECT STARTER WIRE AND CONNECTOR

(a) Connect the 2 starter wire clamps and connector.

(b) Install the 2 nuts, and connect the positive (+) terminal cable to the battery.

(c) Connect the ground strap with the bolt.

(d) Connect the wire from the relay block No.2 with the nut.

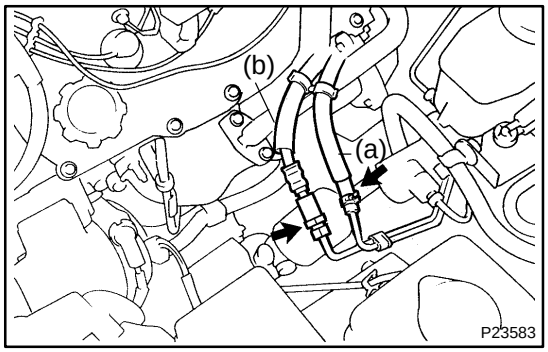

13. CONNECT HOSES

(a) Connect the fuel return hose.

(b) Connect the fuel inlet hose (See page SF–1).

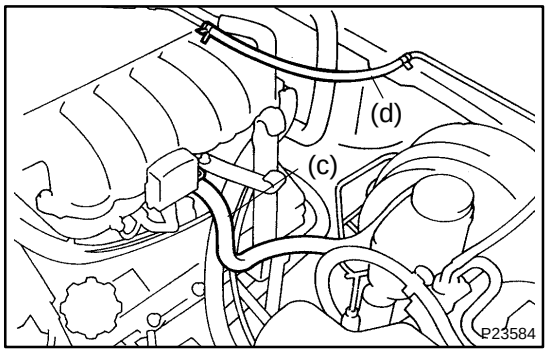

(c) Connect the brake booster vacuum hose.

(d) Connect the EVAP hose.

14. CONNECT HEATER HOSES

15. CONNECT CABLES

(a) Connect the accelerator cable.

(b) A/T:
Connect the throttle cable.

(c) w/ Cruise Control:
Connect the cruise control actuator cable.

16. INSTALL FAN WITH FLUID COUPLING AND FAN PULLEYS

17. INSTALL RADIATOR ASSEMBLY (See page CO–20)

18. INSTALL AIR CLEANER ASSEMBLY

19. FILL WITH ENGINE OIL AND COOLANT

20. FILL TRANSMISSION OIL

21. START ENGINE AND CHECK FOR LEAKS

22. CHECK IGNITION TIMING (See page EM–9)

23. INSTALL ENGINE UNDER COVER

24. INSTALL HOOD

25. ROAD TEST VEHICLE

Check for abnormal noise, shock, slippage, correct shift points and smooth operation.

26. RECHECK ENGINE COOLANT AND ENGINE OIL LEVELS

EM100–03

REMOVAL

1. REMOVE ENGINE UNDER COVER
2. DRAIN ENGINE COOLANT AND OIL
3. DRAIN TRANSMISSION OIL
4. REMOVE HOOD
5. REMOVE RADIATOR ASSEMBLY (See page CO–1)
6. DISCONNECT HEATER HOSES
7. REMOVE FAN WITH FLUID COUPLING AND FAN PULLEYS
8. REMOVE AIR CLEANER ASSEMBLY
9. DISCONNECT CABLES
(a) Disconnect the accelerator cable.
(b) A/T:
Disconnect the throttle cable.
(c) w/ Cruise Control:
Disconnect the cruise control actuator cable.

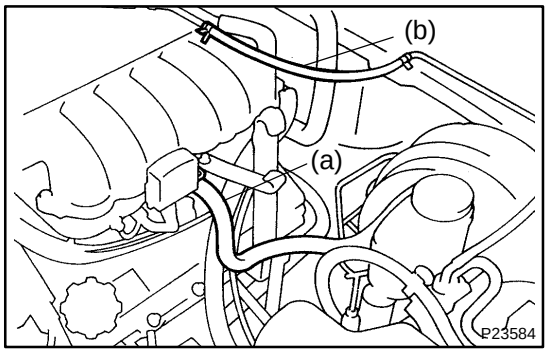

10. DISCONNECT HOSES
(a) Disconnect the brake booster vacuum hose.
(b) Disconnect the EVAP hose.

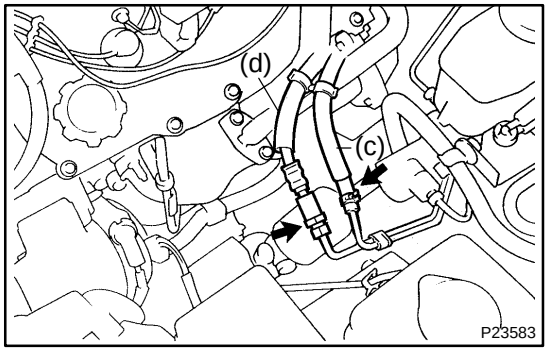

(c) Disconnect the fuel return hose.
(d) Disconnect the fuel inlet hose.

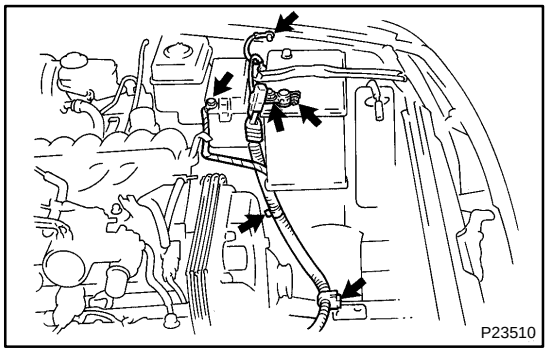

11. DISCONNECT STARTER WIRE AND CONNECTOR
(a) Remove the bolt, and disconnect the ground strap.
(b) Remove the 2 nuts, disconnect the positive (+) terminal cable from the battery.
(c) Disconnect the 2 starter wire clamps and connector.
(d) Remove the nut, and disconnect the wire from the relay block No.2.
12. DISCONNECT GENERATOR WIRE (See page CH–5)

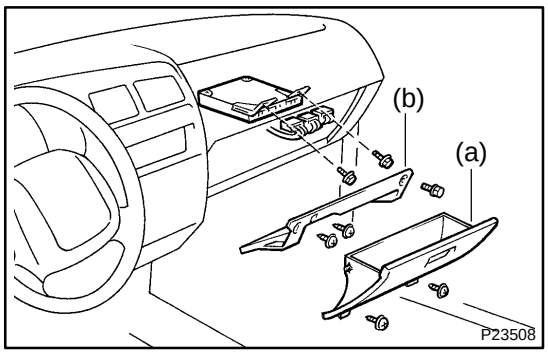

13. DISCONNECT ENGINE WIRE FROM CABIN

(a) Remove the glove compartment.
(b) Remove the lower finish No.2 panel.
(c) Remove the 2 bolts and ECM.
(d) Disconnect the 4 ECM connectors.

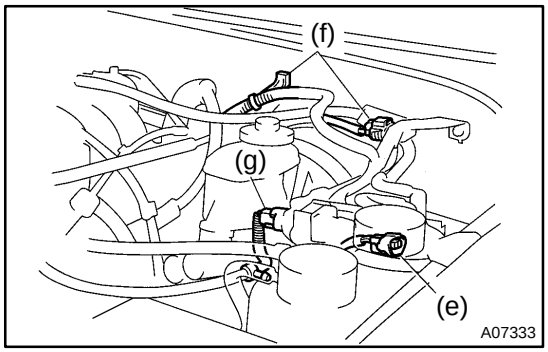

(e) Disconnect the VSV connector for the EVAP.
(f) Disconnect the vapor pressure sensor connector and clamp.
(g) Disconnect the VSV connector for the vapor pressure sensor.

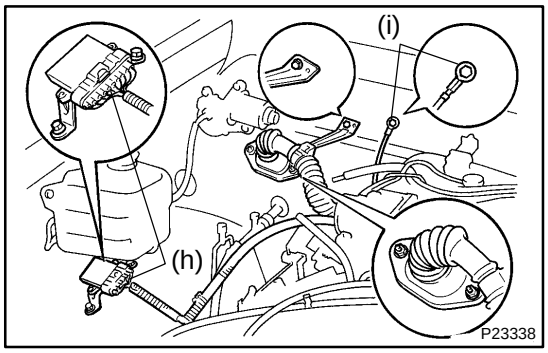

(h) Disconnect the igniter connector.
(i) Disconnect the ground strap.
(j) Remove the bolt and 2 nuts.
(k) Pull out the engine wire from the cabin.

14. M/T:
REMOVE SHIFT LEVER ASSEMBLY

(a) Remove the shift lever knob.
(b) Remove the 4 screws and shift lever boot.
(c) Remove the 6 bolts, shift lever assembly and gasket.

15. REMOVE PROPELLER SHAFT (See page PR–3)

16. DISCONNECT SPEEDOMETER CABLE

NOTICE:
Do not lose the felt protector and washers.

17. 2WD, 4WD:
NO.1 EXHAUST PIPE WITH TWC (See page EM–105)

18. M/T:
REMOVE CLUTCH RELEASE CYLINDER

Remove the 2 bolts, and disconnect the clutch clutch release cylinder.

19. PLACE JACK UNDER TRANSMISSION

20. REMOVE ENGINE REAR MOUNTING BRACKET

Remove the 8 bolts holding the mounting bracket to the mounting insulator and crossmember.

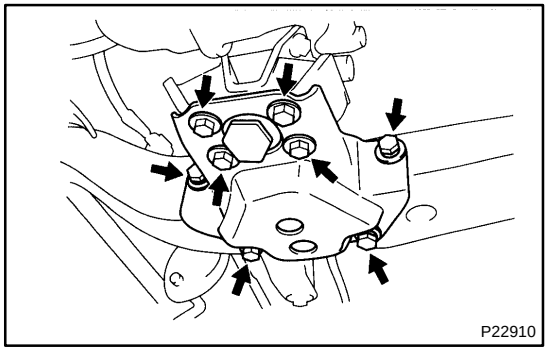

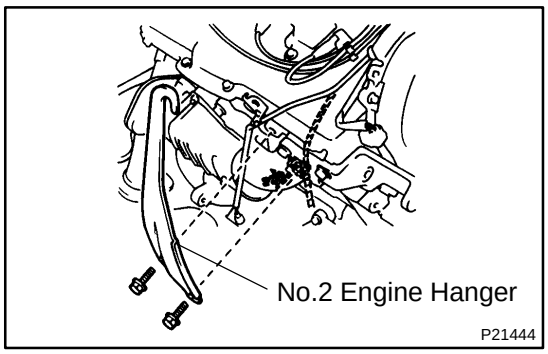

21. REMOVE ENGINE WITH TRANSMISSION

(a) w/ A/C:
Remove the bolt and disconnect the A/C compressor wire clamp.

(b) Install a No.2 engine hanger in the correct direction.
Part No.:

No.2 Engine hanger	12282 – 62030
Bolt	91512 – 61020

Torque: 40 N·m (400 kgf·cm, 30 ft·lbf)

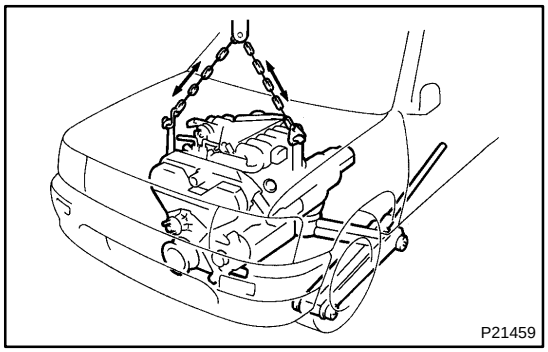

(c) Attach the engine hoist chain to the 2 engine hangers.

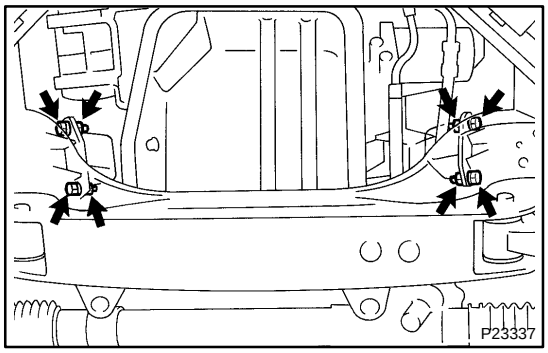

(d) Remove the 4 bolts and 4 nuts holding the engine front mounting insulators to the frame.

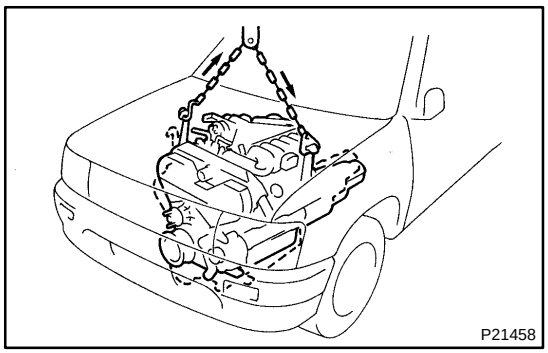

(e) Lift the engine with transmission out of the vehicle slowly and carefully.

NOTICE:

Make sure the engine is clear of all wiring and hoses.

(f) Place the engine and transmission assembly onto the stand.

22. SEPARATE ENGINE AND TRANSMISSION
(See page MT–4)

ENGINE UNIT (4WD)

EM01U–10

COMPONENTS

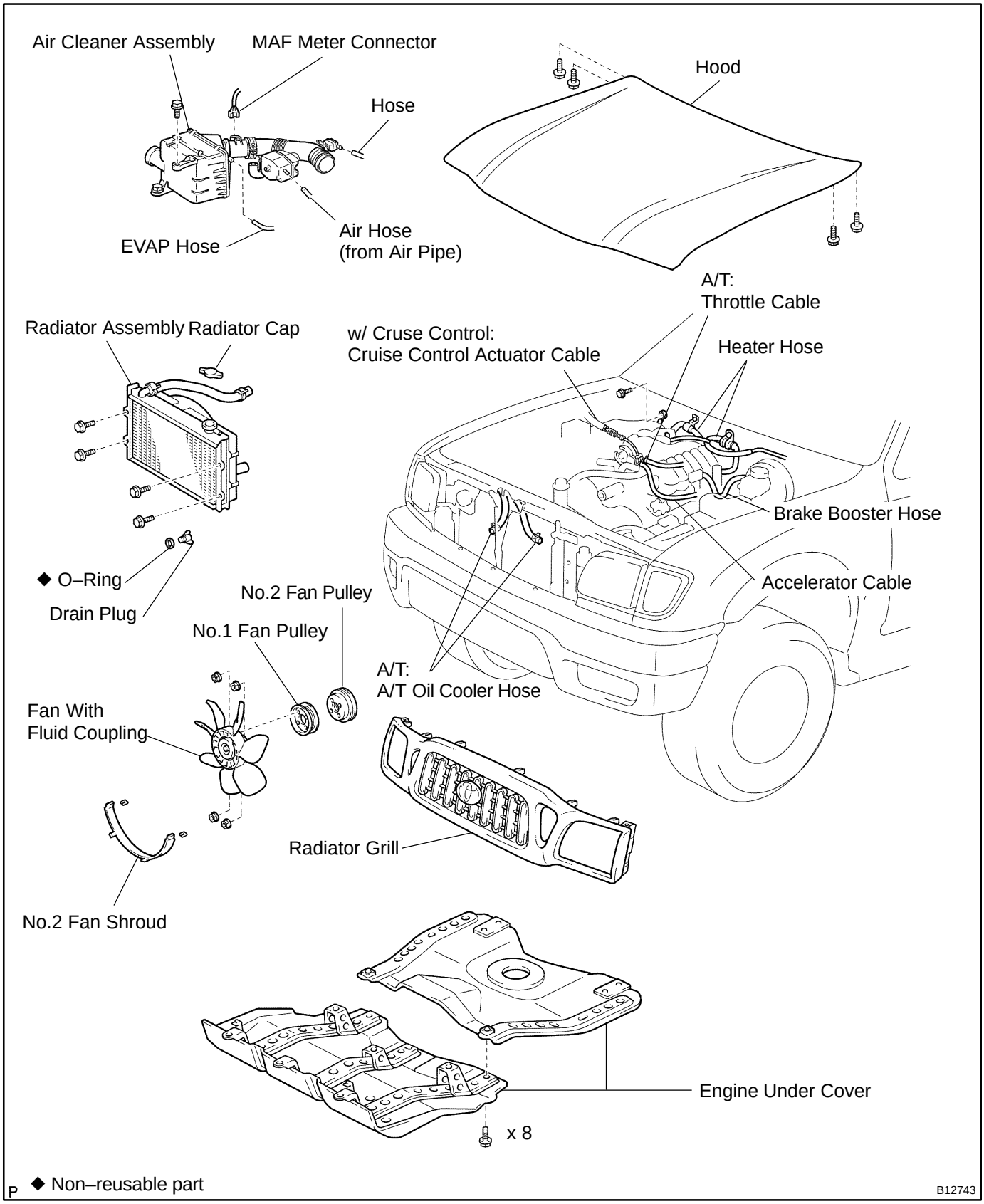

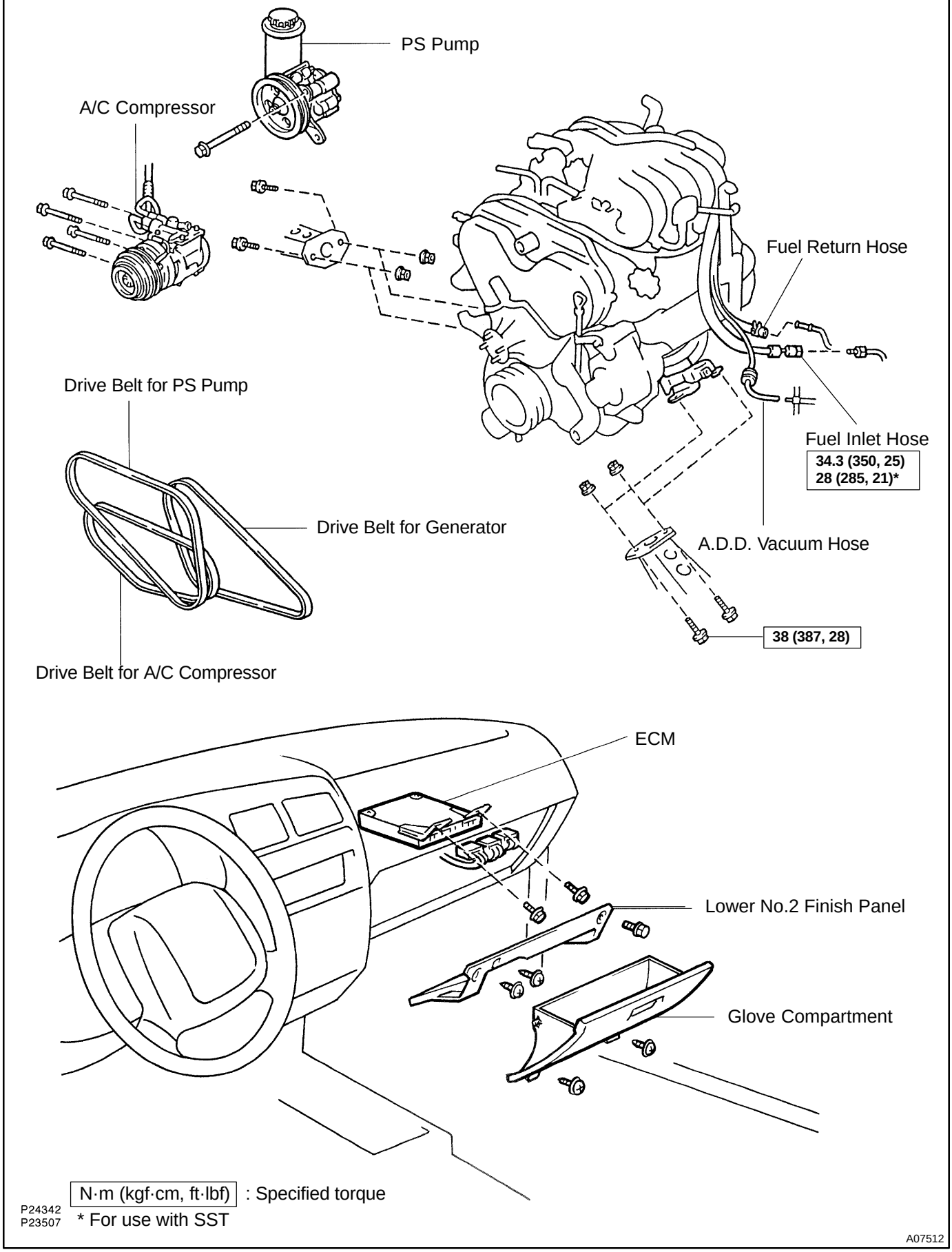
PS Pump
A/C Compressor
Fuel Return Hose
Drive Belt for PS Pump
Fuel Inlet Hose
34.3 (350, 25)
28 (285, 21)*
Drive Belt for Generator
A.D.D. Vacuum Hose
38 (387, 28)
Drive Belt for A/C Compressor
ECM
Lower No.2 Finish Panel
Glove Compartment
N·m (kgf·cm, ft·lbf) : Specified torque
* For use with SST
P24342
P23507
A07512

EM103–03

INSTALLATION

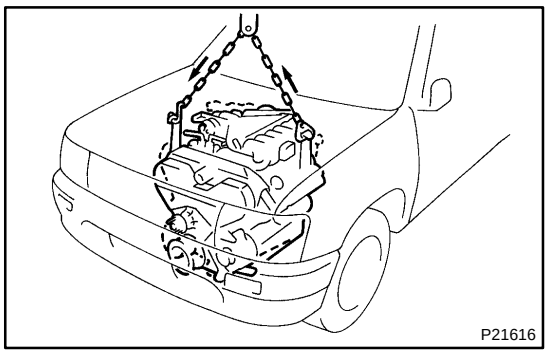

1. INSTALL ENGINE ASSEMBLY IN VEHICLE

(a) Attach the engine hoist chain to the engine hangers.
(b) Lower the engine assembly into the engine compartment.

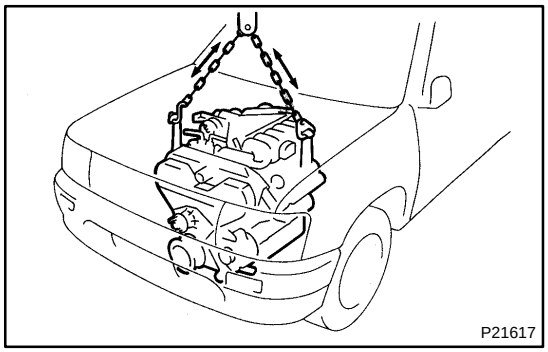

(c) Keep the engine level, and align the RH and LH mountings and body mountings.
(d) Attach the RH and LH mounting insulators to the body mountings, and temporarily install the 4 bolts and 4 nuts.

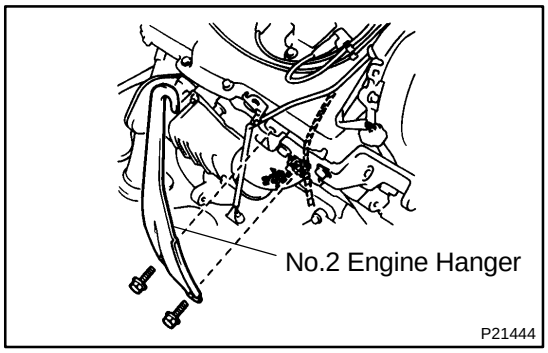

(e) Remove the engine chain hoist from the engine.
(f) Remove the 2 bolts and No.2 engine hanger.
(g) Install the bolt, and connect the A/C compressor wire.

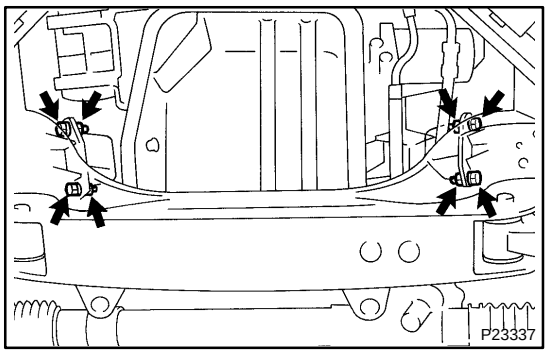

2. TIGHTEN RH AND LH ENGINE MOUNTING INSULATOR BOLTS AND NUTS

Tighten the 4 bolts and nuts holding the mounting insulators to the body mountings.

Torque: 38 N·m (387 kgf·cm, 28 ft·lbf)

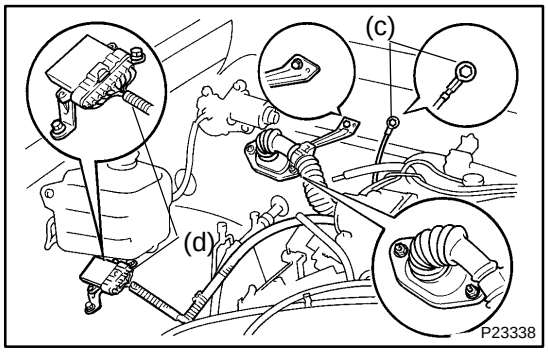

3. CONNECT ENGINE WIRE TO CABIN

(a) Push in the engine wire through the cowl panel.
(b) Install the bolt and 2 nuts.
(c) Connect the ground strap.
(d) Connect the igniter connector.

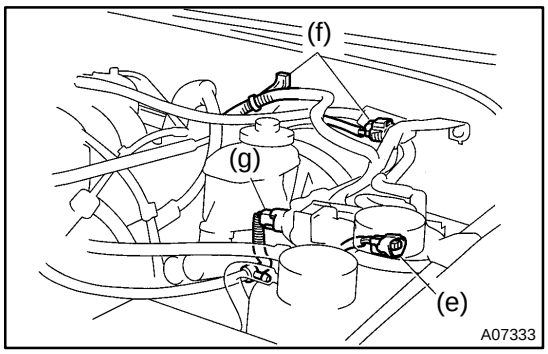

(e) Connect the VSV connector for the EVAP.
(f) Connect the vapor pressure sensor connector and clamp.
(g) Connect the VSV connector for the vapor pressure sensor.
(h) Connect the 4 connectors to the ECM.
(i) Install the ECM with the 2 bolts.

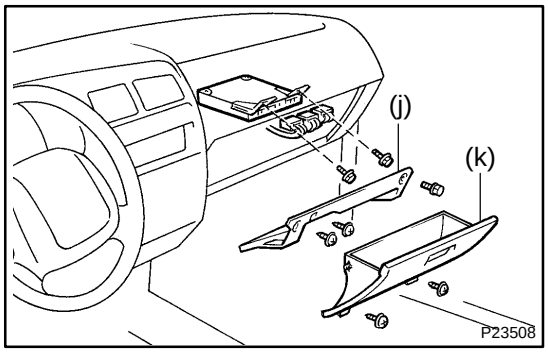

(j) Install the lower finish No.2 panel.
(k) Install the glove compartment.

4. CONNECT GENERATOR WIRE (See page CH–15)

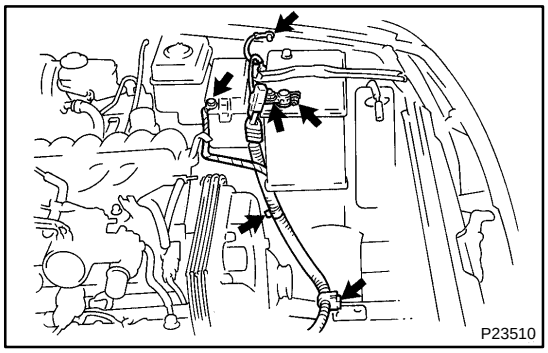

5. CONNECT STARTER WIRE AND CONNECTORS

(a) Connect the 3 starter wire clamps and connector.
(b) Install the 2 nuts, and connect the positive (+) terminal cable to the battery.
(c) Connect the ground strap with the bolt.
(d) Connect the wire to the relay block No.2 with the nut.

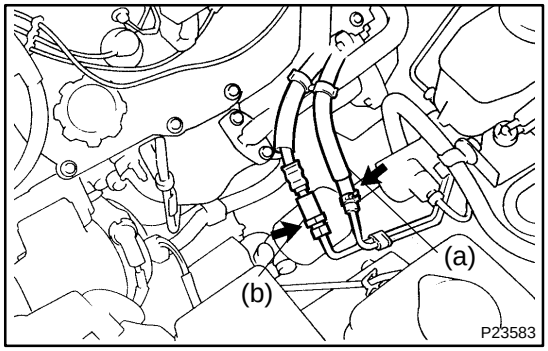

6. CONNECT HOSES

(a) Connect the fuel return hose.
(b) Connect the fuel inlet hose (See page SF–1).

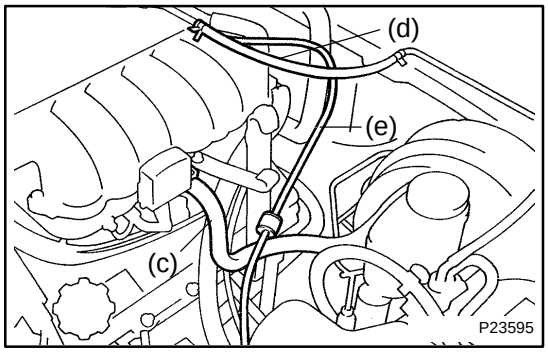

(c) Connect the brake booster vacuum hose.
(d) Connect the EVAP hose.
(e) Connect the A.D.D. vacuum hose.

7. CONNECT HEATER HOSES

8. CONNECT CABLES

(a) Connect the accelerator cable.
(b) A/T:
Connect the throttle cable.
(c) w/ Cruise Control:
Connect the cruise control actuator cable.

9. **INSTALL FAN WITH FLUID COUPLING AND FAN PULLEYS**
10. **INSTALL RADIATOR ASSEMBLY (See page CO–20)**
11. **INSTALL AIR CLEANER ASSEMBLY**
12. **FILL WITH ENGINE OIL**
13. **FILL WITH ENGINE COOLANT**
14. **INSTALL ENGINE UNDER COVER**
15. **INSTALL TRANSMISSION**
    (W59 M/T: See page MT–12)
    (R150F M/T: See page MT–11)
    (A340F: See page AT–36)
16. **INSTALL HOOD**
17. **PERFORM ROAD TEST**

Check for abnormal noise, shock, slippage, correct shift points and smooth operation.

18. **RECHECK ENGINE COOLANT AND ENGINE OIL LEVELS**

EM102–03

REMOVAL

1. REMOVE TRANSMISSION
(W59 M/T: See page MT–7)
(R150F M/T: See page MT–4)
(A340F: See page AT–24)

2. REMOVE ENGINE UNDER COVER

3. DRAIN ENGINE COOLANT AND OIL

4. REMOVE HOOD

5. REMOVE RADIATOR ASSEMBLY (See page CO–17)

6. DISCONNECT HEATER HOSES

7. DISCONNECT CABLES

(a) Disconnect the accelerator cable.

(b) A/T:
Disconnect the throttle cable.

(c) w/ Cruise Control:
Disconnect the cruise control actuator cable.

8. REMOVE FAN WITH FLUID COUPLING AND FAN PULLEYS

9. REMOVE AIR CLEANER ASSEMBLY

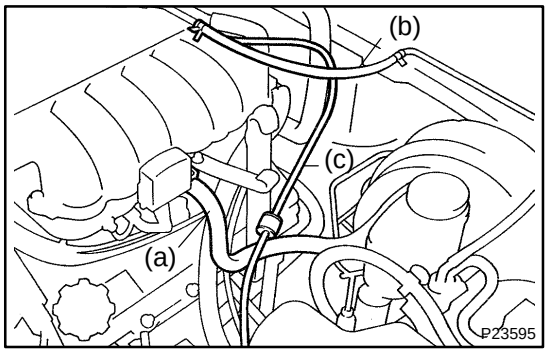

10. DISCONNECT HOSES

(a) Disconnect the brake booster vacuum hose.

(b) Disconnect the EVAP hose.

(c) Disconnect the A.D.D. vacuum hose.

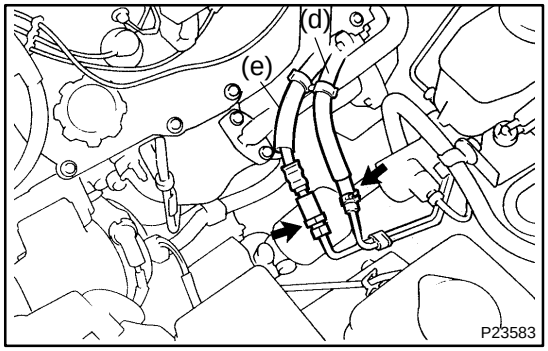

(d) Disconnect the fuel return hose.

(e) Disconnect the fuel inlet hose.

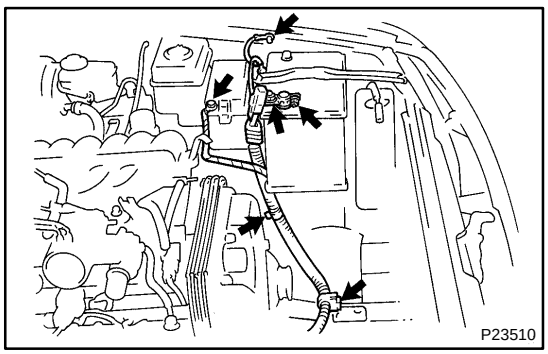

11. DISCONNECT STARTER WIRE AND CONNECTORS

(a) Remove the bolt, and disconnect the ground strap.

(b) Remove the 2 nut, and disconnect the positive (+) terminal cable from the battery.

(c) Disconnect the 2 starter the wire clamps and connector.

(d) Remove the nut, and disconnect the wire from the relay block No.2.

12. DISCONNECT GENERATOR WIRE (See page CH–5)

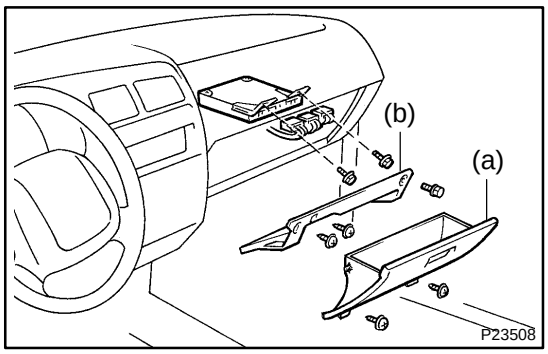

13. DISCONNECT ENGINE WIRE FROM CABIN

(a) Remove the glove compartment.
(b) Remove the lower finish No.2 panel.
(c) Remove the 2 bolts and ECM.
(d) Disconnect the 4 ECM connectors.

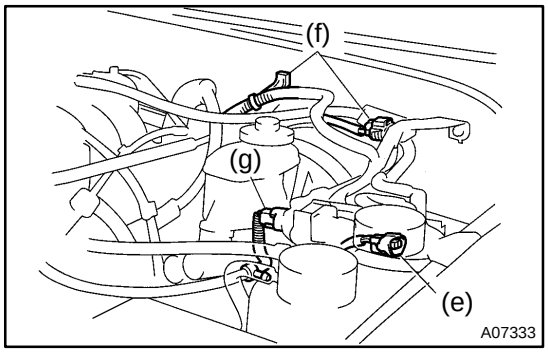

(e) Disconnect the VSV connector for the EVAP.
(f) Disconnect the vapor pressure sensor connector.
(g) Disconnect the VSV connector for the vapor pressure sensor.

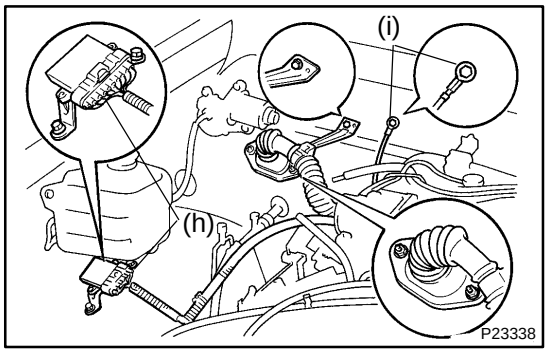

(h) Disconnect the igniter connector.
(i) Disconnect the ground strap.
(j) Remove the bolt and 2 nuts.
(k) Pull out the engine wire from the cabin.

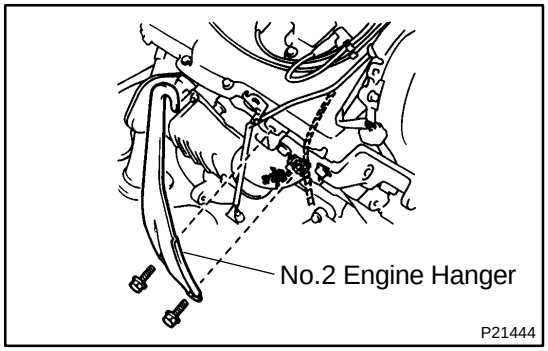

14. REMOVE ENGINE

(a) Remove the bolt and disconnect the A/C compressor wire clamp.
(b) Install a No.2 engine hanger in the correct direction.
Part No.:

No.2 Engine hanger	12282 – 62030
Bolt	91512 – 61020

Torque: 40 N·m (400 kgf·cm, 30 ft·lbf)

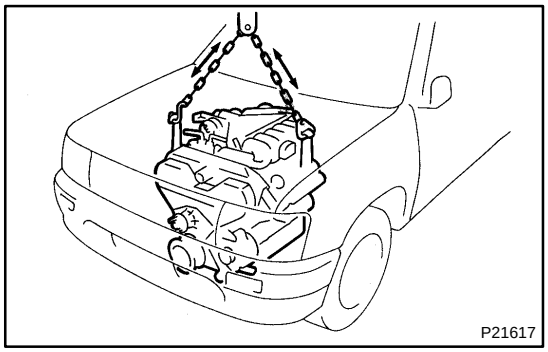

(c) Attach the engine hoist chain to the 2 engine hangers.

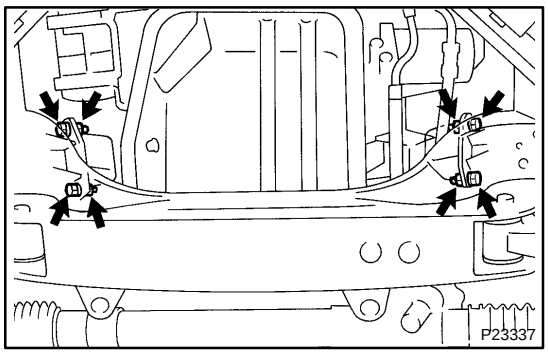

(d) Remove the 4 bolts and 4 nuts holding the engine front mounting insulators to the frame.

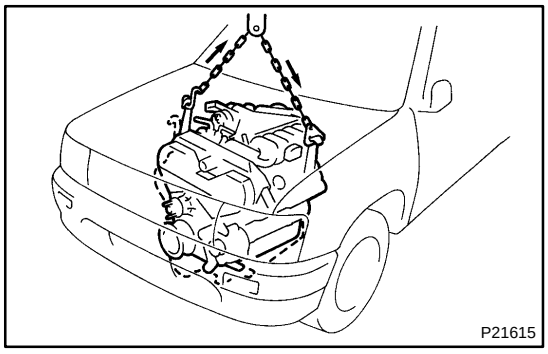

(e) Lift the engine out of the vehicle slowly and carefully.

NOTICE:

Make sure the engine is clear of all wiring and hoses.

(f) Place the engine assembly onto the stand.

EXHAUST SYSTEM

EM1N4–01

COMPONENTS

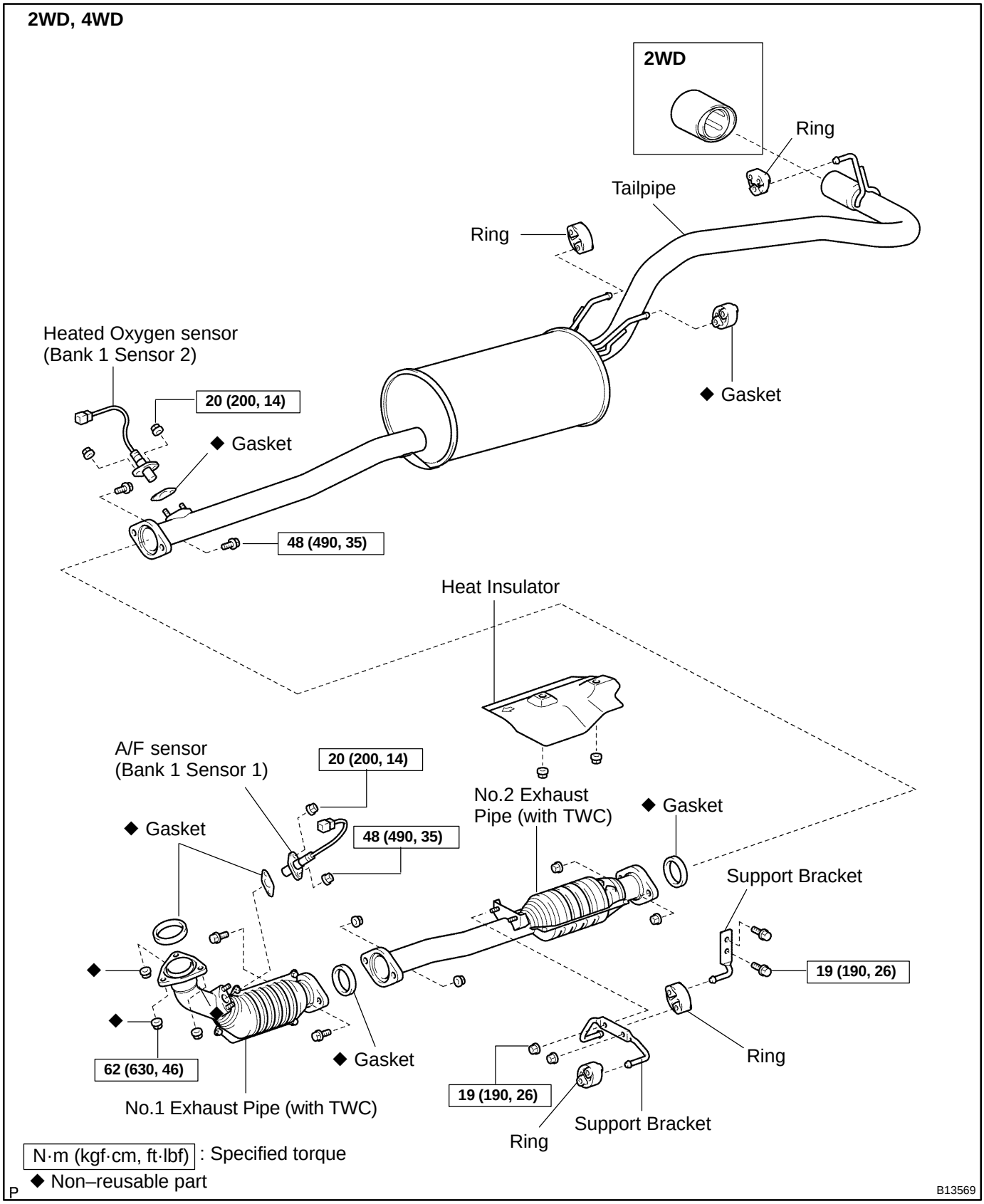

IDLE SPEED

EM1U3–01

INSPECTION

1. INITIAL CONDITIONS

(a) Engine at normal operating temperature.
(b) Air cleaner installed.
(c) All pipes and hoses of air induction system connected.
(d) All accessories switched OFF.
(e) All vacuum lines properly connected.
(f) SFI system wiring connectors fully plugged.
(g) Ignition timing checked correctly.
(h) Transmission in neutral position.
(i) A/C switch is OFF.

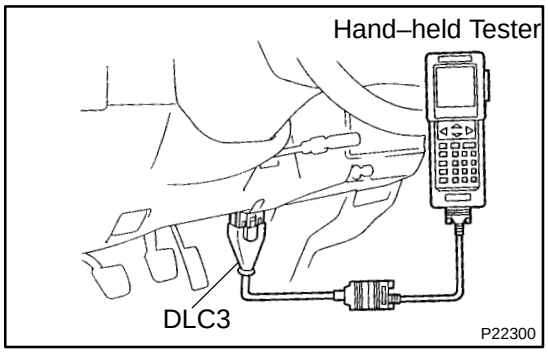

2. CONNECT HAND–HELD TESTER OR OBD II SCAN TOOL

(a) Connect the hand–held tester or OBD II scan tool to the DLC3.
(b) Please refer to the hand–held tester or OBD II scan tool operator's manual for further details.

3. INSPECT IDLE SPEED

(a) Race the engine speed at 1,000 rpm for approx. 5 seconds.
(b) Check the idle speed.

Idle speed: 700 ± 50 rpm

If the idle speed is not as specified, check the IAC valve and air intake system.

4. DISCONNECT HAND–HELD TESTER OR OBD II SCAN TOOL

IGNITION TIMING

EM1U2–01

INSPECTION

1. WARM UP ENGINE

Allow the engine to warm up to normal operating temperature.

2. CHECK IDLE SPEED (See page EM–10)

3. CONNECT TIMING LIGHT TO ENGINE

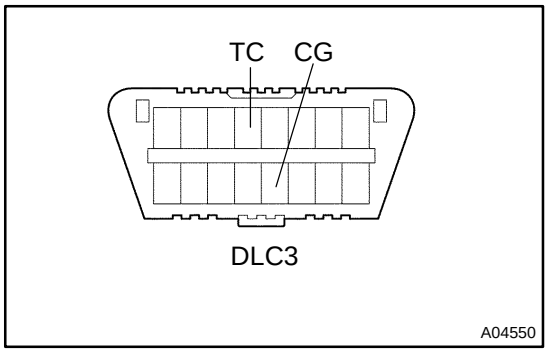

4. INSPECT IGNITION TIMING

(a) Using SST, connect terminals TC and CG of the DLC3.
SST 09843–18040

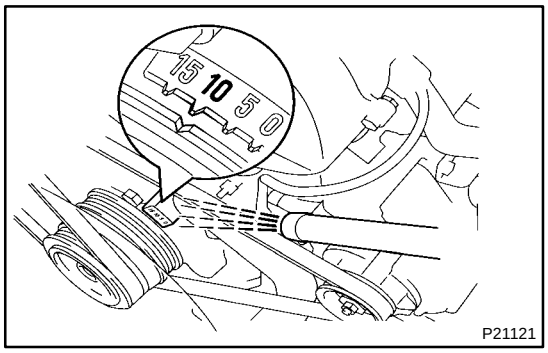

(b) Using a timing light, check the ignition timing.
Ignition timing:
10 ± 2° BTDC @ idle
(Transmission in neutral position)

(c) Remove the SST from the DLC3.

5. FURTHER CHECK IGNITION TIMING
Ignition timing: 3 – 19° BTDC @ idle
(Transmission in neutral position)

HINT:
The timing mark moves in a range between 3° and 19°.

6. DISCONNECT TIMING LIGHT FROM ENGINE

TIMING BELT

COMPONENTS

EM01H–13

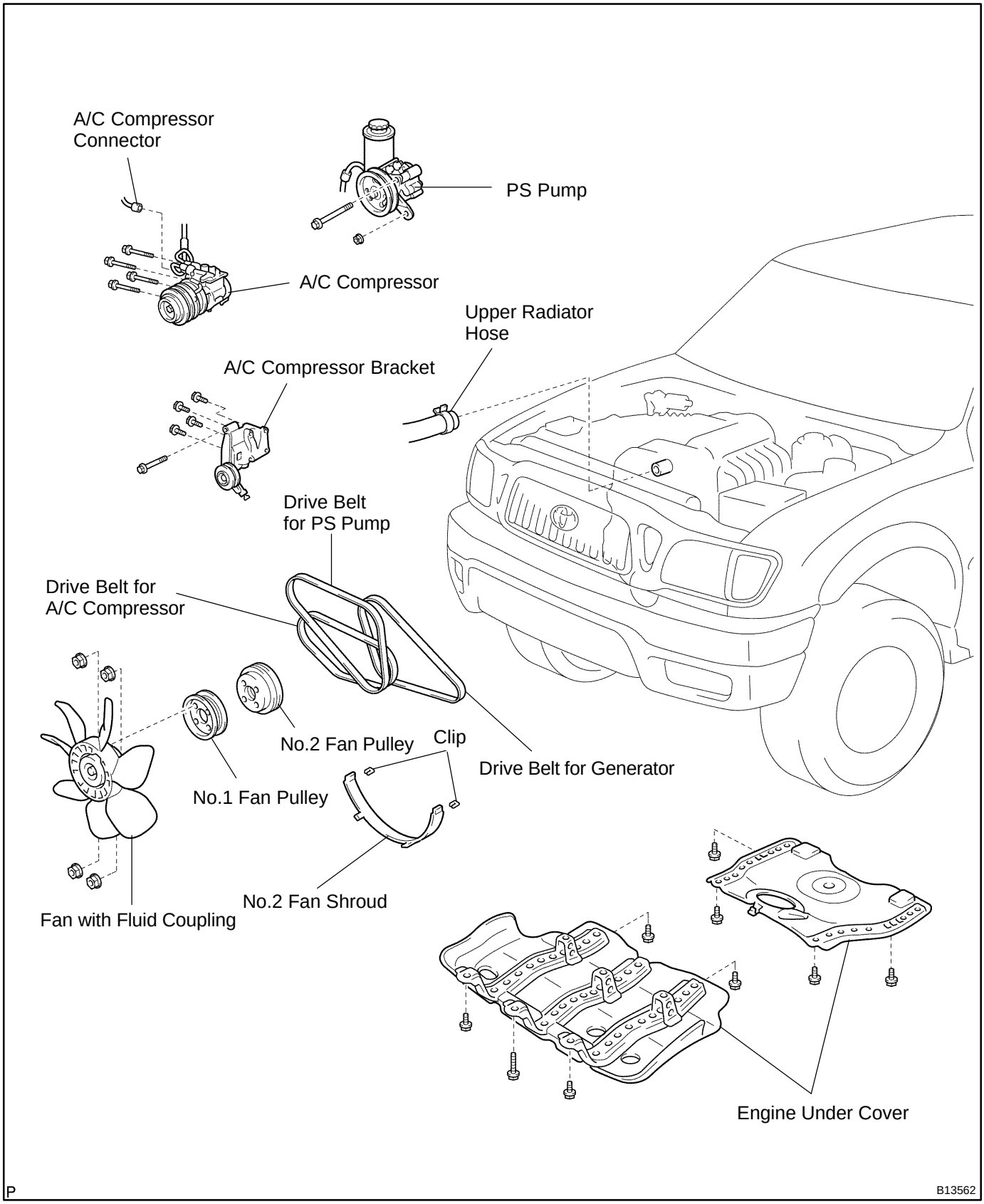

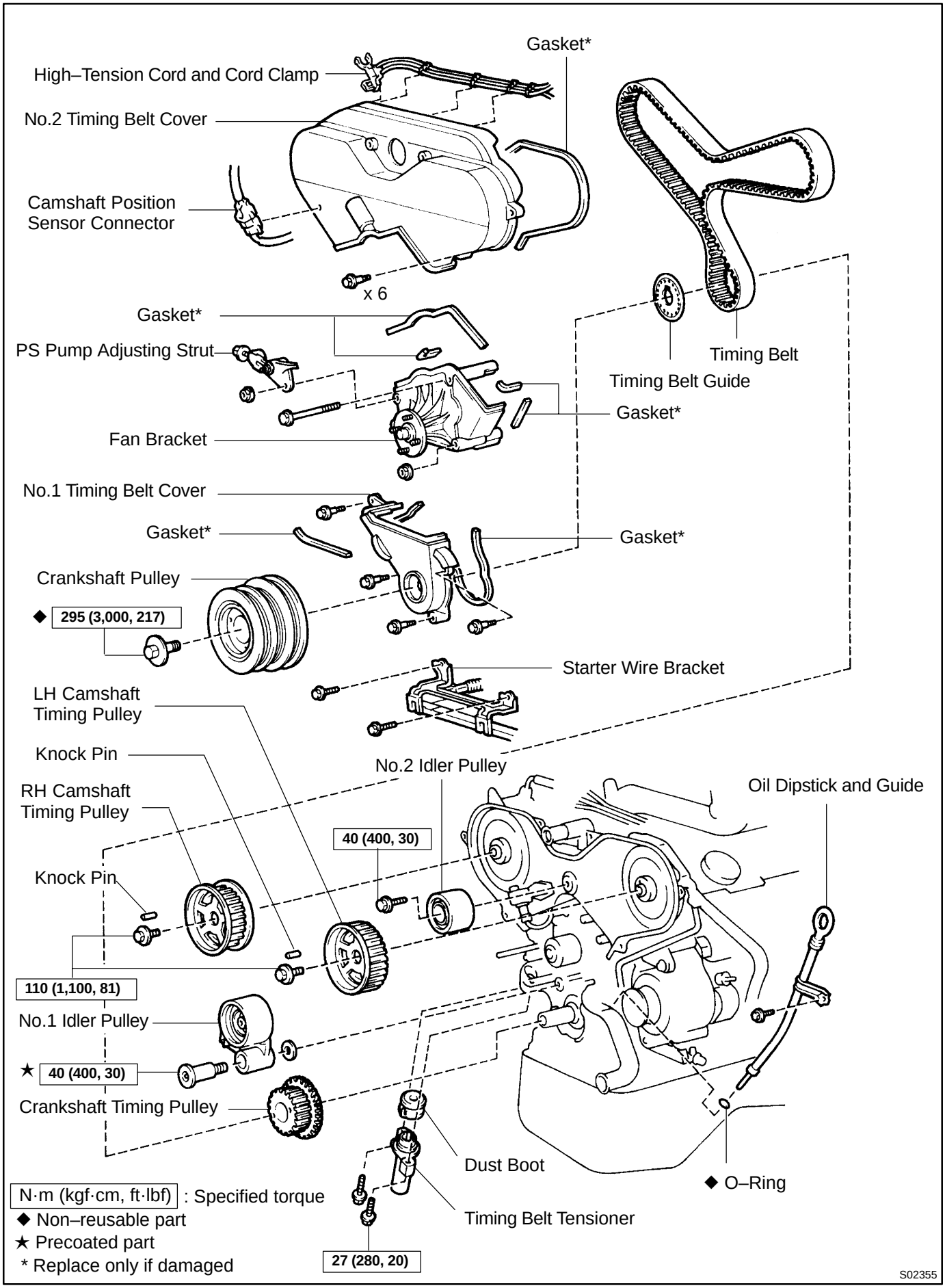
Gasket*
High–Tension Cord and Cord Clamp
No.2 Timing Belt Cover
Camshaft Position Sensor Connector
x 6
Gasket*
PS Pump Adjusting Strut
Timing Belt
Timing Belt Guide
Gasket*
Fan Bracket
No.1 Timing Belt Cover
Gasket*
Gasket*
Crankshaft Pulley
◆ 295 (3,000, 217)
Starter Wire Bracket
LH Camshaft Timing Pulley
Knock Pin
No.2 Idler Pulley
Oil Dipstick and Guide
RH Camshaft Timing Pulley
40 (400, 30)
Knock Pin
110 (1,100, 81)
No.1 Idler Pulley
★ 40 (400, 30)
Crankshaft Timing Pulley
Dust Boot
◆ O–Ring
Timing Belt Tensioner
27 (280, 20)
N·m (kgf·cm, ft·lbf) : Specified torque
◆ Non–reusable part
★ Precoated part
* Replace only if damaged
S02355

EM01J–09

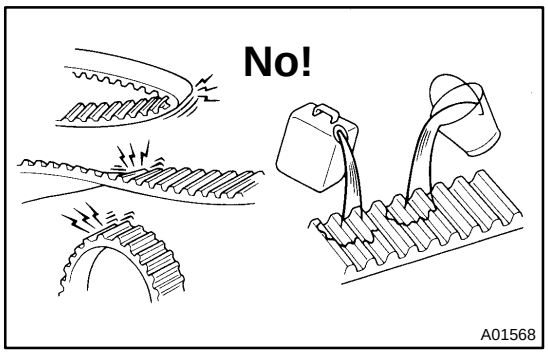

INSPECTION

1. INSPECT TIMING BELT

NOTICE:

- **Do not bend, twist or turn the timing belt inside out.**
- **Do not allow the timing belt to come into contact with oil, water or steam.**
- **Do not utilize timing belt tension when installing or removing the mount bolt of the camshaft timing pulley.**

If there are any defects, as shown in the illustrations, check these points:

(1) Premature parting
Check for proper installation.
Check the timing cover gasket for damage and proper installation.

(2) If the belt teeth are cracked or damaged, check to see if either camshaft is locked.

(3) If there is noticeable wear or cracks on the belt face, check to see if there are nicks on the side of the idler pulley lock and water pump.

(4) If there is wear or damage on only one side of the belt, check the belt guide and the alignment of each pulley.

(5) If there is noticeable wear on the belt teeth, check the timing cover for damage, correct gasket installation, and for foreign material on the pulley teeth.

If necessary, replace the timing belt.

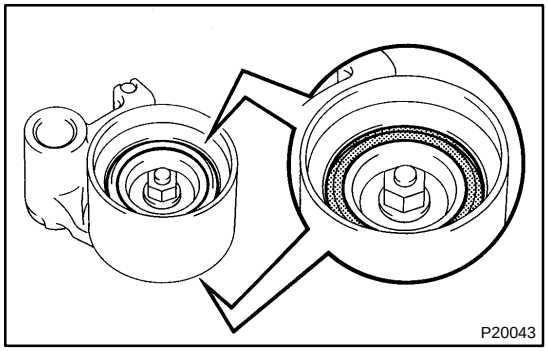

2. INSPECT IDLER PULLEYS

(a) Visually check the seal portion of the idler pulley for oil leakage.

If leakage is found, replace the idler pulley.

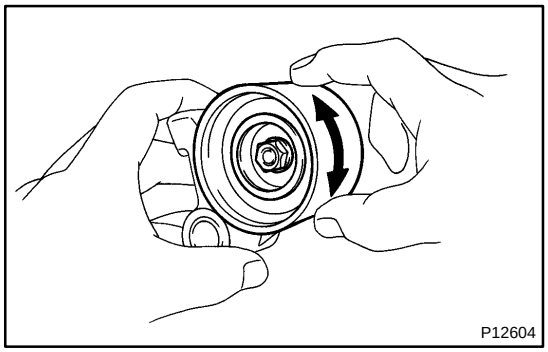

(b) Check that the idler pulley turns smoothly.

If necessary, replace the idler pulley.

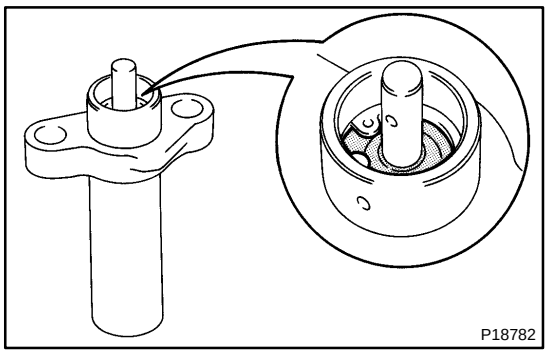

3. INSPECT TIMING BELT TENSIONER

(a) Visually check the seal portion of the tensioner for oil leakage.

HINT:

If there is only the faintest trace of oil on the seal on the push rod side, the tensioner is all right.

If leakage is found, replace the tensioner.

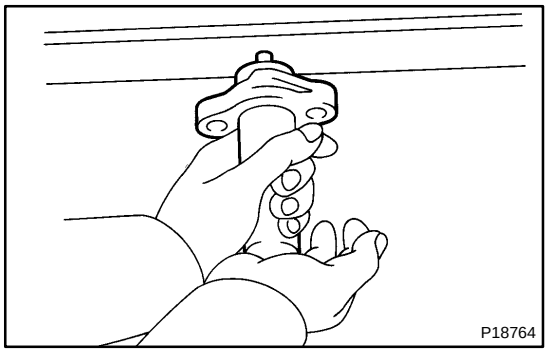

(b) Hold the tensioner with both hands and push the push rod strongly as shown to check that it doesn't move.

If the push rod moves, replace the tensioner.

NOTICE:

Never hold the tensioner push rod facing downward.

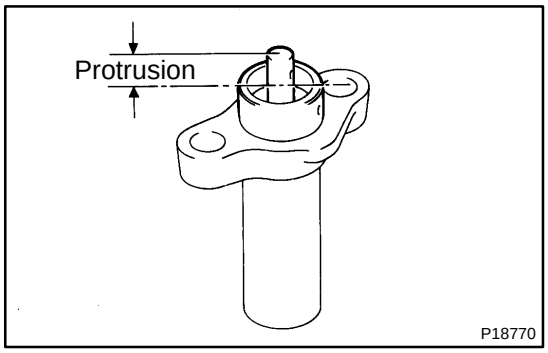

(c) Measure the protrusion of the push rod from the housing end.

Protrusion: 10.0 – 10.8 mm (0.394 – 0.425 in.)

If the protrusion is not as specified, replace the tensioner.

EM0ZT–03

INSTALLATION

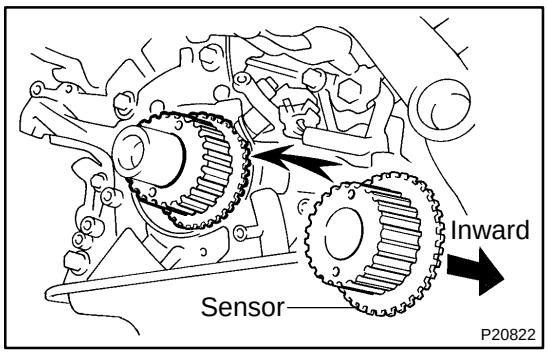

1. INSTALL CRANKSHAFT TIMING PULLEY

(a) Align the pulley set key with the key groove of the timing pulley and slide on the timing pulley.

(b) Slide on the timing pulley, facing the flange side inward.

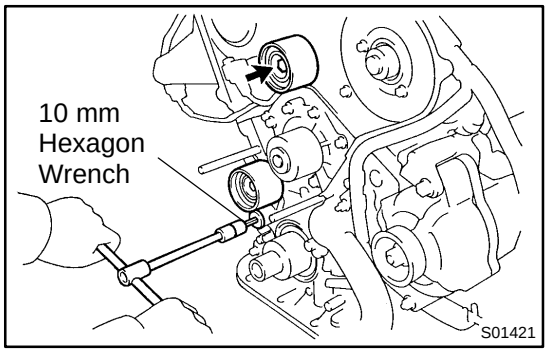

2. INSTALL NO.1 IDLER PULLEY

(a) Using a 10 mm hexagon wrench, install the plate washer and idler pulley with bolt.
Torque: 35 N·m (350 kgf·cm, 26 ft·lbf)

(b) Check that the pulley bracket moves smoothly.

3. INSTALL NO.2 IDLER PULLEY

(a) Install the idler pulley with the bolt.
Torque: 40 N·m (400 kgf·cm, 30 ft·lbf)

(b) Check that the idler pulley moves smoothly.

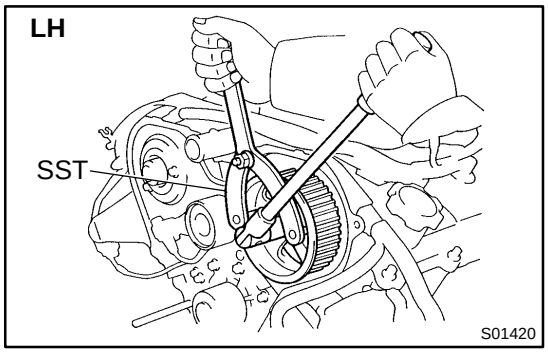

4. INSTALL LH CAMSHAFT TIMING PULLEY

(a) Face the flange side of the timing pulley outward.

(b) Align the knock pin on the camshaft with the knock pin groove of the timing pulley, and slide on the timing pulley.

(c) Using SST, install the pulley bolt.
SST 09960–10010 (09962–01000, 09963–01000)
Torque: 110 N·m (1,100 kgf·cm, 81 ft·lbf)

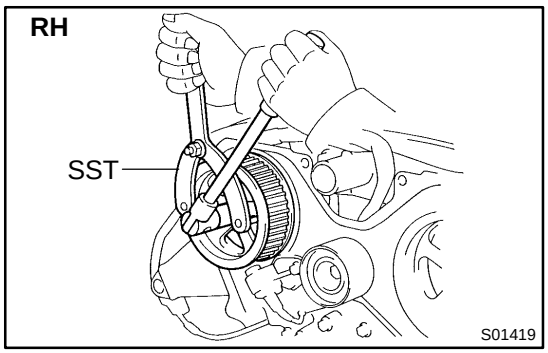

5. INSTALL RH CAMSHAFT TIMING PULLEY

(a) Face the flange side of the timing pulley outward.

(b) Align the knock pin on the camshaft with the knock pin groove of the timing pulley, and slide on the timing pulley.

(c) Using SST, install the pulley bolt.
SST 09960–10010 (09962–01000, 09963–01000)
Torque: 110 N·m (1,100 kgf·cm, 81 ft·lbf)

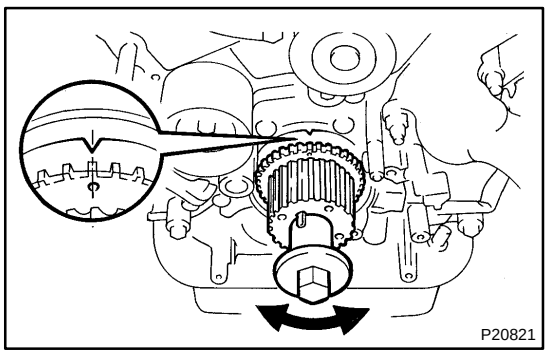

6. SET NO.1 CYLINDER TO TDC/COMPRESSION

(a) Temporarily install the crankshaft pulley bolt to the crankshaft.

(b) Turn the crankshaft, and align the timing marks of the crankshaft timing pulley and oil pump body.

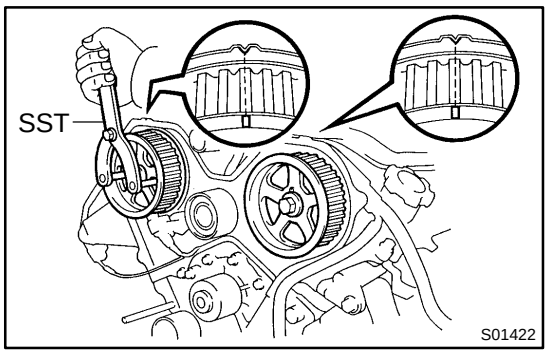

(c) Using SST, turn the camshaft pulley, align the timing marks of the timing pulley and No.3 timing belt cover.
SST 09960–10010 (09962–01000, 09963–01000)

7. INSTALL TIMING BELT

NOTICE:

The engine should be cold.

(a) Remove any oil or water on the pulleys, and keep them clean.

NOTICE:

Only wipe the pulleys; do not use any cleansing agent.

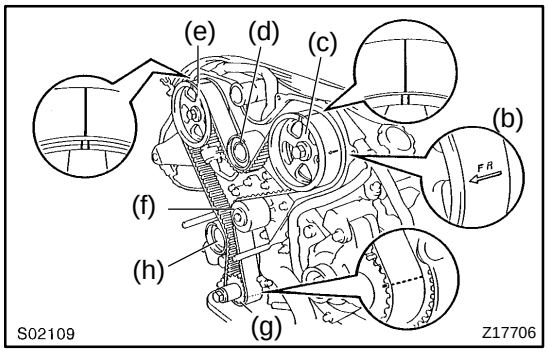

(b) Face the front mark on the timing belt forward.
(c) Install the timing belt to the LH camshaft timing pulley. Align the installation mark on the timing belt with the timing mark of the camshaft timing pulley.
(d) Install the timing belt to the No.2 idler pulley.
(e) Install the timing belt to the RH camshaft timing pulley. Align the installation mark on the timing belt with the timing mark of the camshaft timing pulley.
(f) Install the timing belt to the water pump pulley.
(g) Install the timing belt to the crankshaft timing pulley. Align the installation mark on the timing belt with the timing mark of the crankshaft timing pulley.
(h) Install the timing belt to the No.1 idler pulley.

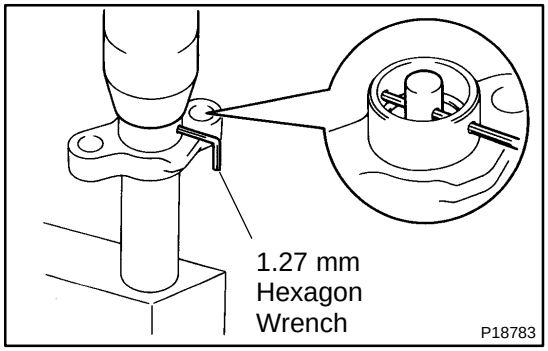

8. SET TIMING BELT TENSIONER

(a) Using a press, slowly press in the push rod using 981 – 9,807 N (100 – 1,000 kgf, 200 – 2,205 lbf) of pressure.
(b) Align the holes of the push rod and housing, pass a 1.27 mm hexagon wrench through the holes to keep the setting position of the push rod.
(c) Release the press.

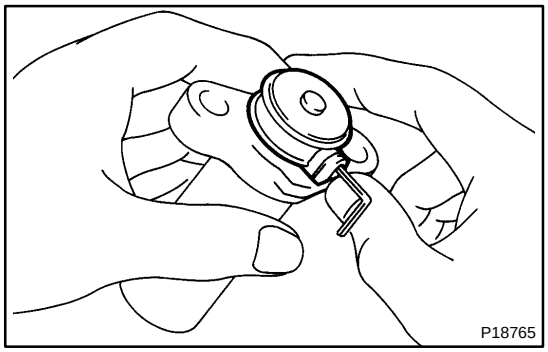

(d) Install the dust boot to the tensioner.

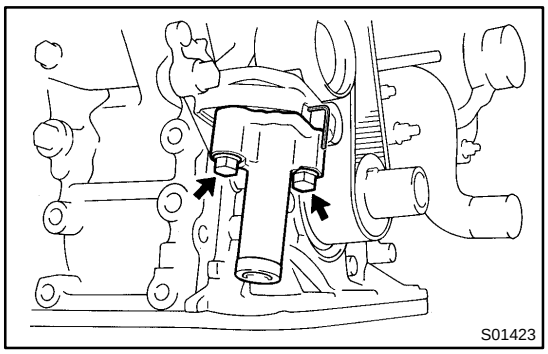

9. INSTALL TIMING BELT TENSIONER

(a) Temporarily install the tensioner with the 2 bolts.

(b) Alternately tighten the 2 bolts.

Torque: 27 N·m (280 kgf·cm, 20 ft·lbf)

(c) Remove the 1.27 mm hexagon wrench from the tensioner.

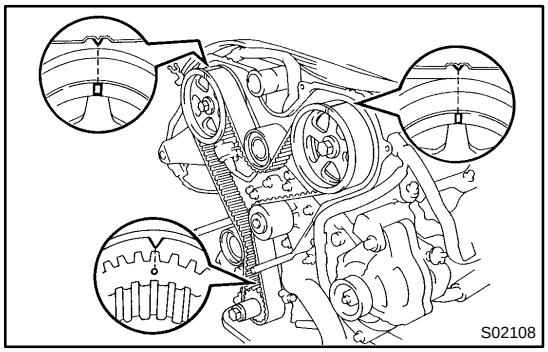

10. CHECK VALVE TIMING

(a) Turn the crankshaft, and align the timing marks of the crankshaft timing pulley and oil pump body.

NOTICE:

Always turn the crankshaft clockwise.

(b) Check that the timing marks of the RH and LH timing pulleys with the timing marks of the No.3 timing belt cover as shown in the illustration.

If the marks do not align, remove the timing belt and reinstall it.

(c) Remove the crankshaft pulley bolt.

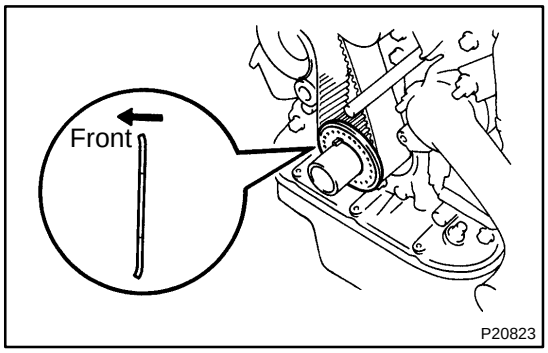

11. INSTALL TIMING BELT GUIDE

Install the guide, facing the cup side outward.

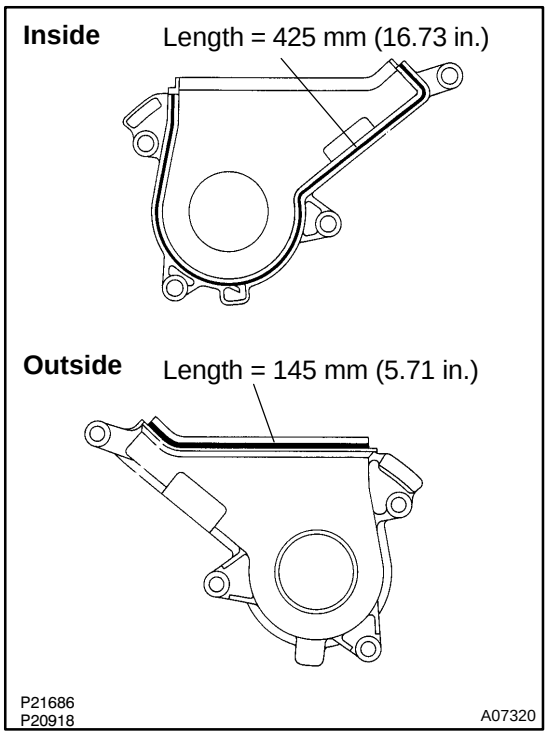

12. INSTALL NO.1 TIMING BELT COVER AND STARTER WIRE BRACKET

(a) Check that the timing belt cover gaskets have cracks or peeling, etc.

If the gasket does have cracks or peeling, etc., replace it using these steps.

(1) Using a screwdriver and gasket scraper, remove all the old gasket material.

(2) Thoroughly clean all components to remove all the loose material.

(3) Remove the backing paper from a new gasket and install the gasket evenly to the part of the belt cover shaded back in the illustration.

(b) Install the timing belt cover with the 4 bolts.

Torque: 9 N·m (90 kgf·cm, 80 in.·lbf)

(c) Install the starter wire bracket with the 2 bolts.

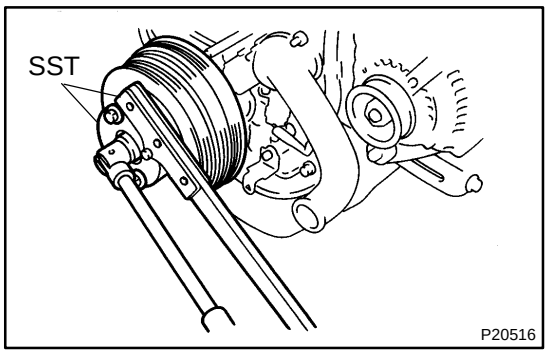

13. INSTALL CRANKSHAFT PULLEY

(a) Align the pulley set key with the key groove of the pulley, and slide the pulley.

(b) Using SST, install a new bolt.
SST 09213–54015 (90119–08216), 09330–00021
Torque: 295 N·m (3,000 kgf·cm, 217 ft·lbf)

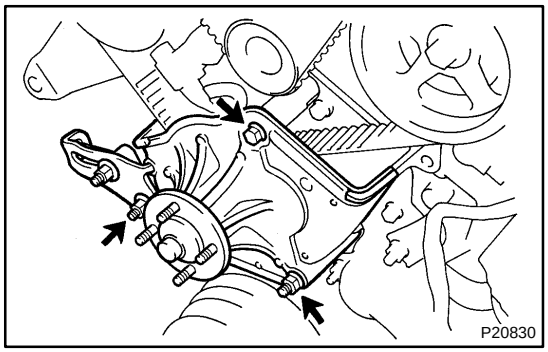

14. INSTALL FAN BRACKET

(a) Install the fan bracket with the bolt and nut.

(b) Install the PS pump adjusting strut with the nut.

15. INSTALL NO.2 TIMING BELT COVER

(a) Check that the timing belt cover gasket has no cracks or peeling, etc.

If the gasket does have cracks or peeling, etc., replace it using these steps.

(1) Using a screwdriver and gasket scraper, remove all the old gasket material.

(2) Thoroughly clean all components to remove all the loose material.

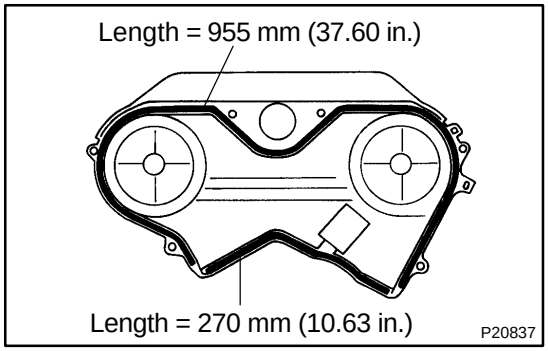

(3) Remove the backing paper from a new gasket and install the gasket evenly to the part of the belt cover shaded black in the illustration.

(b) Install the timing belt cover with the 6 bolts.
Torque: 9 N·m (90 kgf·cm, 80 in.·lbf)

(c) Connect the 4 high–tension cord clamps and camshaft position sensor connector to the timing belt cover.

16. INSTALL OIL DIPSTICK AND GUIDE

(a) Install a new O–ring to the dipstick guide.

(b) Apply soapy water to the O–ring.

(c) Install the oil dipstick and guide to the cylinder block.

(d) Install the bolt to the generator bracket.
Torque: 8 N·m (80 kgf·cm, 71 in.·lbf)

17. INSTALL A/C COMPRESSOR BRACKET
Torque: 47 N·m (479 kgf·cm, 35 ft·lbf)

18. TEMPORARILY INSTALL FAN WITH FLUID COUPLING AND FAN PULLEYS

19. INSTALL NO.2 FAN SHROUD

20. INSTALL AND ADJUST DRIVE BELT FOR GENERATOR (See page CH–15)

21. TIGHTEN FAN WITH FLUID COUPLING AND FAN PULLEYS

Torque: 5.4 N·m (54 kgf·cm, 48 in.·lbf)

22. CONNECT A/C COMPRESSOR TO ENGINE

(a) Install the A/C compressor with the 4 bolts.

Torque: 25 N·m (250 kgf·cm, 18 ft·lbf)

(b) Install the drive belt (See page AC–18).

(c) Connect the A/C compressor connector.

23. CONNECT PS PUMP TO ENGINE

(a) Temporarily install the PS pump with the bolt and nut.

(b) Install the drive belt (See page SR–3).

(c) Tighten the bolt and nut.

Torque: 43 N·m (440 kgf·cm, 31 ft·lbf)

(d) Install the PS pressure tube clamp with the bolt.

(e) Connect the 2 PS air hoses to the air intake chamber and resonator.

24. CONNECT UPPER RADIATOR HOSE

25. FILL ENGINE WITH COOLANT

26. START ENGINE CHECK FOR LEAKS

27. INSTALL ENGINE UNDER COVER

28. PERFORM ROAD TEST

Check for abnormal noise, shock, slippage, correct shift points and smooth operation.

29. RECHECK ENGINE COOLANT LEVEL

EM01I–15

REMOVAL

1. REMOVE ENGINE UNDER COVER
2. DRAIN ENGINE COOLANT
3. DISCONNECT UPPER RADIATOR HOSE

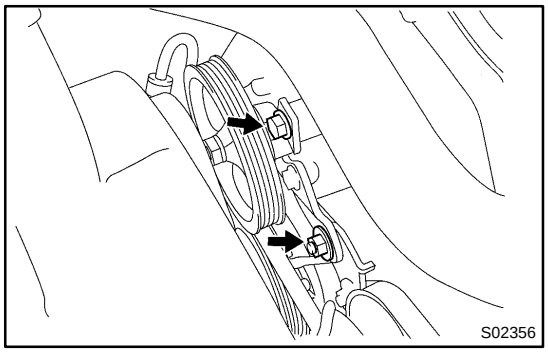

4. DISCONNECT PS PUMP FROM ENGINE

(a) Disconnect the 2 PS air hoses from the air intake chamber and resonator.
(b) Remove the bolt holding the PS pressure tube clamp to the frame.
(c) Remove the drive belt (See page SR–3).
(d) Remove the bolt and nut, and disconnect the PS pump from the engine.

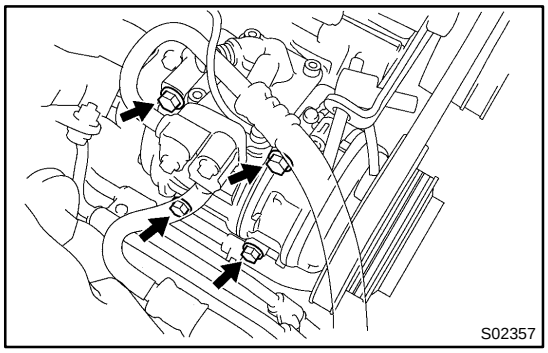

5. DISCONNECT A/C COMPRESSOR FROM ENGINE

(a) Disconnect the A/C compressor connector.
(b) Remove the drive belt (See page AC–17).
(c) Remove the 4 bolts, and disconnect the A/C compressor from the engine.

6. LOOSEN FAN WITH FLUID COUPLING AND FAN PULLEYS
7. REMOVE DRIVE BELT FOR GENERATOR (See page CH–5)
8. REMOVE NO.2 FAN SHROUD
9. REMOVE FAN WITH FLUID COUPLING AND FAN PULLEYS

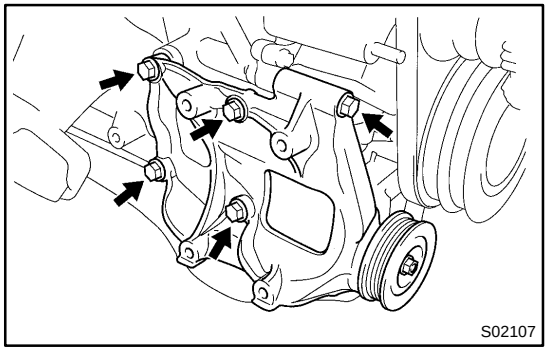

10. REMOVE A/C COMPRESSOR BRACKET

Remove the 5 bolts and A/C compressor bracket.

11. REMOVE OIL DIPSTICK AND GUIDE

Remove the bolt, oil dipstick, guide and O–ring.

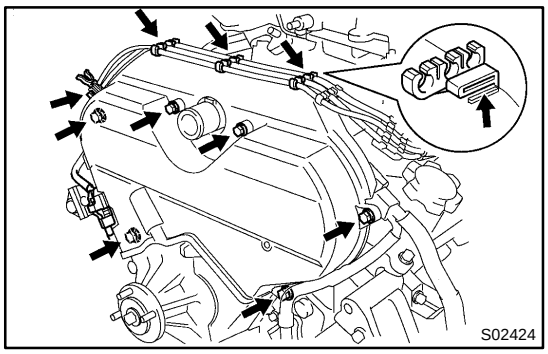

12. REMOVE NO.2 TIMING BELT COVER

(a) Disconnect the 4 high–tension cord clamps from the timing belt cover.
(b) Remove the 6 bolts and timing belt cover.
(c) Disconnect the camshaft position sensor connector.

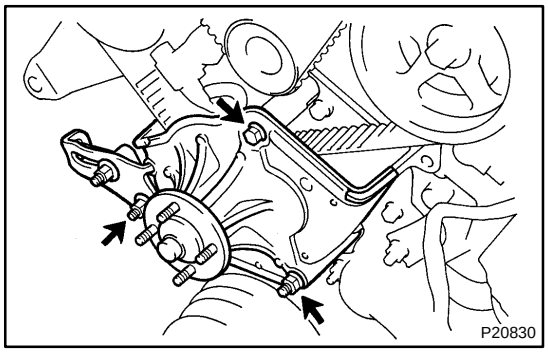

13. REMOVE FAN BRACKET

(a) Remove the nut and PS pump adjusting strut.
(b) Remove the bolt, nut and fan bracket.

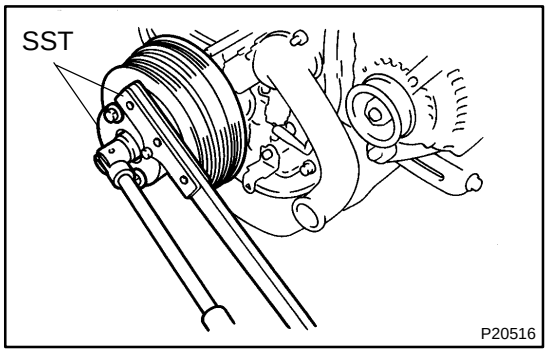

14. REMOVE CRANKSHAFT PULLEY

(a) Using SST, loosen the pulley bolt.
SST 09213–54015 (90119–08216), 09330–00021
(b) Remove the SST, pulley bolt and pulley.

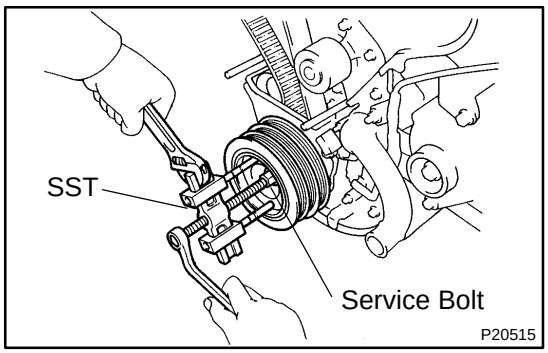

HINT:
If necessary, remove the pulley with SST and a service bolt.
SST 09950–50011 (09951–05010, 09952–05010, 09953–05020, 09954–05031)

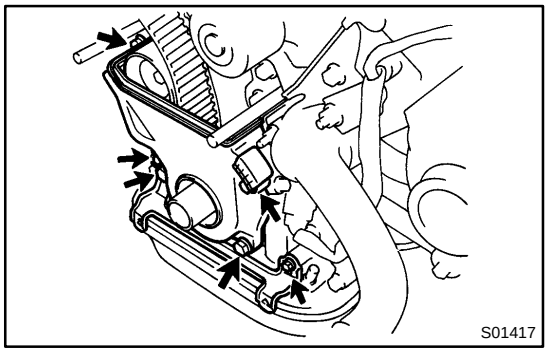

15. REMOVE STARTER WIRE BRACKET AND NO.1 TIMING BELT COVER

(a) Remove the 2 bolts and starter wire bracket.
(b) Remove the 4 bolts and timing belt cover.

16. REMOVE TIMING BELT GUIDE

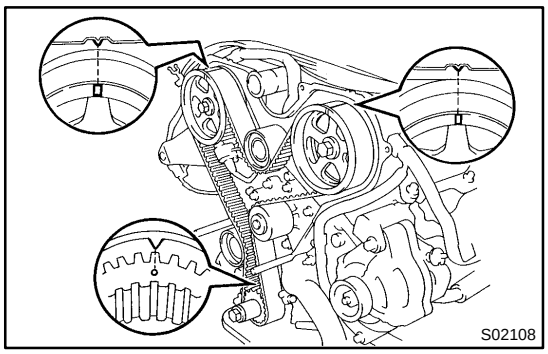

17. SET NO.1 CYLINDER AT TDC/COMPRESSION

(a) Temporarily install the crankshaft pulley bolt to the crankshaft.

(b) Turn the crankshaft, and align the timing marks of the crankshaft timing pulley and oil pump body.

NOTICE:

Always turn the crankshaft clockwise.

(c) Check that the timing marks of the camshaft timing pulleys and No.3 timing belt cover are aligned.

If not, turn the crankshaft pulley 1 revolution (360˚).

(d) Remove the crankshaft pulley bolt.

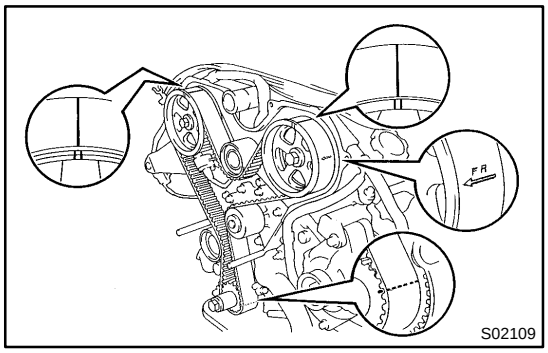

18. IF REUSING TIMING BELT, CHECK INSTALLATION MARKS ON TIMING BELT

Check that there are 3 installation marks and front mark on the timing belt.

If the installation and front marks have disappeared, before removing the timing belt, place 3 new installation marks on the timing belt to match the timing marks of the timing pulleys, and place a new front mark on the timing belt.

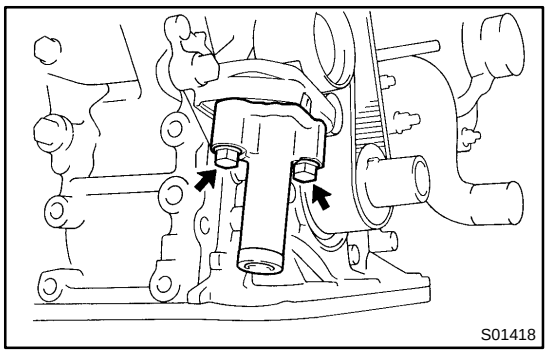

19. REMOVE TIMING BELT TENSIONER

Alternately loosen the 2 bolts, and remove them, the belt tensioner and dust boot.

20. REMOVE TIMING BELT

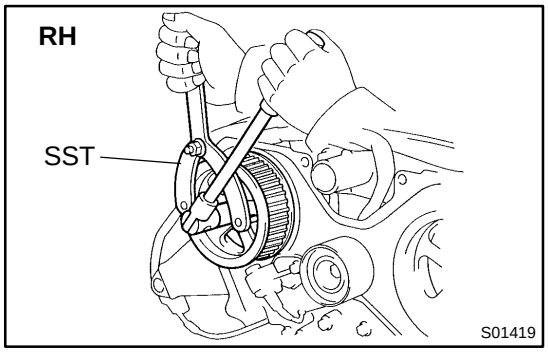

21. REMOVE RH CAMSHAFT TIMING PULLEY

(a) Using SST, loosen the pulley bolt.
SST 09960–10010 (09962–01000, 09963–01000)

(b) Remove the bolt, knock pin and timing pulley.

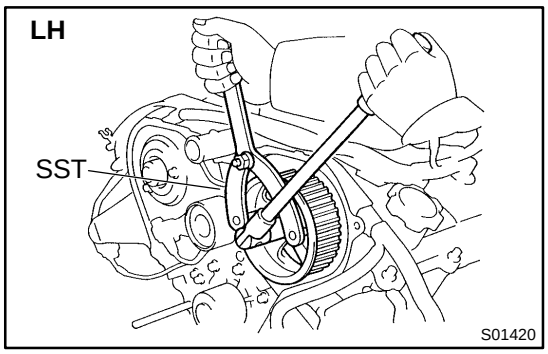

22. REMOVE LH CAMSHAFT TIMING PULLEY

(a) Using SST, loosen the pulley bolt.
SST 09960–10010 (09962–01000, 09963–01000)

(b) Remove the bolt, knock pin and timing pulley.

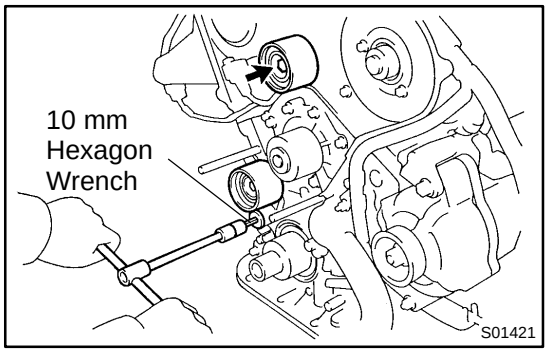

23. REMOVE NO.2 IDLER PULLEY

Remove the bolt and idler pulley.

24. REMOVE NO.1 IDLER PULLEY

Using a 10 mm hexagon wrench, remove the pivot bolt, idler pulley and plate washer.

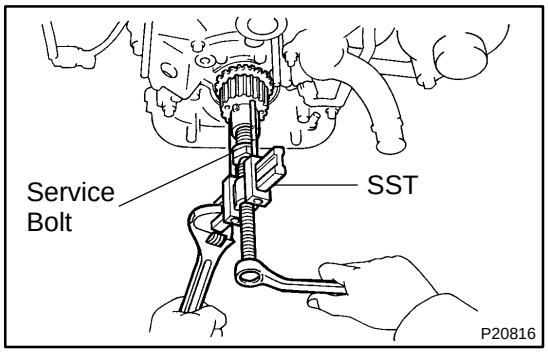

25. REMOVE CRANKSHAFT TIMING PULLEY

Remove the timing pulley.

HINT:

If the pulley cannot be removed by hand, use SST and a service bolt to remove the timing pulley.

SST 09950–50011 (09951–05010, 09952–05010, 09953–05020, 09954–05011)

VALVE CLEARANCE

INSPECTION

EM01E–10

HINT:

Inspect and adjust the valve clearance when the engine is cold.

1. **REMOVE INTAKE AIR CONNECTOR (See page EM–29)**
2. **REMOVE CYLINDER HEAD COVERS (See page EM–29)**

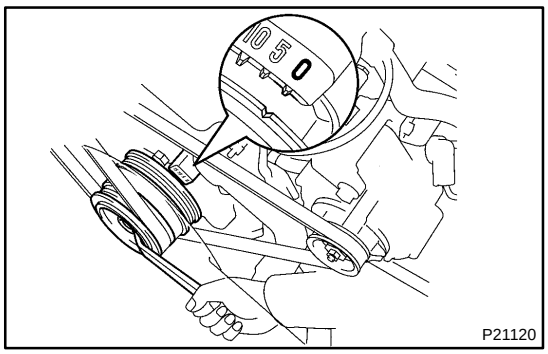

3. **SET NO.1 CYLINDER TO TDC/COMPRESSION**

(a) Turn the crankshaft pulley, and align its groove with timing mark ”0” of the No.1 timing belt cover.

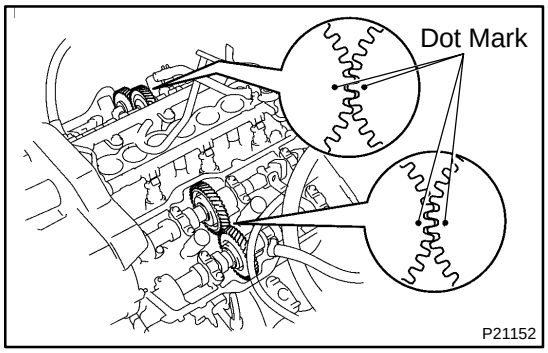

(b) Check that the timing marks (1 dot) of the camshaft drive and driven gears are in straight line on the cylinder heads surface as shown in the illustration.

If not, turn the crankshaft 1 revolution (360˚) and align the marks.

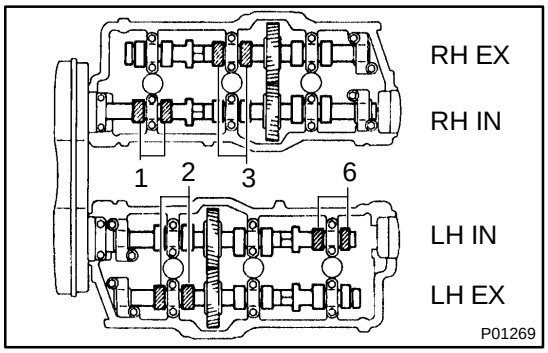

4. **INSPECT VALVE CLEARANCE**

(a) Check only the valves indicated in the illustration.

(1) Using a feeler gauge, measure the clearance between the valve lifter and camshaft.

(2) Record out of specification valve clearance measurements. They will be used later to determine the required replacement adjusting shim.

Valve clearance (Cold):

Intake	0.13 – 0.23 mm (0.006 – 0.009 in.)
Exhaust	0.27 – 0.37 mm (0.011 – 0.014 in.)

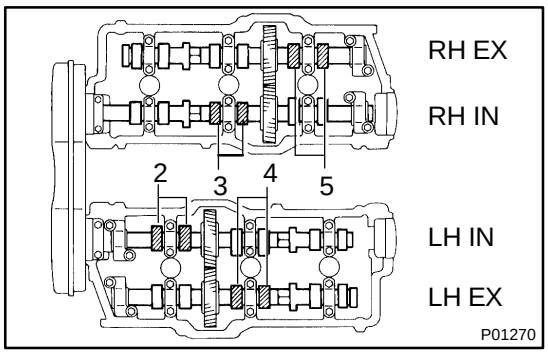

(b) Turn the crankshaft 2/3 of a revolution (240˚), and check only the valves indicated in the illustration. Measure the valve clearance (See step (a)).

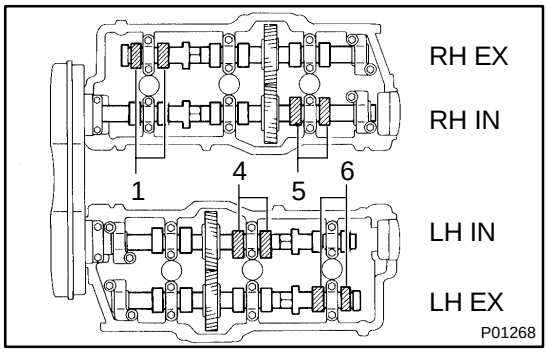

(c) Turn the crankshaft a further 2/3 of a revolution (240˚), and check only the valves indicated in the illustration. Measure the valve clearance (See step (a)).

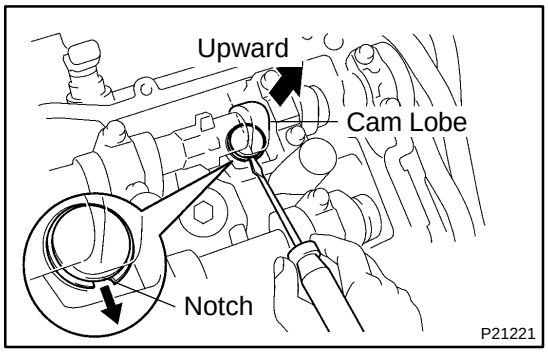

5. ADJUST VALVE CLEARANCE

(a) Remove the adjusting shim.

(1) Turn the camshaft so that the cam lobe for the valve to be adjusted faces up.

(2) Turn the valve lifter with a screwdriver so that the notches are perpendicular to the camshaft.

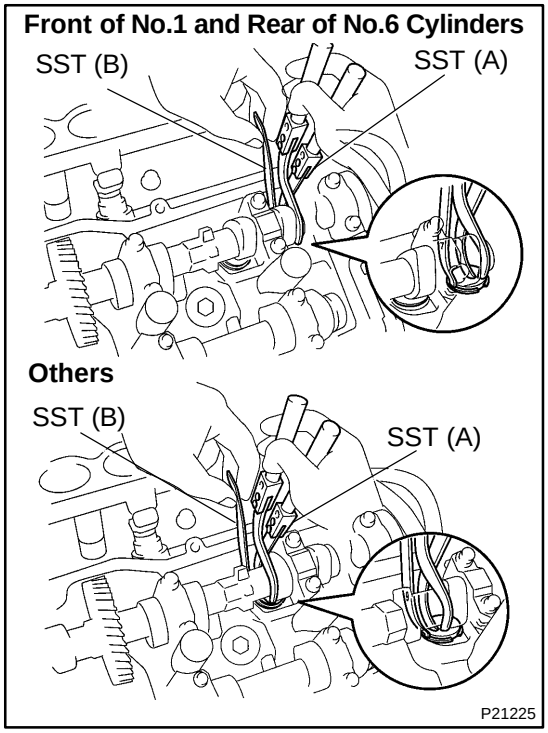

(3) Using SST (A), press down the valve lifter and place SST (B) between the camshaft and valve lifter. Remove SST (A).

SST 09248–55040 (09248–05410, 09248–05420)

HINT:

- Apply SST (B) at a slight angle on the side marked with ”9” or ”7”, at the position shown in the illustration.
- When SST (B) is inserted too deeply, it will get pinched by the shim. To prevent it from being stuck, insert it gently from the intake side, at a slight angle.

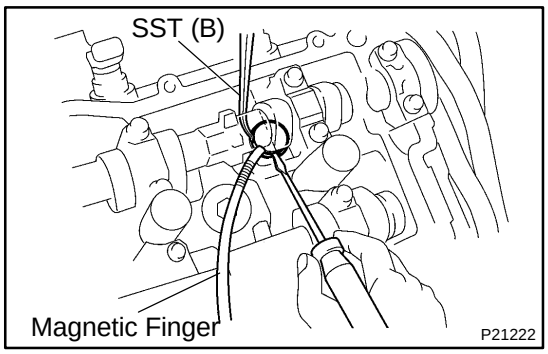

(4) Using a small screwdriver and magnetic finger, remove the adjusting shim.

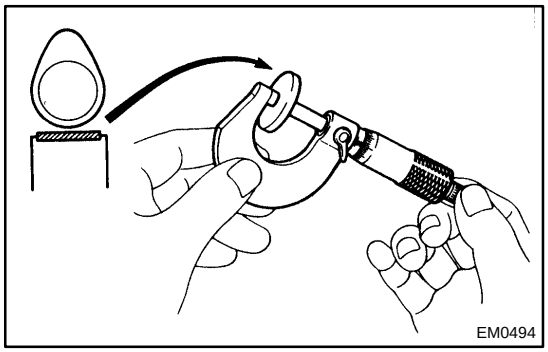

(b) Determine the replacement adjusting shim size by following the Formula or Charts:

(1) Using a micrometer, measure the thickness of the removed shim.

(2) Calculate the thickness of a new shim so the valve clearance comes within the specified value.

T ..... Thickness of used shim
A ..... Measured valve clearance
N ..... Thickness of new shim
Intake: N = T + (A – 0.18 mm (0.007 in.))
Exhaust: N = T + (A – 0.32 mm (0.013 in.))

(3) Select a new shim with a thickness as close as possible to the calculated values.

HINT:
Shims are available in 17 sizes in increments of 0.050 mm (0.0020 in.), from 2.500 mm (0.0984 in.) to 3.300 mm (0.1299 in.).

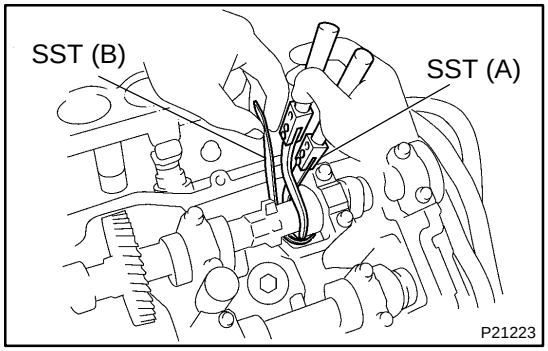

(c) Install a new adjusting shim.

(1) Place a new adjusting shim on the valve lifter, with imprinted numbers facing down.

(2) Using SST (A), press down the valve lifter and remove SST (B).

SST 09248–55040 (09248–05410, 09248–05420)

(d) Recheck the valve clearance.

6. REINSTALL CYLINDER HEAD COVERS (See page EM–50)

7. REINSTALL INTAKE AIR CONNECTOR (See page EM–50)

Adjusting Shim Selection Chart (Intake)

| Measured clearance mm (in.) \ Installed shim thickness mm (in.) | 2.500 (0.0984) | 2.520 (0.0992) | 2.540 (0.1000) | 2.550 (0.1004) | 2.560 (0.1008) | 2.580 (0.1016) | 2.600 (0.1024) | 2.620 (0.1031) | 2.640 (0.1039) | 2.650 (0.1043) | 2.660 (0.1047) | 2.670 (0.1051) | 2.680 (0.1055) | 2.690 (0.1059) | 2.700 (0.1063) | 2.710 (0.1067) | 2.720 (0.1071) | 2.730 (0.1075) | 2.740 (0.1079) | 2.750 (0.1083) | 2.760 (0.1087) | 2.770 (0.1091) | 2.780 (0.1094) | 2.790 (0.1098) | 2.800 (0.1102) | 2.810 (0.1106) | 2.820 (0.1110) | 2.830 (0.1114) | 2.840 (0.1118) | 2.850 (0.1122) | 2.860 (0.1126) | 2.870 (0.1130) | 2.880 (0.1134) | 2.890 (0.1138) | 2.900 (0.1142) | 2.910 (0.1146) | 2.920 (0.1150) | 2.930 (0.1154) | 2.940 (0.1157) | 2.950 (0.1161) | 2.960 (0.1165) | 2.970 (0.1169) | 2.980 (0.1173) | 2.990 (0.1177) | 3.000 (0.1181) | 3.010 (0.1185) | 3.020 (0.1189) | 3.030 (0.1193) | 3.040 (0.1197) | 3.050 (0.1201) | 3.060 (0.1205) | 3.080 (0.1213) | 3.100 (0.1220) | 3.120 (0.1228) | 3.140 (0.1236) | 3.150 (0.1240) | 3.160 (0.1244) | 3.180 (0.1252) | 3.200 (0.1260) | 3.220 (0.1268) | 3.240 (0.1276) | 3.250 (0.1280) | 3.260 (0.1283) | 3.280 (0.1291) | 3.300 (0.1299) |
|---|---|---

Adjusting Shim Selection Chart (Exhaust)

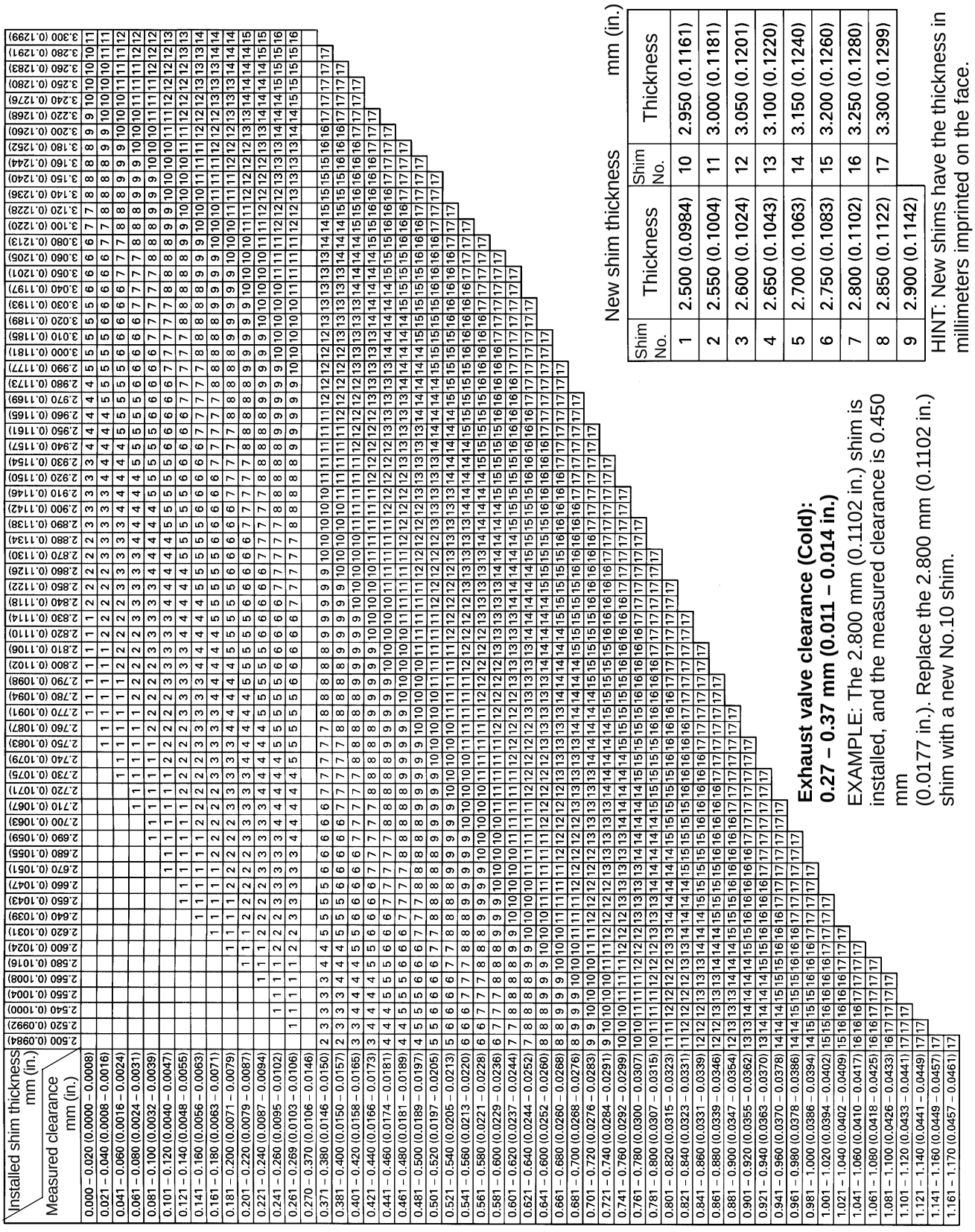

Exhaust valve clearance (Cold):
0.27 – 0.37 mm (0.011 – 0.014 in.)

EXAMPLE: The 2.800 mm (0.1102 in.) shim is installed, and the measured clearance is 0.450 mm (0.0177 in.). Replace the 2.800 mm (0.1102 in.) shim with a new No.10 shim.

New shim thickness mm (in.)

Shim No.	Thickness	Shim No.	Thickness
1	2.500 (0.0984)	10	2.950 (0.1161)
2	2.550 (0.1004)	11	3.000 (0.1181)
3	2.600 (0.1024)	12	3.050 (0.1201)
4	2.650 (0.1043)	13	3.100 (0.1220)
5	2.700 (0.1063)	14	3.150 (0.1240)
6	2.750 (0.1083)	15	3.200 (0.1260)
7	2.800 (0.1102)	16	3.250 (0.1280)
8	2.850 (0.1122)	17	3.300 (0.1299)
9	2.900 (0.1142)		

HINT: New shims have the thickness in millimeters imprinted on the face.

V06209

CAMSHAFT POSITION SENSOR

IG0KI–01

COMPONENTS

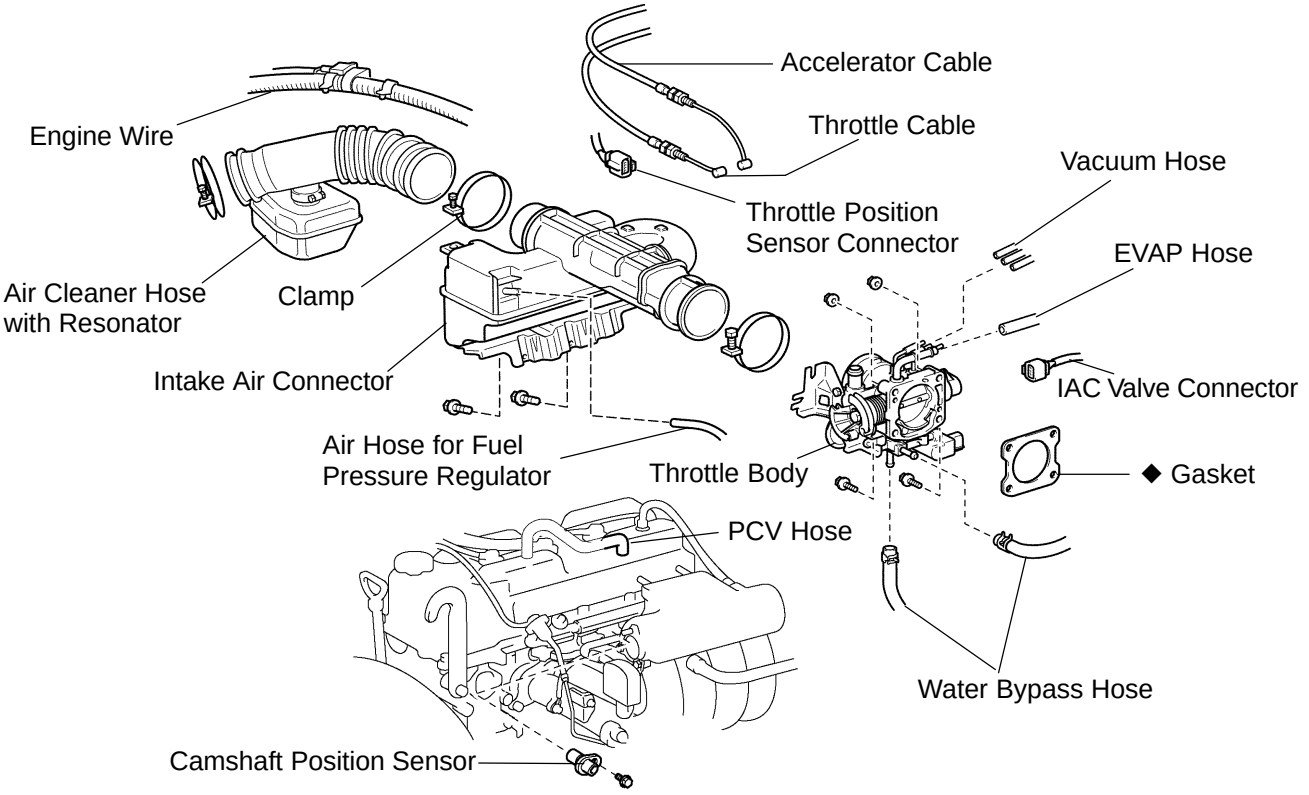

◆ Non–reusable part

B13696

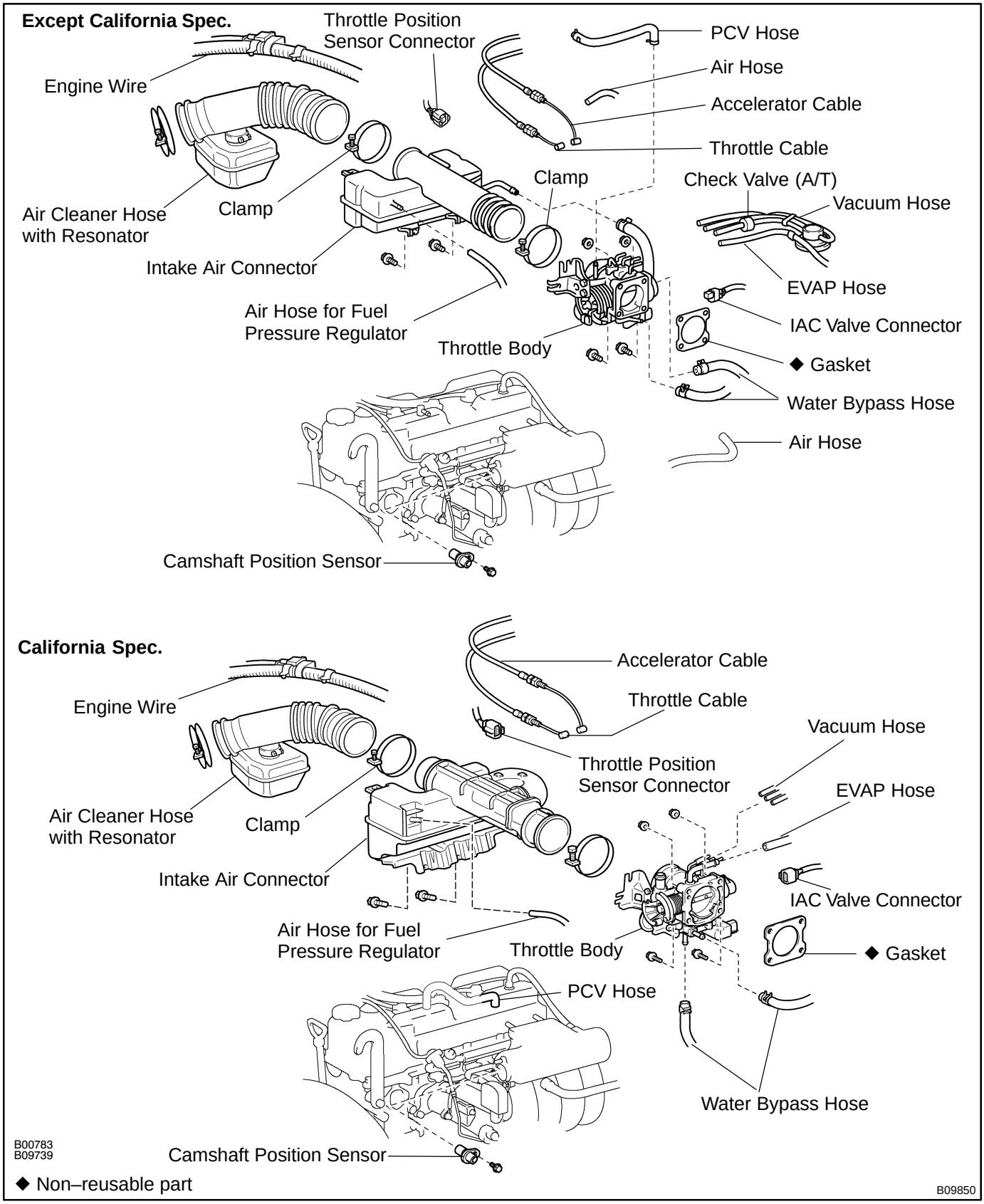
Except California Spec.
Throttle Position Sensor Connector
PCV Hose
Air Hose
Accelerator Cable
Throttle Cable
Engine Wire
Clamp
Check Valve (A/T)
Vacuum Hose
Air Cleaner Hose with Resonator
Clamp
Intake Air Connector
EVAP Hose
IAC Valve Connector
Air Hose for Fuel Pressure Regulator
Throttle Body
◆ Gasket
Water Bypass Hose
Air Hose
Camshaft Position Sensor
California Spec.
Accelerator Cable
Engine Wire
Throttle Cable
Vacuum Hose
Throttle Position Sensor Connector
EVAP Hose
Air Cleaner Hose with Resonator
Clamp
Intake Air Connector
IAC Valve Connector
Air Hose for Fuel Pressure Regulator
Throttle Body
◆ Gasket
PCV Hose
Water Bypass Hose
Camshaft Position Sensor
B00783
B09739
◆ Non–reusable part
B09850

IG0FG–01

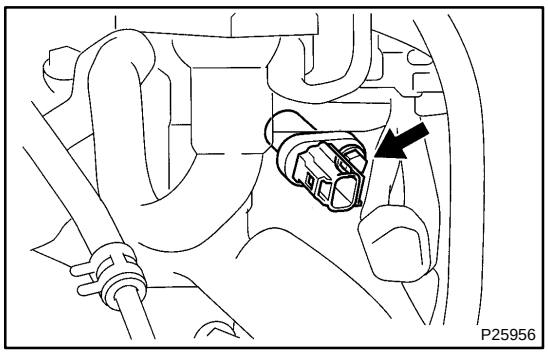

REPLACEMENT

1. REMOVE THROTTLE BODY (See page SF–30)

2. REMOVE CAMSHAFT POSITION SENSOR

(a) Disconnect the sensor connector.

(b) Remove the bolt and sensor.

3. REINSTALL NEW CAMSHAFT POSITION SENSOR

(a) Install a new sensor with the bolt.

Torque: 5.4 N·m (55 kgf·cm, 48 in.·lbf)

(b) Connect the sensor connector.

4. REINSTALL THROTTLE BODY (See page SF–32)

CRANKSHAFT POSITION SENSOR

IG0FH–01

REPLACEMENT

1. REMOVE ENGINE UNDER COVER

2. REMOVE GENERATOR (See page CH–5)

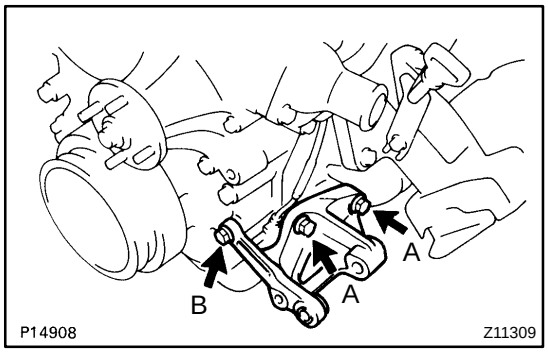

3. REMOVE GENERATOR BRACKET

Remove the 3 bolts and bracket.

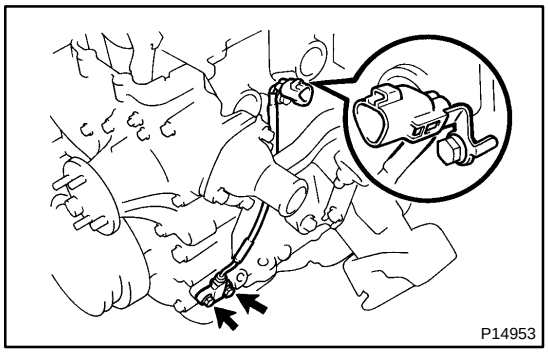

4. REMOVE CRANKSHAFT POSITION SENSOR

(a) Disconnect the sensor connector.

(b) Disconnect the sensor connector from the connector bracket.

(c) Remove the 2 bolts and crankshaft position sensor.

(d) Remove the O–ring.

5. REINSTALL NEW CRANKSHAFT POSITION SENSOR

(a) Install a new O–ring to the sensor.

(b) Install the sensor with the 2 bolts.

Torque: 8.5 N·m (85 kgf·cm, 74 in.·lbf)

(c) Reinstall the sensor connector to the connector bracket.

(d) Reconnect the sensor connector.

6. REINSTALL GENERATOR BRACKET

Install the bracket with the 3 bolts

Torque:

Bolt A: 74.5 N·m (760 kgf·cm, 55 ft·lbf)

Bolt B: 18 N·m (180 kgf·cm, 13 ft·lbf)

7. REINSTALL GENERATOR (See page CH–5)

8. REINSTALL ENGINE UNDER COVER

IGNITION SYSTEM

IG0KH–02

ON–VEHICLE INSPECTION

NOTICE:

"Cold" and "Hot" in these sentences express the temperature of the coils themselves. "Cold" is from –10˚C (14˚F) to 50˚C (122˚F) and "Hot" is from 50˚C (122˚F) to 100˚C (212˚F).

1. INSPECT IGNITION COIL WITH IGNIOR AND SPARK TEST

Check that the spark occurs.

(1) Remove the ignition coils.
(2) Remove the spark plugs.
(3) Install the spark plugs to each ignition coil, and connect the ignition coil connector.
(4) Ground the spark plug.
(5) Check if spark occurs while engine is being cranked.

NOTICE:

To prevent gasoline from being injected from injectors during this test, crank the engine for no more than 1 – 2 seconds at time.

If the spark done not occur, do the test as follows:

SPARK TEST

↓ NO

CHECK CONNECTION OF IGNITION COIL WITH IGNITOR CONNECTOR → BAD → Connect securely.

↓ OK

CHANGE IT TO NORMAL IGNITION COIL WITH IGNITOR AND PERFORM SPARK TEST AGAIN → OK → Replace ignition coil with ignitor.

↓ NO

CHECK POWER SUPPLY TO IGNITION COIL WITH IGNITOR
1. Turn ignition switch to ON.
2. Check that there is battery voltage at ignition coil positive (+) terminal.

→ BAD → Check wiring between ignition switch to ignition coil with ignitor.

↓ OK

CHECK RESISTANCE OF CAMSHAFT POSITION SENSOR (See step 6)

	Cold	Hot
Resistance:	**835 – 1,400 Ω**	**1,060 – 1,645 Ω**

→ BAD → Replace sensor.

↓ OK

CHECK RESISTANCE OF CRANKSHAFT POSITION SENSOR (See step 7)

	Cold	Hot
Resistance:	**1,630 – 2,740 Ω**	**2,065 – 3,225 Ω**

→ BAD → Replace sensor.

↓ OK

CHECK IGT SIGNAL FROM ECM (See page DI–95) → BAD → Check wiring between ECU and ignition coil with ignitor, and then try another ECM.

↓ OK

TRY ANOTHER IGNITION COIL WITH IGNITOR

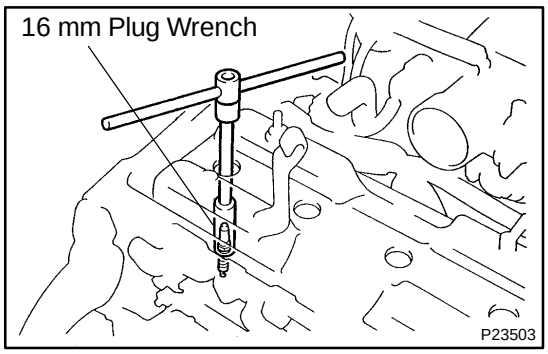

2. INSPECT SPARK PLUGS

(a) Remove the ignition coils.

(b) Using a 16 mm plug wrench, remove the 4 spark plug.

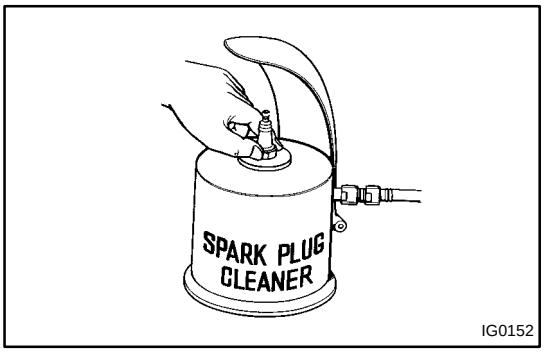

(c) Using a spark plug cleaner or wire brush, clean the spark plug.

(d) Check the spark plug for electrode wear, threads damage and insulator damage.

If abnormal, replace the plugs.

Recommended spark plug:

DENSO made	K16R–U11
NGK made	BKR5EYA–U

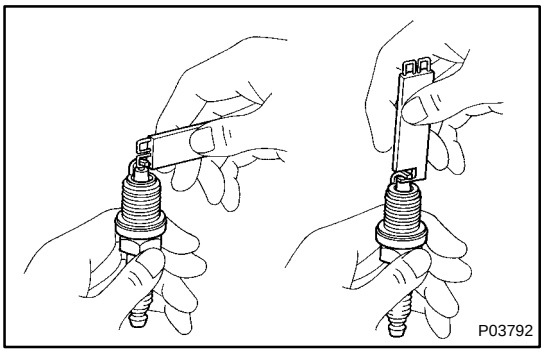

(e) Adjust the electrod gap.
Carefully bend the outer electrode to obtain the correct electrode gap.
Correct electrode gap: 0.8 mm (0.031 in.)

(f) Using a 16 mm plug wrench, reinstall the 4 spark plug.
Torque: 20 N·m (200 kgf·cm, 14 ft·lbf)

(g) Reinstall the ignition coil.

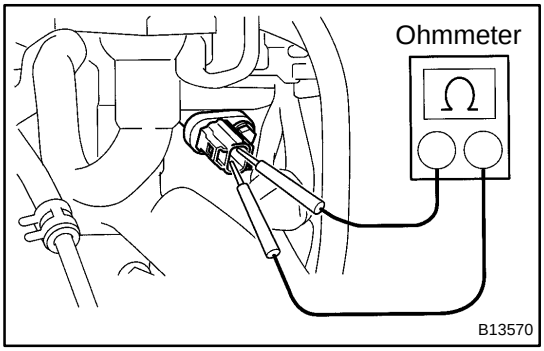

3. INSPECTION CAMSHAFT POSITION SENSOR

(a) Disconnect the sensor connector.

(b) Using an ohmmeter, measure the resistance between the terminals.

Resistance:

Cold	835 – 1,400 Ω
Hot	1,060 – 1,645 Ω

If the resistance is not as specified, replace the sensor (See page IG–6).

(c) Reconnect the camshaft position sensor connector.

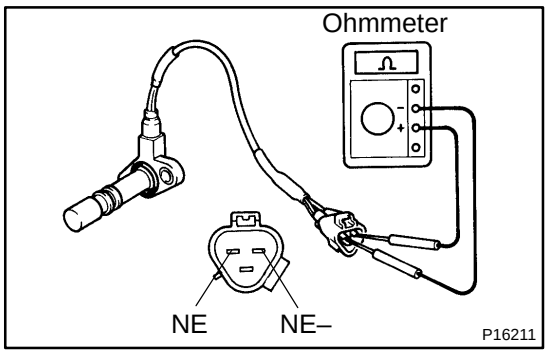

4. INSPECT CRANKSHAFT POSITION SENSOR

(a) Remove the sensor (See page IG–7).

(b) Using an ohmmeter, measure the resistance between terminals NE and NE–.

Resistance:

Cold	1,630 – 2,740 kΩ
Hot	2,065 – 3,225 kΩ

If the resistance is not as specified, replace the sensor (See page IG–7).

(c) Reinstall the sensor.

CAMSHAFT POSITION SENSOR

IG020–02

COMPONENTS

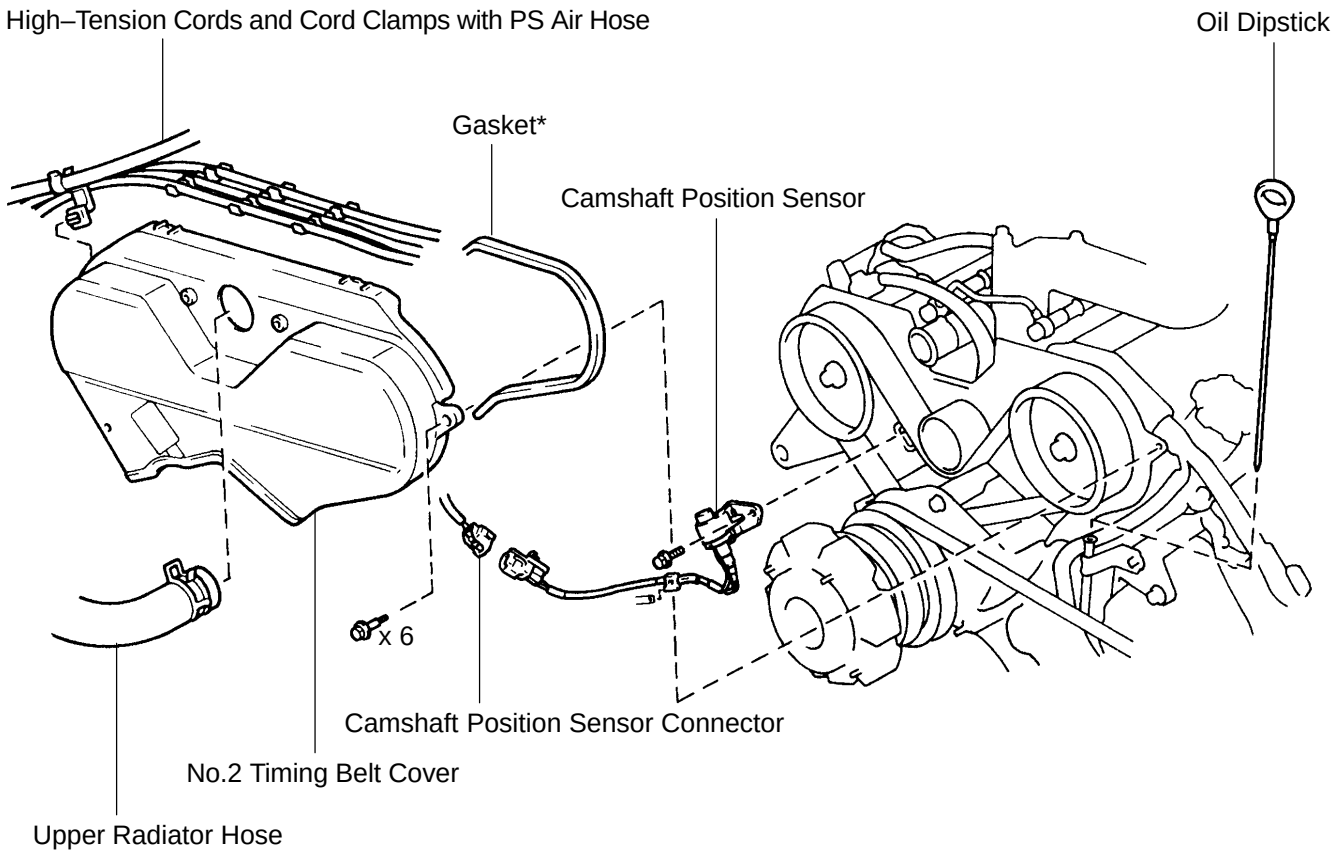

* Replace only if damaged

S02422

IG0FD–02

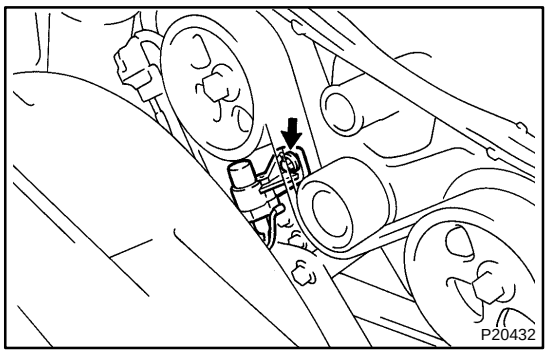

REPLACEMENT

1. REMOVE NO.2 TIMING BELT COVER
(See page EM–13)

2. REMOVE CAMSHAFT POSITION SENSOR

(a) Disconnect the sensor connector.

(b) Remove the bolt and sensor.

3. REINSTALL NEW CAMSHAFT POSITION SENSOR

(a) Install a new sensor with the bolt.
Torque: 7.8 N·m (80 kgf·cm, 69 in.·lbf)

(b) Connect the sensor connector.

4. REINSTALL NO.2 TIMING BELT COVER
(See page EM–19)

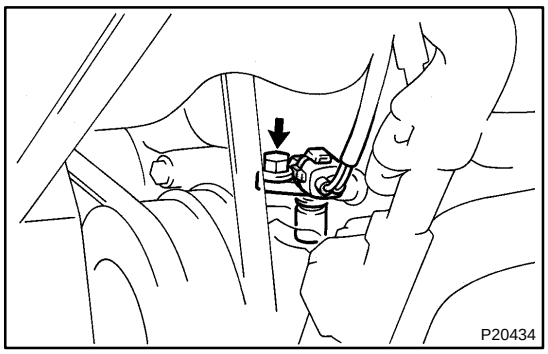

CRANKSHAFT POSITION SENSOR

IG0FE–02

REPLACEMENT

1. REMOVE ENGINE UNDER COVER

2. REMOVE CRANKSHAFT POSITION SENSOR

(a) Disconnect the sensor connector.

(b) Remove the bolt and sensor.

Torque: 7.8 N·m (80 kgf·cm, 69 in.·lbf)

3. REINSTALL NEW CRANKSHAFT POSITION SENSOR

(a) Install the sensor with the bolt.

(b) Connect the sensor connector.

4. REINSTALL ENGINE UNDER COVER

IGNITION COIL

COMPONENTS

IG01U–04

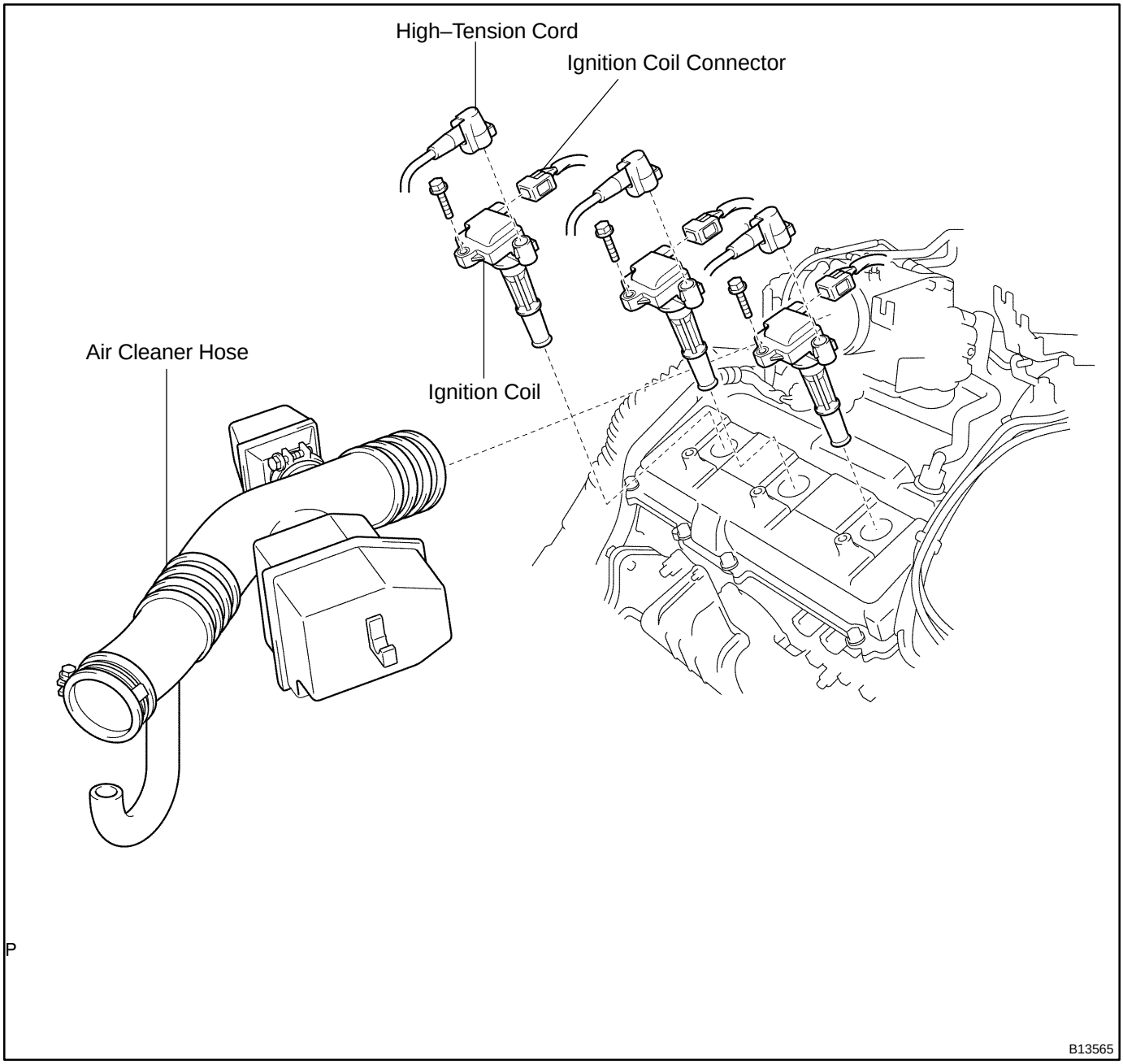

IG0FC–01

REPLACEMENT

1. REMOVE AIR CLEANER HOSE

2. DISCONNECT HIGH–TENSION CORDS FROM IGNITION COILS

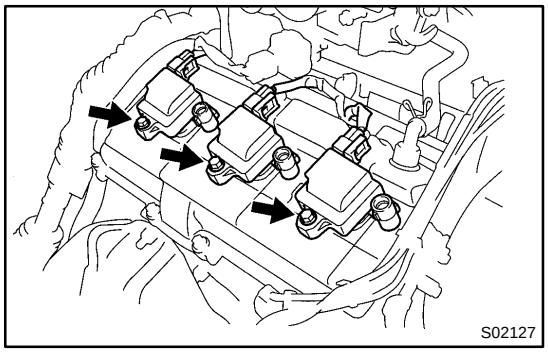

3. REMOVE IGNITION COILS

(a) Disconnect the connector from the ignition coil.

(b) Remove the bolt and ignition coil from the LH cylinder head.

4. REINSTALL NEW IGNITION COILS

(a) Connect a new ignition coil to the spark plug, and attach the ignition coil to the cylinder head cover.

(b) Install the ignition coil with the bolt.

Torque: 7.8 N·m (80 kgf·cm, 69 in.·lbf)

5. RECONNECT HIGH–TENSION CORDS TO IGNITION COILS

6. REINSTALL AIR CLEANER HOSE

IGNITION SYSTEM

IG0FB–02

ON–VEHICLE INSPECTION

NOTICE:

"Cold" and "Hot" in these sentences express the temperature of the coils themselves. "Cold" is from –10˚C (14˚F) to 50˚C (122˚F) and "Hot" is from 50˚C (122˚F) to 100˚C (212˚F).

1. INSPECT IGNITOR AND SPARK TEST

Check that the spark occurs.

(1) Disconnect high–tension cords from spark plug.
(2) Remove the spark plug.
(3) Install the spark plug to each high–tension cord.
(4) Ground the spark plug.
(5) Check if spark occurs while engine is being cranked.

NOTICE:

To prevent excess fuel being injected from the injectors during this test, do not crank the engine for more 5 – 10 seconds at a time.

If the spark does not occur, do the test as follows:

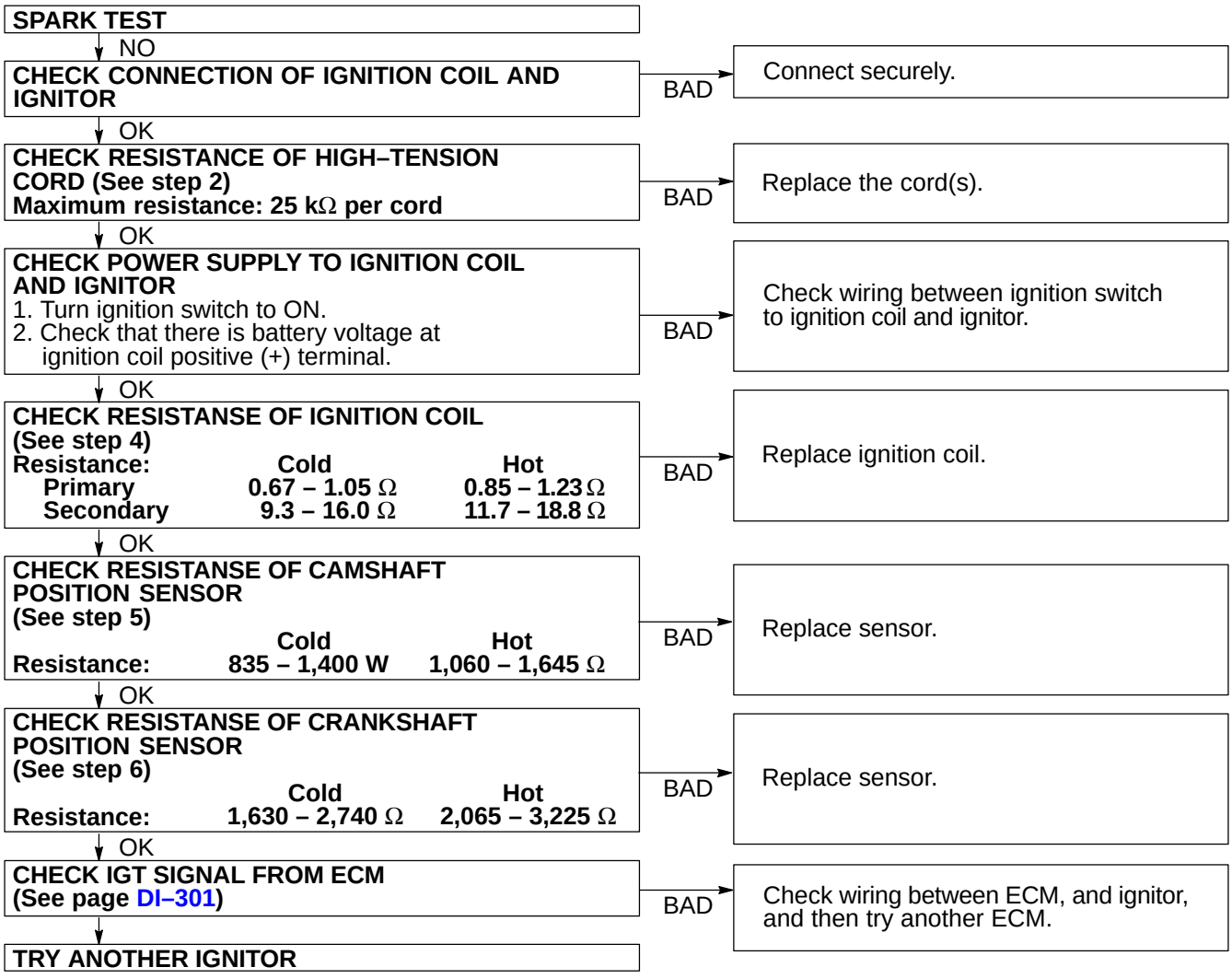

(6) Using a 16 mm plug wrench, install the spark plugs.
Torque: 18 N·m (195 kgf·cm, 15 ft·lbf)
(7) Reinstall the ignition coil with ignitor.

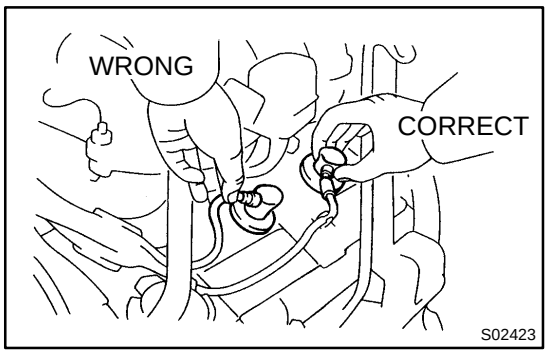

2. INSPECT HIGH–TENSION CORDS

(a) Remove the air cleaner hose.

(b) Disconnect the high–tension cords at the rubber boot. Do not pull on the high–tension cords.

NOTICE:

Pulling on or bending the cords may damage the conductor inside.

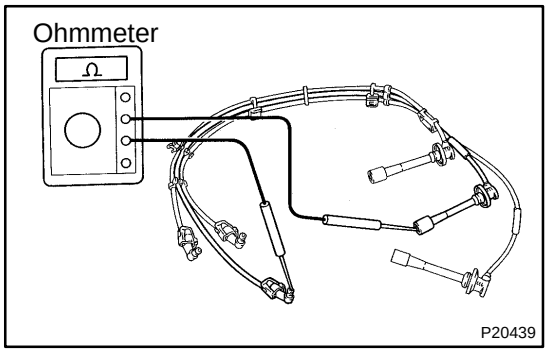

(c) Using an ohmmeter, measure the high–tension cord resistance.

Maximum resistance: 25 kΩ per cord

If the resistance is greater than maximum, check the terminals. If necessary, replace the high–tension cord.

(d) Reconnect and install the high–tension cords as shown in the illustration.

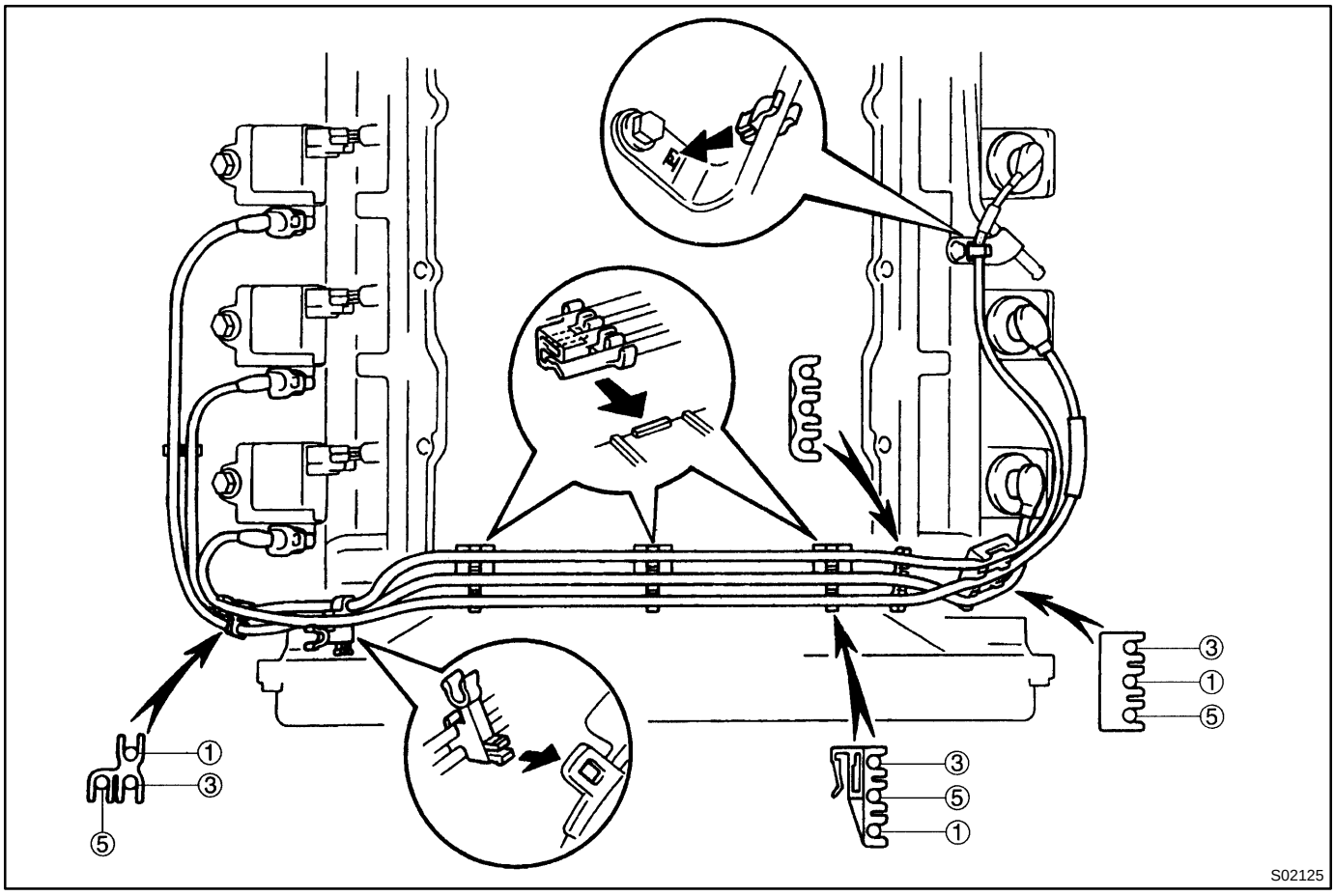

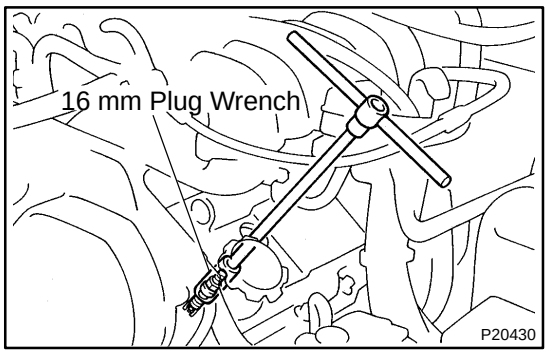

3. INSPECT SPARK PLUGS

(a) Disconnect the 3 high–tension cords.

(b) Remove the 3 ignition coils.

(c) Using a 16 mm plug wrench, remove the 6 spark plugs.

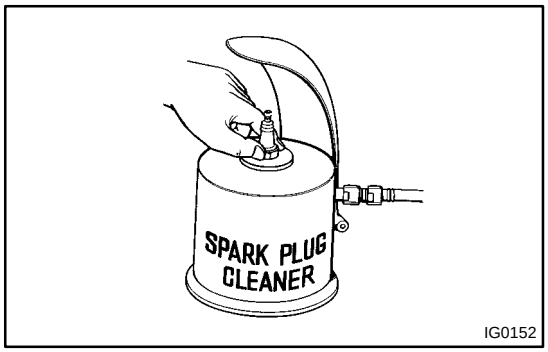

(d) Clean the spark plugs.

If the electrode has traces of wet carbon, allow it to dry and then clean with a spark plug cleaner.

Air pressure: Below 588 kPa (6 kgf/cm^2, 85 psi)

Duration: 20 seconds or less

HINT:

If there are traces of oil, remove it with gasoline before using the spark plug cleaner.

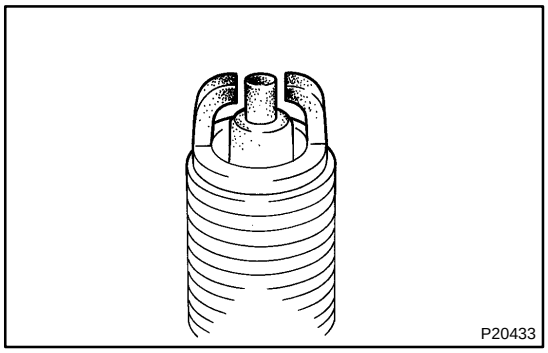

(e) Visually check the spark plug for thread damage and insulator damage.

If abnormal, replace the spark plug.

Recommended spark plug:

DENSO made	K16TR11
NGK made	BKR5EKB–11

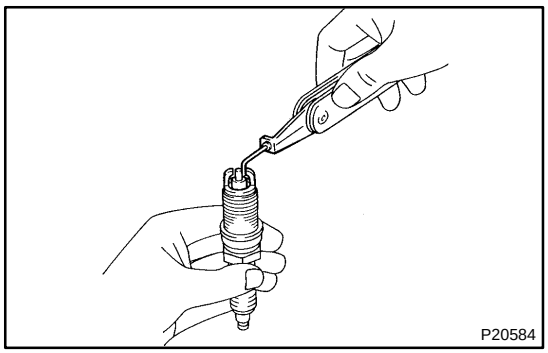

(f) Adjust the electrode gap.

Carefully bend the outer electrode to obtain the correct electrode gap.

Correct electrode gap: 1.1 mm (0.043 in.)

(g) Using a 16 mm plug wrench, reinstall the spark plugs.

Torque: 18 N·m (180 kgf·cm, 13 ft·lbf)

(h) Reinstall the 3 ignition coils.

(i) Reconnect the 3 high–tension cords.

4. INSPECT IGNITION COIL

(a) Remove the air cleaner hose.

(b) Disconnect the high–tension cords and ignition coil connectors from the ignition coils.

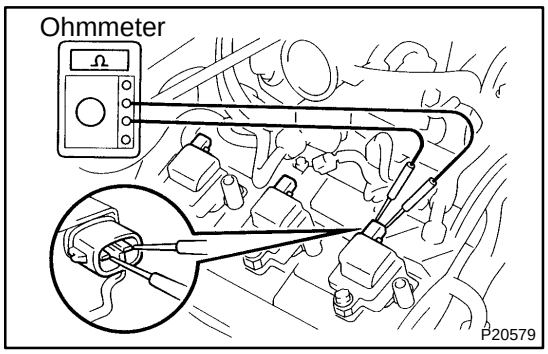

(c) Inspect the primary coil resistance.
Using an ohmmeter, measure the resistance between the positive (+) and negative (–) terminals.
Primary coil resistance:

Cold	0.67 – 1.05 Ω
Hot	0.85 – 1.23 Ω

If the resistance is not as specified, replace the ignition coil.
(d) Remove the ignition coils.

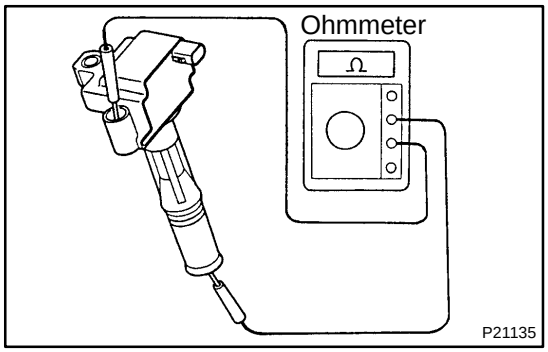

(e) Inspect the secondary coil resistance.
Using an ohmmeter, measure the resistance between the positive (+) and high–tension terminals.
Secondary coil resistance:

Cold	9.3 – 16.0 Ω
Hot	11.7 – 18.8 Ω

If the resistance is not as specified, replace the ignition coil.
(f) Reinstall the ignition coils.
(g) Reconnect the ignition coil connectors and the high–tension cords.
(h) Reinstall the air cleaner hose.

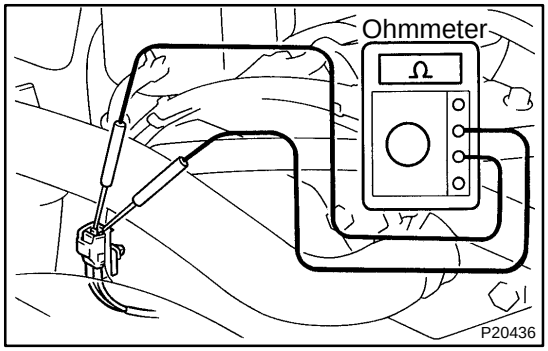

5. INSPECT CAMSHAFT POSITION SENSOR
(a) Disconnect the sensor connector.
(b) Using an ohmmeter, measure the resistance between the terminals.
Resistance:

Cold	835 – 1,400 Ω
Hot	1,060 – 1,645 Ω

If the resistance is not as specified, replace the sensor (See page IG–9).
(c) Reconnect the camshaft position sensor connector.

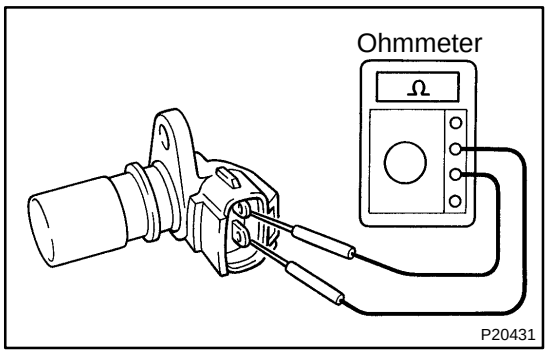

6. INSPECT CRANKSHAFT POSITION SENSOR

(a) Remove the sensor connector (See page IG–10).

(b) Using an ohmmeter, measure the resistance between the terminals.

Resistance:

Cold	1,630 – 2,740 Ω
Hot	2,065 – 3,225 Ω

(c) Reinstall the sensor.

FOR ALL OF VEHICLES

IN0DB–05

PRECAUTION

1. FOR VEHICLES EQUIPPED WITH SRS AIRBAG AND SEAT BELT PRETENSIONER

(a) The TOYOTA TACOMA is equipped with an SRS (Supplemental Restraint System), such as the driver airbag, front passenger airbag assembly and seat belt pretensioner.

Failure to carry out service operations in the correct sequence could cause the supplemental restraint system to unexpectedly deploy during servicing, possibly leading to a serious accident.

Further, if a mistake is made in servicing the supplemental restraint system, it is possible the SRS may fail to operate when required. Before servicing (including removal or installation of parts, inspection or replacement), be sure to read the following items carefully, then follow the correct procedure described in this manual.

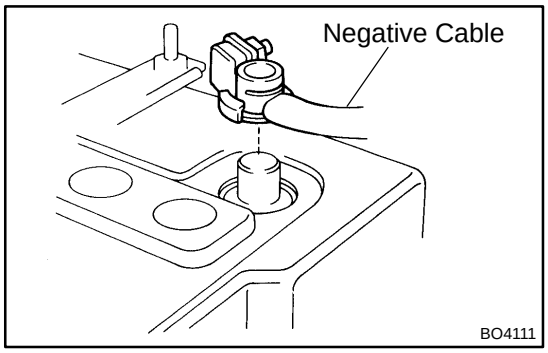

(b) GENERAL NOTICE

(1) Malfunction symptoms of the supplemental restraint system are difficult to confirm, so the diagnostic trouble codes become the most important source of information when troubleshooting. When troubleshooting the supplemental restraint system, always inspect the diagnostic trouble codes before disconnecting the battery (See page DI–588).

(2) Work must be started after 90 seconds from the time the ignition switch is turned to the ”LOCK” position and the negative (–) terminal cable is disconnected from the battery.

(The supplemental restraint system is equipped with a back–up power source so that if work is started within 90 seconds of disconnecting the negative (–) terminal cable from the battery, the SRS may deploy.)

When the negative (–) terminal cable is disconnected from the battery, memory of the clock and audio systems will be cancelled. So before starting work, make a record of the contents memorized by the each memory system. Then when work is finished, reset the clock and audio systems as before.

To avoid erasing the memory of each memory system, never use a back–up power supply from another battery.

(3) Even in cases of a minor collision where the SRS does not deploy, the steering wheel pad (See page RS–12), front passenger airbag assembly (See page RS–26) and seat belt pretensioner (See page BO–109) should be inspected.
(4) Never use SRS parts from another vehicle. When replacing parts, replace them with new parts.
(5) Before repairs, remove the airbag sensor if shocks are likely to be applied to the sensor during repairs.
(6) Never disassemble and repair the airbag sensor assembly, steering wheel pad, front passenger airbag assembly or seat belt pretensioner.
(7) If the airbag sensor assembly, steering wheel pad, front passenger airbag assembly or seat belt pretensioner has been dropped, or if there are cracks, dents or other defects in the case, bracket or connector, replace them with new ones.
(8) Do not directly expose the airbag sensor assembly, steering wheel pad, front passenger airbag assembly or seat belt pretensioner to hot air or flames.
(9) Use a volt/ohmmeter with high impedance (10 kΩ/V minimum) for troubleshooting of the electrical circuit.
(10) Information labels are attached to the periphery of the SRS components. Follow the instructions on the notices.
(11) After work on the supplemental restraint system is completed, check the SRS warning light (See page DI–588).

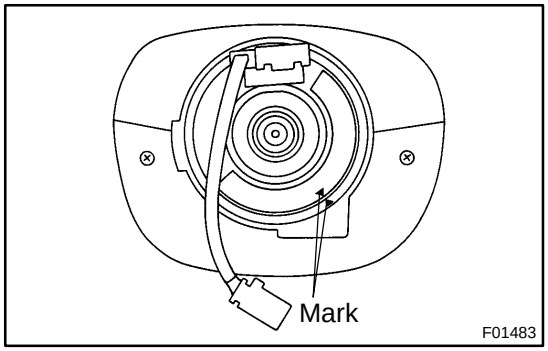

(c) SPIRAL CABLE (in Combination Switch)
The steering wheel must be fitted correctly to the steering column with the spiral cable at the neutral position, otherwise cable disconnection and other troubles may result. Refer to SR–21 concerning correct steering wheel installation.

(d) STEERING WHEEL PAD (with Airbag)

(1) When removing the steering wheel pad or handling a new steering wheel pad, it should be placed with the pad top surface facing up.
Storing the pad with its metallic surface upward may lead to a serious accident if the airbag inflates for some reason. In addition do not store a steering wheel pad on top of another one.

(2) Never measure the resistance of the airbag squib. (This may cause the airbag to deploy, which is very dangerous.)

(3) Grease should not be applied to the steering wheel pad and the pad should not be cleaned with detergents of any kind.

(4) Store the steering wheel pad where the ambient temperature remains below 93˚C (200˚F), without high humidity and away from electrical noise.

(5) When using electric welding, first disconnect the airbag connector (yellow color and 2 pins) under the steering column near the combination switch connector before starting work.

(6) When disposing of a vehicle or the steering wheel pad alone, the airbag should be deployed using an SST before disposal (See page RS–14).
Perform the operation in a safe place away from electrical noise.

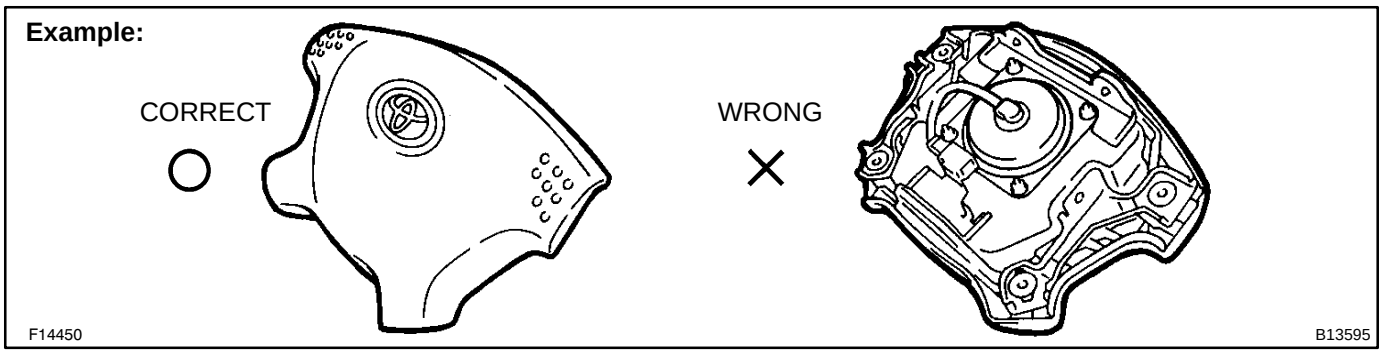

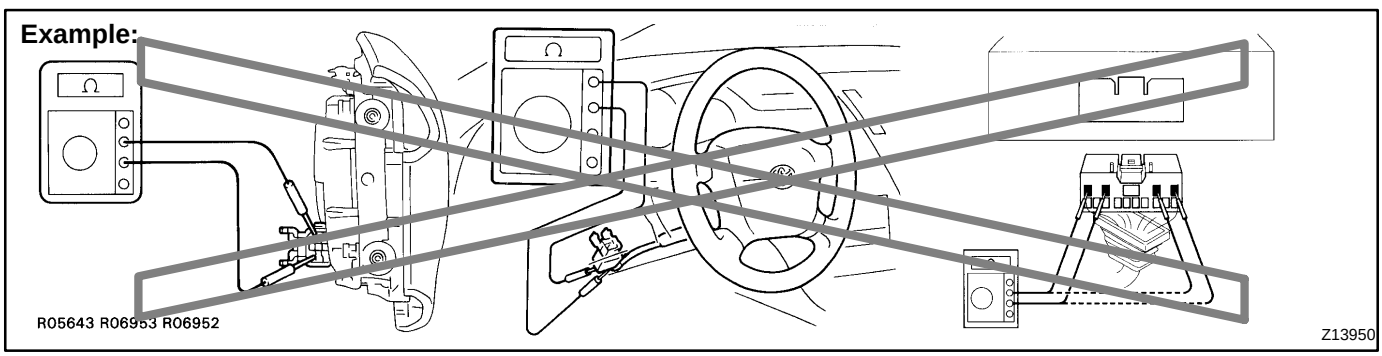

(e) FRONT PASSENGER AIRBAG ASSEMBLY

(1) Always store a removed or new front passenger airbag assembly with the airbag deployment direction facing up.
Storing the airbag assembly with the airbag deployment direction facing down could cause a serious accident if the airbag deploys.

(2) Never measure the resistance of the airbag squib. (This may cause the airbag to deploy, which is very dangerous.)

(3) Grease should not be applied to the front passenger airbag assembly and the airbag door should not be cleaned with detergents of any kind.

(4) Store the airbag assembly where the ambient temperature remains below 93˚C (200˚F), without high humidity and away from electrical noise.

(5) When using electric welding, first disconnect the airbag connector (yellow color and 2 pins) installed on assembly before starting work.

(6) When disposing of a vehicle or the airbag assembly alone, the airbag should be deployed using an SST before disposal (See page RS–28).
Perform the operation in a safe place away from electrical noise.

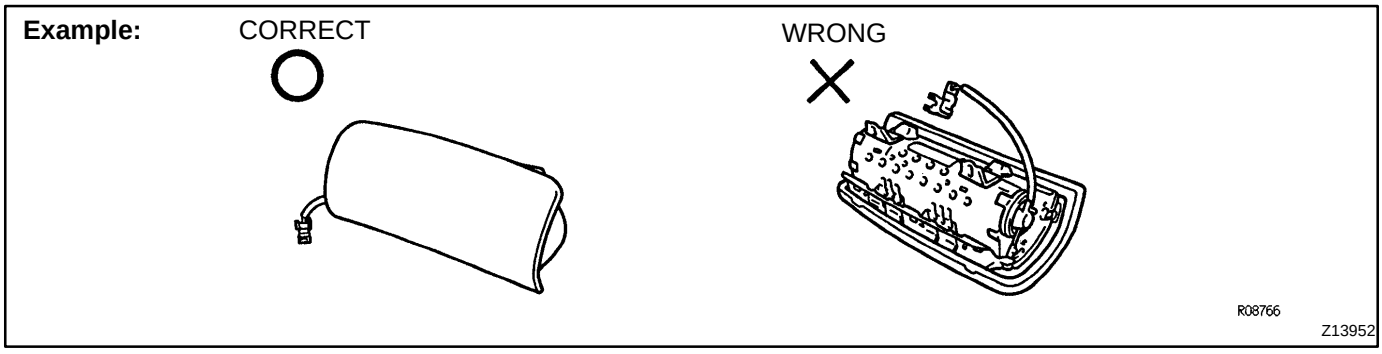

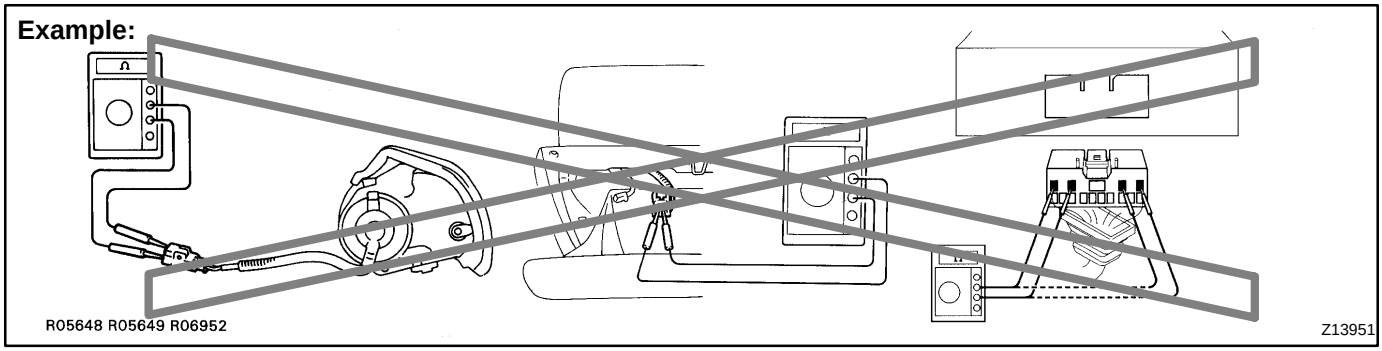

(f) SEAT BELT PRETENSIONER

(1) Never measure the resistance of the seat belt pretensioner. (This may cause the seat belt pretensioner activation which is very dangerous.)

(2) Never disassemble the seat belt pretensioner.

(3) Never install the seat belt pretensioner in another vehicle.

(4) Store the seat belt pretensioner where the ambient temperature remains below 80°C (176°F) and away from electrical noise without high humidity.

(5) When using electric welding, first disconnect the connector (yellow color and 2 pins) before starting work.

(6) When disposing of a vehicle or the seat belt pretensioner alone, the seat belt pretensioner should be activated before disposal (See page BO–110). Perform the operation in a safe place away from electrical noise.

(7) The seat belt pretensioner is hot after activation, so let it cool down sufficiently before the disposal. However never apply water to the seat belt pretensioner.

Example:

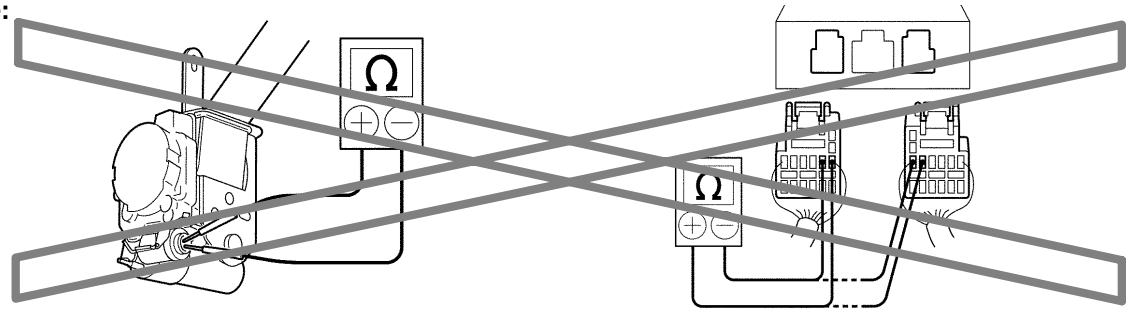

(g) AIRBAG SENSOR ASSEMBLY

(1) Never reuse the airbag sensor assembly involved in a collision when the SRS has deployed.

(2) The connectors to the airbag sensor assembly should be connected or disconnected with the sensor mounted on the floor. If the connectors are connected or disconnected while the airbag sensor assembly is not mounted to the floor, it could cause undesired ignition of the supplemental restraint system.

(3) Work must be started after 90 seconds from the time the ignition switch is turned to the ”LOCK” position and the negative (–) terminal cable is disconnected from the battery, even if only loosening the set bolts of the airbag sensor assembly.

(h) WIRE HARNESS AND CONNECTOR

The SRS wire harness is integrated with the cowl wire harness assembly and floor wire harness assembly. All the connectors for the system are also a standard yellow color. If the SRS wire harness becomes disconnected or the connector becomes broken due to an accident, etc., repair or replace it.

2. FOR VEHICLES EQUIPPED WITH A CATALYTIC CONVERTER

CAUTION:

If large amount of unburned gasoline flows into the converter, it may overheat and create a fire hazard. To prevent this, observe the following precautions and explain them to your customer.

(a) Use only unleaded gasoline.

(b) Avoid prolonged idling.
Avoid running the engine at idle speed for more than 20 minutes.

(c) Avoid spark jump test.
(1) Perform spark jump test only when absolutely necessary. Perform this test as rapidly as possible.
(2) While testing, never race the engine.

(d) Avoid prolonged engine compression measurement
Engine compression tests must be done as rapidly as possible.

(e) Do not run engine when fuel tank is nearly empty.
This may cause the engine to misfire and create an extra load on the converter.

(f) Avoid coasting with ignition turned off.

(g) Do not dispose of used catalyst along with parts contaminated with gasoline or oil.

3. IF VEHICLE IS EQUIPPED WITH MOBILE COMMUNICATION SYSTEM

For vehicles with mobile communication systems such as two–way radios and cellular telephones, observe the following precautions.

(1) Install the antenna as far as possible away from the ECU and sensors of the vehicle's electronic system.

(2) Install the antenna feeder at least 20 cm (7.87 in.) away from the ECU and sensors of the vehicle's electronic systems. For details about ECU and sensors locations, refer to the section on the applicable component.

(3) Do not wind the antenna feeder together with the other wiring as much as possible, also avoid running the antenna feeder parallel with other wire harness.

(4) Check that the antenna and feeder are correctly adjusted.

(5) Do not install powerful mobile communications system.

4. FOR USING OBD II SCAN TOOL OR TOYOTA HAND–HELD TESTER

CAUTION:

Observe the following for safety reasons:

- **Before using the OBD II scan tool or TOYOTA hand–held tester, the OBD II scan tool's instruction book or TOYOTA hand–held tester's operator manual should be read thoroughly.**
- **Be sure to route all cables securely when driving with the OBD II scan tool or TOYOTA hand–held tester connected to the vehicle. (i.e. Keep cables away from feet, pedals, steering wheel and shift lever.)**
- **Two persons are required when test driving with the OBD II scan tool or TOYOTA hand–held tester, one person to drive the vehicle and one person to operate the OBD II scan tool or TOYOTA hand–held tester.**

HOW TO TROUBLESHOOT ECU CONTROLLED SYSTEMS

IN01T–14

GENERAL INFORMATION

A large number of ECU controlled systems are used in the TOYOTA TACOMA. In general, the ECU controlled system is considered to be a very intricate system requiring a high level of technical knowledge and expert skill to troubleshoot. However, the fact is that if you proceed to inspect the circuits one by one, troubleshooting of these systems is not complex. If you have adequate understanding of the system and a basic knowledge of electricity, accurate diagnosis and necessary repair can be performed to locate and fix the problem. This manual is designed through emphasis of the above standpoint to help service technicians perform accurate and effective troubleshooting, and is compiled for the following major ECU controlled systems:

The troubleshooting procedure and how to make use of it are described on the following pages.

System	Page
1. Engine (2RZ–FE, 3RZ–FE)	DI–1
2. Engine (5VZ–FE)	DI–216
3. Automatic Transmission (A340E, A340F)	DI–454
4. Anti–Lock Brake System	DI–532
5. Supplemental Restraint System	DI–586
6. Cruise Control System (w/ ETCS–i)	DI–689
7. Cruise Control System (w/o ETCS–i)	DI–719
8. Body Control System	DI–765

FOR USING OBD II SCAN TOOL OR HAND–HELD TESTER

- Before using the scan tool or tester, the scan tool's instruction book or tester's operator manual should be read thoroughly.
- If the scan tool or tester cannot communicate with ECU controlled systems when you have connected the cable of the scan tool or tester to DLC3, turned the ignition switch ON and operated the scan tool, there is a problem on the vehicle side or tool side.
  (1) If communication is normal when the tool is connected to another vehicle, inspect the diagnosis data link line (Bus⊕line) or ECU power circuit of the vehicle.
  (2) If communication is still not possible when the tool is connected to another vehicle, the problem is probably in the tool itself, so perform the Self Test procedures outline in the Tester Operator's Manual.

IN01U–11

HOW TO PROCEED WITH TROUBLESHOOTING

Carry out troubleshooting in accordance with the procedure on the following page. Here, only the basic procedure is shown. Details are provided in Diagnostics section, showing the most effective methods for each circuit. Confirm the troubleshooting procedures first for the relevant circuit before beginning troubleshooting of that circuit.

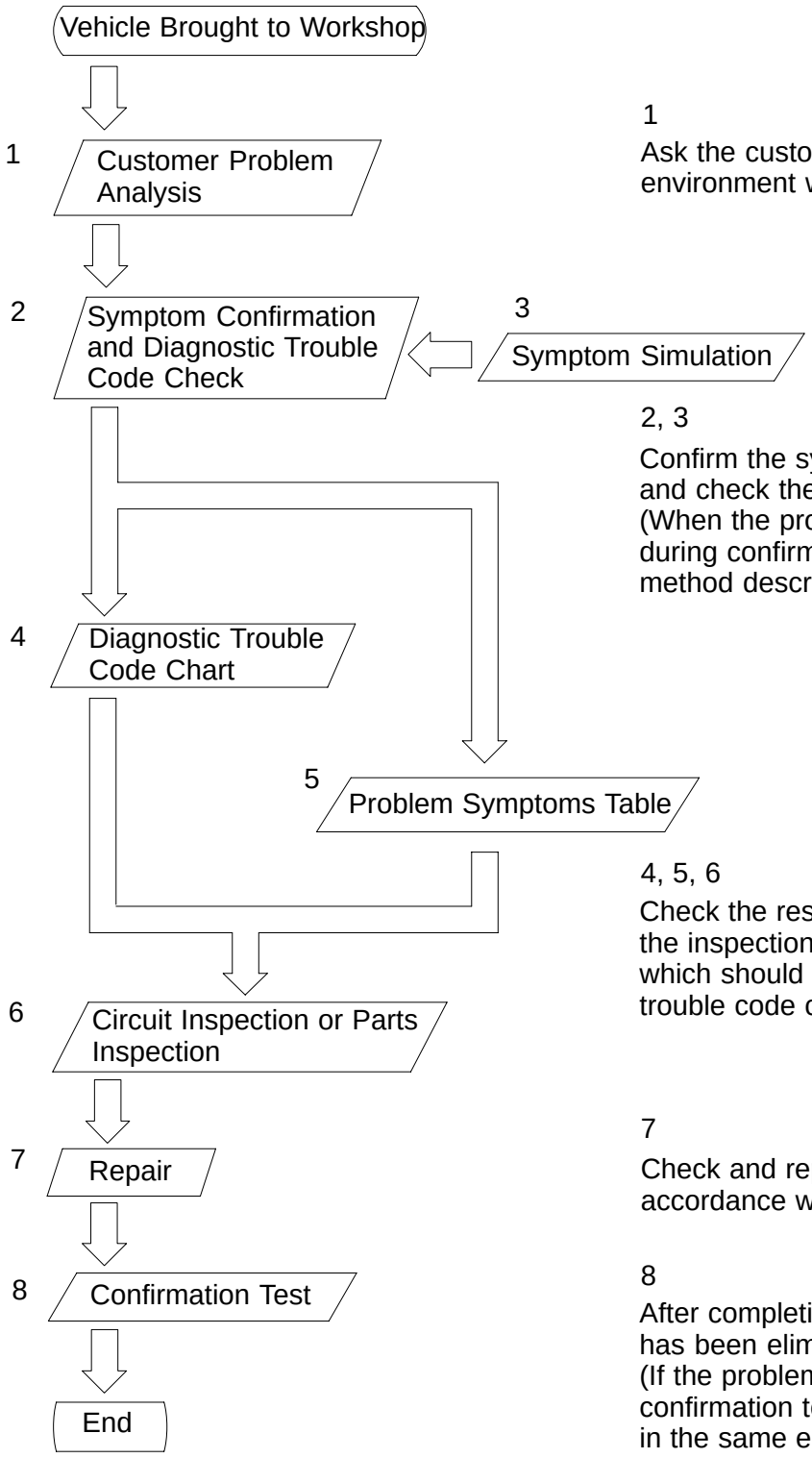

1

Ask the customer about the conditions and the environment when the problem occurred.

2, 3

Confirm the symptoms and the problem conditions, and check the diagnostic trouble codes.
(When the problem symptoms do not appear during confirmation, use the symptom simulation method described later on.)

4, 5, 6

Check the results obtained in Step 2, then confirm the inspection procedure for the system or the part which should be checked using the diagnostic trouble code chart or the problem symptoms table.

7

Check and repair the affected system or part in accordance with the instructions in Step 6.

8

After completing repairs, confirm that the problem has been eliminated.
(If the problem is not reproduced, perform the confirmation test under the same conditions and in the same environment as when it occurred for the first time.)

1. CUSTOMER PROBLEM ANALYSIS

In troubleshooting, the problem symptoms must be confirmed accurately and all preconceptions must be cleared away in order to give an accurate judgment. To ascertain just what the problem symptoms are, it is extremely important to ask the customer about the problem and the conditions at the time it occurred.

Important Point in the Problem Analysis:

The following 5 items are important points in the problem analysis. Past problems which are thought to be unrelated and the repair history, etc. may also help in some cases, so as much information as possible should be gathered and its relationship with the problem symptoms should be correctly ascertained for reference in troubleshooting. A customer problem analysis table is provided in Diagnostics section for each system for your use.

Important Points in the Customer Problem Analysis

- What ——— Vehicle model, system name
- When ——— Date, time, occurrence frequency
- Where ——— Road conditions
- Under what conditions? ——— Running conditions, driving conditions, weather conditions
- How did it happen? ——— Problem symptoms

(Sample) Engine control system check sheet.

CUSTOMER PROBLEM ANALYSIS CHECK

ENGINE CONTROL SYSTEM Check Sheet

Inspector's Name _____

Customer's Name		**Model and Model Year**	
Driver's Name		**Frame No.**	
Data Vehicle Brought in		**Engine Model**	
License No.		**Odometer Reading**	km miles

Problem Symptoms	☐ **Engine does not Start**	☐ **Engine does not crank** ☐ **No initial combustion** ☐ **No complete combustion**
	☐ **Difficult to Start**	☐ **Engine cranks slowly** ☐ **Other** _____
	☐ **Poor Idling**	☐ **Incorrect first idle** ☐ **Idling rpm is abnormal** ☐ **High (rpm)** ☐ **Low (rpm)** ☐ **Rough idling** ☐ **Other** _____
	☐ **Poor Drive ability**	☐ **Hesitation** ☐ **Back fire** ☐ **Muffler explosion (after–fire)** ☐ **Surging** ☐ **Knocking** ☐ **Other** _____
	☐ **Engine Stall**	☐ **Soon after starting** ☐ **After accelerator pedal depressed** ☐ **After accelerator pedal released** ☐ **During A/C operation** ☐ **Shifting from N to D** ☐ **Other** _____
	☐ **Others**	

☐ **onstant** ☐ **Sometimes (times per day/month)**

2. SYMPTOM CONFIRMATION AND DIAGNOSTIC TROUBLE CODE CHECK

The diagnostic system in the TOYOTA TACOMA fulfills various functions. The first function is the Diagnostic Trouble Code Check in which a malfunction in the signal circuits to the ECU is stored in code in the ECU memory at the time of occurrence, to be output by the technician during troubleshooting. Another function is the Input Signal Check which checks if the signals from various switches are sent to the ECU correctly. By using these check functions, the problem areas can be narrowed down quickly and troubleshooting can be performed effectively. Diagnostic functions are incorporated in the following systems in the TOYOTA TACOMA.

System	Diagnostic Trouble Code Check	Input Signal Check (Sensor Check)	Diagnostic Test Mode (Active Test)
1. Engine (2RZ–FE, 3RZ–FE)	○ (with Check Mode)	○	○
2. Engine (5VZ–FE)	○ (with Check Mode)	○	○
3. Automatic Transmission	○ (with Check Mode)	○	
4. Anti–Lock Brake System	○	○	
5. Supplemental Restraint System	○		
6. Cruise Control System (w/ ETCS–i)	○	○	
7. Cruise Control System (w/o ETCS–i)	○	○	

In diagnostic trouble code check, it is very important to determine whether the problem indicated by the diagnostic trouble code is still occurring or occurred in the past but returned to normal at present. In addition, it must be checked in the problem symptom check whether the malfunction indicated by the diagnostic trouble code is directly related to the problem symptom or not. For this reason, the diagnostic trouble codes should be checked before and after the symptom confirmation to determine the current conditions, as shown in the table below. If this is not done, it may, depending on the case, result in unnecessary troubleshooting for normally operating systems, thus making it more difficult to locate the problem, or in repairs not pertinent to the problem. Therefore, always follow the procedure in correct order and perform the diagnostic trouble code check.

DIAGNOSTIC TROUBLE CODE CHECK PROCEDURE

Diagnostic Trouble Code Check (Make a note of and then clear)	**Confirmation of Symptoms**	**Diagnostic Trouble Code Check**	**Problem Condition**
Diagnostic Trouble Code Display	Problem symptoms exist	Same diagnostic trouble code is displayed	Problem is still occurring in the diagnostic circuit
⇨		Normal code is displayed	The problem is still occurring in a place other than in the diagnostic circuit (The diagnostic trouble code displayed first is either for a past problem or it is a secondary problem)
⇨	No problem symptoms exist		The problem occurred in the diagnostic circuit in the past
Normal Code Display ⇨	Problem symptoms exist	Normal code is displayed	The problem is still occurring in a place other than in the diagnostic circuit
⇨	No problem symptoms exist	Normal code is displayed	The problem occurred in a place other than in the diagnostic circuit in the past

Taking into account the points on the previous page, a flow chart showing how to proceed with troubleshooting using the diagnostic trouble code check is shown below. This flow chart shows how to utilize the diagnostic trouble code check effectively, then by carefully checking the results, indicates how to proceed either to diagnostic trouble code troubleshooting or to troubleshooting of problem symptoms table.

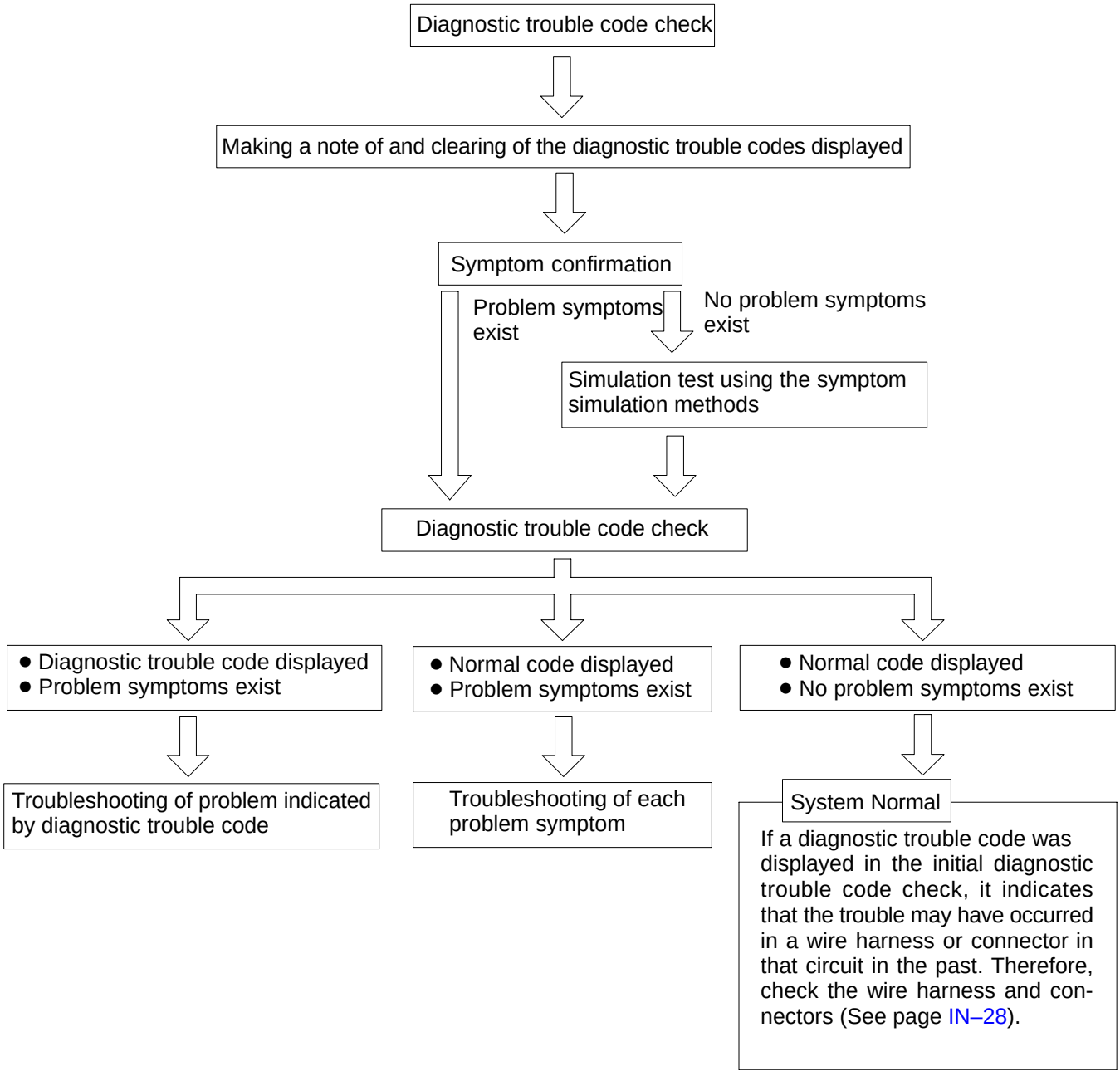

3. SYMPTOM SIMULATION

The most difficult case in troubleshooting is when there are no problem symptoms occurring. In such cases, a thorough customer problem analysis must be carried out, then simulate the same or similar conditions and environment in which the problem occurred in the customer's vehicle. No matter how much experience a technician has, or how skilled he may be, if he proceeds to troubleshoot without confirming the problem symptoms he will tend to overlook something important in the repair operation and make a wrong guess somewhere, which will only lead to a standstill. For example, for a problem which only occurs when the engine is cold, or for a problem which occurs due to vibration caused by the road during driving, etc., the problem can never be determined so long as the symptoms are confirmed with the engine hot condition or the vehicle at a standstill. Since vibration, heat or water penetration (moisture) is likely cause for problem which is difficult to reproduce, the symptom simulation tests introduced here are effective measures in that the external causes are applied to the vehicle in a stopped condition.

Important Points in the Symptom Simulation Test:

In the symptom simulation test, the problem symptoms should of course be confirmed, but the problem area or parts must also be found out. To do this, narrow down the possible problem circuits according to the symptoms before starting this test and connect a tester beforehand. After that, carry out the symptom simulation test, judging whether the circuit being tested is defective or normal and also confirming the problem symptoms at the same time. Refer to the problem symptoms table for each system to narrow down the possible causes of the symptom.

1	**VIBRATION METHOD: When vibration seems to be the major cause.**
CONNECTORS Slightly shake the connector vertically and horizontally. **WIRE HARNESS** Slightly shake the wire harness vertically and horizontally. The connector joint, fulcrum of the vibration, and body through portion are the major areas to be checked thoroughly.	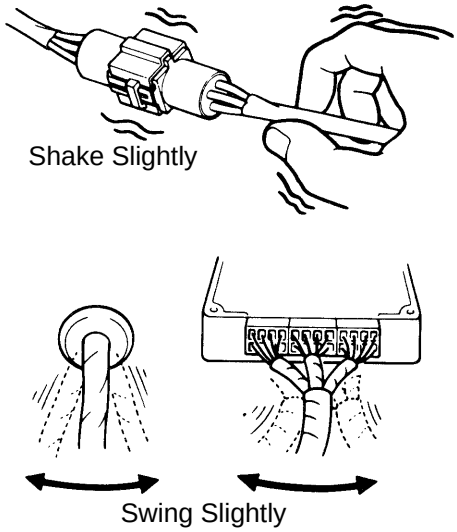 FI2331 FI2332
PARTS AND SENSOR Apply slight vibration with a finger to the part of the sensor considered to be the problem cause and check that the malfunction occurs. HINT: Applying strong vibration to relays may result in open relays.	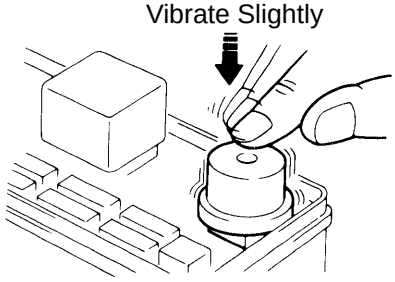 FI2330

V07268

2	HEAT METHOD: When the problem seems to occur when the suspect area is heated.

Heat the component that is the likely cause of the malfunction with a hair dryer or similar object. Check to see if the malfunction occurs.

NOTICE:

(1) Do not heat to more than 60˚C (140˚F). (Temperature is limited not to damage the components.)

(2) Do not apply heat directly to parts in the ECU.

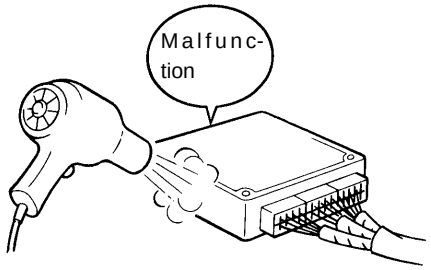

FI2334

3	WATER SPRINKLING METHOD: When the malfunction seems to occur on a rainy day or in a high–humidity condition.

Sprinkle water onto the vehicle and check to see if the malfunction occurs.

NOTICE:

(1) Never sprinkle water directly into the engine compartment, but indirectly change the temperature and humidity by applying water spray onto the radiator front surface.

(2) Never apply water directly onto the electronic components.

HINT:

If a vehicle is subject to water leakage, the leaked water may contaminate the ECU. When testing a vehicle with a water leakage problem, special caution must be taken.



FI6649

4	OTHER: When a malfunction seems to occur when electrical load is excessive.

Turn on all electrical loads including the heater blower, head lights, rear window defogger, etc. and check to see if the malfunction occurs.

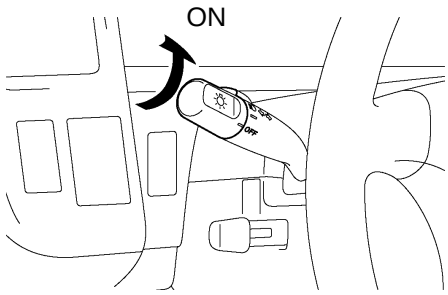

B02389

B02390

4. DIAGNOSTIC TROUBLE CODE CHART

The inspection procedure is shown in the table below. This table permits efficient and accurate troubleshooting using the diagnostic trouble codes displayed in the diagnostic trouble code check. Proceed with troubleshooting in accordance with the inspection procedure given in the diagnostic chart corresponding to the diagnostic trouble codes displayed. The engine diagnostic trouble code chart is shown below as an example.

- DTC No.
  Indicates the diagnostic trouble code.
- Page or Instructions
  Indicates the page where the inspection procedure for each circuit is to be found, or gives instructions for checking and repairs.

- Trouble Area
  Indicates the suspect area of the problem.

- Detection Item
  Indicates the system of the problem or contents of the problem.

DIAGNOSTIC TROUBLE CODE CHART

HINT:
Parameters listed in the chart may not be exactly the same as your reading due to the type of instrument or other factors.

If a malfunction code is displayed during the DTC check mode, check the circuit for the code listed in the table below. For details of each code, turn to the page referred to under the ”See page” for the respective ”DTC No.” in the DTC chart.

SAE CONTROLLED

DTC No. (See page)	Detection Item	Trouble Area	MIL*	Memory
P0100 (DI–24)	Mass Air Flow Circuit Malfunction	● Open or short in mass air flow meter circuit ● Mass air flow meter ● ECM	○	○
P0101 (DI–28)	Mass Air Flow Circuit Range/ Performance Problem	● Mass air flow meter	○	○
P0110 (DI–29)	Intake Air Temp. Circuit Malfunction	● Open or short in intake air temp. sensor circuit ● Intake air temp. sensor ● ECM	○	○
P0115 (DI–33)	Engine Coolant Temp. Circuit Malfunction	● Open or short in engine coolant temp. sensor circuit ● Engine coolant temp. sensor ● ECM	○	○
P0116 (DI–37)	Engine Coolant Temp. Circuit Range/ Performance Problem	● Engine coolant temp. sensor ● Cooling system	○	○
	/Pedal Position Sensor/Switch nction	● Open or short in throttle position sensor circuit ● Throttle position sensor ● ECM		
	osition Sensor/ Switch rformance Prob-	● Throttle position sensor		

5. PROBLEM SYMPTOMS TABLE

The suspected circuits or parts for each problem symptom are shown in the table below. Use this table to troubleshoot the problem when a ”Normal” code is displayed in the diagnostic trouble code check but the problem is still occurring. Numbers in the table indicate the inspection order in which the circuits or parts should be checked.

HINT:

When the problem is not detected by the diagnostic system even though the problem symptom is present, it is considered that the problem is occurring outside the detection range of the diagnostic system, or that the problem is occurring in a system other than the diagnostic system.

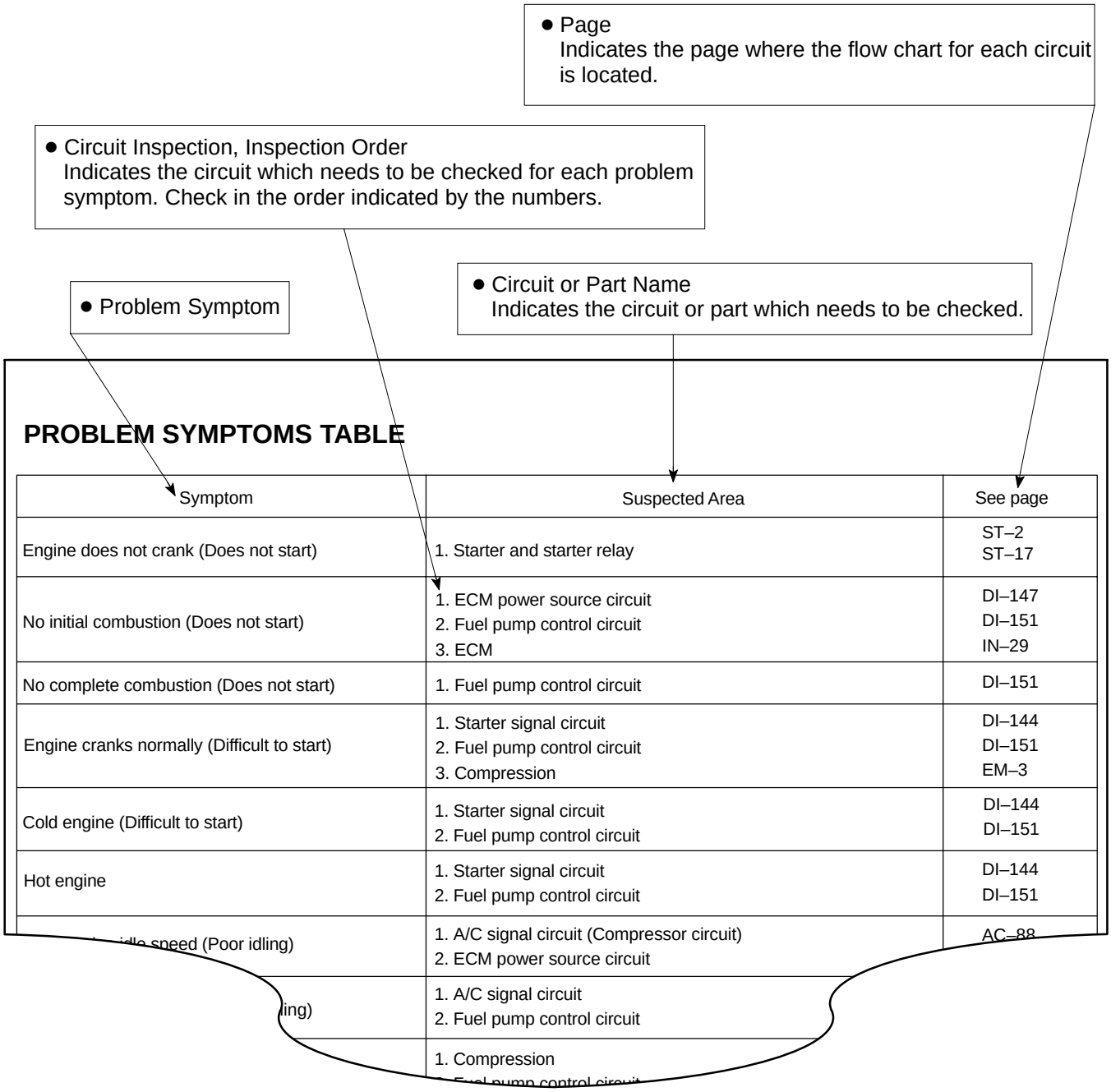

PROBLEM SYMPTOMS TABLE

Symptom	Suspected Area	See page
Engine does not crank (Does not start)	1. Starter and starter relay	ST–2 ST–17
No initial combustion (Does not start)	1. ECM power source circuit 2. Fuel pump control circuit 3. ECM	DI–147 DI–151 IN–29
No complete combustion (Does not start)	1. Fuel pump control circuit	DI–151
Engine cranks normally (Difficult to start)	1. Starter signal circuit 2. Fuel pump control circuit 3. Compression	DI–144 DI–151 EM–3
Cold engine (Difficult to start)	1. Starter signal circuit 2. Fuel pump control circuit	DI–144 DI–151
Hot engine	1. Starter signal circuit 2. Fuel pump control circuit	DI–144 DI–151
idle speed (Poor idling)	1. A/C signal circuit (Compressor circuit) 2. ECM power source circuit	AC–88
ling)	1. A/C signal circuit 2. Fuel pump control circuit	
	1. Compression 2. Fuel pump control circuit	

6. CIRCUIT INSPECTION

How to read and use each page is shown below.

● Diagnostic Trouble Code No. and Detection Item

● Circuit Description
The major role and operation, etc. of the circuit and its component parts are explained.

DTC	P0325	Knock Sensor 1 Circuit Malfunction

CIRCUIT DESCRIPTION

Knock sensor is fitted to the cylinder block to detect engine knocking. This sensor contains a piezoelectric element which generates a voltage when it becomes deformed, which occurs when the cylinder block vibrates due to knocking. If engine knocking occurs, ignition timing is retarded to suppress it.

DTC No.	DTC Detection Condition	Trouble Area
P0325	No knock sensor 1 signal to ECM with engine speed, 1,200 rpm or more.	● Open or short in knock sensor1 circuit ● Knock sensor 1 (looseness) ● ECM

If the ECM detects the above diagnosis conditions, it operates the fail safe function in which the corrective retard angle value is set to the maximum value.

● Indicates the diagnostic trouble code, diagnostic trouble code set parameter and suspect area of the problem.

WIRING DIAGRAM

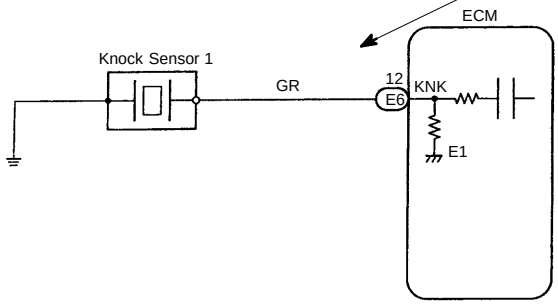

● Wiring Diagram
This shows a wiring diagram of the circuit.
Use this diagram together with ELECTRICAL WIRING DIAGRAM to thoroughly understand the circuit.
Wire colors are indicated by an alphabetical code.
B = Black, L = Blue, R = Red, BR = Brown,
LG = Light Green, V = Violet, G = Green,
O = Orange, W = White, GR = Gray, P = Pink,
Y = Yellow, SB = Sky Blue
The first letter indicates the basic wire color and the second letter indicates the color of the stripe.

V08423

● Indicates the position of the ignition switch during the check.

LOCK
Ignition Switch LOCK (OFF)

ON
Ignition Switch ON

START
Ignition Switch START

ACC
Ignition Switch ACC

● Inspection Procedure
Use the inspection procedure to determine if the circuit is normal or abnormal, and, if it is abnormal, use it to determine whether the problem is located in the sensors, actuators, wire harness or ECU.

INSPECTION PROCEDURE

1	**Check continuity between terminal KNK of ECM connector and body ground.**

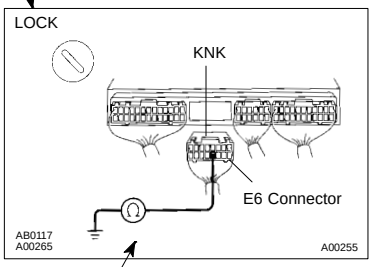

PREPARATION:
(a) Remove the glove compartment (See page SF–68).
(b) Disconnect the E6 connector from the ECM.

CHECK:
Measure the resistance between terminal KNK of the ECM connector and body ground.

OK:
Resistance: 1 MΩ or higher

OK	**Go to step 3.**

NG

2	**Check knock sensor (See page SF–61).**

OK	**Replace knock sensor.**

● Indicates the place to check the voltage or resistance.
● Indicates the connector position to checked, from the front or back side.

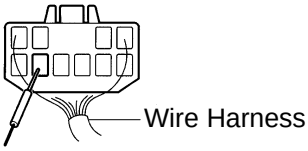

Check from the connector back side. (with harness)

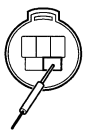

Check from the connector front side. (without harness)
In this case, care must be taken not to bend the terminals.

● Indicates the condition of the connector of ECU during the check.

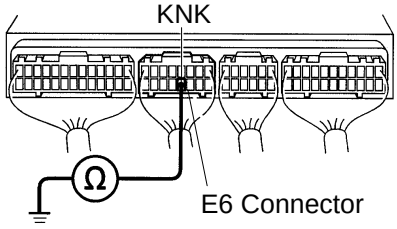

Connector being checked is connected.

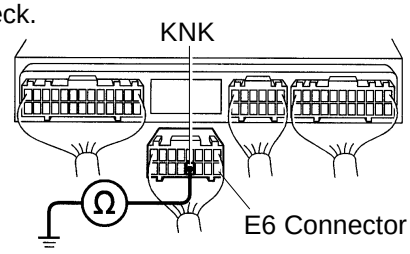

Connector being checked is disconnected.

V08425

IN05X–13

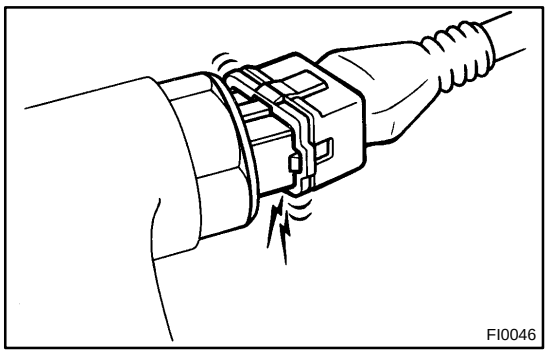
FI0046

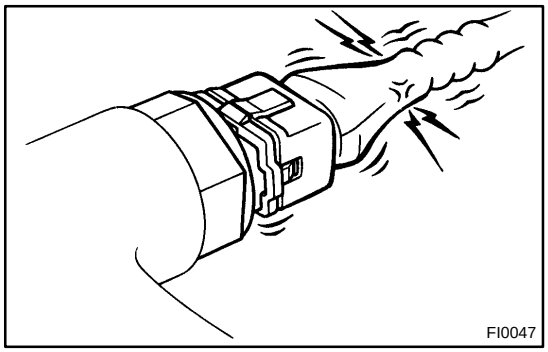
FI0047

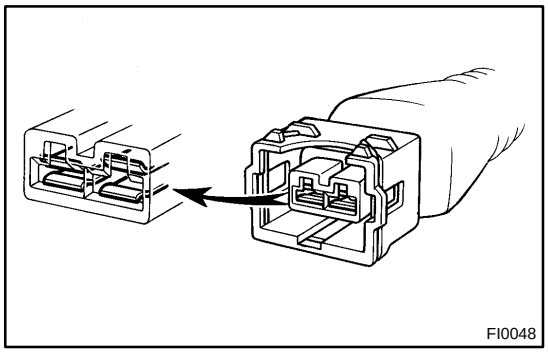
FI0048

HOW TO USE THE DIAGNOSTIC CHART AND INSPECTION PROCEDURE

1. CONNECTOR CONNECTION AND TERMINAL INSPECTION

- For troubleshooting, diagnostic trouble code charts or problem symptom table are provided for each circuit with detailed inspection procedures on the following pages.
- When all the component parts, wire harnesses and connectors of each circuit except the ECU are found to be normal in troubleshooting, then it is determined that the problem is in the ECU. Accordingly, if diagnosis is performed without the problem symptoms occurring, refer to Step 8 to replace the ECU. So always confirm that the problem symptoms are occurring, or proceed with inspection while using the symptom simulation method.
- The instructions ”Check wire harness and connector” and ”Check and replace ECU” which appear in the inspection procedure, are common and applicable to all diagnostic trouble codes. Follow the procedure outlined below whenever these instructions appear.

OPEN CIRCUIT:

This could be due to a disconnected wire harness, faulty contact in the connector, a connector terminal pulled out, etc.

HINT:

- It is rarely the case that a wire is broken in the middle of it. Most cases occur at the connector. In particular, carefully check the connectors of sensors and actuators
- Faulty contact could be due to rusting of the connector terminals, to foreign materials entering terminals or a deformation of connector terminals. Simply disconnecting and reconnecting the connectors once changes the condition of the connection and may result in a return to normal operation. Therefore, in troubleshooting, if no abnormality is found in the wire harness and connector check, but the problem disappears after the check, then the cause is considered to be in the wire harness or connectors.

SHORT CIRCUIT:

This could be due to a contact between wire harness and the body ground or to a short circuit occurred inside the switch, etc.

HINT:

When there is a short circuit between the wire harness and body ground, check thoroughly whether the wire harness is caught in the body or is clamped properly.

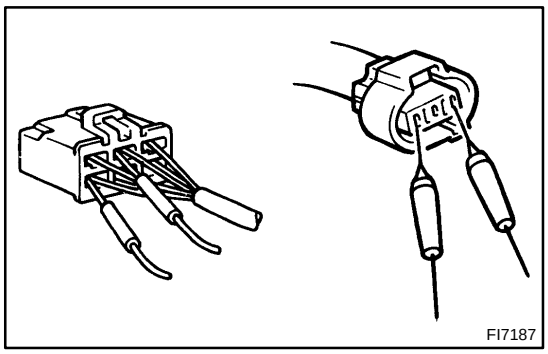

2. CONNECTOR HANDLING

When inserting tester probes into a connector, insert them from the rear of the connector. When necessary, use mini test leads. For water resistant connectors which cannot be accessed from behind, take good care not to deform the connector terminals.

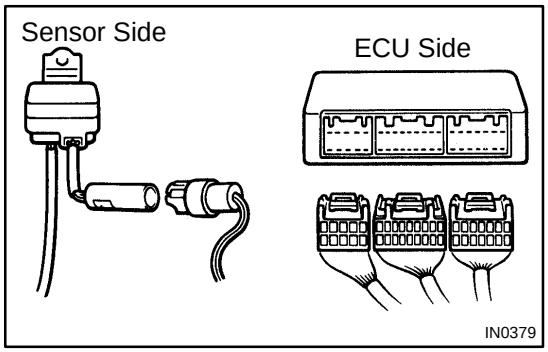

3. CONTINUITY CHECK (OPEN CIRCUIT CHECK)

(a) Disconnect the connectors at both ECU and sensor sides.

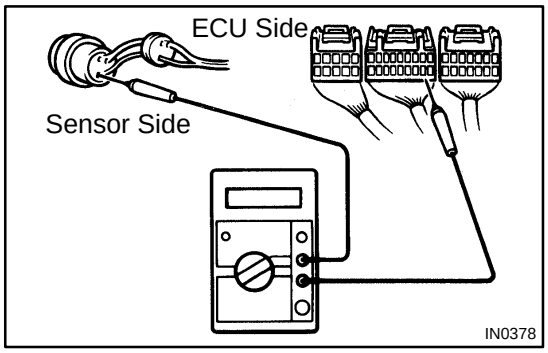

(b) Measure the resistance between the applicable terminals of the connectors.

Resistance: 1 Ω or less

HINT:

Measure the resistance while lightly shaking the wire harness vertically and horizontally.

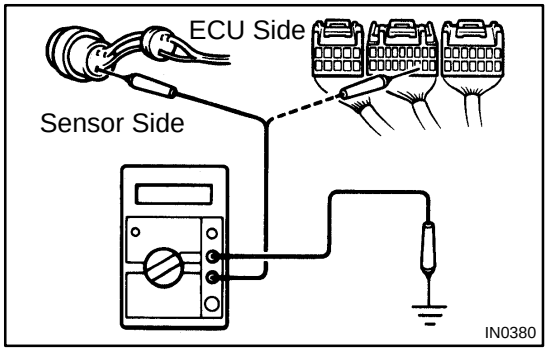

4. RESISTANCE CHECK (SHORT CIRCUIT CHECK)

(a) Disconnect the connectors on both ends.

(b) Measure the resistance between the applicable terminals of the connectors and body ground. Be sure to carry out this check on the connectors on both ends.

Resistance: 1 MΩ or higher

HINT:

Measure the resistance while lightly shaking the wire harness vertically and horizontally.

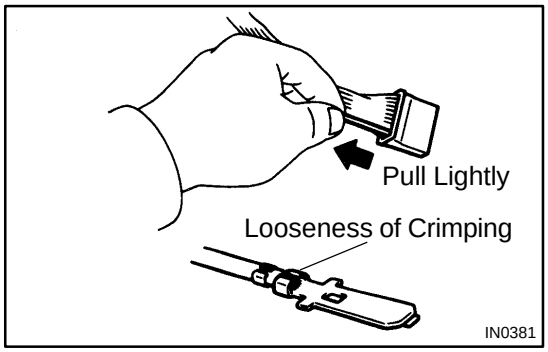

5. VISUAL CHECK AND CONTACT PRESSURE CHECK

(a) Disconnect the connectors at both ends.

(b) Check for rust or foreign material, etc. in the terminals of the connectors.

(c) Check crimped portions for looseness or damage and check that the terminals are secured in lock portion.

HINT:

The terminals should not come out when pulled lightly from the back.

(d) Prepare a test male terminal and insert it in the female terminal, then pull it out.

NOTICE:

When testing a gold–plated female terminal, always use a gold–plated male terminal.

HINT:

When the test terminal is pulled out more easily than others, there may be poor contact in that section.

Fig. 1

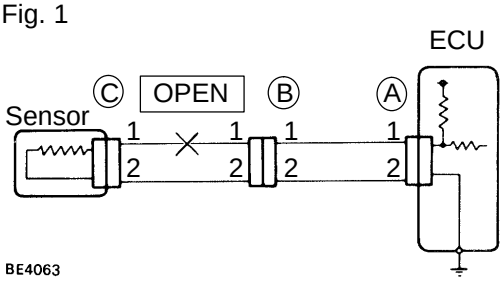

6. CHECK OPEN CIRCUIT

For the open circuit in the wire harness in Fig. 1, perform "(a) Continuity Check" or "(b) Voltage Check" to locate the section.

Fig. 2

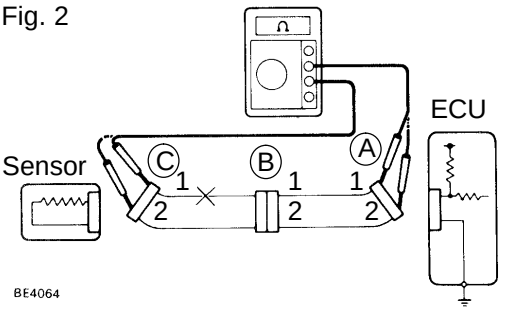

(a) Check the continuity.

(1) Disconnect connectors "A" and "C" and measure the resistance between them.

In the case of Fig. 2:

Between terminal 1 of connector "A" and terminal 1 of connector "C" → No continuity (open)

Between terminal 2 of connector "A" and terminal 2 of connector "C" → Continuity

Therefore, it is found out that there is an open circuit between terminal 1 of connector "A" and terminal 1 of connector "C".

Fig. 3

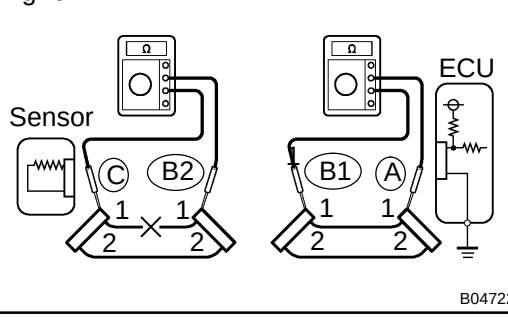

(2) Disconnect connector "B" and measure the resistance between the connectors.

In the case of Fig. 3:

Between terminal 1 of connector "A" and terminal 1 of connector "B1" → Continuity

Between terminal 1 of connector "B2" and terminal 1 of connector "C" → No continuity (open)

Therefore, it is found out that there is an open circuit between terminal 1 of connector "B2" and terminal 1 of connector "C".

Fig. 4

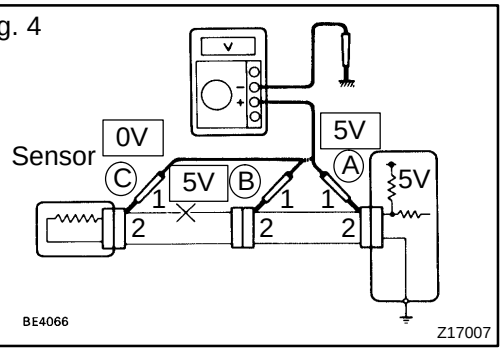

(b) Check the voltage.

In a circuit in which voltage is applied (to the ECU connector terminal), an open circuit can be checked for by conducting a voltage check.

As shown in Fig. 4, with each connector still connected, measure the voltage between body ground and terminal 1 of connector ”A” at the ECU 5V output terminal, terminal 1 of connector ”B”, and terminal 1 of connector ”C”, in that order.

If the results are:

5V: Between Terminal 1 of connector ”A” and Body Ground
5V: Between Terminal 1 of connector ”B” and Body Ground
0V: Between Terminal 1 of connector ”C” and Body Ground

Then it is found out that there is an open circuit in the wire harness between terminal 1 of ”B” and terminal 1 of ”C”.

Fig. 5

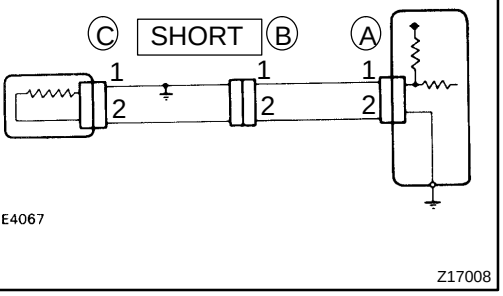

7. CHECK SHORT CIRCUIT

If the wire harness is ground shorted as in Fig. 5, locate the section by conducting a ”continuity check with ground”.

Fig. 6

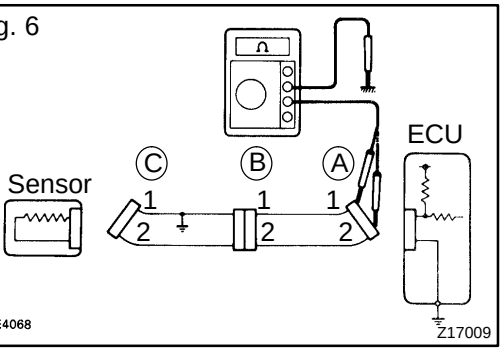

Check the continuity with ground.

(1) Disconnect connectors ”A” and ”C” and measure the resistance between terminal 1 and 2 of connector ”A” and body ground.

In the case of Fig. 6:

Between terminal 1 of connector ”A” and body ground → Continuity (short)

Between terminal 2 of connector ”A” and body ground → No continuity

Therefore, it is found out that there is a short circuit between terminal 1 of connector ”A” and terminal 1 of connector ”C”.

Fig. 7

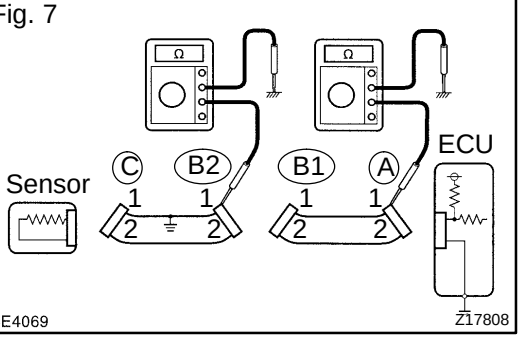

(2) Disconnect connector ”B” and measure the resistance between terminal 1 of connector ”A” and body ground, and terminal 1 of connector ”B2” and body ground.
In the case of Fig. 7:
Between terminal 1 of connector ”A” and body ground → No continuity
Between terminal 1 of connector ”B2” and body ground → Continuity (short)
Therefore, it is found out that there is a short circuit between terminal 1 of connector ”B2” and terminal 1 of connector ”C”.

8. CHECK AND REPLACE ECU

First check the ECU ground circuit. If it is faulty, repair it. If it is normal, the ECU could be faulty, so replace the ECU with a normal functioning one and check that the symptoms appear.

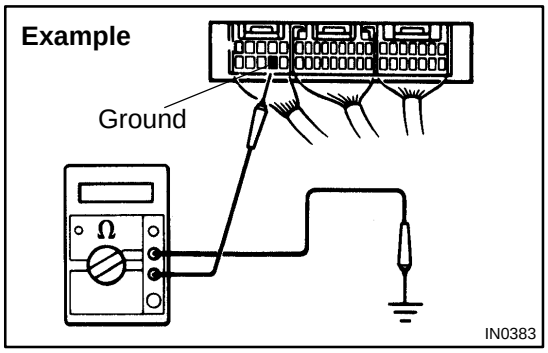

(1) Measure the resistance between the ECU ground terminal and the body ground.

Resistance: 1 Ω or less

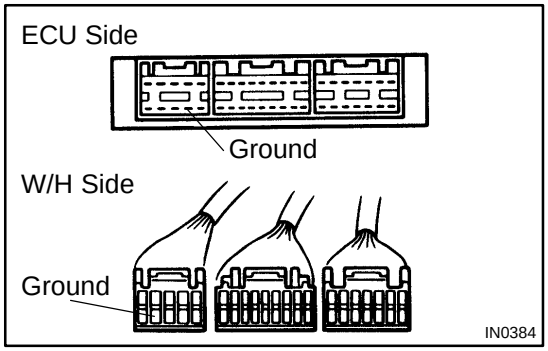

(2) Disconnect the ECU connector, check the ground terminals on the ECU side and the wire harness side for bend and check the contact pressure.

FOREWORD

This manual (Volume 1) contains maintenance, preparation, specifications and diagnostics procedures for the 2003 TOYOTA TACOMA.

Applicable models: RZN140, 150, 161, 171, 191, 196 series
VZN150, 170, 195 series

For repair procedures for the engine, chassis and body, and electrical service procedures, refer to VOLUME 2 (Pub. No. RM1002U2).

The manual is divided into 6 sections with a thumb index for each section at the edge of the pages.

Please note that the publications below have also been prepared as relevant service manuals for the components and systems in this vehicles.

Manual Name	Pub. No.
• A43D Automatic Transmission Repair Manual (Nov. 1993)	RM387U
• A340E, A340F, A340H Automatic Transmission Repair Manual (Nov. 1993)	RM391U
• A340F, A343F Automatic Transmission Repair Manual (Sep. 1995)	RM479U
• 2003 TOYOTA TACOMA Electrical Wiring Diagram	EWD517U
• 2003 Model TOYOTA New Car Features	NCF228U

All information in this manual is based on the latest product information at the time of publication. However, specifications and procedures are subject to change without notice.

TOYOTA MOTOR CORPORATION

© 2002 **TOYOTA MOTOR CORPORATION**
All rights reserved. This book may not be reproduced or copied, in whole or in part, without the written permission of Toyota Motor Corporation.
First Printing: Aug. 21, 2002 01–020821–00

CAUTION

This manual does not include all the necessary items about repair and service. This manual is made for the purpose of the use for the persons who have special techniques and certifications. In the cases that non–specialized or uncertified technicians perform repair or service only using this manual or without proper equipment or tool, that may cause severe injury to you or other people around and also cause damage to your customer’s vehicle.

In order to prevent dangerous operation and damages to your customer’s vehicle, be sure to follow the instruction shown below.

- Must read this manual thoroughly. It is especially important to have a good understanding of all the contents written in the PRECAUTION of ”IN” section.
- The service method written in this manual is very effective to perform repair and service. When performing the operations following the procedures using this manual, be sure to use tools specified and recommended. If using non–specified or recommended tools and service method, be sure to confirm safety of the technicians and any possibility of causing personal injury or damage to the customer’s vehicle before starting the operation.
- If part replacement is necessary, must replace the part with the same part number or equivalent part. Do not replace it with inferior quality.
- It is important to note that this manual contains various ”Cautions” and ”Notices” that must be carefully observed in order to reduce the risk of personal injury during service or repair, or the possibility that improper service or repair may damage the vehicle or render it unsafe. It is also important to understand that these ”Cautions” and ”Notices” are not exhaustive, because it is important to warn of all the possible hazardous consequences that might result from failure to follow these instructions.

HOW TO USE THIS MANUAL

IN00U–36

GENERAL INFORMATION

1. INDEX

An INDEX is provided on the first page of each section to guide you to the item to be repaired. To assist you in finding your way through the manual, the section title and major heading are given at the top of every page.

2. PRECAUTION

At the beginning of each section, a PRECAUTION is given that pertains to all repair operations contained in that section.

Read these precautions before starting any repair task.

3. TROUBLESHOOTING

TROUBLESHOOTING tables are included for each system to help you diagnose the problem and find the cause. The fundamentals of how to proceed with troubleshooting are described on page IN–18.

Be sure to read this before performing troubleshooting.

4. PREPARATION

Preparation lists the SST (Special Service Tools), recommended tools, equipment, lubricant and SSM (Special Service Materials) which should be prepared before beginning the operation and explains the purpose of each one.

5. REPAIR PROCEDURES

Most repair operations begin with an overview illustration. It identifies the components and shows how the parts fit together.

Example:

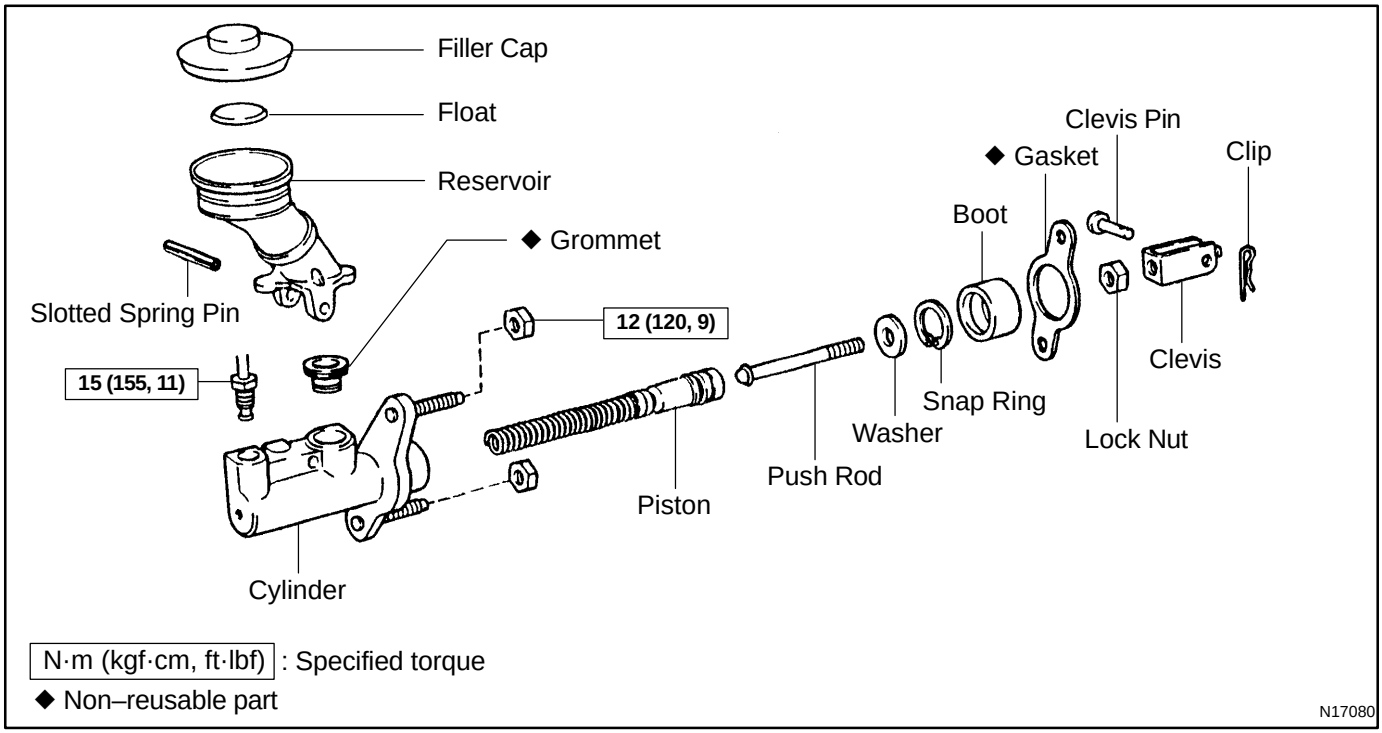

The procedures are presented in a step–by–step format:

- The illustration shows what to do and where to do it.
- The task heading tells what to do.
- The detailed text tells how to perform the task and gives other information such as specifications and warnings.

Example:

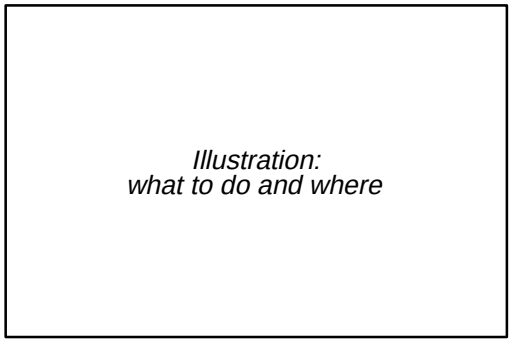

Task heading : what to do

21. CHECK PISTON STROKE OF OVERDRIVE BRAKE

(a) Place SST and a dial indicator onto the overdrive brake piston as shown in the illustration.

SST 09350–30020 (09350–06120)

Set part No. *Component part No.*

Detailed text : how to do task

(b) Measure the stroke applying and releasing the compressed air (392 — 785 kPa, 4 — 8 kgf/cm^2 or 57 — 114 psi) as shown in the illustration.

Piston stroke: 1.40 — 1.70 mm (0.0551 — 0.0669 in.)

Specification

This format provides the experienced technician with a FAST TRACK to the information needed. The upper case task heading can be read at a glance when necessary, and the text below it provides detailed information. Important specifications and warnings always stand out in bold type.

6. REFERENCES

References have been kept to a minimum. However, when they are required you are given the page to refer to.

7. SPECIFICATIONS

Specifications are presented in bold type throughout the text where needed. You never have to leave the procedure to look up your specifications. They are also found in Service Specifications section for quick reference.

8. CAUTIONS, NOTICES, HINTS:

- CAUTIONS are presented in bold type, and indicate there is a possibility of injury to you or other people.
- NOTICES are also presented in bold type, and indicate the possibility of damage to the components being repaired.
- HINTS are separated from the text but do not appear in bold. They provide additional information to help you perform the repair efficiently.

9. SI UNIT

The UNITS given in this manual are primarily expressed according to the SI UNIT (International System of Unit), and alternately expressed in the metric system and in the English System.

Example:

Torque: 30 N·m (310 kgf·cm, 22 ft·lbf)

IDENTIFICATION INFORMATION

IN01P–06

VEHICLE IDENTIFICATION AND ENGINE SERIAL NUMBER

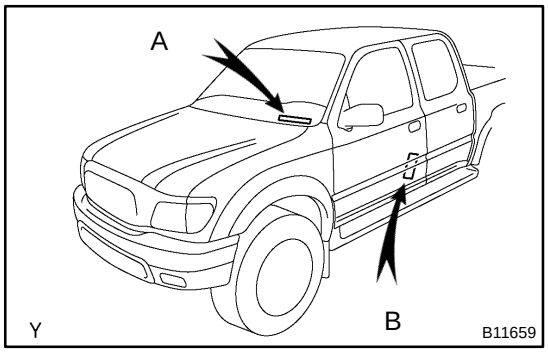

1. VEHICLE IDENTIFICATION NUMBER

The vehicle identification number is stamped on the vehicle identification number plate and certification label.

A: Vehicle Identification Number Plate

B: Certification Label

2RZ–FE, 3RZ–FE Engine

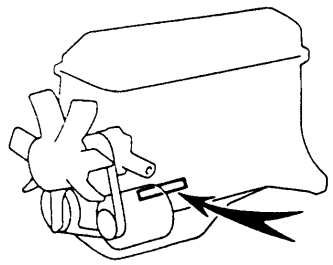

5VZ–FE Engine

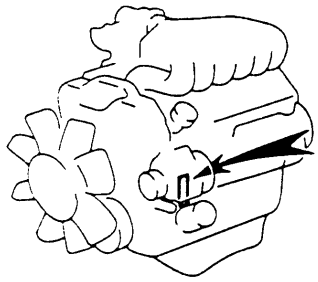

2. ENGINE SERIAL NUMBER

The engine serial number is stamped on the engine block, as shown in the illustration.

REPAIR INSTRUCTIONS

IN0CO–12

GENERAL INFORMATION

BASIC REPAIR HINT

(a) Use fender, seat and floor covers to keep the vehicle clean and prevent damage.

(b) During disassembly, keep parts in the appropriate order to facilitate reassembly.

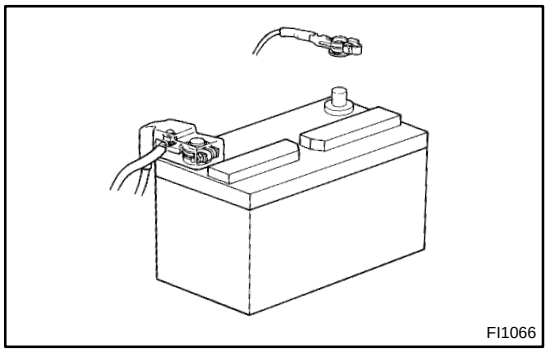
FI1066

(c) Installation and removal of battery terminal:
  (1) Before performing electrical work, disconnect the negative (–) terminal cable from the battery.
  (2) If it is necessary to disconnect the battery for inspection or repair, first disconnect the negative (–) terminal cable.
  (3) When disconnecting the terminal cable, to prevent damage to battery terminal, loosen the cable nut and raise the cable straight up without twisting or prying it.
  (4) Clean the battery terminals and cable ends with a clean shop rag. Do not scrape them with a file or other abrasive objects.
  (5) Install the cable ends to the battery terminals after loosening the nut, and tighten the nut after installation. Do not use a hammer to tap the cable ends onto the terminals.
  (6) Be sure the cover for the positive (+) terminal is properly in place.

(d) Check hose and wiring connectors to make sure that they are connected securely and correctly.

(e) Non–reusable parts
  (1) Always replace cotter pins, gaskets, O–rings, oil seals, etc. with new ones.
  (2) Non–reusable parts are indicated in the component illustrations by the "◆" symbol.

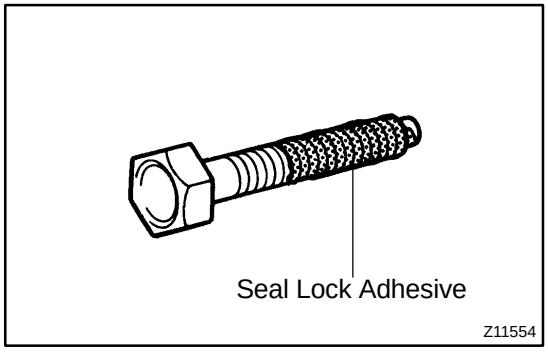

Z11554

(f) Precoated parts
Precoated parts are bolts, nuts, etc. that are coated with a seal lock adhesive at the factory.
  (1) If a precoated part is retightened, loosened or caused to move in any way, it must be recoated with the specified adhesive.
  (2) When reusing precoated parts, clean off the old adhesive and dry with compressed air. Then apply the specified seal lock adhesive to the bolt, nut or threads.

(3) Precoated parts are indicated in the component illustrations by the "★" symbol.

(g) When necessary, use a sealer on gaskets to prevent leaks.

(h) Carefully observe all specifications for bolt tightening torques. Always use a torque wrench.

(i) Use of special service tools (SST) and special service materials (SSM) may be required, depending on the nature of the repair. Be sure to use SST and SSM where specified and follow the proper work procedure. A list of SST and SSM can be found in Preparation section in this manual.

Medium Current Fuse and High Current Fuse Equal Amperage Rating

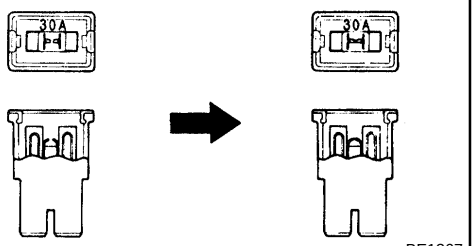

BE1367

(j) When replacing fuses, be sure the new fuse has the correct amperage rating. DO NOT exceed the rating or use one with a lower rating.

Illustration	Symbol	Part Name	Abbreviation
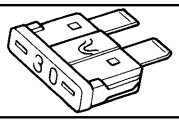 BE5594	 IN0365	FUSE	FUSE
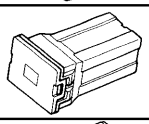 BE5595	 IN0366	MEDIUM CURRENT FUSE	M–FUSE
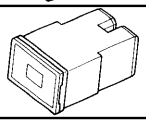 BE5596	 IN0367	HIGH CURRENT FUSE	H–FUSE
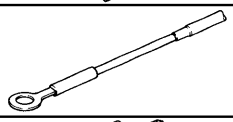 BE5597	 IN0367	FUSIBLE LINK	FL
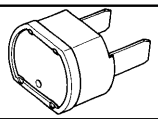 BE5598	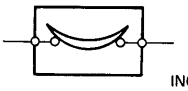 IN0368	CIRCUIT BREAKER	CB

V00076

(k) Care must be taken when jacking up and supporting the vehicle. Be sure to lift and support the vehicle at the proper locations (See page IN–8).
- Cancel the parking brake on the level place and shift the transmission in Neutral (or N position).
- When jacking up the front wheels of the vehicle at first place stoppers behind the rear wheels.
- When jacking up the rear wheels of the vehicle at first place stoppers before the front wheels.
- When either the front or rear wheels only should be jacked up, set rigid racks and place stoppers in front and behind the other wheels on the ground.
- After the vehicle is jacked up, be sure to support it on rigid racks . It is extremely dangerous to do any work on a vehicle raised on a jack alone, even for a small job that can be finished quickly.

(l) Observe the following precautions to avoid damage to the following parts:

(1) Do not open the cover or case of the ECU unless absolutely necessary. (If the IC terminals are touched, the IC may be destroyed by static electricity.)

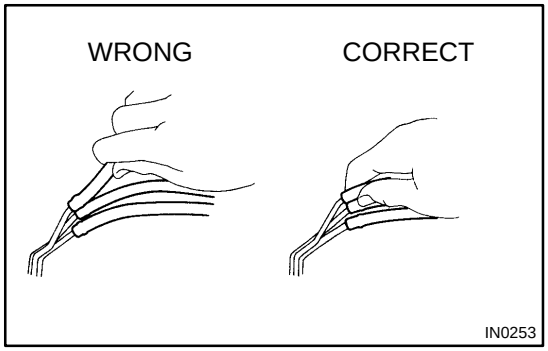

(2) To disconnect vacuum hoses, pull off the end, not the middle of the hose.

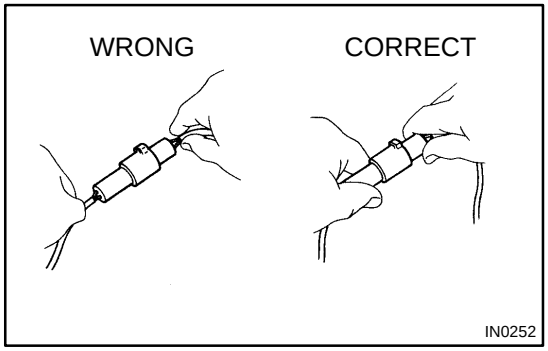

(3) To pull apart electrical connectors, pull on the connector itself, not the wires.

(4) Be careful not to drop electrical components, such as sensors or relays. If they are dropped on a hard floor, they should be replaced and not reused.

(5) When steam cleaning an engine, protect the electronic components, air filter and emission–related components from water.

(6) Never use an impact wrench to remove or install temperature switches or temperature sensors.

(7) When checking continuity at the wire connector, insert the tester probe carefully to prevent terminals from bending.

(8) When using a vacuum gauge, never force the hose onto a connector that is too large. Use a step–down adapter for adjustment. Once the hose has been stretched, it may leak air.

Example

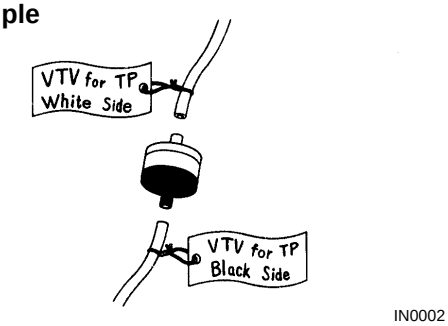

(m) Installation and removal of vacuum hose:

(1) When disconnecting vacuum hoses, use tags to identify how they should be reconnected to.

(2) After completing a job, double check that the vacuum hoses are properly connected. A label under the hood shows the proper layout.

(n) Unless otherwise stated, all resistance is measured at an ambient temperature of 20˚C (68˚F). Because the resistance may be outside specifications if measured at high temperatures immediately after the vehicle has been running, measurement should be made when the engine has cooled down.

IN0DA–01

VEHICLE LIFT AND SUPPORT LOCATIONS

2WD Except PRE RUNNER

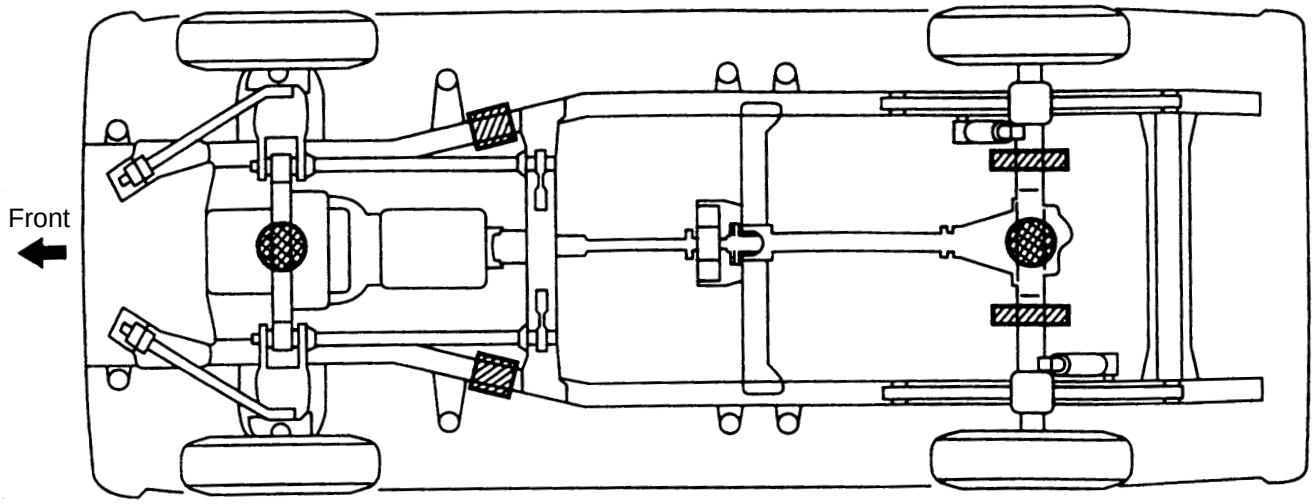

4WD

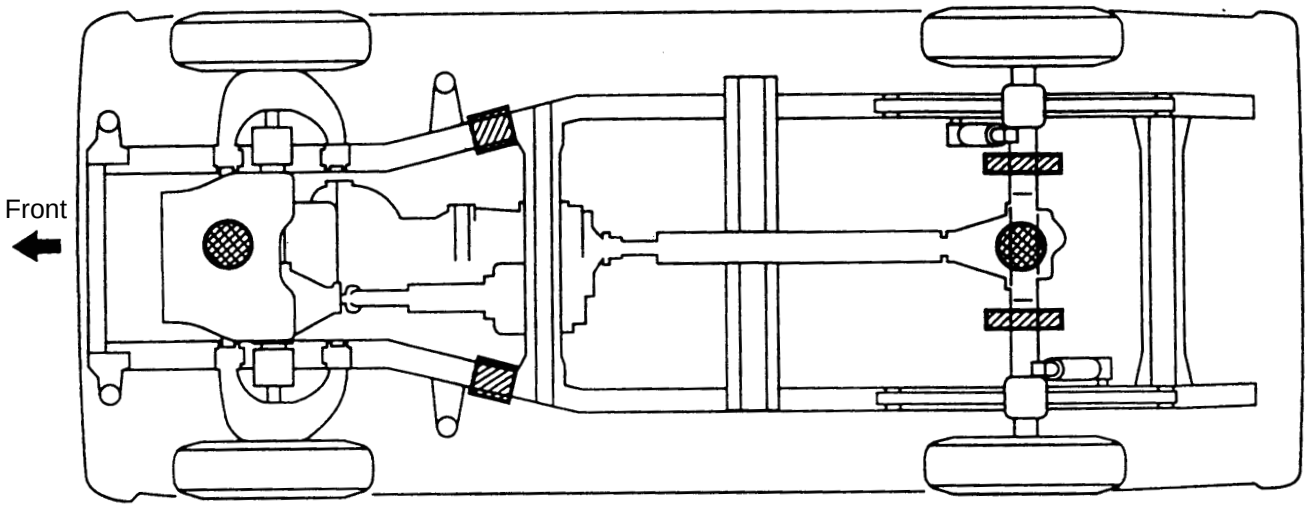

JACK POSITION •

Front • • • • • • • • • • Center of crossmember

Rear • • • • • • • • • • Under the rear differential

SUPPORT POSITION

Safety stand •

B00699

PRE RUNNER

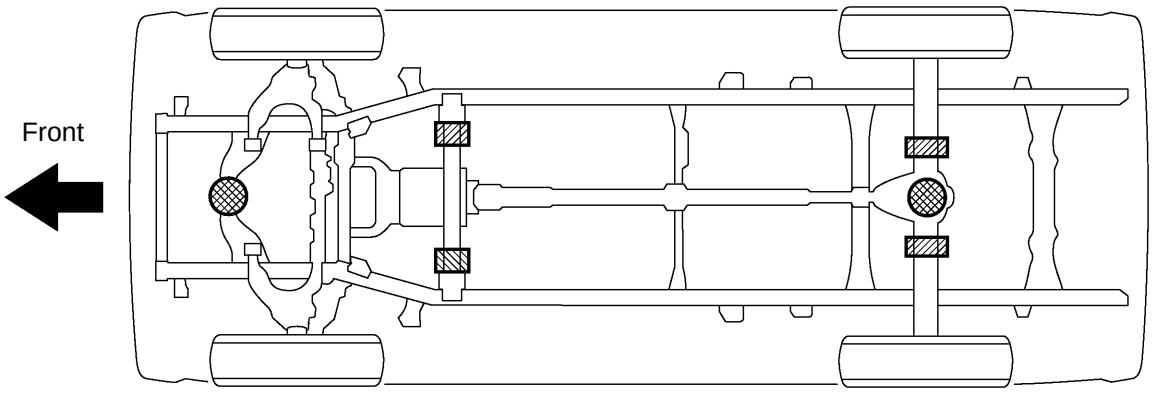

JACK POSITION .....

Front ..... Center of crossmember

Rear ..... Under the rear differential

SUPPORT POSITION

Safety stand .....

B04189

TERMS

ABBREVIATIONS USED IN THIS MANUAL

IN04Q–07

Abbreviations	Meaning
ABS	Anti–Lock Brake System
AC	Alternating Current
ACC	Accessory
ACIS	Acoustic Control Induction System
ACSD	Automatic Cold Start Device
A.D.D.	Automatic Disconnecting Differential
A/F	Air–Fuel Ratio
AHC	Active Height Control Suspension
ALR	Automatic Locking Retractor
ALT	Alternator
AMP	Amplifier
ANT	Antenna
APPROX.	Approximately
A/T	Automatic Transmission (Transaxle)
ATF	Automatic Transmission Fluid
AUTO	Automatic
AUX	Auxiliary
AVG	Average
AVS	Adaptive Variable Suspension
BA	Brake Assist
BACS	Boost Altitude Compensation System
BAT	Battery
BDC	Bottom Dead Center
B/L	Bi–Level
B/S	Bore–Stroke Ratio
BTDC	Before Top Dead Center
BVSV	Bimetallic Vacuum Switching Valve
Calif.	California
CB	Circuit Breaker
CCo	Catalytic Converter For Oxidation
CD	Compact Disc
CF	Cornering Force
CG	Center Of Gravity
CH	Channel
COMB.	Combination
CPE	Coupe
CPS	Combustion Pressure Sensor
CPU	Central Processing Unit
CRS	Child Restraint System
CTR	Center
C/V	Check Valve
CV	Control Valve

CW	Curb Weight
DC	Direct Current
DEF	Defogger
DFL	Deflector
DIFF.	Differential
DIFF. LOCK	Differential Lock
D/INJ	Direct Injection
DLI	Distributorless Ignition
DOHC	Double Over Head Cam
DP	Dash Pot
DS	Dead Soak
DSP	Digital Signal Processor
EBD	Electronic Brake Force Distribution
ECAM	Engine Control And Measurement System
ECD	Electronic Controlled Diesel
ECDY	Eddy Current Dynamometer
ECU	Electronic Control Unit
ED	Electro–Deposited Coating
EDIC	Electric Diesel Injection Control
EDU	Electronic Driving Unit
EFI	Electronic Fuel Injection
E/G	Engine
EGR–VM	Exhaust Gas Recirculation–Vacuum Modulator
ELR	Emergency Locking Retractor
ENG	Engine
ESA	Electronic Spark Advance
ETCS	Electronic Throttle Control System
EVP	Evaporator
E–VRV	Electric Vacuum Regulating Valve
EXH	Exhaust
FE	Fuel Economy
FF	Front–Engine Front–Wheel–Drive
F/G	Fuel Gage
FIPG	Formed In Place Gasket
FL	Fusible Link
F/P	Fuel Pump
FPU	Fuel Pressure Up
Fr	Front
FR	Front–Engine Rear–Wheel–Drive
F/W	Flywheel
FW/D	Flywheel Damper
FWD	Front–Wheel–Drive
GAS	Gasoline
GSA	Gear Shift Actuator
GND	Ground
HAC	High Altitude Compensator

H/B	Hatchback
H–FUSE	High Current Fuse
HI	High
HID	High Intensity Discharge (Head Lamp)
HPU	Hydraulic Power Unit
HSG	Housing
HT	Hard Top
HWS	Heated Windshield System
IAC	Idle Air Control
IC	Integrated circuit
IDI	Indirect Diesel Injection
IFS	Independent Front Suspension
IG	Ignition
IIA	Integrated Ignition Assembly
IN	Intake (Manifold, Valve)
INT	Intermittent
I/P	Instrument Panel
IRS	Independent Rear Suspension
J/B	Junction Block
J/C	Junction Connector
KD	Kick–Down
LAN	Local Area Network
LB	Liftback
LCD	Liquid Crystal Display
LED	Light Emitting Diode
LH	Left–Hand
LHD	Left–Hand Drive
L/H/W	Length, Height, Width
LLC	Long–Life Coolant
LNG	Liquified Natural Gas
LO	Low
LPG	Liquified Petroleum Gas
LSD	Limited Slip Differential
LSP & PV	Load Sensing Proportioning And Bypass Valve
LSPV	Load Sensing Proportioning Valve
MAX.	Maximum
M–FUSE	Medium Current Fuse
MIC	Microphone
MIL	Malfunction Indicator Lamp
MIN.	Minimum
MP	Multipurpose
MPX	Multiplex Communication System
M/T	Manual Transmission (Transaxle)
MT	Mount
MTG	Mounting
N	Neutral

NA	Natural Aspiration
No.	Number
O/D	Overdrive
OEM	Original Equipment Manufacturing
OHC	Overhead Camshaft
OHV	Overhead Valve
OPT	Option
O/S	Oversize
P & BV	Proportioning And Bypass Valve
PCS	Power Control System
PCV	Positive Crankcase Ventilation
PKB	Parking Brake
PPS	Progressive Power Steering
PS	Power Steering
PTO	Power Take–Off
R & P	Rack And Pinion
R/B	Relay Block
RBS	Recirculating Ball Type Steering
R/F	Reinforcement
RFS	Rigid Front Suspension
RH	Right–Hand
RHD	Right–Hand Drive
RLY	Relay
ROM	Read Only Memory
Rr	Rear
RR	Rear–Engine Rear–Wheel Drive
RRS	Rigid Rear Suspension
RWD	Rear–Wheel Drive
SDN	Sedan
SEN	Sensor
SICS	Starting Injection Control System
SMT	Sequential Manual Transmission
SOC	State Of Charge
SOHC	Single Overhead Camshaft
SPEC	Specification
SPI	Single Point Injection
SRS	Supplemental Restraint System
SSM	Special Service Materials
SST	Special Service Tools
STD	Standard
STJ	Cold–Start Fuel Injection
SW	Switch
SYS	System
T/A	Transaxle
TACH	Tachometer
TBI	Throttle Body Electronic Fuel Injection

TC	Turbocharger
TCCS	TOYOTA Computer–Controlled System
TCV	Timing Control Valve
TDC	Top Dead Center
TEMP.	Temperature
TEMS	TOYOTA Electronic Modulated Suspension
TIS	Total Information System For Vehicle Development
T/M	Transmission
TMC	TOYOTA Motor Corporation
TMMK	TOYOTA Motor Manufacturing Kentucky, Inc.
TRAC	Traction Control System
TURBO	Turbocharge
U/D	Underdrive
U/S	Undersize
VCV	Vacuum Control Valve
VENT	Ventilator
VIN	Vehicle Identification Number
VPS	Variable Power Steering
VSC	Vehicle Skid Control
VSV	Vacuum Switching Valve
VTV	Vacuum Transmitting Valve
w/	With
WGN	Wagon
W/H	Wire Harness
w/o	Without
1st	First
2nd	Second
2WD	Two Wheel Drive Vehicle (4x2)
4WD	Four Wheel Drive Vehicle (4x4)

IN0CI–02

GLOSSARY OF SAE AND TOYOTA TERMS

This glossary lists all SAE–J1930 terms and abbreviations used in this manual in compliance with SAE recommendations, as well as their TOYOTA equivalents.

SAE ABBREVIATIONS	SAE TERMS	TOYOTA TERMS ( )—ABBREVIATIONS
A/C	Air Conditioning	Air Conditioner
ACL	Air Cleaner	Air Cleaner, A/CL
AIR	Secondary Air Injection	Air Injection (AI)
AP	Accelerator Pedal	–
B+	Battery Positive Voltage	+B, Battery Voltage
BARO	Barometric Pressure	HAC
CAC	Charge Air Cooler	Intercooler
CARB	Carburetor	Carburetor
CFI	Continuous Fuel Injection	–
CKP	Crankshaft Position	Crank Angle
CL	Closed Loop	Closed Loop
CMP	Camshaft Position	Cam Angle
CPP	Clutch Pedal Position	–
CTOX	Continuous Trap Oxidizer	–
CTP	Closed Throttle Position	LL ON, Idle ON
DFI	Direct Fuel Injection (Diesel)	Direct Injection (DI)
DI	Distributor Ignition	–
DLC1 DLC2 DLC3	Data Link Connector 1 Data Link Connector 2 Data Link Connector 3	1: Check Connector 2: Total Diagnosis Comunication Link (TDCL) 3: OBD II Diagnostic Connector
DTC	Diagnostic Trouble Code	Diagnostic Code
DTM	Diagnostic Test Mode	–
ECL	Engine Control Level	–
ECM	Engine Control Module	Engine ECU (Electronic Control Unit)
ECT	Engine Coolant Temperature	Coolant Temperature, Water Temperature (THW)
EEPROM	Electrically Erasable Programmable Read Only Memory	Electrically Erasable Programmable Read Only Memory (EEPROM), Erasable Programmable Read Only Memory (EPROM)
EFE	Early Fuel Evaporation	Cold Mixture Heater (CMH), Heat Control Valve (HCV)
EGR	Exhaust Gas Recirculation	Exhaust Gas Recirculation (EGR)
EI	Electronic Ignition	TOYOTA Distributor–less Ignition (TDI)
EM	Engine Modification	Engine Modification (EM)
EPROM	Erasable Programmable Read Only Memory	Programmable Read Only Memory (PROM)
EVAP	Evaporative Emission	Evaporative Emission Control (EVAP)
FC	Fan Control	–
FEEPROM	Flash Electrically Erasable Programmable Read Only Memory	–
FEPROM	Flash Erasable Programmable Read Only Memory	–
FF	Flexible Fuel	–
FP	Fuel Pump	Fuel Pump
GEN	Generator	Alternator
GND	Ground	Ground (GND)

HO2S	Heated Oxygen Sensor	Heated Oxygen Sensor (HO_2S)
IAC	Idle Air Control	Idle Speed Control (ISC)
IAT	Intake Air Temperature	Intake or Inlet Air Temperature
ICM	Ignition Control Module	–
IFI	Indirect Fuel Injection	Indirect Injection (IDL)
IFS	Inertia Fuel–Shutoff	–
ISC	Idle Speed Control	–
KS	Knock Sensor	Knock Sensor
MAF	Mass Air Flow	Air Flow Meter
MAP	Manifold Absolute Pressure	Manifold Pressure Intake Vacuum
MC	Mixture Control	Electric Bleed Air Control Valve (EBCV) Mixture Control Valve (MCV) Electric Air Control Valve (EACV)
MDP	Manifold Differential Pressure	–
MFI	Multiport Fuel Injection	Electronic Fuel Injection (EFI)
MIL	Malfunction Indicator Lamp	Check Engine Lamp
MST	Manifold Surface Temperature	–
MVZ	Manifold Vacuum Zone	–
NVRAM	Non–Volatile Random Access Memory	–
O2S	Oxygen Sensor	Oxygen Sensor, O_2 Sensor (O_2S)
OBD	On–Board Diagnostic	On–Board Diagnostic System (OBD)
OC	Oxidation Catalytic Converter	Oxidation Catalyst Convert (OC), CCo
OP	Open Loop	Open Loop
PAIR	Pulsed Secondary Air Injection	Air Suction (AS)
PCM	Powertrain Control Module	–
PNP	Park/Neutral Position	–
PROM	Programmable Read Only Memory	–
PSP	Power Steering Pressure	–
PTOX	Periodic Trap Oxidizer	Diesel Particulate Filter (DPF) Diesel Particulate Trap (DPT)
RAM	Random Access Memory	Random Access Memory (RAM)
RM	Relay Module	–
ROM	Read Only Memory	Read Only Memory (ROM)
RPM	Engine Speed	Engine Speed
SC	Supercharger	Supercharger
SCB	Supercharger Bypass	E–ABV
SFI	Sequential Multiport Fuel Injection	Electronic Fuel Injection (EFI), Sequential Injection
SPL	Smoke Puff Limiter	–
SRI	Service Reminder Indicator	–
SRT	System Readiness Test	–
ST	Scan Tool	–
TB	Throttle Body	Throttle Body
TBI	Throttle Body Fuel Injection	Single Point Injection Central Fuel Injection (Ci)
TC	Turbocharger	Turbocharger
TCC	Torque Converter Clutch	Torque Converter

TCM	Transmission Control Module	Transmission ECU, ECT ECU
TP	Throttle Position	Throttle Position
TR	Transmission Range	–
TVV	Thermal Vacuum Valve	Bimetallic Vacuum Switching Valve (BVSV) Thermostatic Vacuum Switching Valve (TVSV)
TWC	Three–Way Catalytic Converter	Three–Way Catalytic (TWC) Manifold Converter CC_{RO}
TWC+OC	Three–Way + Oxidation Catalytic Converter	CC_R + CCo
VAF	Volume Air Flow	Air Flow Meter
VR	Voltage Regulator	Voltage Regulator
VSS	Vehicle Speed Sensor	Vehicle Speed Sensor
WOT	Wide Open Throttle	Full Throttle
WU–OC	Warm Up Oxidation Catalytic Converter	–
WU–TWC	Warm Up Three–Way Catalytic Converter	–
3GR	Third Gear	–
4GR	Fourth Gear	–

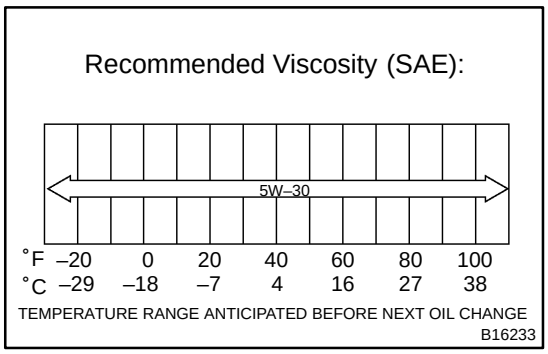

OIL AND FILTER

INSPECTION

LU010–06

1. CHECK ENGINE OIL QUALITY

Check the oil for deterioration, entry of water, discoloring or thinning.

If the quality is visibly poor, replace the oil.

Oil grade:

API grade SL Energy–Conserving or ILSAC multi-grade engine oil.

2. CHECK ENGINE OIL LEVEL

After warming up the engine and then 5 minutes after the engine stop, the oil level should be between the low level and full level marks on the dipstick.

If low, check for leakage and add oil up to the full level mark.

NOTICE:

Do not fill with engine oil above the full level mark.

3. REMOVE ENGINE UNDER COVER

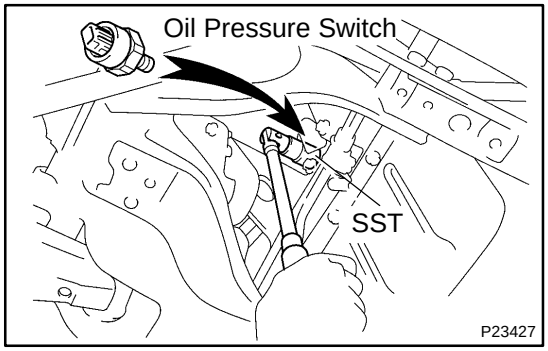

4. REMOVE OIL PRESSURE SWITCH

Using SST, remove the oil pressure switch.

SST 09268–46021

5. INSTALL OIL PRESSURE GAUGE

Install an oil pressure gauge to an adaptor.

6. WARM UP ENGINE

Allow the engine to warm up to normal operating temperature.

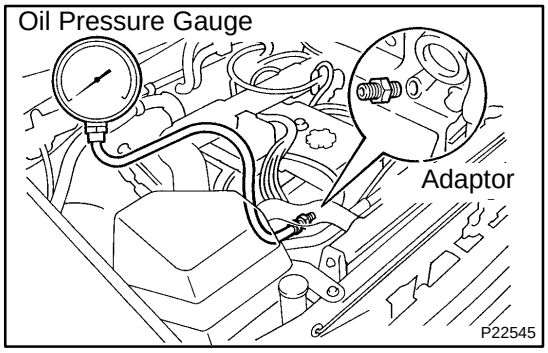

7. CHECK OIL PRESSURE

Oil pressure:

at idle	29 kPa (0.3 kgf/cm^2, 4.3 psi) or more
at 3,000 rpm	245 – 490 kPa (2.5 – 5.0 kgf/cm^2, 36 – 71 psi)

8. REMOVE OIL PRESSURE GAUGE

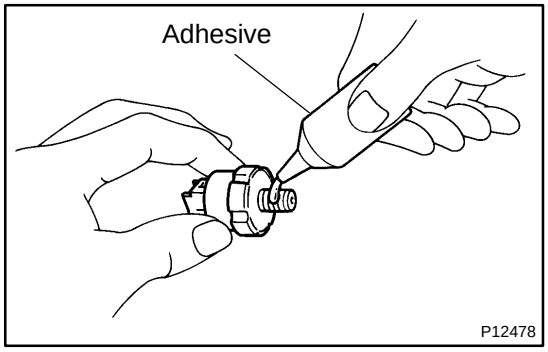

9. REINSTALL OIL PRESSURE SWITCH

(a) Apply adhesive to 2 or 3 threads of the oil pressure switch.
Adhesive: Part No. 08833–00080, THREE BOND 1344, LOCTITE 242 or equivalent

(b) Using SST, install the oil pressure switch.
SST 09268–46021

10. REINSTALL ENGINE UNDER COVER

11. START ENGINE AND CHECK FOR LEAKS

LU011–02

REPLACEMENT

CAUTION:

- **Prolonged and repeated contact with mineral oil will result in the removal of natural fats from the skin, leading to dryness, irritation and dermatitis. In addition, used engine oil contains potentially harmful contaminants which may cause skin cancer.**
- **Care should be taken, therefore, when changing engine, oil to minimize the frequency and length of time your skin is exposed to used engine oil. Protective clothing and gloves that cannot be penetrated by oil should be worn. The skin should be thoroughly washed with soap and water, or use water–less hand cleaner, to remove any used engine oil. Do not use gasoline, thinners, or solvents.**
- **In order to preserve the environment, used oil and used oil filters must be disposed of only at designated disposal sites.**

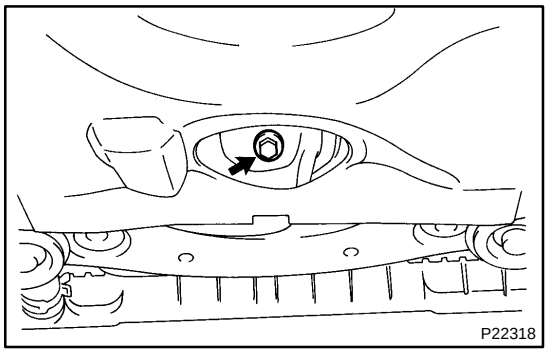

1. DRAIN ENGINE OIL

(a) Remove the oil filler cap.

(b) Remove the oil drain plug, and drain the oil into a container.

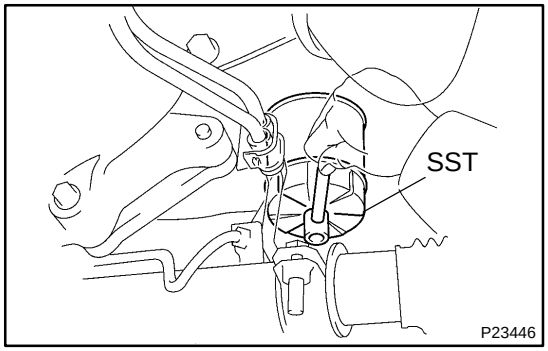

2. REPLACE OIL FILTER

(a) Using SST, remove the oil filter.
SST 09228–07501

(b) Check and clean the oil filter installation surface.

(c) Apply clean engine oil to the gasket of a new oil filter.

(d) Lightly screw the oil filter into place, and tighten it until the gasket contacts the seat.

(e) Using SST, tighten it an additional 3/4 turn.
SST 09228–07501

3. REFILL WITH ENGINE OIL

(a) Clean and install the oil drain plug with a new gasket.
Torque: 37 N·m (375 kgf·cm, 27 ft·lbf)

(b) Fill with new engine oil.
Oil capacity:

2WD		
Drain and refill	w/ Oil filter change	5.5 liters (5.8 US qts, 4.8 imp. qts)
	w/o Oil filter change	4.8 liters (5.0 US qts, 4.2 imp. qts)
Dry fill		6.2 liters (6.6 US qts, 5.5 imp. qts)
4WD		
Drain and refill	w/ Oil filter change	5.4 liters (5.7 US qts, 4.8 imp. qts)
	w/o Oil filter change	4.7 liters (5.0 US qts, 4.1 imp. qts)
Dry fill		5.8 liters (6.1 US qts, 5.1 imp. qts)

(c) Reinstall the oil filler cap.

4. START ENGINE AND CHECK FOR LEAKS

5. RECHECK ENGINE OIL LEVEL

OIL PUMP

COMPONENTS

LU0NN–01

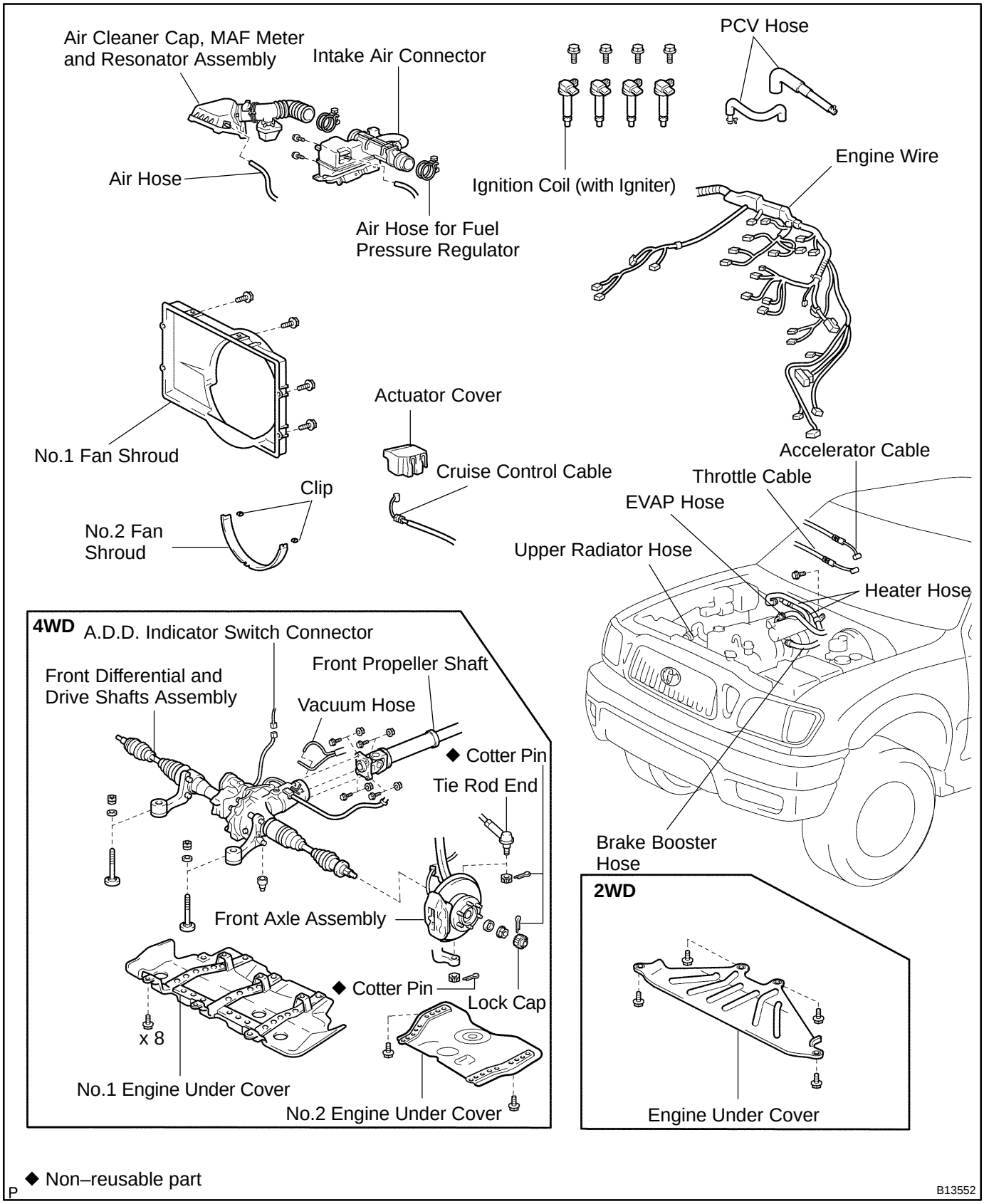

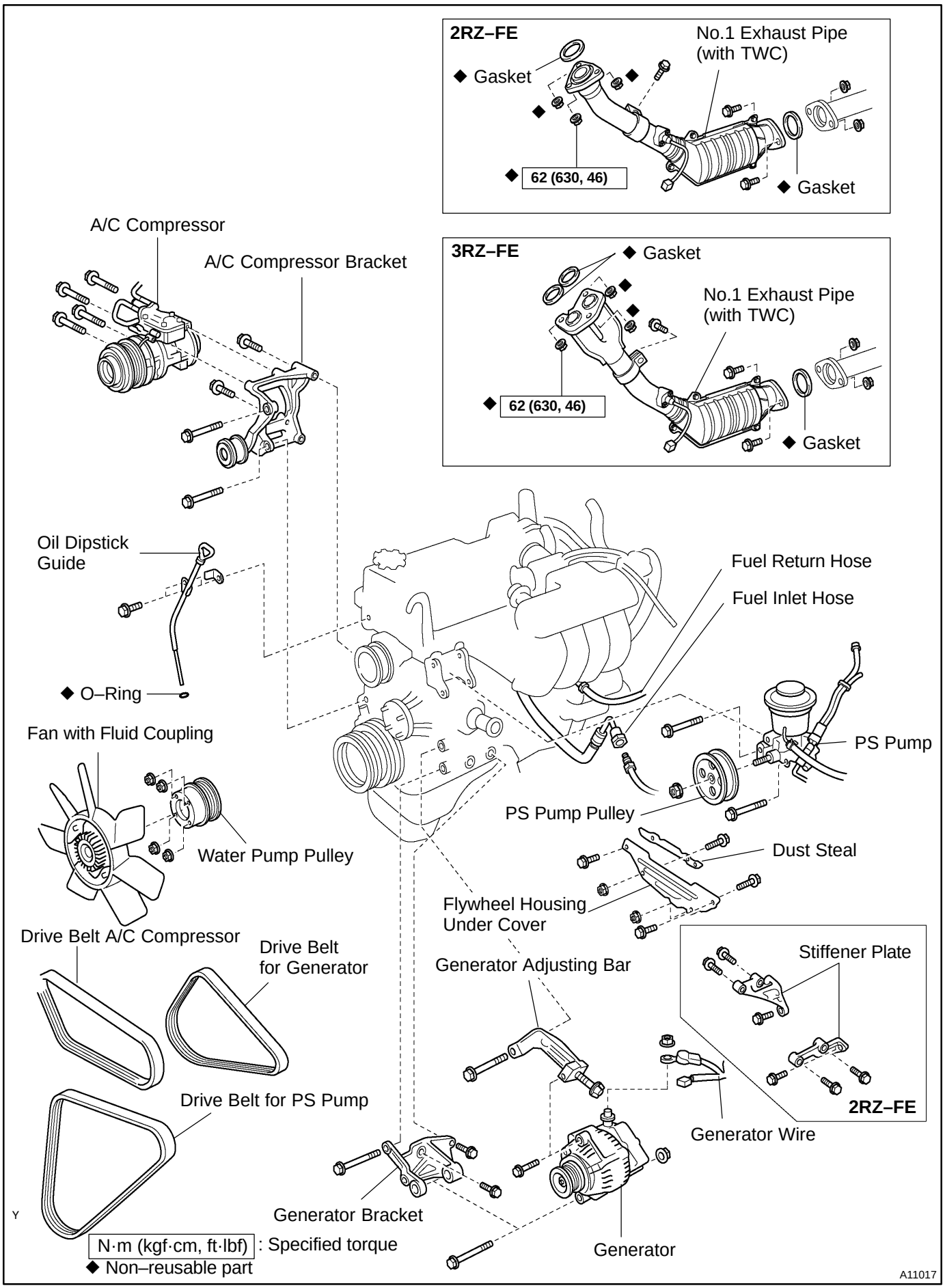
2RZ–FE
No.1 Exhaust Pipe (with TWC)
◆ Gasket
◆ 62 (630, 46)
◆ Gasket
3RZ–FE
◆ Gasket
No.1 Exhaust Pipe (with TWC)
◆ 62 (630, 46)
◆ Gasket
A/C Compressor
A/C Compressor Bracket
Oil Dipstick Guide
◆ O–Ring
Fuel Return Hose
Fuel Inlet Hose
PS Pump
PS Pump Pulley
Fan with Fluid Coupling
Water Pump Pulley
Dust Steal
Flywheel Housing Under Cover
Drive Belt A/C Compressor
Drive Belt for Generator
Generator Adjusting Bar
Stiffener Plate
2RZ–FE
Drive Belt for PS Pump
Generator Wire
Generator Bracket
Generator
Y
N·m (kgf·cm, ft·lbf) : Specified torque
◆ Non–reusable part
A11017

for 2RZ–FE

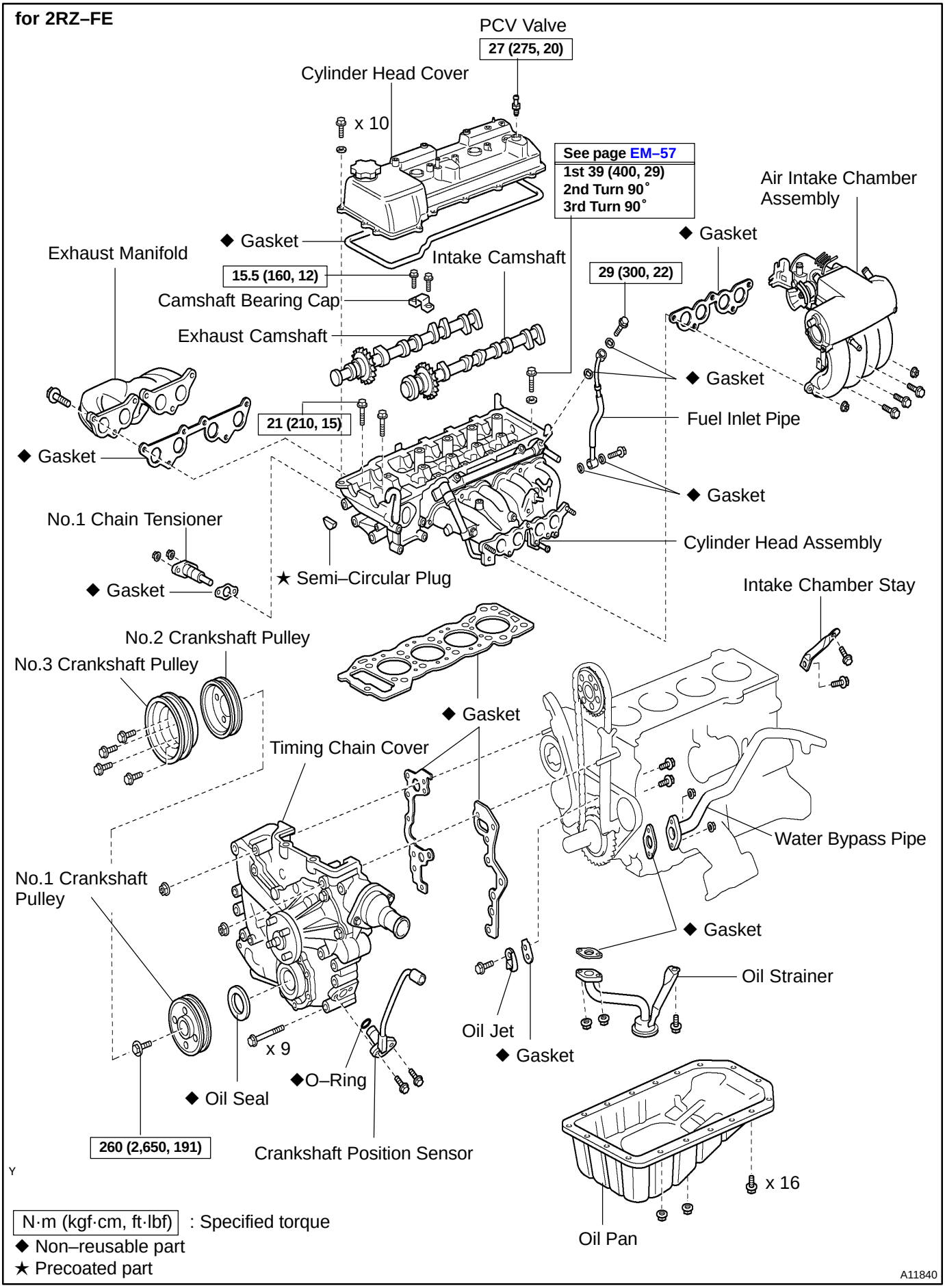
PCV Valve
27 (275, 20)
Cylinder Head Cover
x 10
See page EM–57
1st 39 (400, 29)
2nd Turn 90°
3rd Turn 90°
Air Intake Chamber Assembly
◆ Gasket
Exhaust Manifold
◆ Gasket
Intake Camshaft
15.5 (160, 12)
29 (300, 22)
Camshaft Bearing Cap
Exhaust Camshaft
◆ Gasket
Fuel Inlet Pipe
21 (210, 15)
◆ Gasket
◆ Gasket
No.1 Chain Tensioner
Cylinder Head Assembly
◆ Gasket
★ Semi–Circular Plug
Intake Chamber Stay
No.2 Crankshaft Pulley
No.3 Crankshaft Pulley
◆ Gasket
Timing Chain Cover
Water Bypass Pipe
No.1 Crankshaft Pulley
◆ Gasket
Oil Strainer
Oil Jet
◆ Gasket
x 9
◆O–Ring
◆ Oil Seal
260 (2,650, 191)
Crankshaft Position Sensor
x 16
Oil Pan
Y
N·m (kgf·cm, ft·lbf) : Specified torque
◆ Non–reusable part
★ Precoated part
A11840

for 3RZ–FE

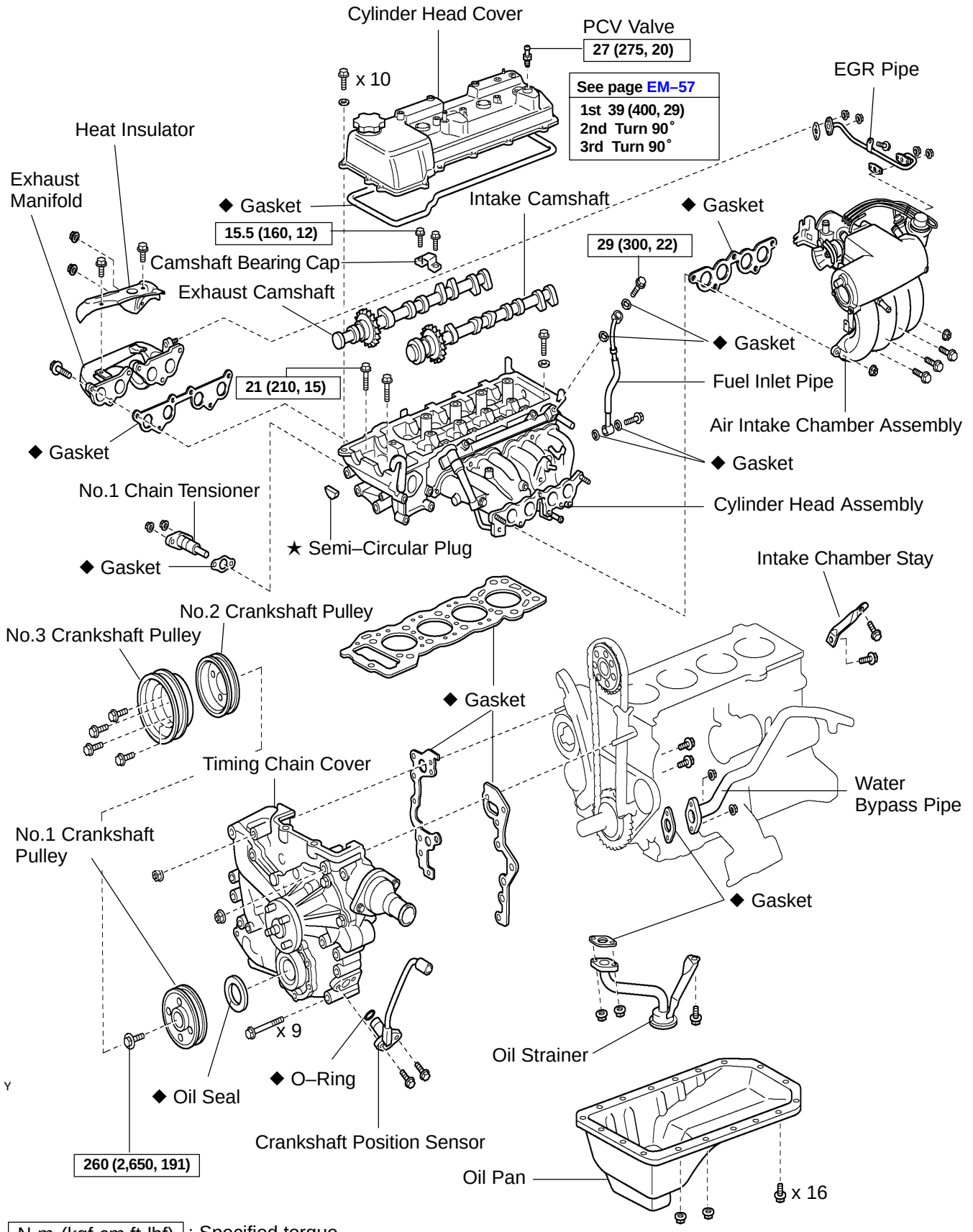
Cylinder Head Cover
PCV Valve
27 (275, 20)
x 10
See page EM–57
1st 39 (400, 29)
2nd Turn 90°
3rd Turn 90°
EGR Pipe
Heat Insulator
Exhaust Manifold
◆ Gasket
15.5 (160, 12)
Intake Camshaft
◆ Gasket
29 (300, 22)
Camshaft Bearing Cap
Exhaust Camshaft
◆ Gasket
Fuel Inlet Pipe
21 (210, 15)
Air Intake Chamber Assembly
◆ Gasket
◆ Gasket
No.1 Chain Tensioner
Cylinder Head Assembly
★ Semi–Circular Plug
◆ Gasket
Intake Chamber Stay
No.2 Crankshaft Pulley
No.3 Crankshaft Pulley
◆ Gasket
Timing Chain Cover
Water Bypass Pipe
No.1 Crankshaft Pulley
◆ Gasket
x 9
Oil Strainer
◆ O–Ring
◆ Oil Seal
Crankshaft Position Sensor
260 (2,650, 191)
Oil Pan
x 16
N·m (kgf·cm,ft·lbf) : Specified torque
◆ Non–reusable part
★ Precoated part
A11345

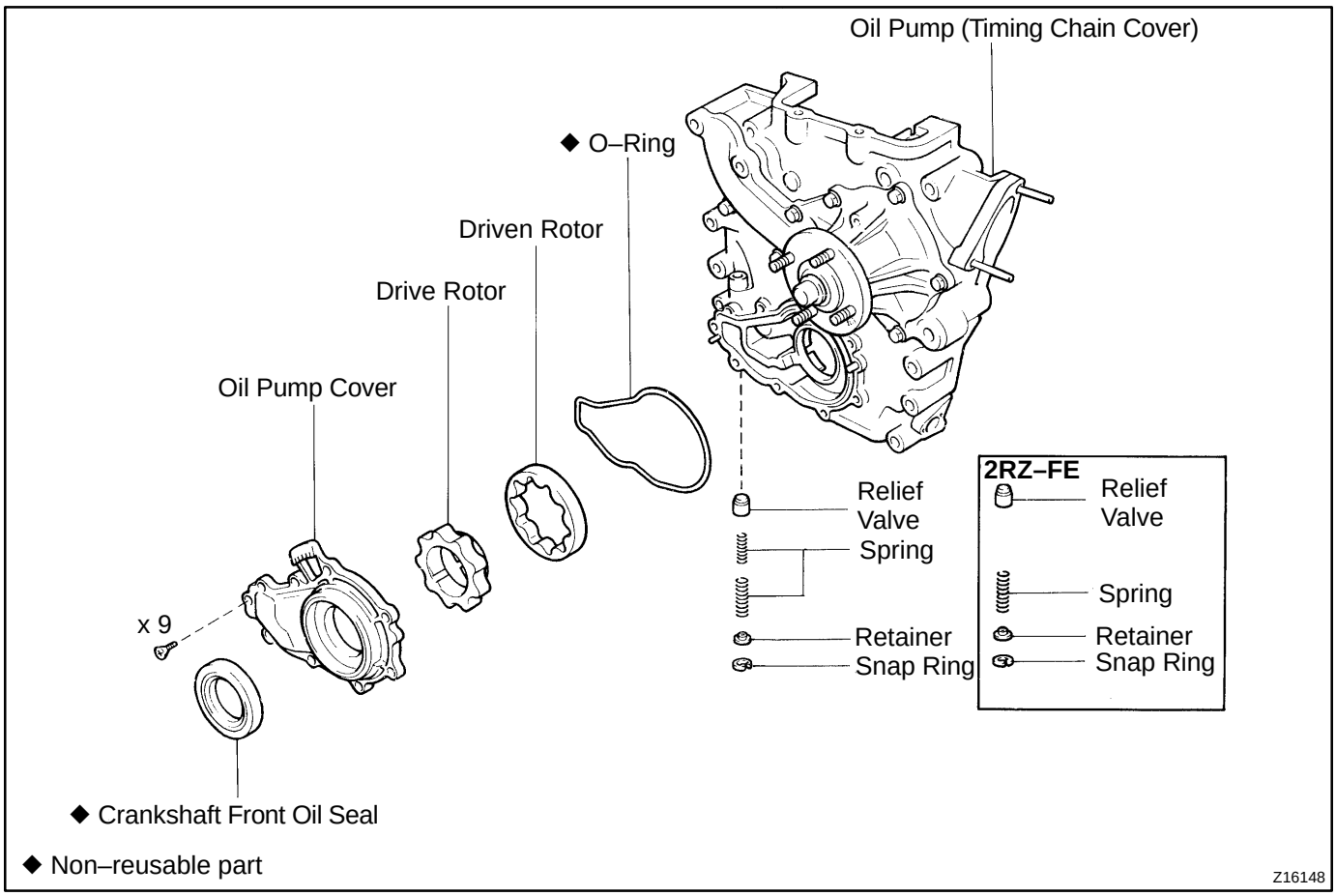
Oil Pump (Timing Chain Cover)
◆ O–Ring
Driven Rotor
Drive Rotor
Oil Pump Cover
x 9
◆ Crankshaft Front Oil Seal
◆ Non–reusable part
Relief Valve
Spring
Retainer
Snap Ring
2RZ–FE
Relief Valve
Spring
Retainer
Snap Ring
Z16148

LU014–02

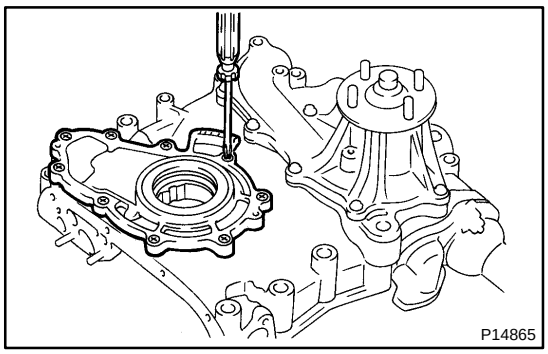

DISASSEMBLY

1. REMOVE DRIVE AND DRIVEN ROTORS

Remove the 9 screws, pump cover, drive rotor, driven rotor and O–ring.

2. REMOVE RELIEF VALVE

(a) Using snap ring pliers, remove the snap ring.

(b) Remove the retainer, spring(s) and relief valve.

LU015–02

INSPECTION

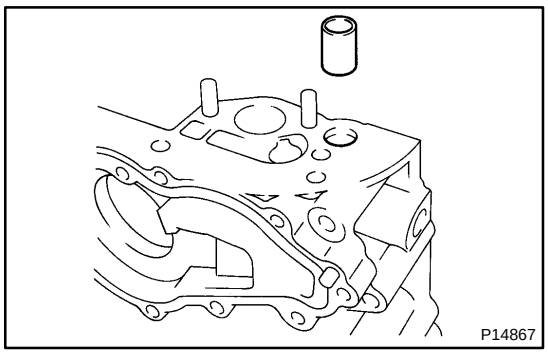

1. INSPECT RELIEF VALVE

Coat the relief valve with engine oil and check that it falls smoothly into the valve hole by its own weight.

If the valve does not fall smoothly, replace the valve and/or oil pump assembly.

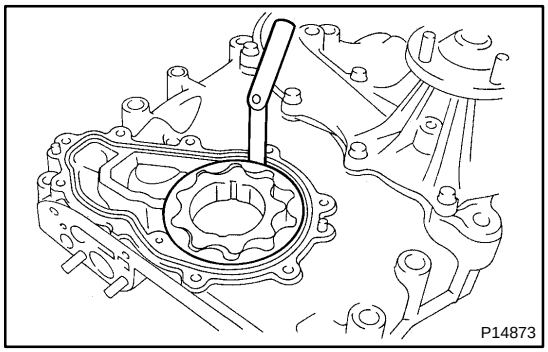

2. INSPECT DRIVE AND DRIVEN ROTORS

(a) Inspect the rotor for body clearance.

Using a feeler gauge, measure the clearance between the driven rotor and pump body.

Standard clearance:
0.100 – 0.175 mm (0.0039 – 0.0069 in.)
Maximum body clearance: 0.30 mm (0.0118 in.)

If the clearance is greater than the maximum, replace the oil pump rotor set and/or pump body.

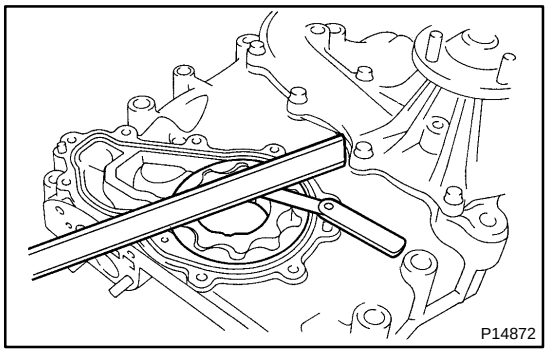

(b) Inspect the rotors for tip clearance.

Using a feeler gauge, measure the clearance between the drive and driven rotors.

Standard clearance:
0.030 – 0.090 mm (0.0012 – 0.0035 in.)
Maximum side clearance: 0.15 mm (0.0059 in.)

If the clearance is greater than the maximum, replace the oil pump rotor set.

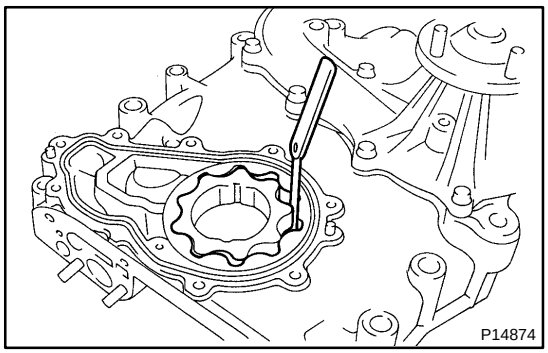

(c) Inspect the rotors for side clearance.

Using a feeler gauge and precision straight edge, measure the side clearance between the rotors and precision straight edge.

Standard clearance:
0.110 – 0.240 mm (0.0043 – 0.0094 in.)
Maximum tip clearance: 0.25 mm (0.0098 in.)

If the clearance is greater than the maximum, replace the oil pump rotor set and/or pump body.

LU018–02

INSTALLATION

1. INSTALL TIMING CHAIN COVER (See page EM–25)
2. INSTALL WATER INLET AND WATER INLET HOUSING
3. INSTALL CYLINDER HEAD ASSEMBLY (See page EM–57)

LU017–02

REASSEMBLY

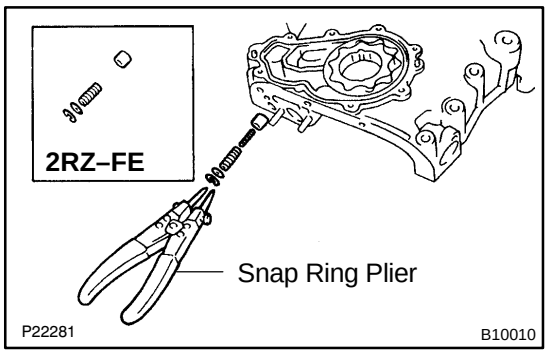

1. INSTALL RELIEF VALVE

(a) Install the relief valve, spring(s) and retainer.

(b) Using snap ring pliers, install the snap ring.

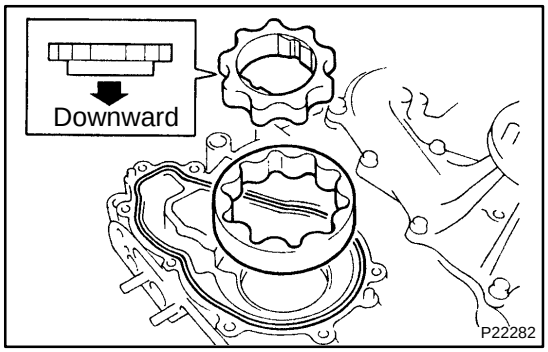

2. INSTALL DRIVE AND DRIVEN ROTORS

(a) Place the drive and driven rotors into the pump body.

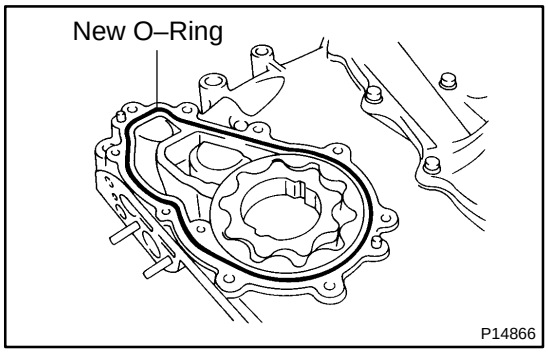

(b) Place a new O–ring to the pump body.

(c) Install the pump cover with the 9 screws.

LU013–02

REMOVAL

1. REMOVE CYLINDER HEAD ASSEMBLY (See page EM–34)

2. REMOVE WATER INLET AND WATER INLET HOUSING

(a) Remove the 2 nut, water inlet and thermostat.

(b) Remove the bolt and water inlet housing and gasket.

3. REMOVE TIMING CHAIN COVER (See page EM–17)

LU016–02

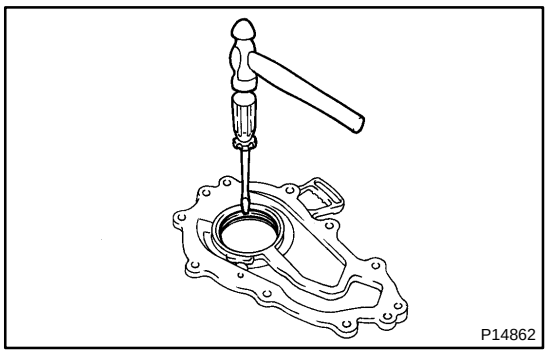

REPLACEMENT

REPLACE CRANKSHAFT FRONT OIL SEAL

HINT:

There are 2 methods ((a) and (b)) to replace the oil seal.

(a) If oil pump is removed from cylinder block:

(1) Using a screwdriver, pry out the oil seal.

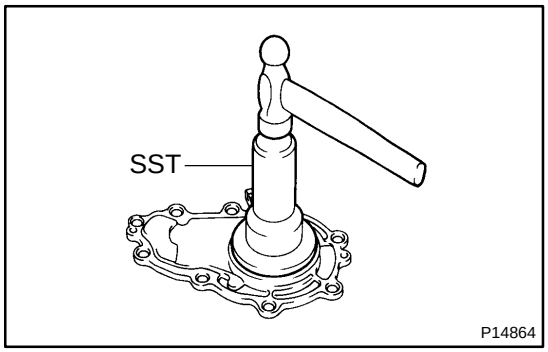

(2) Using SST and a hammer, tap in a new oil seal until its surface is flush with the oil pump case edge.

SST 09223–50010

(3) Apply MP grease to the oil seal lip.

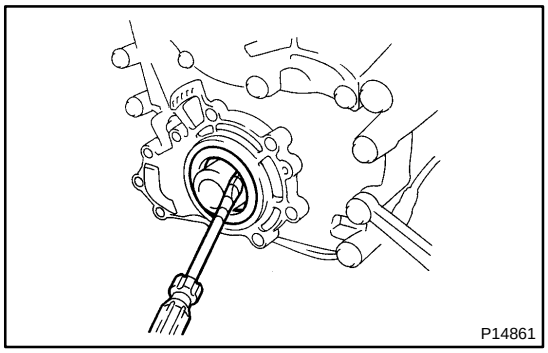

(b) If oil pump is installed cylinder block

(1) Using a screwdriver, pry out the oil seal.

NOTICE:

Be careful not to damage the crankshaft. Tape the screwdriver tip.

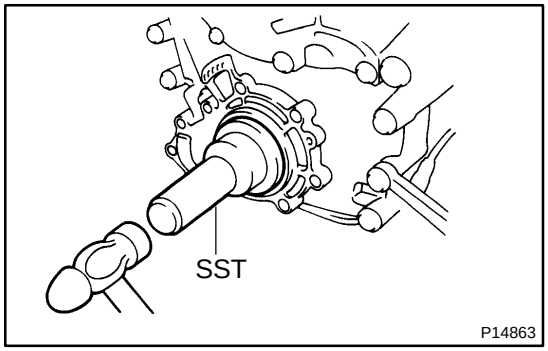

(2) Apply MP grease to a new oil seal lip.

(3) Using SST and a hammer, tap in the oil seal until its surface is flush with the oil pump case edge.

SST 09223–50010

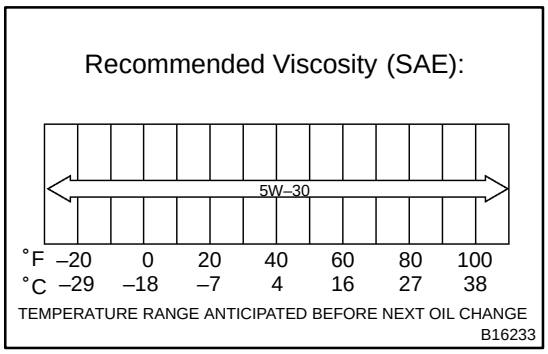

OIL AND FILTER

INSPECTION

LU022–06

1. CHECK ENGINE OIL QUALITY

Check the oil for deterioration, entry of water, discoloring or thinning.

If the quality is visibly poor, replace the oil.

Oil grade:

API grade SL Energy–Conserving or ILSAC multi-grade engine oil.

2. CHECK ENGINE OIL LEVEL

After warming up the engine and then 5 minutes after the engine stop, the oil level should be between the low level and full level marks on the dipstick.

If low, check for leakage and add oil up to the full level mark.

NOTICE:

Do not fill with engine oil above the full level mark.

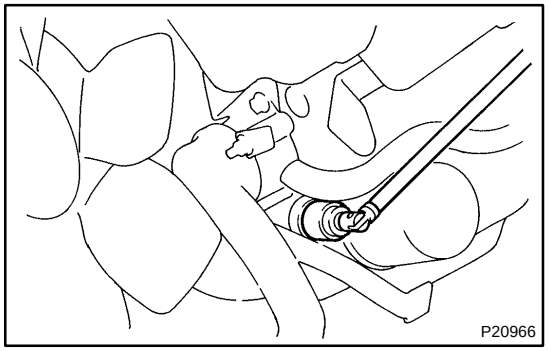

3. REMOVE OIL PRESSURE SWITCH

Using SST, remove the oil pressure switch.

SST 09268–46021

4. INSTALL OIL PRESSURE GAUGE

5. WARM UP ENGINE

Allow the engine to warm up to normal operating temperature.

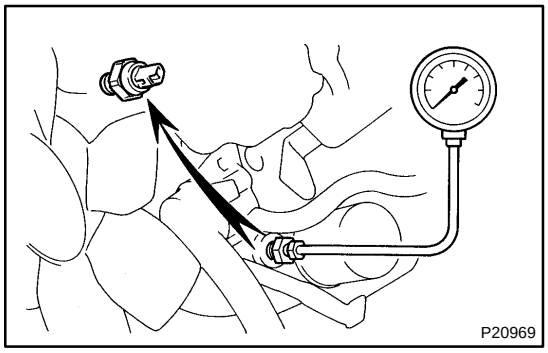

6. CHECK OIL PRESSURE

Oil pressure:

at idle	29 kPa (0.3 kgf/cm^2, 4.3 psi) or more
at 3,000 rpm	245 – 520 kPa (2.5 – 5.3 kgf/cm^2, 36 – 75 psi)

7. REMOVE OIL PRESSURE GAUGE

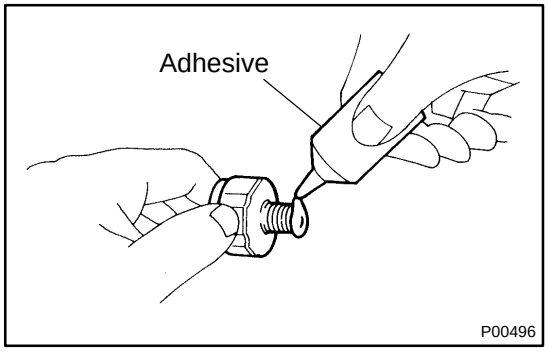

8. REINSTALL OIL PRESSURE SWITCH

(a) Apply adhesive to 2 or 3 threads.

Adhesive:

Part No. 08833–00080, THREE BOND 1344, LOCTITE 242 or equivalent

(b) Using SST, install the oil pressure switch.

SST 09268–46021

Torque: 15 N·m (150 kgf·cm, 11 ft·lbf)

9. START ENGINE AND CHECK FOR LEAKS

LU024–02

REPLACEMENT

CAUTION:

- **Prolonged and repeated contact with mineral oil will result in the removal of natural fats from the skin, leading to dryness, irritation and dermatitis. In addition, used engine oil contains potentially harmful contaminants which may cause skin cancer.**
- **Care should be taken, therefore, when changing engine, oil to minimize the frequency and length of time your skin is exposed to used engine oil. Protective clothing and gloves that cannot be penetrated by oil should be worn. The skin should be thoroughly washed with soap and water, or use water–less hand cleaner, to remove any used engine oil. Do not use gasoline, thinners, or solvents.**
- **In order to preserve the environment, used oil and used oil filters must be disposed of only at designated disposal sites.**

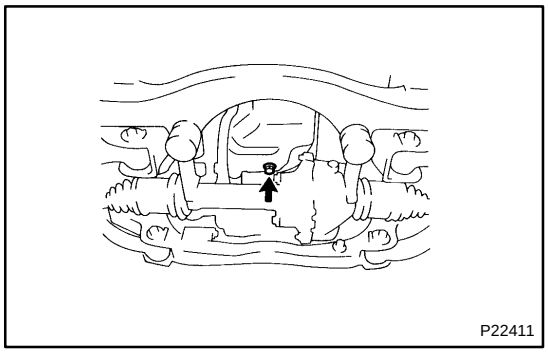

1. DRAIN ENGINE OIL

(a) Remove the oil filler cap.
(b) Remove the oil dipstick.
(c) Remove the oil drain plug and drain the oil into a container.

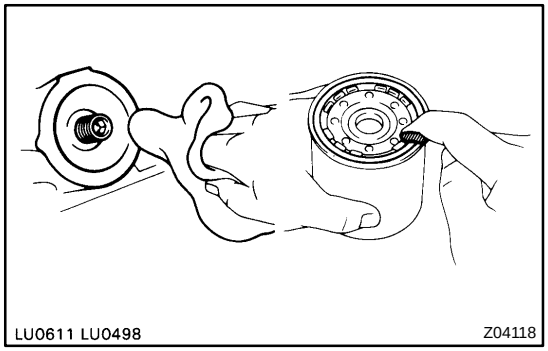

2. REPLACE OIL FILTER

(a) Using SST, remove the oil filter (located on left side of the cylinder block).
SST 09228–07501
(b) Clean the filter contact surface on the filter mounting.
(c) Apply clean engine oil to the gasket of a new oil filter.
(d) Tighten the filter by hand until the gasket contacts the seat of the filter mounting. Then using SST, give it an additional 3/4 turn to seat the filter.
SST 09228–07501

3. REFILL WITH ENGINE OIL

(a) Clean and install the oil drain plug with a new gasket.

(b) Fill the engine with new oil.

Oil capacity:

2WD		
Drain and refill	w/ Oil filter change	5.9 liters (6.2 US qts, 5.2 imp. qts)
	w/o Oil filter change	5.1 liters (5.4 US qts, 4.5 imp. qts)
Dry fill		6.3 liters (6.7 US qts, 5.5 imp. qts)
4WD		
Drain and refill	w/ Oil filter change	5.2 liters (5.5 US qts, 4.6 imp. qts)
	w/o Oil filter change	4.9 liters (5.2 US qts, 4.3 imp. qts)
Dry fill		5.9 liters (6.2 US qts, 5.2 imp. qts)

(c) Reinstall the oil filler cap.

4. START ENGINE AND CHECK FOR LEAKS

5. RECHECK ENGINE LEVEL

OIL COOLER

COMPONENTS

LU01L–03

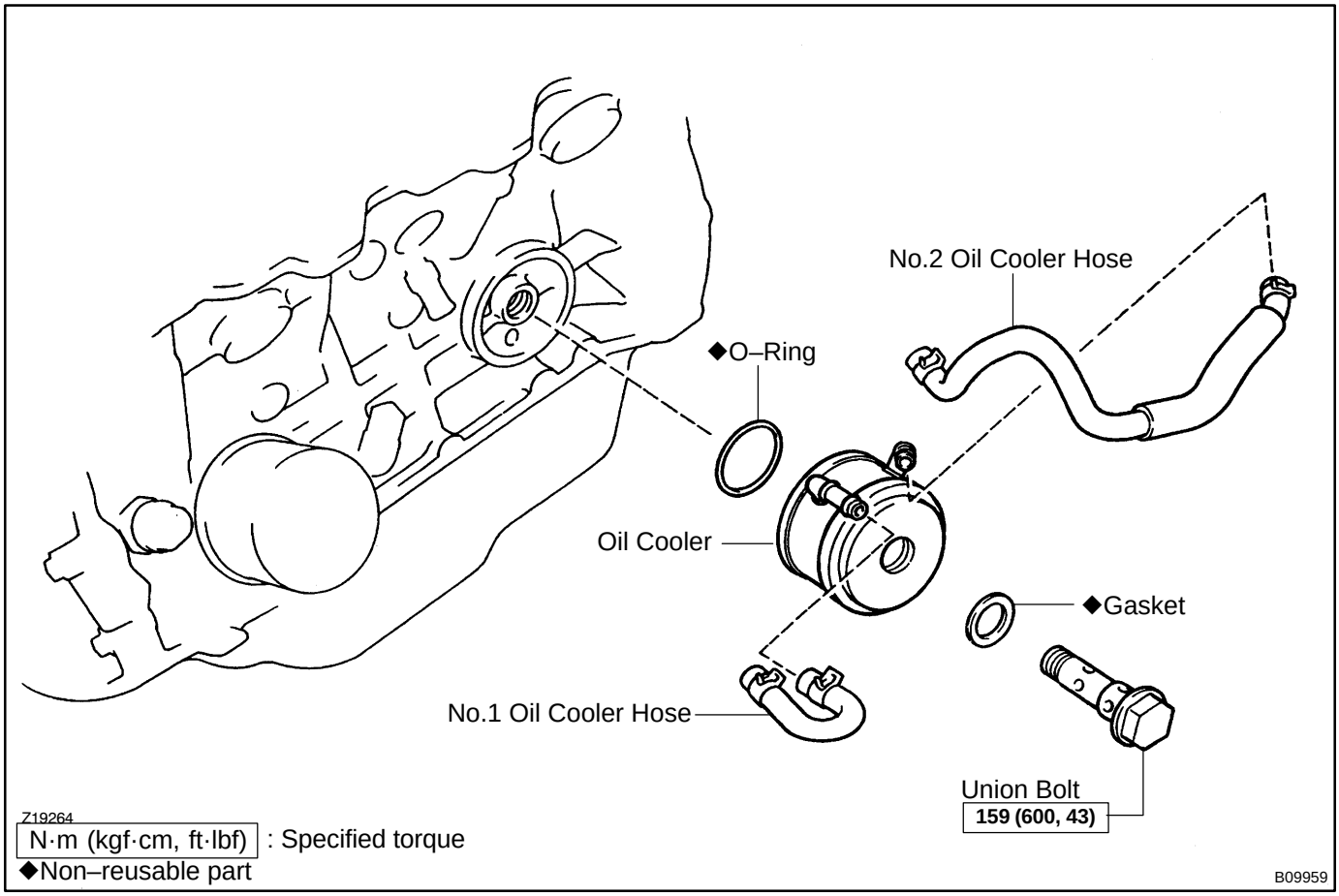

LU0IS–01

INSPECTION

INSPECT OIL COOLER

Check the oil cooler for damage or clogging.
If necessary, replace the oil cooler.

LU0IT–02

INSTALLATION

Installation is in the reverse order of removal (See page LU–18).

LU0IR–01

REMOVAL

1. DRAIN ENGINE COOLANT

2. DISCONNECT OIL COOLER HOSES

Disconnect the No.1 and No.2 oil cooler hoses.

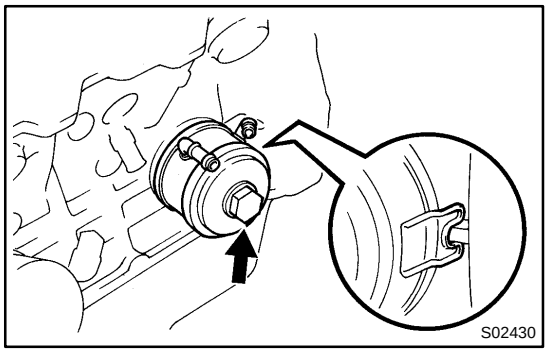

3. REMOVE OIL COOLER

Remove the bolt, relief valve, gaskets and oil cooler.

Torque: 59 N·m (600 kgf·cm, 43 ft·lbf)

HINT:

At the time of installation, please refer to the following items.

- Replace the O–ring with a new part.
- Use a new gasket to the relief valve.

OIL PUMP

COMPONENTS

LU021–06

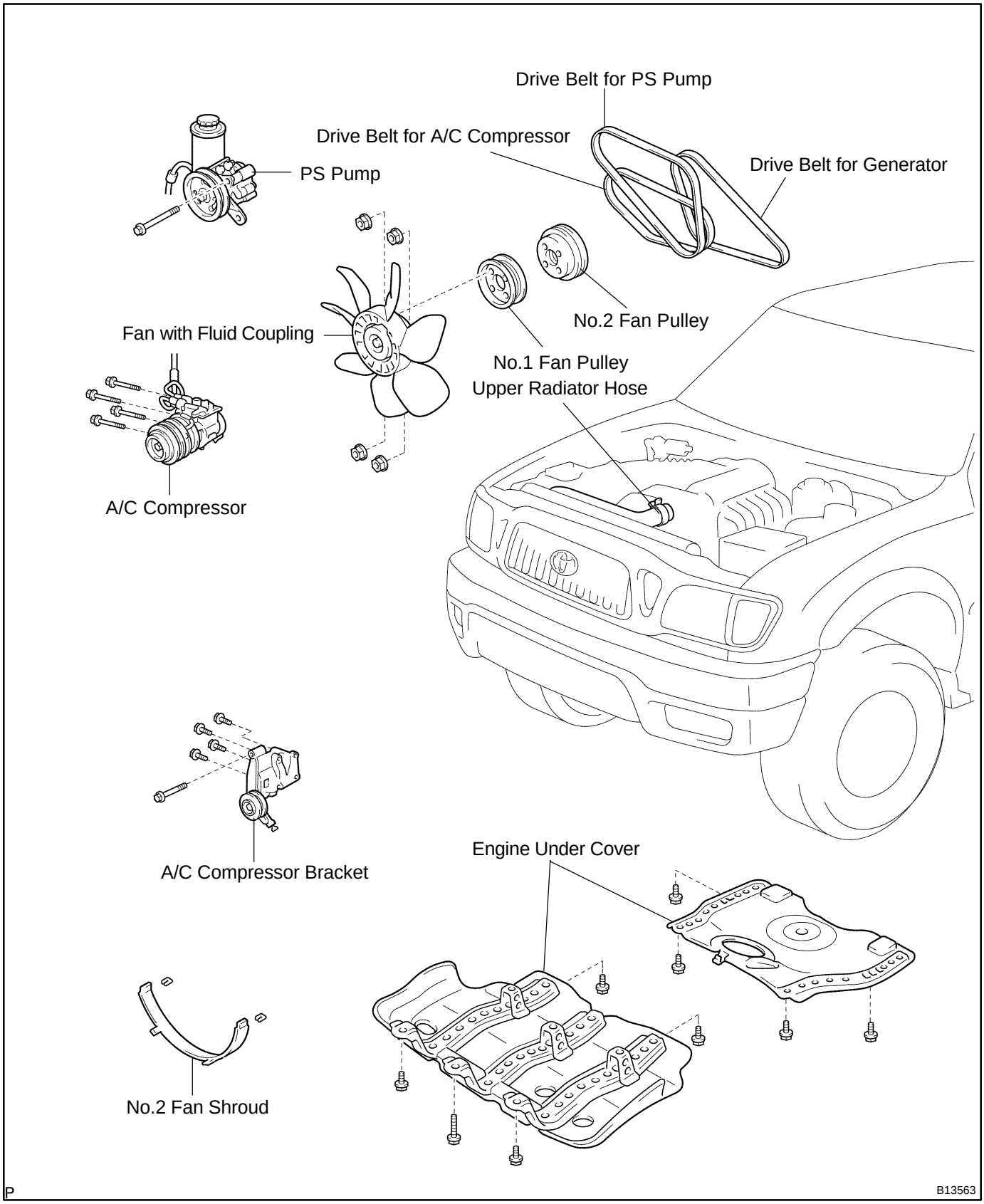

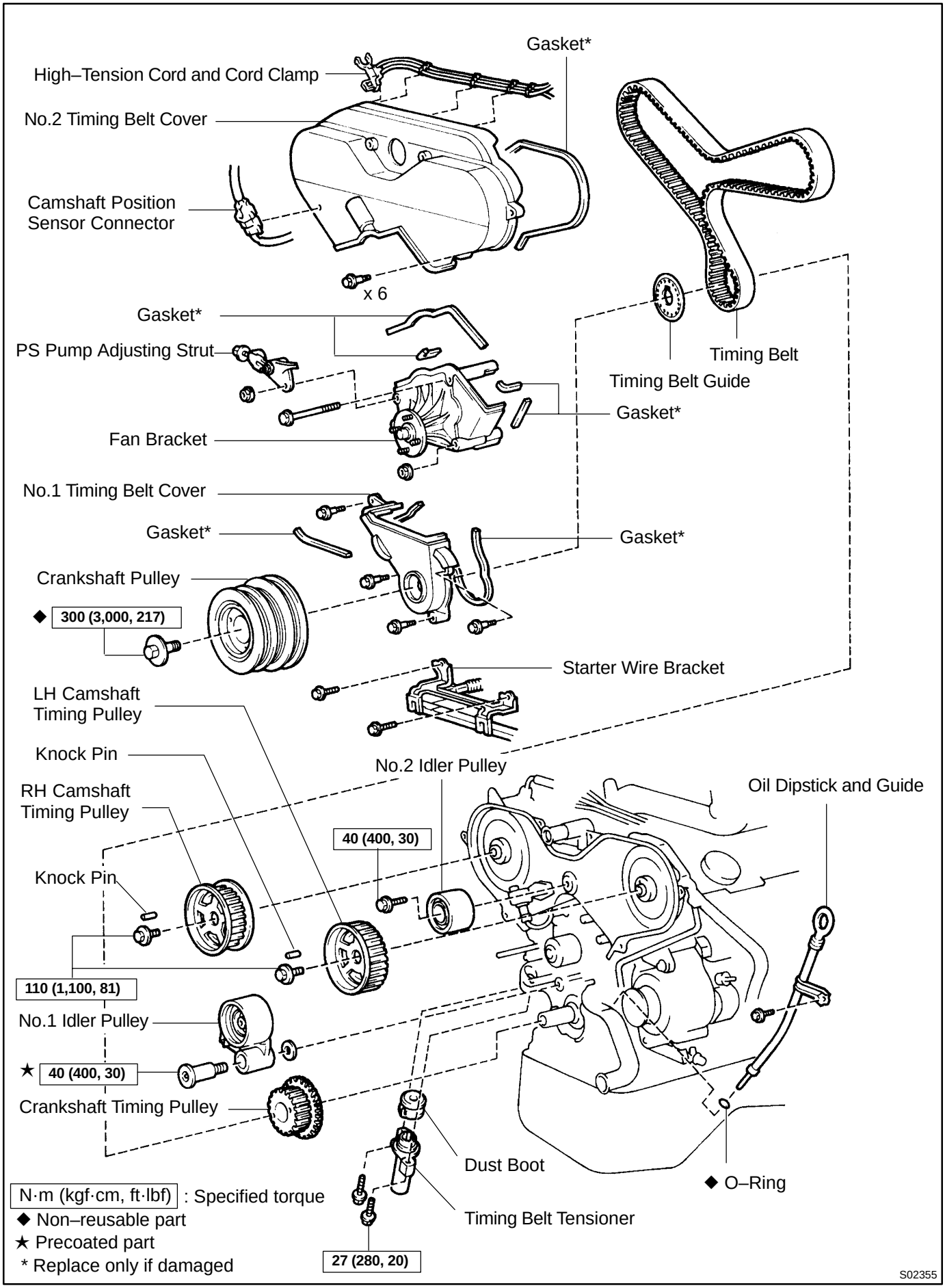
Gasket*
High–Tension Cord and Cord Clamp
No.2 Timing Belt Cover
Camshaft Position Sensor Connector
x 6
Gasket*
PS Pump Adjusting Strut
Timing Belt
Timing Belt Guide
Gasket*
Fan Bracket
No.1 Timing Belt Cover
Gasket*
Gasket*
Crankshaft Pulley
◆ 300 (3,000, 217)
Starter Wire Bracket
LH Camshaft Timing Pulley
Knock Pin
No.2 Idler Pulley
Oil Dipstick and Guide
RH Camshaft Timing Pulley
40 (400, 30)
Knock Pin
110 (1,100, 81)
No.1 Idler Pulley
★ 40 (400, 30)
Crankshaft Timing Pulley
Dust Boot
◆ O–Ring
Timing Belt Tensioner
27 (280, 20)
N·m (kgf·cm, ft·lbf) : Specified torque
◆ Non–reusable part
★ Precoated part
* Replace only if damaged
S02355

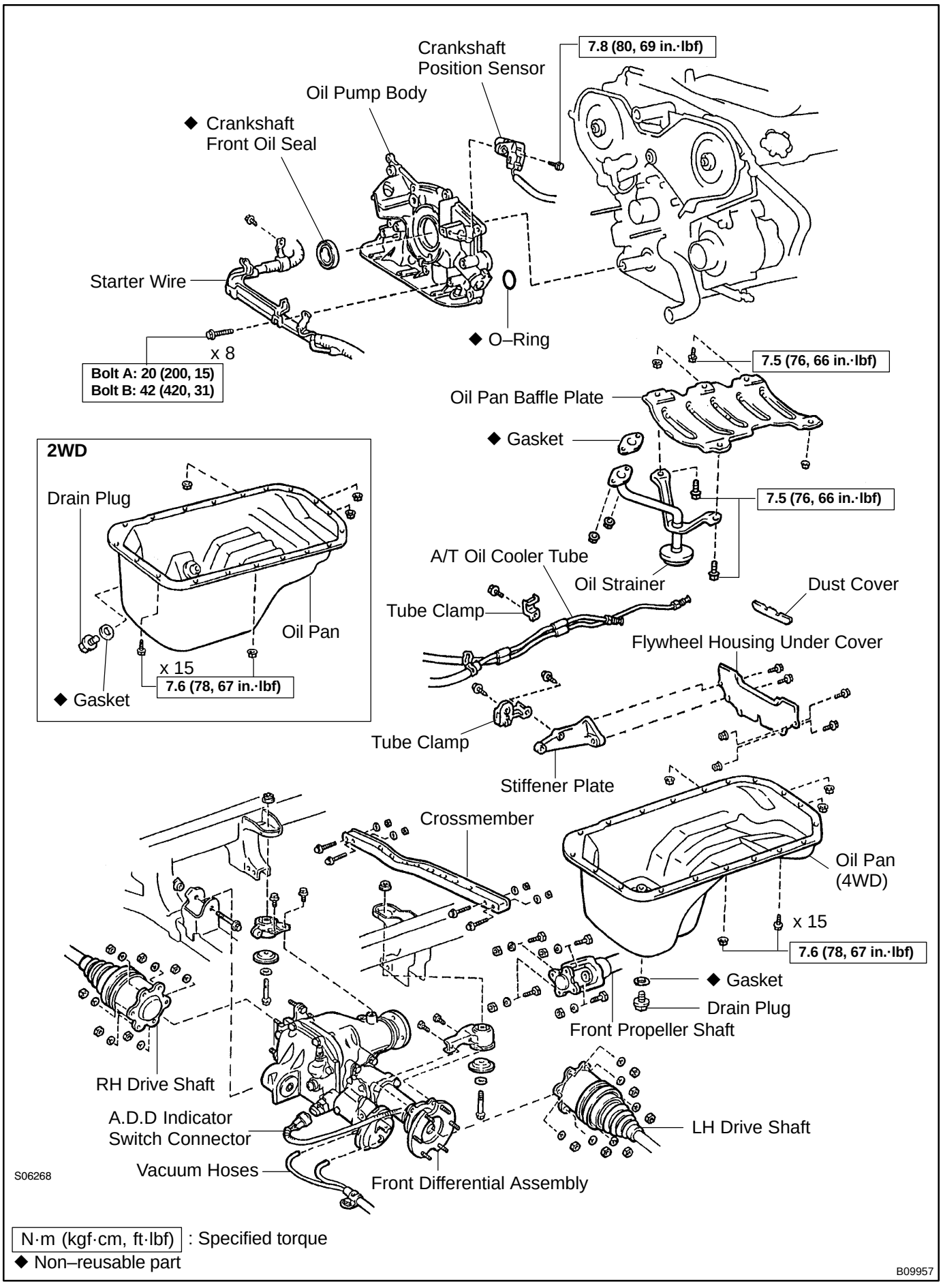
Crankshaft Position Sensor
7.8 (80, 69 in.·lbf)
Oil Pump Body
◆ Crankshaft Front Oil Seal
Starter Wire
◆ O–Ring
x 8
Bolt A: 20 (200, 15)
Bolt B: 42 (420, 31)
7.5 (76, 66 in.·lbf)
Oil Pan Baffle Plate
◆ Gasket
7.5 (76, 66 in.·lbf)
A/T Oil Cooler Tube
Oil Strainer
Dust Cover
Tube Clamp
Flywheel Housing Under Cover
Tube Clamp
Stiffener Plate
2WD
Drain Plug
Oil Pan
x 15
7.6 (78, 67 in.·lbf)
◆ Gasket
Crossmember
Oil Pan (4WD)
x 15
7.6 (78, 67 in.·lbf)
◆ Gasket
Drain Plug
Front Propeller Shaft
RH Drive Shaft
A.D.D Indicator Switch Connector
LH Drive Shaft
Vacuum Hoses
Front Differential Assembly
S06268
N·m (kgf·cm, ft·lbf) : Specified torque
◆ Non–reusable part
B09957

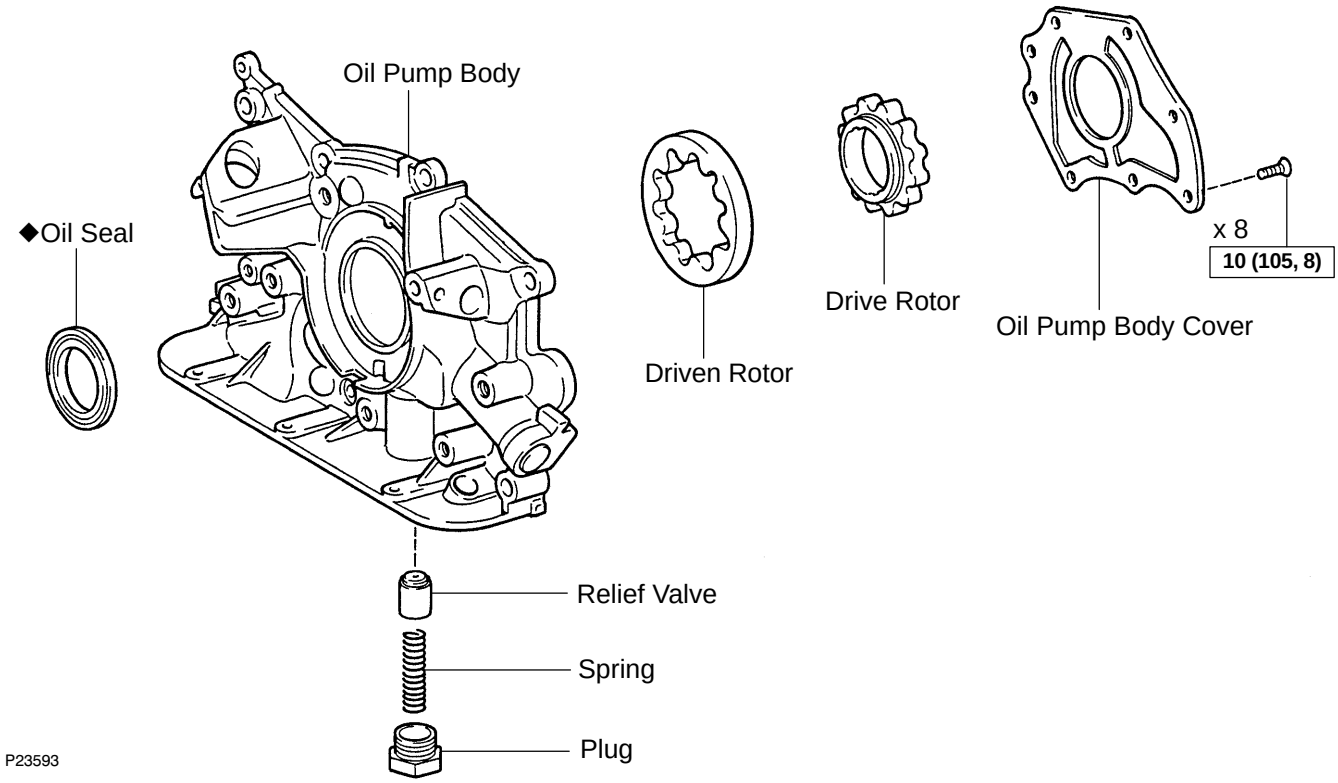

N·m (kgf·cm, ft·lbf) : Specified torque
◆ Non–reusable part

B09958

LU01G–03

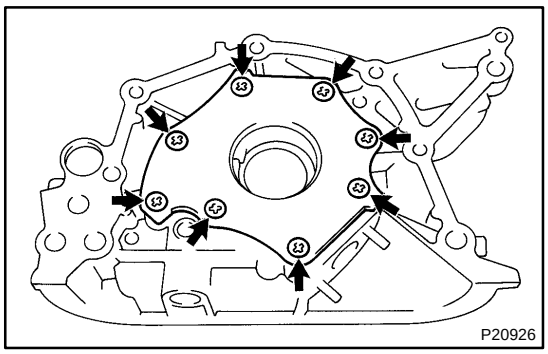

DISASSEMBLY

1. REMOVE DRIVEN AND DRIVE ROTORS

(a) Remove the 8 screws and pump body cover.
Torque: 10 N·m (105 kgf·cm, 8 ft·lbf)

(b) Remove the drive and driven rotors.

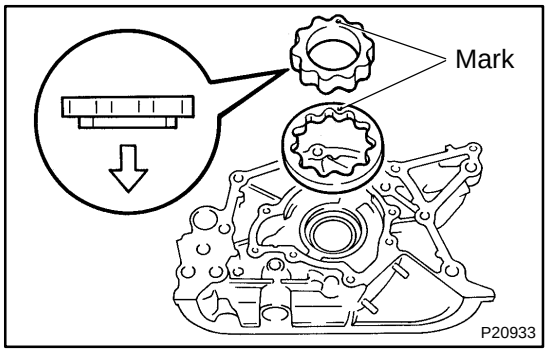

HINT:
At the time of reassembly, please refer to the following items.
Place the drive and driven rotor into pump body with the marks facing the pump body cover side.

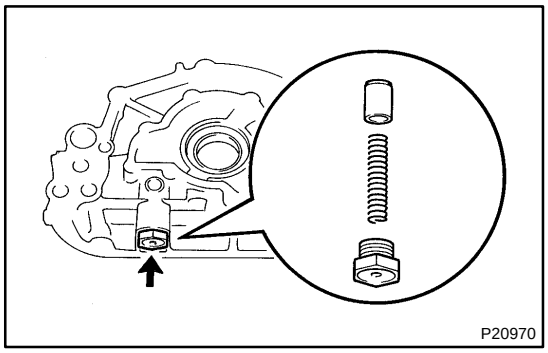

2. REMOVE RELIEF VALVE

Remove the plug, spring and relief valve.

LU01H–03

INSPECTION

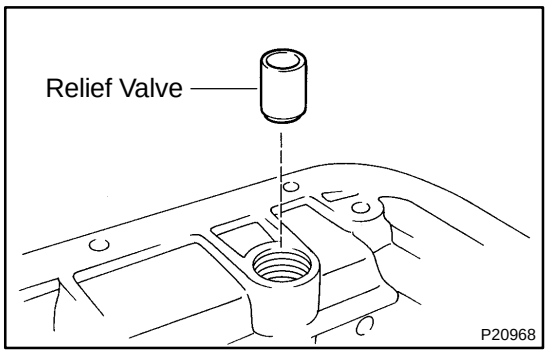

1. INSPECT RELIEF VALVE

Coat the relief valve with engine oil and check that it falls smoothly into the valve hole by its own weight.

If the valve does not fall smoothly, replace the valve and/or oil pump assembly.

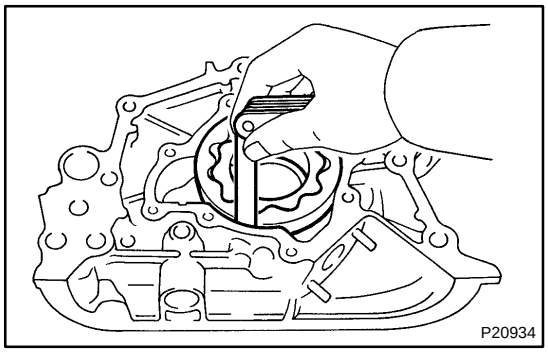

2. INSPECT DRIVE AND DRIVEN ROTORS

(a) Inspect the rotor for body clearance.

Using a feeler gauge, measure the clearance between the driven rotor and pump body.

Standard clearance:
0.10 – 0.18 mm (0.0039 – 0.0069 in.)
Maximum clearance: 0.30 mm (0.0118 in.)

If the clearance is greater than the maximum, replace the oil pump rotor set and/or pump body.

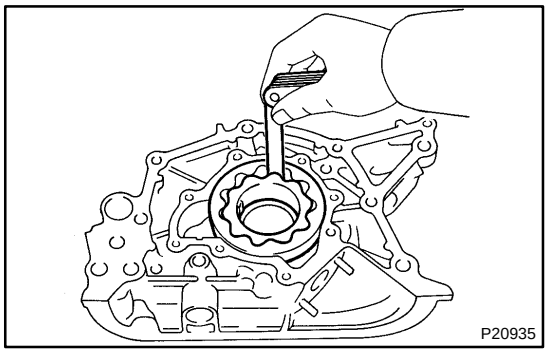

(b) Inspect the rotors for tip clearance.

Using a feeler gauge, measure the clearance between the drive and driven rotors.

Standard clearance:
0.11 – 0.24 mm (0.0043 – 0.0094 in.)
Maximum clearance: 0.35 mm (0.0138 in.)

If the clearance is greater than the maximum, replace the oil pump rotor set.

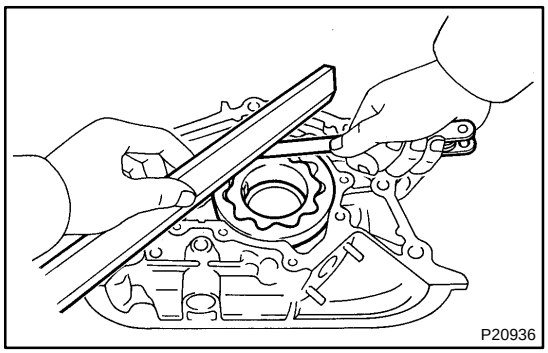

(c) Inspect the rotors for side clearance.

Using a feeler gauge and precision straight edge, measure the side clearance between the rotors and precision straight edge.

Standard clearance:
0.03 – 0.09 mm (0.0012 – 0.0035 in.)
Maximum clearance: 0.15 mm (0.0059 in.)

If the clearance is greater than the maximum, replace the oil pump rotor set and/or pump body.

LU01K–05

INSTALLATION

1. INSTALL OIL PUMP

(a) Remove any old packing (FIPG) material and be careful not to drop any oil on the contact surfaces of the oil pump and cylinder block.

- Using a razor blade and gasket scraper, remove all the old packing (FIPG) material from the gasket surfaces and sealing grooves.
- Thoroughly clean all components to remove all the loose material.
- Using a non–residue solvent, clean both sealing surfaces.

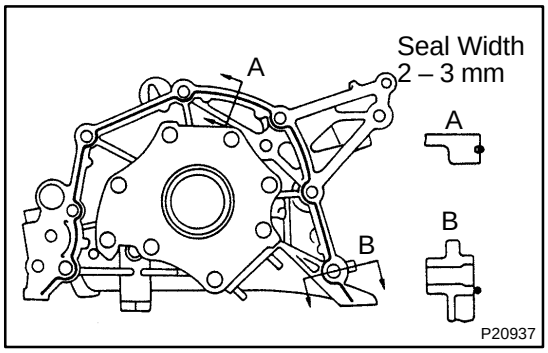

(b) Apply seal packing to the oil pump, as shown in the illustration.

Seal packing: Part No. 08826–00080 or equivalent

- Install nozzle that has been cut out to a 2 – 3 mm (0.08 – 0.12 in.) opening.

HINT:

Avoid applying an excessive amount to the surface.

- Parts must be assembled within 5 minutes of application. Otherwise the material must be removed and reapplied.
- Immediately remove nozzle from the tube and reinstall cap.

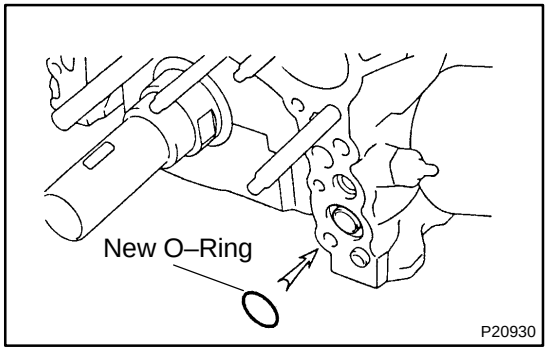

(c) Place a new O–ring into the groove of the cylinder block.

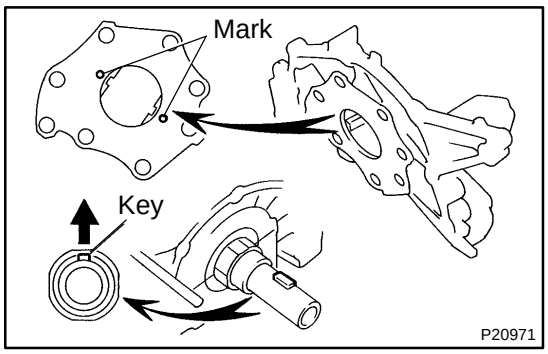

(d) Install the oil pump to the crankshaft with the spline teeth of the drive rotor engaged with the large teeth of the crankshaft.

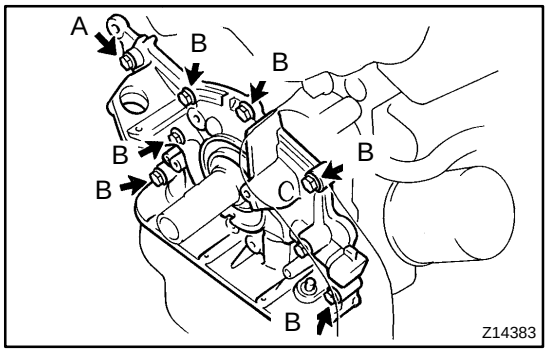

(e) Install the oil pump and ground strap with the 8 bolts.
Torque:
Bolt A: 20 N·m (200 kgf·cm, 15 ft·lbf)
Bolt B: 42 N·m (420 kgf·cm, 31 ft·lbf)

2. INSTALL CRANKSHAFT POSITION SENSOR

3. INSTALL OIL PAN BAFFLE PLATE

Install the baffle plate with the bolt and 2 nuts.
Torque: 7.5 N·m (76 kgf·cm, 66 in.·lbf)

4. INSTALL OIL STRAINER

Install a new gasket and the oil strainer with the 2 bolts and 2 nuts.
Torque: 7.5 N·m (76 kgf·cm, 66 in.·lbf)

5. INSTALL OIL PAN

(a) Remove any old packing (FIPG) material and be careful not to drop any oil on the contacting surfaces of the, oil pan, cylinder block and sealing grooves.
(1) Using a razor blade and gasket scraper, remove all the remaining seal packing (FIPG) material from the gasket surfaces.
(2) Thoroughly clean all components to remove all the loose material.
(3) Clean both sealing surfaces with a non–residue solvent.

NOTICE:
Do not use a solvent which will affect the painted surfaces.

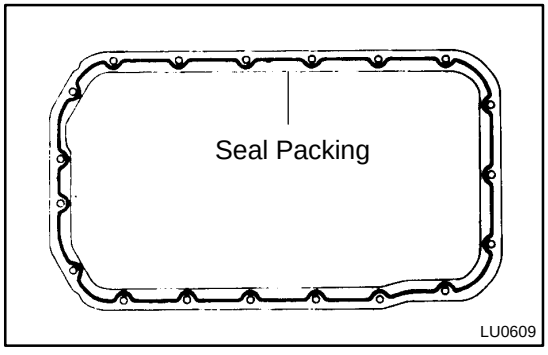

(b) Apply seal packing to the oil pan as shown in the illustration.
Seal packing: Part No. 08826–00080 or equivalent
(1) Install a nozzle that has been cut to a 3 – 4 mm (0.12 – 0.16 in.) opening.

HINT:
Avoid applying an excess amount to the surface.

(2) If parts are not assembled within 5 minutes of applying the seal packing, the effectiveness of the seal packing is lost and the seal packing must be removed and reapplied.

(3) Immediately remove the nozzle from the tube and reinstall the cap after using the seal packing.

(c) Install the oil pan with the 4 nuts and 15 bolts.

Torque: 7.6 N·m (78 kgf·cm, 67 in.·lbf)

6. INSTALL FLYWHEEL HOUSING UNDER, COVER DUST AND STIFFENER PLATE

7. CONNECT STARTER WIRE CLAMP

8. A/T:
INSTALL OIL COOLER TUBE AND CLANP
(A340E: See page AT–27)
(A340F: See page AT–36)

9. INSTALL CRANKSHAFT TIMING PULLEY (See page EM–19)

10. 4WD:
INSTALL FRONT DIFFERENTIAL (See page SA–65)

11. FILL WITH ENGINE OIL

12. START ENGINE AND CHECK FOR LEAKS

13. INSTALL ENGINE UNDER COVER

14. RECHECK ENGINE OIL LEVEL

LU0IQ–01

REASSEMBLY

Reassembly is in the reverse order of disassembly (See page LU–10).

LU01F–04

REMOVAL

HINT:

When repairing the oil pump, the oil pan and strainer should be removed and cleaned.

1. **REMOVE CRANKSHAFT TIMING PULLEY**
   (See page EM–13)
2. **4WD:**
   REMOVE FRONT DIFFERENTIAL (See page SA–47)
3. **DRAIN ENGINE OIL**
4. **A/T:**
   REMOVE OIL COOLER TUBE AND CLAMP
   (A340E: See page AT–24)
   (A340F: See page AT–30)
5. **REMOVE REAR END COVER AND DUST COVER**
6. **DISCONNECT STARTER WIRE CLAMP**
7. **REMOVE CRANKSHAFT POSITION SENSOR**

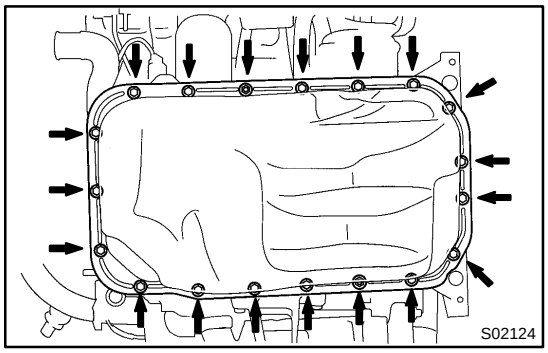

8. REMOVE OIL PAN

(a) Remove the 17 bolts and 2 nuts.

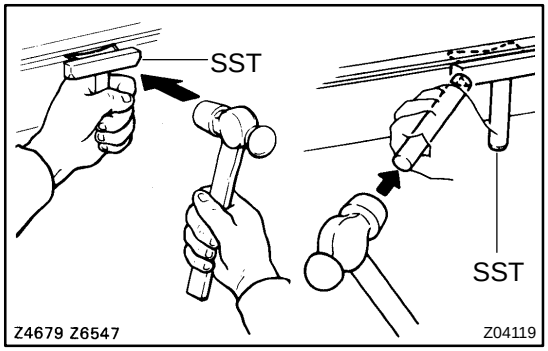

(b) Using SST and a brass bar, separate the oil pan from the cylinder block.
SST 09032–00100

HINT:

When removing the oil pan, be careful not to damage the oil pan flange.

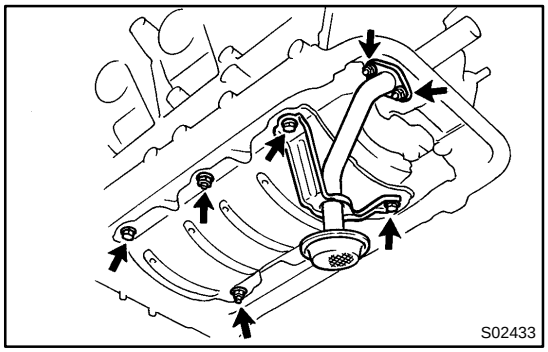

9. REMOVE OIL STRAINER

Remove the 2 bolt, 2 nuts and oil strainer and gasket.

10. REMOVE OIL PAN BAFFLE PLATE.

Remove the bolt, 2 nuts baffle plate.

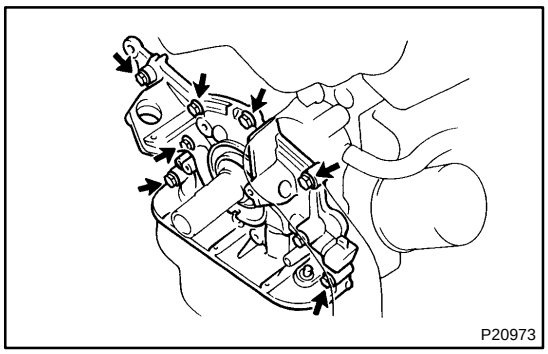

11. REMOVE OIL PUMP

(a) Remove the 8 bolts, ground strap and oil pump.

(b) Using a plastic–faced hammer, carefully tap out the oil pump body.

(c) Remove the O–ring from the cylinder block.

LU01I–04

REPLACEMENT

REPLACE CRANKSHAFT FRONT OIL SEAL

HINT:

There are 2 methods ((a) and (b)) to replace the oil seal.

(a) If oil pump is removed from cylinder block:

(1) Using a screwdriver, pry out the oil seal.

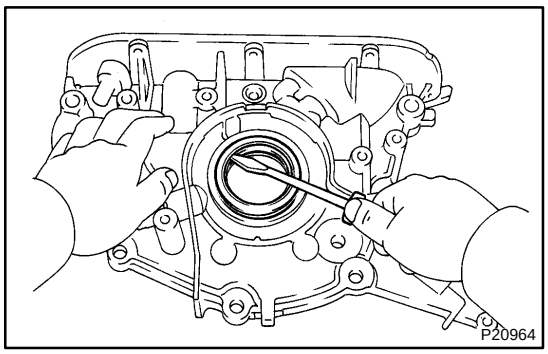

(2) Using SST and a hammer, tap in a new oil seal until its surface is flush with the oil pump body edge.

SST 09309–37010

(3) Apply MP grease to the oil seal lip.

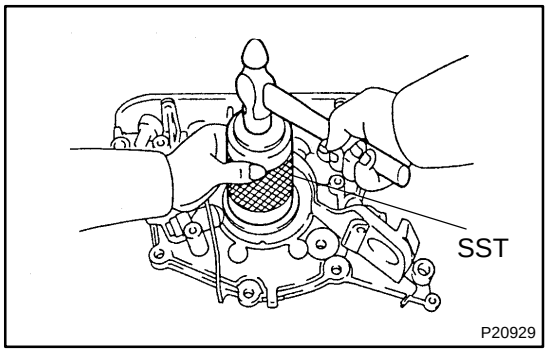

(b) If oil pump is installed to the cylinder block:

(1) Using a knife, cut off the oil seal lip.

(2) Using a screwdriver, pry out the oil seal.

NOTICE:

Be careful not to damage the crankshaft. Tape the screwdriver tip.

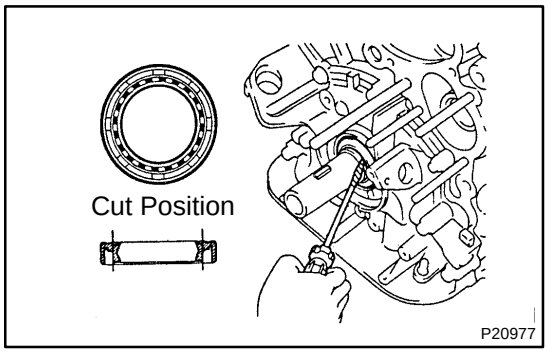

(3) Apply MP grease to a new oil seal lip.

(4) Using SST and a hammer, tap in the oil seal until its surface is flush with the oil pump body edge.

SST 09306–37010

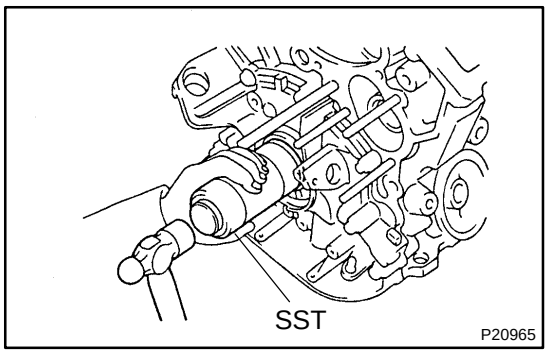

BODY

MA04H–02

INSPECTION

Canada:

TIGHTEN BOLTS AND NUTS ON CHASSIS AND BODY

(a) Where necessary, tighten all parts of the chassis.
- Front axle and suspension
- Drive train
- Rear axle and suspension
- Brake system
- Engine mounting, etc.

(b) Where necessary, tighten all parts of the body.
- Seat belt system
- Seats
- Doors and hood
- Body mountings
- Fuel tank
- Exhaust pipe system, etc.

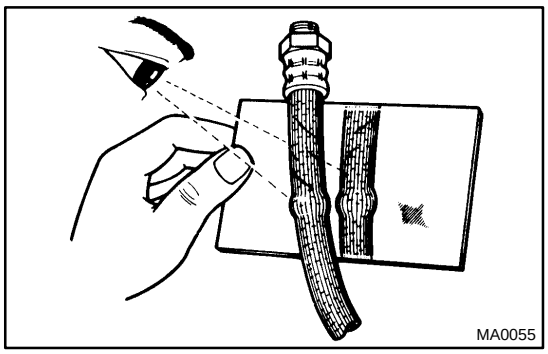

BRAKE

MA04L–01

INSPECTION

1. INSPECT BRAKE LINE PIPES AND HOSES

HINT:

Inspect in a well–lighted area. Inspect the entire circumference and length of the brake hoses using a mirror as required. Turn the front wheels fully right or left before inspecting the front brake.

(a) Check all brake lines and hoses.
- Check for damage.
- Check for wear.
- Check for deformation.
- Check for cracks.
- Check for corrosion.
- Check for leaks.
- Check for bends.
- Check for twists.

(b) Check all clamps for tightness and connections for leakage.

(c) Check that the hoses and lines are clear of sharp edges, moving parts and the exhaust system.

(d) Check that the lines installed in grommets pass through the center of the grommets.

2. INSPECT FRONT BRAKE PADS AND DISCS

(2WD: See page BR–27)

(4WD and PRE RUNNER: See page BR–33)

HINT:

If a squealing or scraping noise occurs from the brake during driving, check the pad wear indicator.

If there are traces of the indicator contacting the disc rotor, the disc pad should be replaced.

3. INSPECT REAR BRAKE LININGS AND DRUMS

(2WD: See page BR–39)

(4WD and PRE RUNNER: See page BR–44)

CHASSIS

MA04M–03

INSPECTION

1. INSPECT STEERING LINKAGE

(a) Check the steering wheel freeplay (See page SR–9).

(b) Check the steering linkage for looseness or damage.

- Check that the tie rod ends do not have excessive play.
- Check that the dust seals and boots are not damaged.
- Check that the boot clamps are not loose.

2. INSPECT STEERING GEAR HOUSING OIL

Check the steering gear housing for oil leaks.

If leakage is found, check for cause and repair.

3. INSPECT BALL JOINTS AND DUST COVERS

(a) Inspect the ball joints for excessive looseness.

(b) Inspect the dust cover for damage.

4. 4WD:

INSPECT DRIVE SHAFT BOOTS

Inspect the drive shaft boots for clamp looseness, grease leakage or damage.

5. CHECK OIL LEVEL IN MANUAL TRANSMISSION, TRANSFER AND DIFFERENTIAL

Remove the filler plug and feel inside the hole with your finger. Check that the oil comes to within 5 mm (0.20 in.) of the bottom edge of the hole.

If the level is low, add oil until it begins to run out of the filler hole.

Transmission oil (2WD for R150, R150F): See page MT–6.
Transmission oil (4WD for R150, R150F): See page MT–11.
Transmission oil (2WD for W59): See page MT–7.
Transmission oil (4WD for W59): See page MT–12.
Transfer oil: See page TR–9.
Front differential oil (4WD): See page SA–65.
Rear differential oil (2RZ–FE): See page SA–157.
Rear differential oil (3RZ–FE, 5VZ–FE w/o Diff. lock): See page SA–175.
Rear differential oil (3RZ–FE, 5VZ–FE w/ Diff. lock): See page SA–196.

6. REPLACE MANUAL TRANSMISSION, TRANSFER AND DIFFERENTIAL OIL

(a) Remove the drain plug and drain the oil.

(b) Reinstall drain plug securely.

(c) Add new oil until it begins to run out of the filler hole.

Transmission oil (2WD for R150, R150F): See page MT–6.
Transmission oil (4WD for R150, R150F): See page MT–11.
Transmission oil (2WD for W59): See page MT–7.
Transmission oil (4WD for W59): See page MT–12.
Transfer oil: See page TR–9.
Front differential oil (4WD): See page SA–65.
Rear differential oil (2RZ–FE): See page SA–157.
Rear differential oil (3RZ–FE, 5VZ–FE w/o Diff. lock): See page SA–175.
Rear differential oil (3RZ–FE, 5VZ–FE w/ Diff. lock): See page SA–196.

7. CHECK FLUID LEVEL IN AUTOMATIC TRANSMISSION (See page DI–456)

8. REPLACE AUTOMATIC TRANSMISSION FLUID (See page DI–456)

9. LUBRICATE PROPELLER SHAFT AND TIGHTEN BOLTS

(a) 4WD:

Lubricate propeller shaft, referring to the lubrication chart. Before pumping in grease, wipe off any mud and dust on the grease fitting.

Grease grade:

Spider: Lithium base chassis grease NLGI No. 2

Slide yoke and double–cardan joint:

Molybdenum disulphide lithium base chassis grease NLGI No. 2

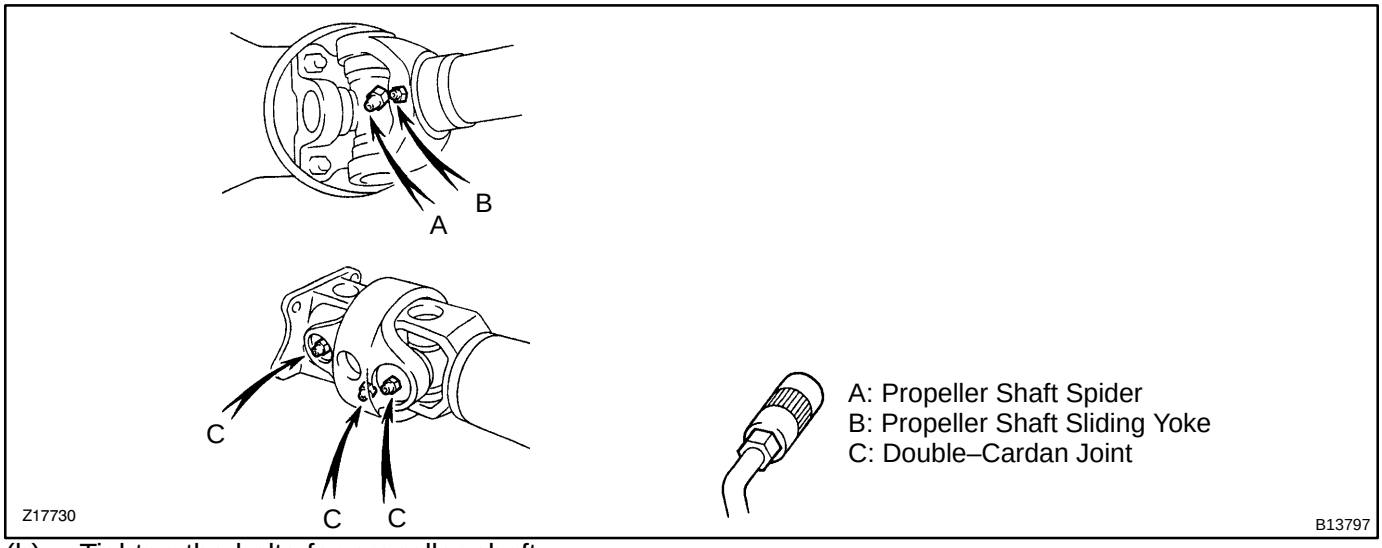

(b) Tighten the bolts for propeller shaft.

(2WD: See page PR–8)

(4WD and PRE RUNNER: See page PR–16)

10. ROTATE TIRES (See page SA–4)

ENGINE

MA00B–08

INSPECTION

HINT:

Inspect these items when the engine is cold.

1. 5VZ–FE:
REPLACE TIMING BELT (See pages EM–13 and EM–19)

2. INSPECT VALVE CLEARANCE
(2RZ–FE, 3RZ–FE: See page EM–5)
(5VZ–FE: See page EM–4)

3. INSPECT DRIVE BELTS
(2RZ–FE, 3RZ–FE: See pages CH–1, SR–3 and AC–16)
(5VZ–FE: See pages CH–1, SR–3 and AC–16)

4. REPLACE ENGINE OIL AND OIL FILTER
(2RZ–FE, 3RZ–FE: See page LU–2)
(5VZ–FE: See page LU–2)

5. REPLACE ENGINE COOLANT
(2RZ–FE, 3RZ–FE: See page CO–1)
(5VZ–FE: See page CO–2)

6. INSPECT FINS FOR BLOCKAGE
(2RZ–FE, 3RZ–FE: See page CO–13)
(5VZ–FE: See page CO–13)

7. INSPECT EXHAUST PIPES AND MOUNTINGS

Visually inspect the pipes, hangers and connections for severe corrosion, leaks or damage.

8. INSPECT AIR FILTER

(a) Visually check that the air filter is not excessively dirty or oily.

HINT:

Oiliness may indicate a stuck PCV valve.

If necessary, replace the air filter.

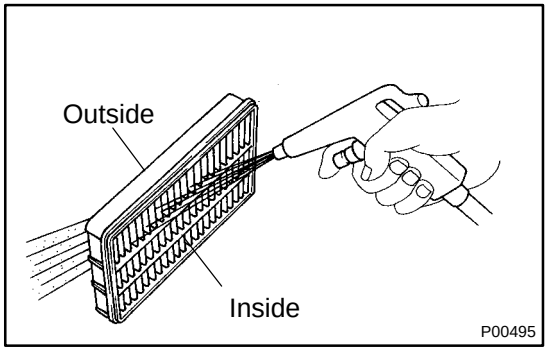

(b) Clean the air filter with compressed air.
First blow from the inside thoroughly, then blow off the outside of the air filter.

9. REPLACE AIR FILTER

Replace the air filter with a new one.

10. INSPECT FUEL LINES AND CONNECTIONS, AND FUEL TANK VAPOR VENT SYSTEM HOSES AND FUEL TANK BAND

Visually inspect the fuel lines for cracks, leakage loose connections, deformation or tank band looseness.

11. INSPECT GASKET IN FUEL TANK CAP
(2RZ–FE, 3RZ–FE: See page EC–8)
(5VZ–FE: See page EC–6)

12. REPLACE SPARK PLUGS
(2RZ–FE, 3RZ–FE: See page IG–1)
(5VZ–FE: See page IG–1)

INSIDE VEHICLE

MA009–02

GENERAL MAINTENANCE

The owners are responsible for these maintenance and inspection items.
They can be done by the owner or they can have them done at a service shop.
These items include those which should be checked on a daily basis, those which, in most cases, do not require (special) tools and those which are considered to be reasonable for the owner to do.
Items and procedures for general maintenance are as follows.

1. GENERAL NOTES

- Maintenance items may vary from country to country. Check the owner's manual supplement in which the maintenance schedule is shown.
- Every service item in the periodic maintenance schedule must be performed.
- Periodic maintenance service must be performed according to whichever interval in the periodic maintenance schedule occurs first, the odometer reading (miles) or the time interval (months).
- Maintenance service after the last period should be performed at the same interval as before unless otherwise noted.
- Failure to do even one item can cause the engine to run poorly and increase exhaust emissions.

2. LIGHTS

(a) Check that the headlights, stop lights, taillights, turn signal lights, and other lights are all working.
(b) Check the headlight aim.

3. WARNING LIGHTS AND BUZZERS

Check that all warning lights and buzzers function properly.

4. HORN

Check that it is working.

5. WINDSHIELD

Check for scratches, pits or abrasions.

6. WINDSHIELD WIPER AND WASHER

(a) Check operation of the wipers and washer.
(b) Check that the wipers do not streak.

7. WINDSHIELD DEFROSTER

Check that air comes out from the defroster outlet when operating the heater or air conditioner.

8. REAR VIEW MIRROR

Check that it is mounted securely.

9. SUN VISORS

Check that they move freely and are mounted securely.

10. STEERING WHEEL

Check that it has the specified freeplay. Be alert for changes in steering condition, such as hard steering, excessive freeplay or strange noises.

11. SEATS

(a) Check that the seat adjusters operate smoothly.
(b) Check that all latches lock securely in any position.
(c) Check that the head restraints move up and down smoothly and that the locks hold securely in any latch position.
(d) For fold–down seat backs, check that the latches lock securely.

12. SEAT BELTS

(a) Check that the seat belt system such as the buckles, retractors and anchors operate properly and smoothly.
(b) Check that the belt webbing is not cut, frayed, worn or dameged.

13. ACCELERATOR PEDAL

Check the pedal for smooth operation and uneven pedal effort or catching.

14. CLUTCH PEDAL (See page CL–2)

(a) Check the pedal for smooth operation.

(b) Check that the pedal has the proper freeplay.

15. BRAKE PEDAL

(a) Check the pedal for smooth operation.

(b) Check that the pedal has the proper reserve distance and freeplay.

(c) Check the brake booster function.

16. BRAKES

At a safe place, check that the brakes do not pull to one side when applied.

17. PARKING BRAKE

(a) Check that the lever has the proper travel.

(b) On a safe incline, check that the vehicle is held securely with only the parking brake applied.

18. AUTOMATIC TRANSMISSION "PARK" MECHANISM

(a) Check the lock release button of the selector lever for proper and smooth operation.

(b) On a safe incline, check that the vehicle is held securely with the selector lever in the P position and all brakes released.

OUTSIDE VEHICLE

MA008–01

GENERAL MAINTENANCE

The owners are responsible for these maintenance and inspection items.
They can be done by the owner or they can have them done at a service shop.
These items include those which should be checked on a daily basis, those which, in most cases, do not require (special) tools and those which are considered to be reasonable for the owner to do.
Items and procedures for general maintenance are as follows.

1. GENERAL NOTES

- Maintenance items may vary from country to country. Check the owner's manual supplement in which the maintenance schedule is shown.
- Every service item in the periodic maintenance schedule must be performed.
- Periodic maintenance service must be performed according to whichever interval in the periodic maintenance schedule occurs first, the odometer reading (miles) or the time interval (months).
- Maintenance service after the last period should be performed at the same interval as before unless otherwise noted.
- Failure to do even one item can cause the engine to run poorly and increase exhaust emissions.

2. TIRES

(a) Check the pressure with a gauge.
If necessary, adjust.
(b) Check for cuts, damage or excessive wear.

3. WHEEL NUTS

When checking the tires, check the nuts for looseness or for missing nuts.
If necessary, tighten them.

4. TIRE ROTATION

Check the owner's manual supplement in which the maintenance schedule is shown.

5. WINDSHIELD WIPER BLADES

Check for wear or cracks whenever they do not wipe clean.
If necessary, replace.

6. FLUID LEAKS

(a) Check underneath for leaking fuel, oil, water or other fluid.
(b) If you smell gasoline fumes or notice any leak, have the cause found and corrected.

7. DOORS AND ENGINE HOOD

(a) Check that all doors and the tailgate operate smoothly, and that all latches lock securely.
(b) Check that the engine hood secondary latch secures the hood from opening when the primary latch is released.

UNDER HOOD

MA00A–01

GENERAL MAINTENANCE

1. GENERAL NOTES

- Maintenance items may vary from country to country. Check the owner's manual supplement in which the maintenance schedule is shown.
- Every service item in the periodic maintenance schedule must be performed.
- Periodic maintenance service must be performed according to whichever interval in the periodic maintenance schedule occurs first, the odometer reading (miles) or the time interval (months).
- Maintenance service after the last period should be performed at the same interval as before unless otherwise noted.
- Failure to do even one item can cause the engine to run poorly and increase exhaust emissions.

2. WINDSHIELD WASHER FLUID

Check that there is sufficient fluid in the tank.

3. ENGINE COOLANT LEVEL

Check that the coolant level is between the FULL and LOW lines on the see–through reservoir.

4. RADIATOR AND HOSES

(a) Check that the front of the radiator is clean and not blocked with leaves, dirt or bugs.
(b) Check the hoses for cracks, kinks, rot or loose connections.

5. BATTERY ELECTROLYTE LEVEL

Check that the electrolyte level of all battery cells is between the upper and lower level lines on the case.

6. BRAKE AND CLUTCH FLUID LEVELS

Check that the brake and clutch fluid levels are near the upper level line on the see–through reservoirs.

7. ENGINE DRIVE BELTS

Check all drive belts for fraying, cracks, wear or oiliness.

8. ENGINE OIL LEVEL

Check the level on the dipstick with the engine turned off.

9. POWER STEERING FLUID LEVEL

(a) Check the level on the dipstick.
(b) The level should be in the HOT or COLD range depending on the fluid temperature.

10. AUTOMATIC TRANSMISSION FLUID LEVEL

(a) Park the vehicle on a level surface.
(b) With the engine idling and the parking brake applied, shift the selector into all positions from the P to L, and then shift into the P position.
(c) Pull out the dipstick and wipe off the fluid with a clean rag. Reinsert the dipstick and check that the fluid level is in the HOT range.
(d) Do this check with the fluid at normal driving temperature (70 – 80˚C, 158 – 176˚F).

HINT:

Wait until the engine cools down (approx. 30 min.) before checking the fluid level after extended driving at high speeds, in hot weather, in heavy traffic or pulling a trailer.

11. EXHAUST SYSTEM

If any change in the sound of the exhaust or smell of the exhaust fumes is noticed, have the cause located and corrected.

COUNTER GEAR AND REVERSE IDLER GEAR

MT037–01

COMPONENTS

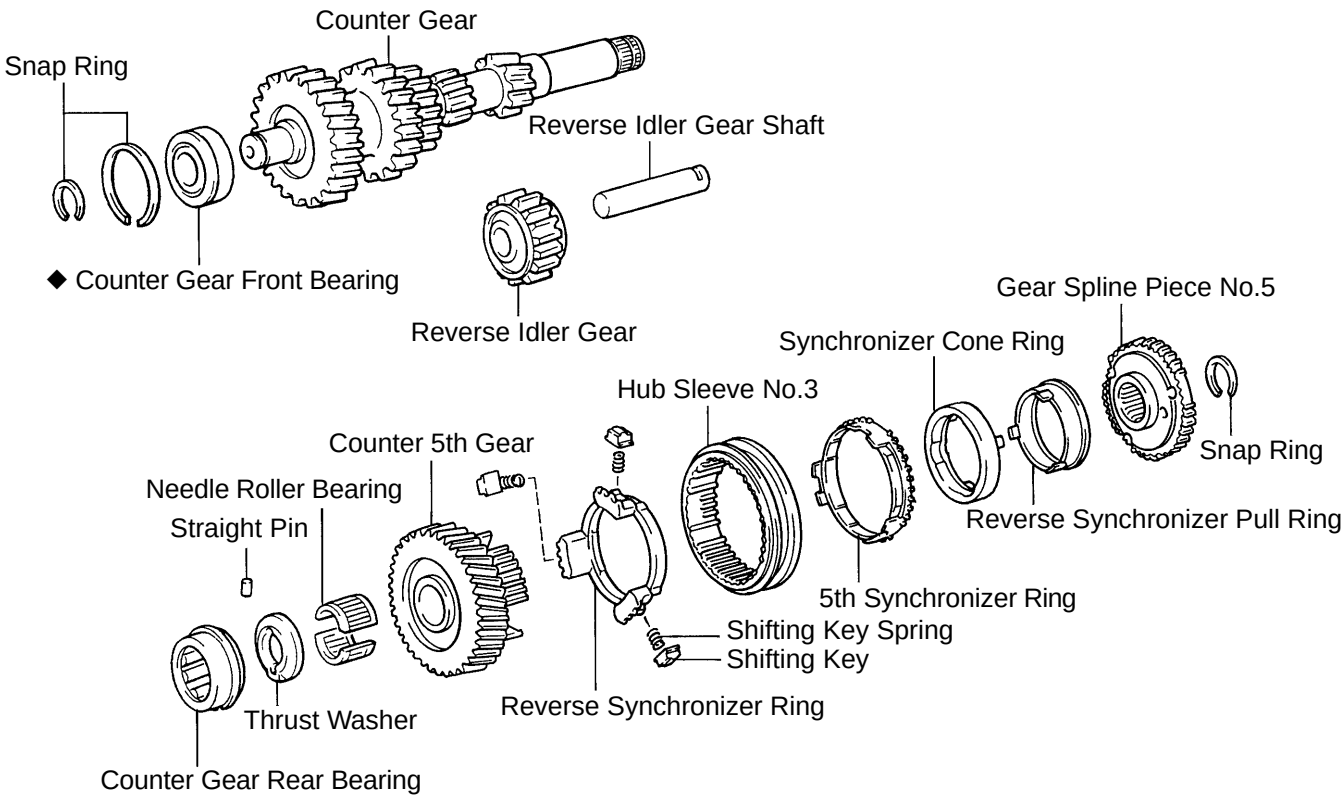

MT038–01

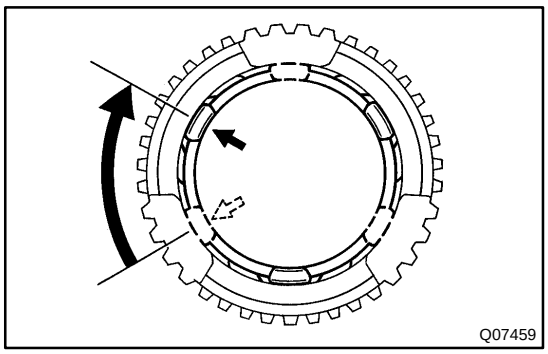

DISASSEMBLY

REMOVE HUB SLEEVE NO.3, SHIFTING KEY AND SPRING FROM SYNCHRONIZER RING

(a) Remove the synchronizer ring assembly from the hub sleeve No.3.

(b) Turn the reverse synchronizer pull ring.

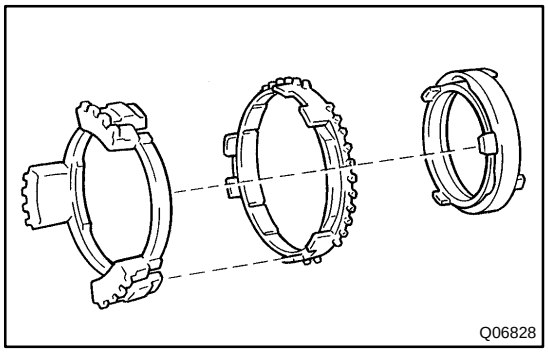

(c) Remove the reverse synchronizer ring and 5th synchronizer ring from the synchronizer pull ring and cone ring.

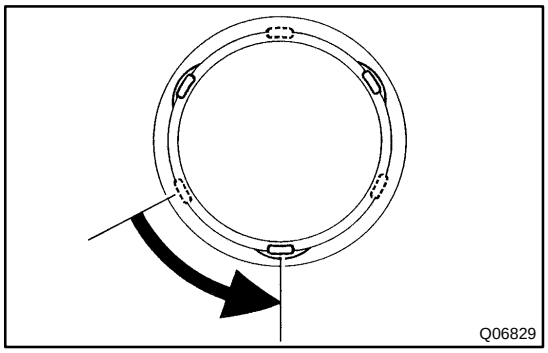

(d) Turn the reverse synchronizer pull ring, separate the pull ring and cone ring.

(e) Push the shifting key and spring, and remove the 3 shifting keys and springs to the reverse synchronizer ring.

MT039–01

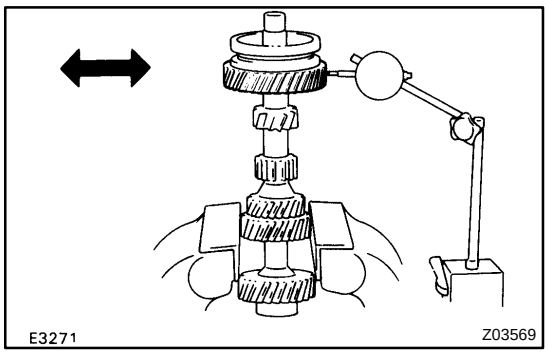

INSPECTION

1. INSPECT 5TH GEAR RADIAL CLEARANCE

(a) Install the spacer, counter 5th gear and needle roller bearings.

(b) Using a dial indicator, measure the counter 5th gear radial clearance.

Standard clearance:
0.015 – 0.068 mm (0.0006 – 0.0027 in.)
Maximum clearance:
0.160 mm (0.0063 in.)

If the clearance exceeds the maximum, replace the gear bearing or shaft.

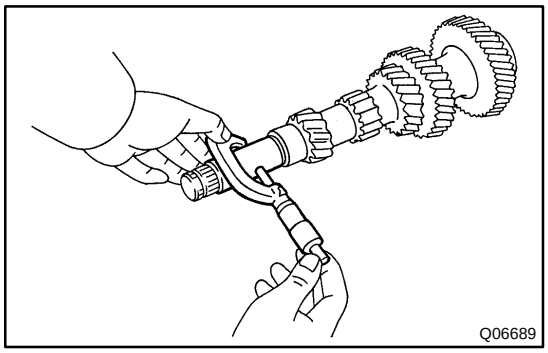

2. INSPECT COUNTER GEAR

Using a micrometer, measure the outer diameter of the counter gear journal.

Minimum diameter: 27.860 mm (1.0968 in.)

If the outer diameter is less than the minimum, replace the counter gear.

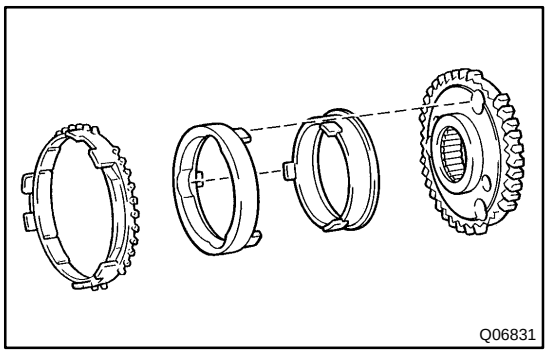

3. INSPECT 5TH SYNCHRONIZER RING

(a) Check for wear or damage.

(b) Install the synchronizer pull ring, cone ring and outer ring to the gear spline piece No.5.

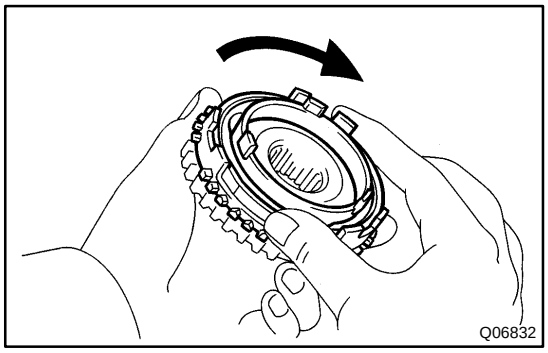

(c) Check the braking effect of the synchronizer ring. Turn the synchronizer ring in one direction while pushing it to the gear cone. Check that the ring locks.

If it does not lock, replace the synchronizer ring.

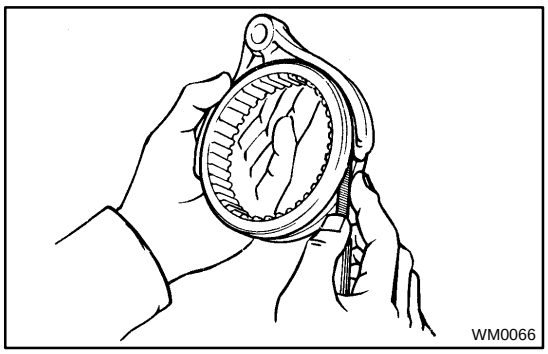
WM0066

4. INSPECT SHIFT FORK AND HUB SLEEVE CLEARANCE

Using a feeler gauge, measure the clearance between the hub sleeve and shift fork.

Maximum clearance: 1.0 mm (0.039 in.)

If the clearance exceeds the maximum, replace the shift fork or hub sleeve.

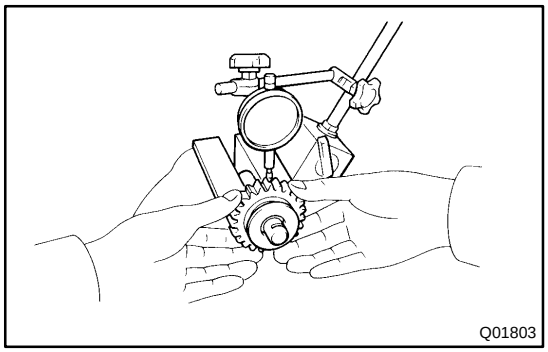
Q01803

5. INSPECT REVERSE IDLER GEAR RADIAL CLEARANCE

Using a dial indicator, measure the reverse idler gear radial clearance.

Standard clearance:
0.040 – 0.082 mm (0.0016 – 0.0032 in.)
Maximum clearance:
0.130 mm (0.0051 in.)

If the clearance exceeds the maximum, replace the reverse idler gear or reverse idler gear shaft.

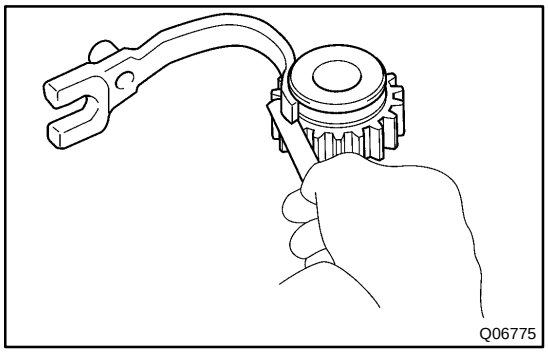
Q06775

6. INSPECT REVERSE IDLER GEAR AND SHIFT ARM CLEARANCE

Using a feeler gauge, measure the clearance between the reverse idler gear and shift arm.

Standard clearance:
0.05 – 0.35 mm (0.0020 – 0.0138 in.)
Maximum clearance:
0.50 mm (0.0197 in.)

If the clearance exceeds the maximum, replace the shift arm or reverse idler gear.

MT03B–01

REASSEMBLY

INSTALL SYNCHRONIZER RING ASSEMBLY TO HUB SLEEVE NO.3

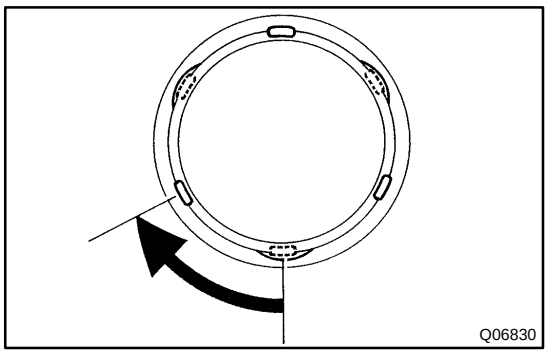

(a) Put the key spring to the hole of the shifting key.
(b) Push the 3 shifting keys with the 3 key springs to the reverse synchronizer ring.
(c) Install the synchronizer cone ring to the reverse synchronizer pull ring and turn the pull ring.

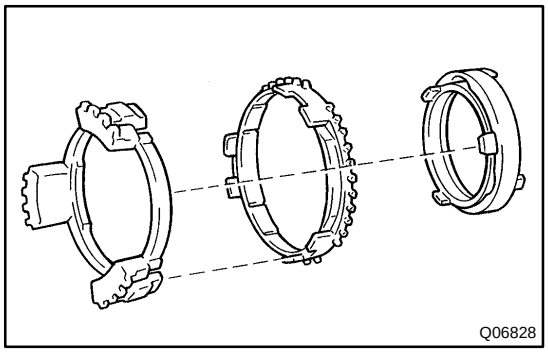

(d) Install the 5th synchronizer ring.
(e) Install the reverse synchronizer ring.

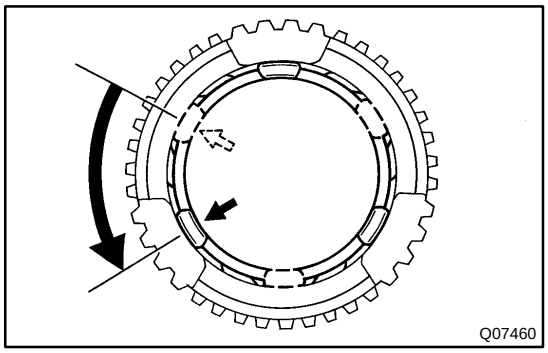

(f) Turn the reverse synchronizer pull ring.

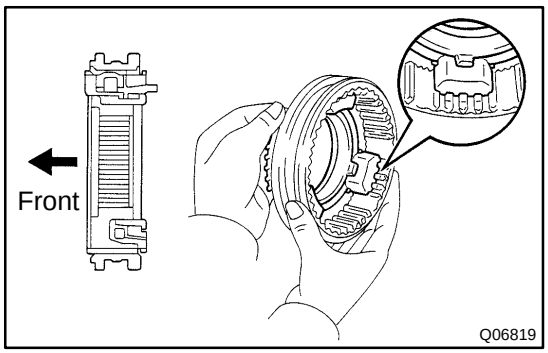

(g) While pushing the 3 shifting keys, install the synchronizer ring assembly to the hub sleeve No.3.

MT03A–01

REPLACEMENT

IF NECESSARY, REPLACE COUNTER GEAR FRONT BEARING

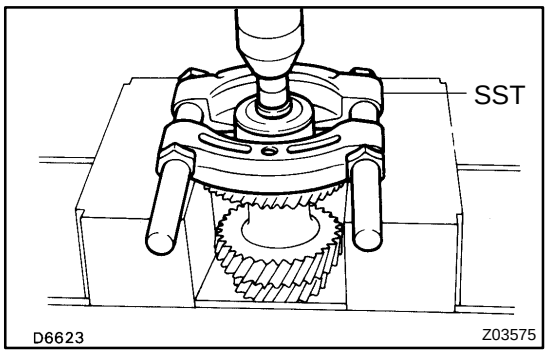

(a) Using a snap ring expander, remove the snap ring.

(b) Using SST and a press, remove the bearing.
SST 09950–00020

(c) Replace the side race.

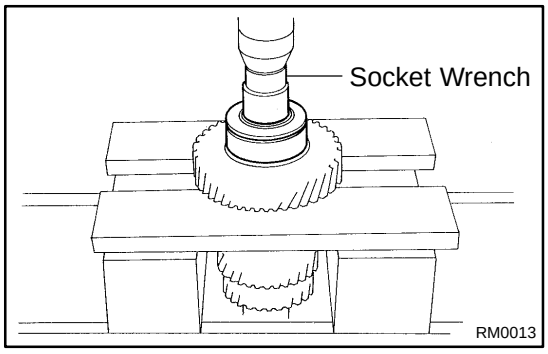

(d) Using a socket wrench and press, install a new bearing and side race.

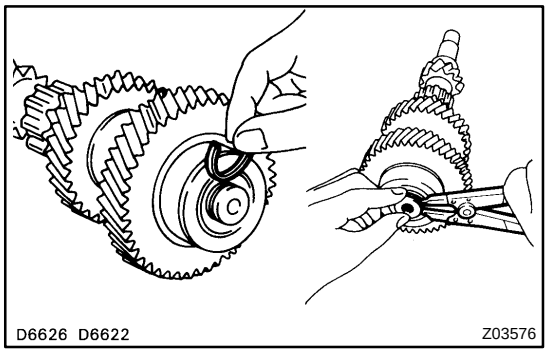

(e) Select a snap ring that allows the minimum axial play.

Mark	Thickness mm (in.)
A	2.00 – 2.05 (0.0787 – 0.0807)
B	2.05 – 2.10 (0.0807 – 0.0827)
C	2.10 – 2.15 (0.0827 – 0.0846)
D	2.15 – 2.20 (0.0846 – 0.0866)
E	2.20 – 2.25 (0.0866 – 0.0886)
F	2.25 – 2.30 (0.0886 – 0.0906)

(f) Using a snap ring expander, install the snap ring.

EXTENSION HOUSING AND TRANSFER ADAPTOR

MT03E–01

COMPONENTS

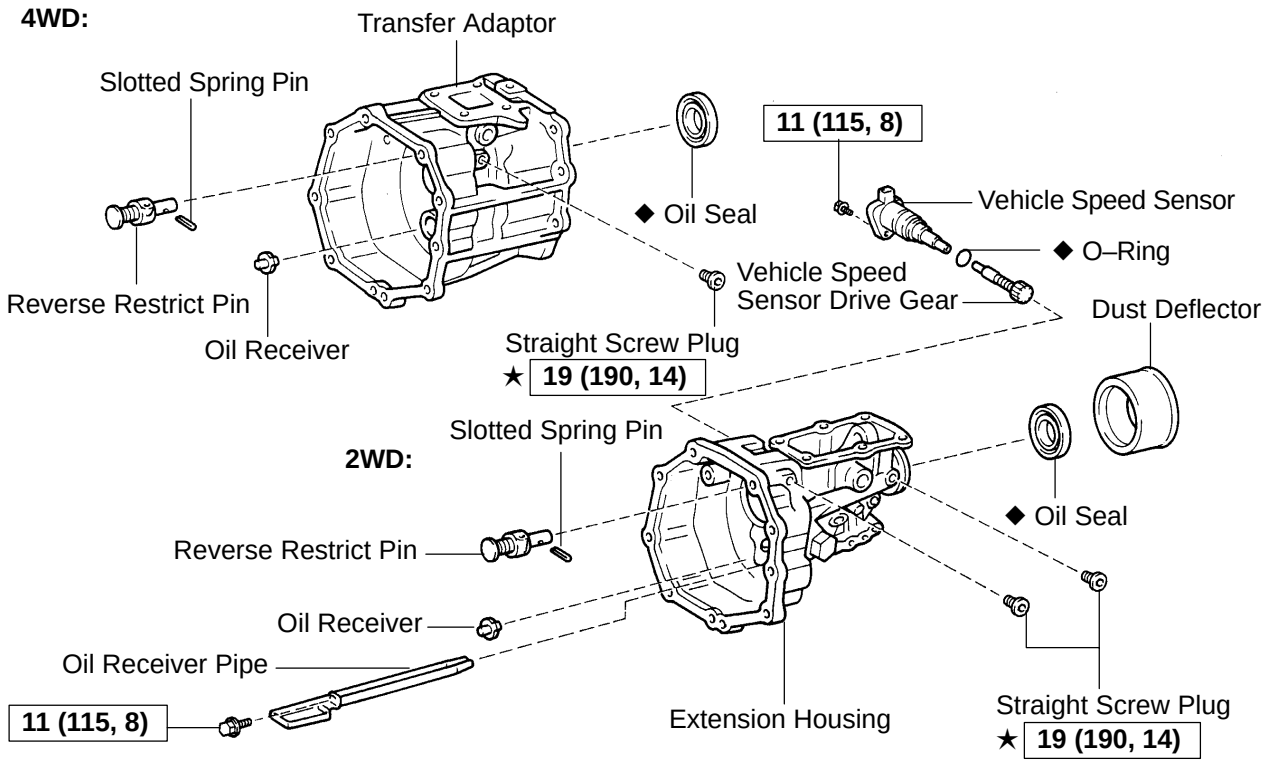

MT03F–01

REPLACEMENT

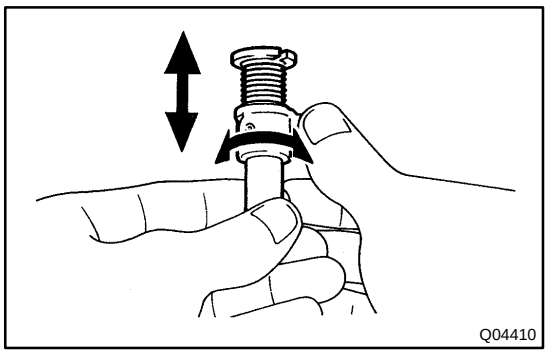

1. IF NECESSARY, REPLACE REVERSE RESTRICT PIN

(a) Remove the reverse restrict pin.
  (1) Using a torx socket wrench (T40), remove the screw plug.
  (2) Using a pin punch and hammer, drive out the slotted spring pin.
  (3) Remove the reverse restrict pin.

(b) Inspect the reverse restrict pin.
Turn and push the reverse restrict pin by hand. Check for smooth operation.

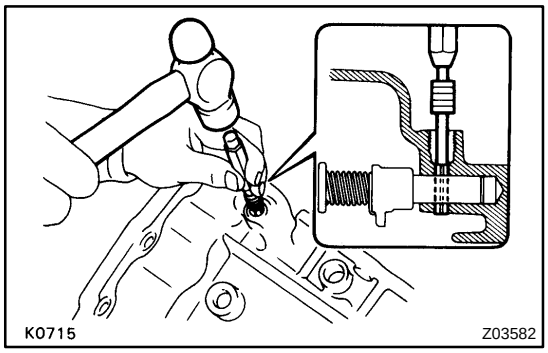

(c) Install the reverse restrict pin.
  (1) Install the reverse restrict pin to the extension housing or transfer adaptor.
  (2) Using a pin punch and hammer, drive in the slotted spring pin, as shown.
  (3) Apply sealant to the plug threads.

Sealant:
Part No.08833–00080, THREE BOND 1344, LOCTITE 242 or equivalent

  (4) Using a torx socket wrench (T40), install and torque the screw plug.

Torque: 19 N·m (190 kgf·cm, 14 ft·lbf)

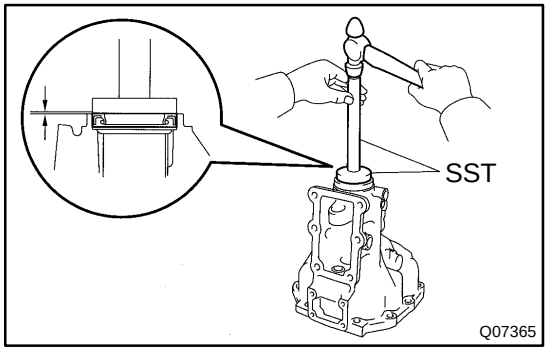

2. 2WD:
IF NECESSARY, REPLACE EXTENSION HOUSING OIL SEAL

(a) Remove the dust deflector.
(b) Using a screwdriver, pry out the oil seal.
(c) Using SST and a hammer, drive in a new oil seal.
SST 09950–60010 (09951–00570), 09950–70010 (09951–07150)

Drive in depth: 0 ± 0.5 mm (0 ± 0.020 in.)

(d) Install the deflector.

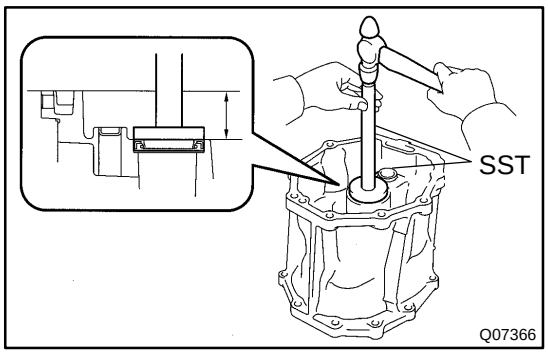

3. 4WD:

IF NECESSARY, REPLACE TRANSFER ADAPTOR OIL SEAL

(a) Using a screwdriver, pry out the oil seal.

(b) Using SST and a hammer, drive in a new oil seal.

SST 09950–60010 (09951–00570), 09950–70010 (09951–07150)

Drive in depth: 45.6 ± 0.5 mm (1.795 ± 0.020 in.)

FRONT BEARING RETAINER OIL SEAL

MT03C–01

COMPONENTS

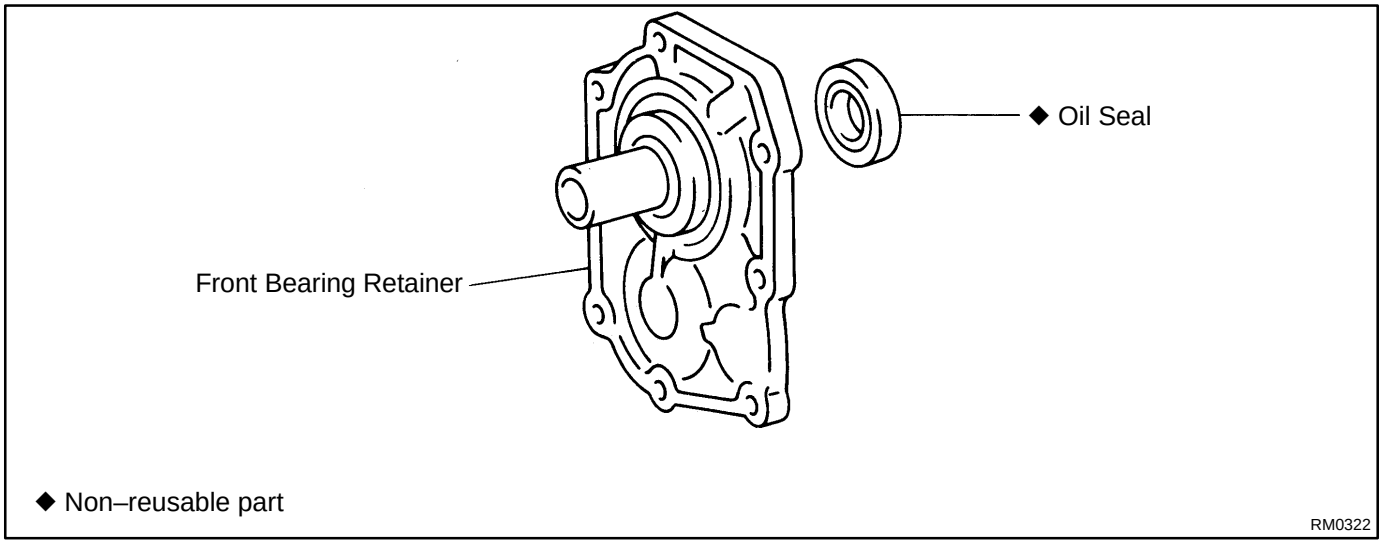

MT03D–01

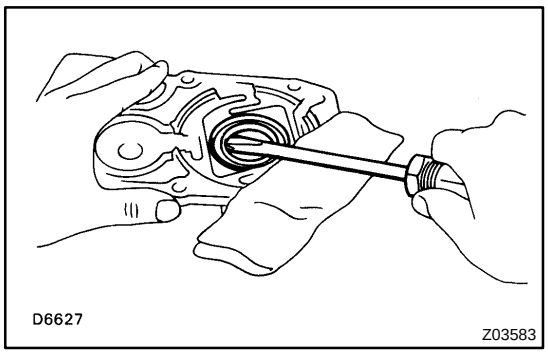

REPLACEMENT

IF NECESSARY, REPLACE FRONT BEARING RETAINER OIL SEAL

(a) Using a screwdriver, pry out the oil seal.

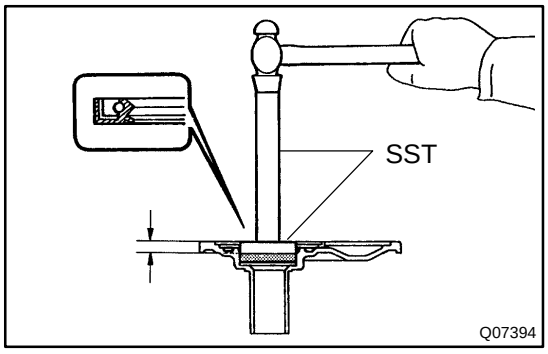

(b) Using SST and a hammer, drive in a new oil seal.
SST 09950–60010 (09951–00510), 09950–70010 (09951–07150)
Drive in depth: 11.7 ± 0.5 mm (0.461 ± 0.020 in.) from retainer end

INPUT SHAFT

COMPONENTS

MT030–01

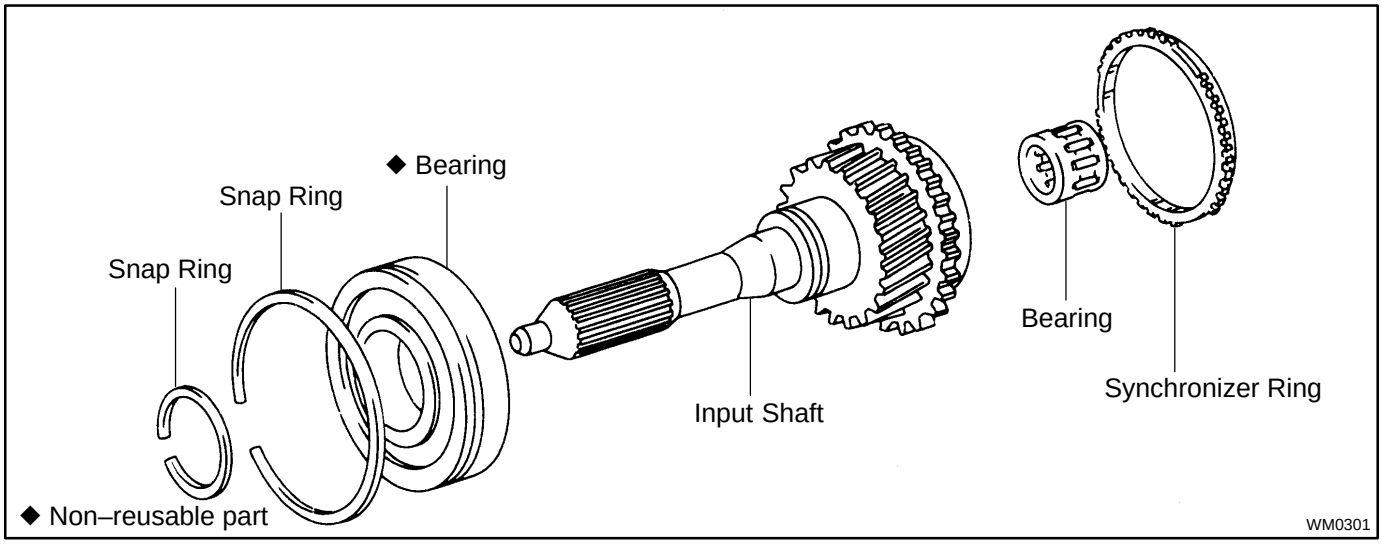

MT031–01

INSPECTION

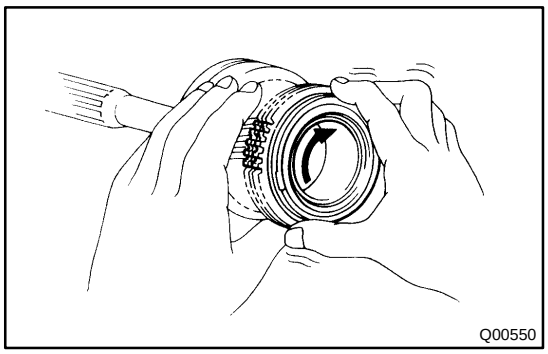

INSPECT SYNCHRONIZER RING

(a) Check for wear or damage.

(b) Check the braking effect of the synchronizer ring.
Turn the synchronizer ring in one direction while pushing it to the gear cone. Check that the ring locks.

If the braking effect is insufficient, apply a small amount of the fine lapping compound between the synchronizer ring and gear cone. Lightly rub the synchronizer ring and gear cone together.

NOTICE:

Ensure the fine lapping compound is completely washed off after rubbing.

(c) Check again the braking effect of the synchronizer ring.

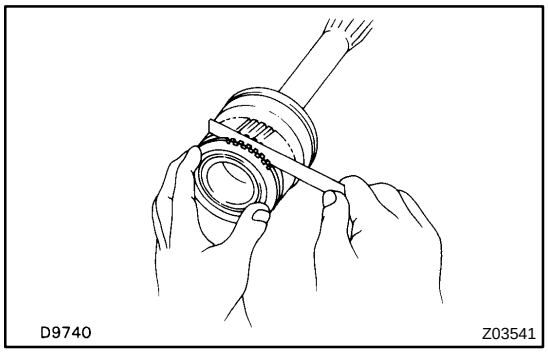

(d) Using a feeler gauge, measure the clearance between the synchronizer ring back and gear spline end.
Minimum clearance: 0.8 mm (0.031 in.)

If the clearance is less than the minimum, replace the synchronizer ring, and apply a small amount of the fine lapping compound on gear cone.

NOTICE:

Ensure the fine lapping compound is completely washed off after rubbing.

MT032–01

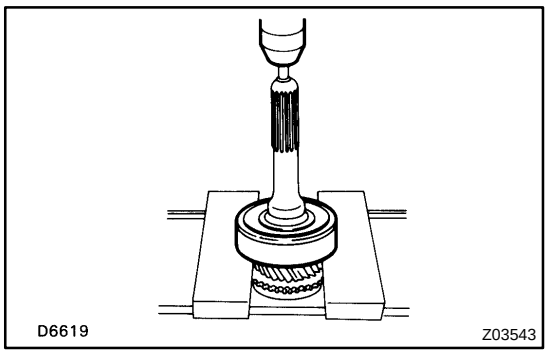

REPLACEMENT

IF NECESSARY, REPLACE INPUT SHAFT BEARING

(a) Using a snap ring expander, remove the snap ring.

(b) Using a press, remove the bearing.

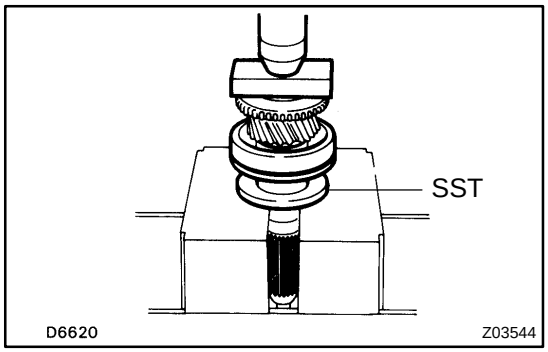

(c) Using SST and a press, install a new bearing.
SST 09506–35010

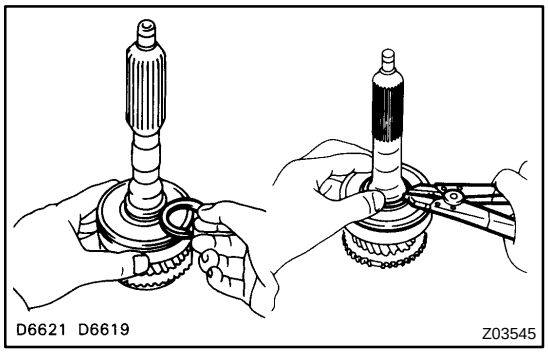

(d) Select a snap ring that allows the minimum axial play.

Mark	Thickness mm (in.)
A	2.10 – 2.15 (0.0827 – 0.0846)
B	2.15 – 2.20 (0.0846 – 0.0866)
C	2.20 – 2.25 (0.0866 – 0.0886)
D	2.25 – 2.30 (0.0886 – 0.0906)
E	2.30 – 2.35 (0.0906 – 0.0925)
F	2.35 – 2.40 (0.0925 – 0.0945)
G	2.40 – 2.45 (0.0945 – 0.0965)

(e) Using a snap ring expander, install the snap ring.

MANUAL TRANSMISSION ASSEMBLY

COMPONENTS

MT02X–01

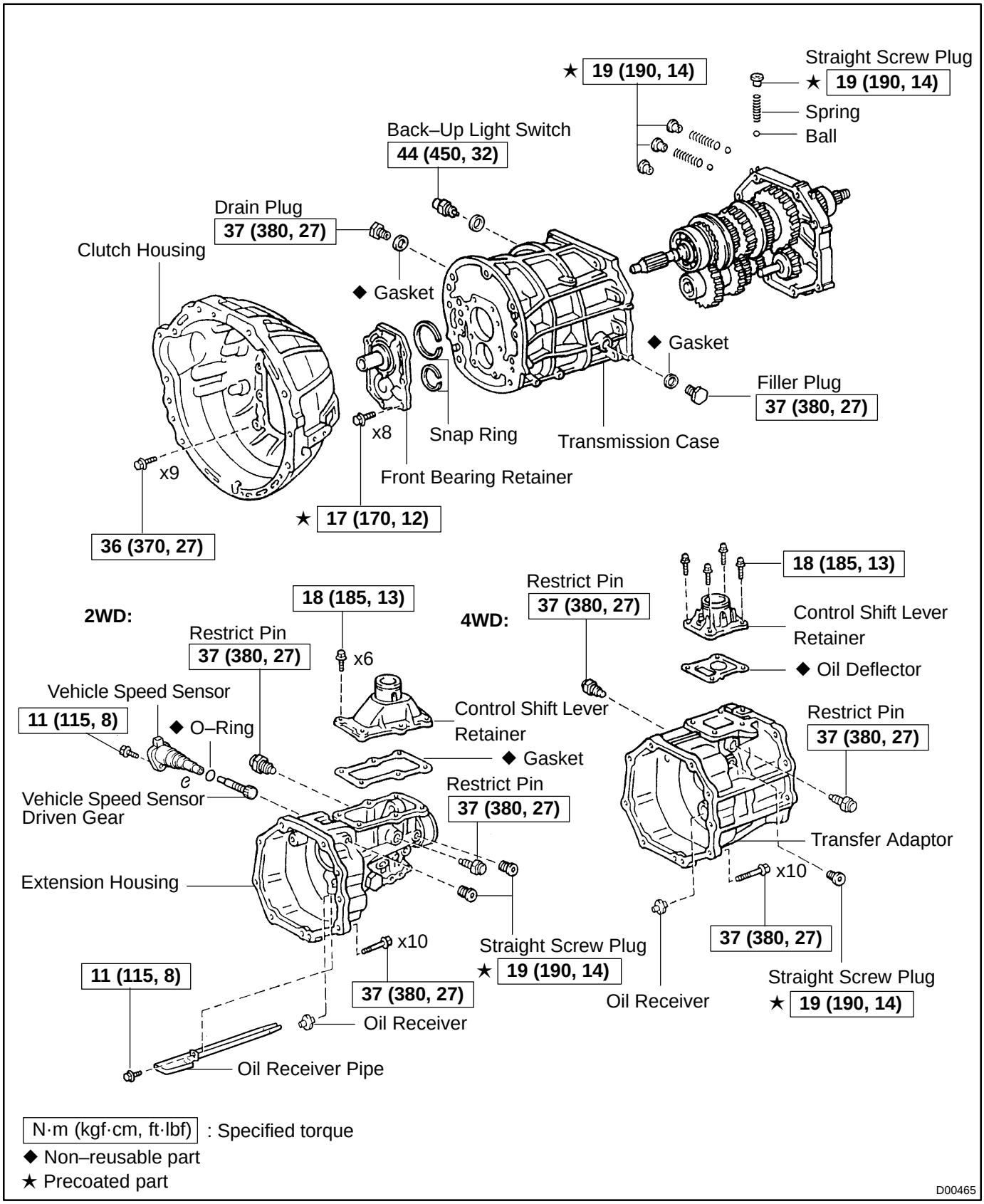

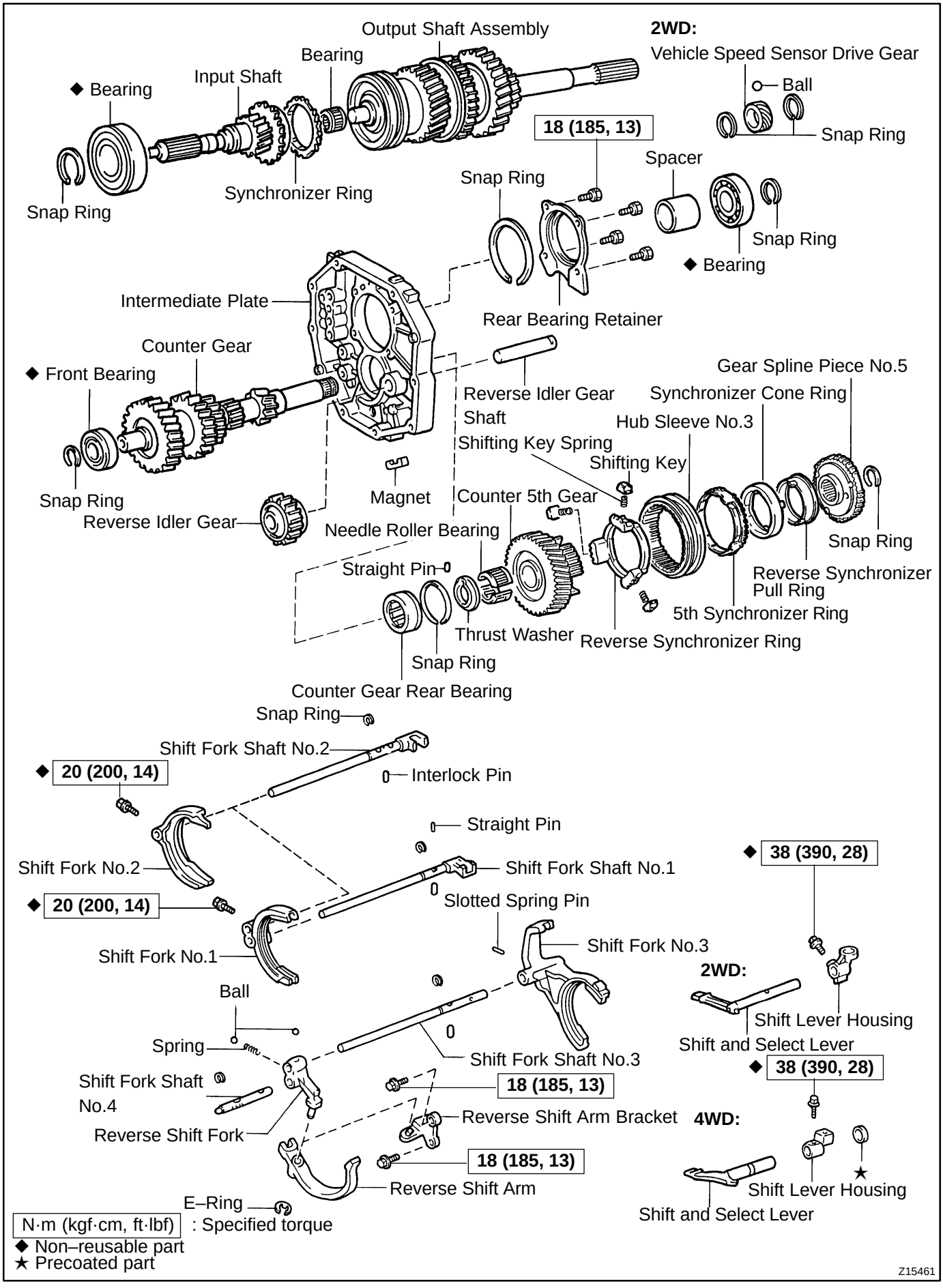
Output Shaft Assembly
Bearing
Input Shaft
◆ Bearing
Snap Ring
Synchronizer Ring
18 (185, 13)
2WD:
Vehicle Speed Sensor Drive Gear
Ball
Snap Ring
Spacer
Snap Ring
Snap Ring
◆ Bearing
Intermediate Plate
Rear Bearing Retainer
Counter Gear
◆ Front Bearing
Reverse Idler Gear
Shaft
Gear Spline Piece No.5
Synchronizer Cone Ring
Hub Sleeve No.3
Shifting Key Spring
Shifting Key
Snap Ring
Reverse Idler Gear
Magnet
Counter 5th Gear
Needle Roller Bearing
Straight Pin
Snap Ring
Reverse Synchronizer Pull Ring
5th Synchronizer Ring
Thrust Washer
Reverse Synchronizer Ring
Snap Ring
Counter Gear Rear Bearing
Snap Ring
Shift Fork Shaft No.2
◆ 20 (200, 14)
Interlock Pin
Straight Pin
Shift Fork No.2
Shift Fork Shaft No.1
◆ 38 (390, 28)
◆ 20 (200, 14)
Slotted Spring Pin
Shift Fork No.3
Shift Fork No.1
2WD:
Ball
Shift Lever Housing
Spring
Shift and Select Lever
Shift Fork Shaft No.3
◆ 38 (390, 28)
Shift Fork Shaft No.4
18 (185, 13)
Reverse Shift Arm Bracket
4WD:
Reverse Shift Fork
18 (185, 13)
Shift Lever Housing
Reverse Shift Arm
Shift and Select Lever
E–Ring
N·m (kgf·cm, ft·lbf) : Specified torque
◆ Non–reusable part
★ Precoated part
Z15461

MT02Y–04

DISASSEMBLY

1. REMOVE BACK–UP LIGHT SWITCH

Torque: 44 N·m (450 kgf·cm, 32 ft·lbf)

2. 2WD:

REMOVE VEHICLE SPEED SENSOR

Remove the bolt and vehicle speed sensor.

Torque: 11 N·m (115 kgf·cm, 8 ft·lbf)

3. REMOVE CLUTCH HOUSING FROM TRANSMISSION CASE

Remove the 9 bolts and clutch housing from the transmission case.

Torque: 36 N·m (370 kgf·cm, 27 ft·lbf)

4. REMOVE CONTROL SHIFT LEVER RETAINER

(a) Remove the 6 (2WD) or 4 (4WD) bolts.

Torque: 18 N·m (185 kgf·cm, 13 ft·lbf)

(b) Remove the retainer and gasket (2WD) or oil deflector (4WD).

5. REMOVE 2 RESTRICT PINS

Torque: 37 N·m (380 kgf·cm, 27 ft·lbf)

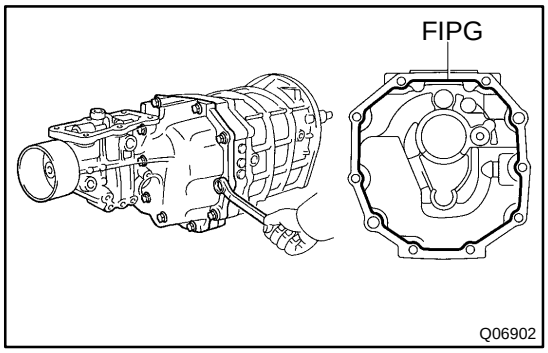

6. 2WD:

REMOVE EXTENSION HOUSING

(a) Remove the shift lever housing set bolt.

Torque: 38 N·m (390 kgf·cm, 28 ft·lbf)

(b) Remove the 10 bolts.

Torque: 37 N·m (380 kgf·cm, 27 ft·lbf)

(c) Using a plastic hammer, tap the extension housing, remove the shift lever housing and shift and select lever.

FIPG:

Part No. 08826–00090, THREE BOND 1281 or equivalent

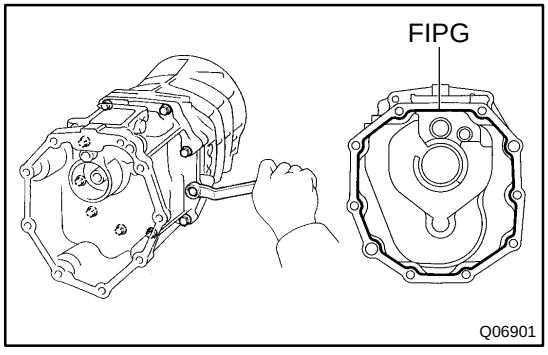

7. 4WD:

REMOVE TRANSFER ADAPTOR

(a) Remove the shift lever housing set bolt.

Torque: 38 N·m (390 kgf·cm, 28 ft·lbf)

(b) Remove the 10 bolts.

Torque: 37 N·m (380 kgf·cm, 27 ft·lbf)

(c) Using a plastic hammer, tap the transfer adaptor, remove the shift lever housing and the shift and select lever.

FIPG:
Part No. 08826–00090, THREE BOND 1281 or equivalent

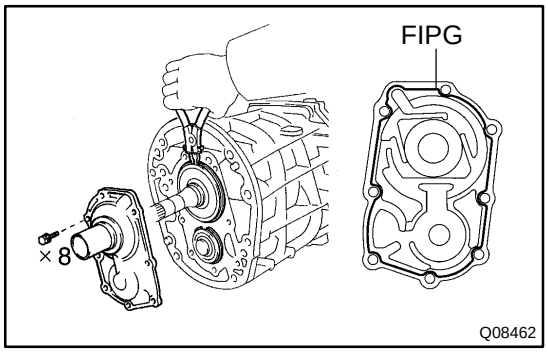

8. REMOVE FRONT BEARING RETAINER

(a) Remove the 8 bolts.
Sealant:
Part No.08833–00080, THREE BOND 1344, LOCTITE 242 or equivalent
Torque: 17 N·m (170 kgf·cm, 12 ft·lbf)

(b) Using a plastic hammer, tap the front bearing retainer.
FIPG:
Part No. 08826–00090, THREE BOND 1281 or equivalent

9. REMOVE BEARING SNAP RING

Using a snap ring expander, remove the 2 snap rings.

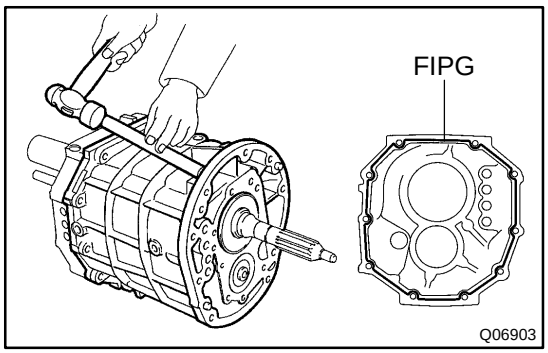

10. SEPARATE INTERMEDIATE PLATE FROM TRANSMISSION CASE

(a) Using a brass bar and hammer, carefully tap the transmission case.

(b) Remove the transmission case from the intermediate plate.

HINT:
At the time of reassembly, please refer to the following item.
Align the each bearing outer race, each fork shaft end and reverse idler gear shaft end with the case installation holes.
FIPG:
Part No. 08826–00090, THREE BOND 1281 or equivalent

11. REMOVE MAGNET FROM INTERMEDIATE PLATE

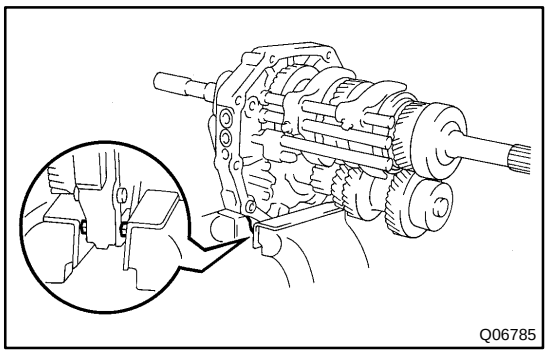

12. MOUNT INTERMEDIATE PLATE IN VISE

(a) Use the 2 clutch housing bolts, plate washers and suitable nuts, as shown.

HINT:

Increase or decrease plate washers so that the bolt tip does not protrude from the nut.

(b) Mount the intermediate plate in a vise.

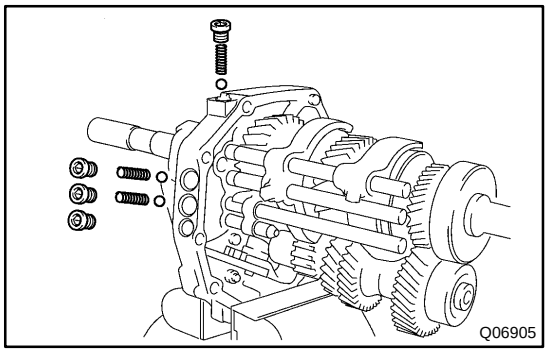

13. REMOVE STRAIGHT SCREW PLUG, LOCKING BALL AND SPRING

(a) Using a hexagon wrench, remove the 4 plugs.

Sealant:

Part No.08833–00080, THREE BOND 1344, LOCTITE 242 or equivalent

Torque: 19 N·m (190 kgf·cm, 14 ft·lbf)

(b) Using a magnetic finger, remove the 3 springs and balls.

14. REMOVE SHIFT FORK SET BOLT

Remove the 2 bolts from the shift forks No.1 and No.2.

Torque: 20 N·m (200 kgf·cm, 14 ft·lbf)

15. REMOVE SLOTTED SPRING PIN

Using a pin punch and hammer, drive out the pin from the shift fork No.3.

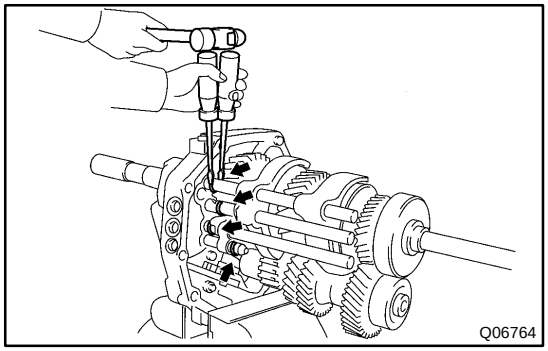

16. REMOVE SNAP RING

Using 2 screwdrivers and a hammer, tap out the 4 snap rings from each shift fork shaft.

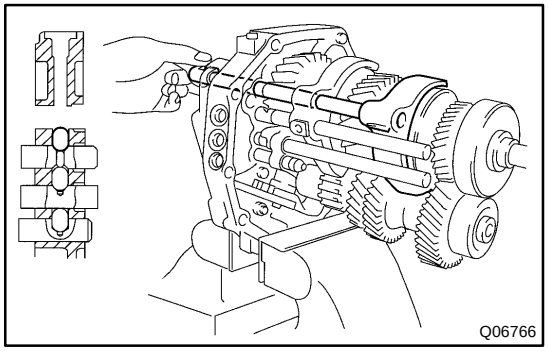

17. REMOVE SHIFT FORK SHAFT NO.2 AND SHIFT FORK NO.2

(a) Pull out the shift fork shaft No.2 from the shift forks No.1, No.2 and intermediate plate.

(b) Remove the shift fork No.2 from the groove of hub sleeve No.2.

(c) Using a magnetic finger, remove the interlock pin from the intermediate plate.

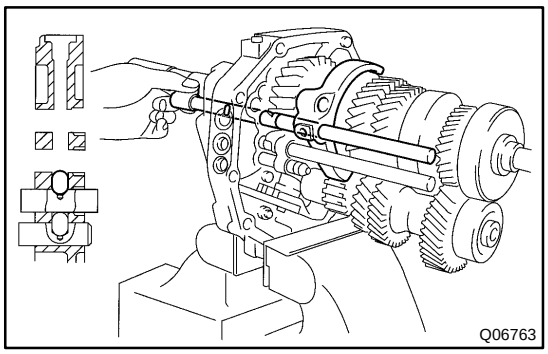

18. REMOVE SHIFT FORK SHAFT NO.1 AND SHIFT FORK NO.1

(a) Pull out the shift fork shaft No.1 with the straight pin from the shift fork No.1 and intermediate plate.

(b) Remove the shift fork No.1 from the groove of reverse gear.

(c) Using a magnetic finger, remove the interlock pin from the intermediate plate.

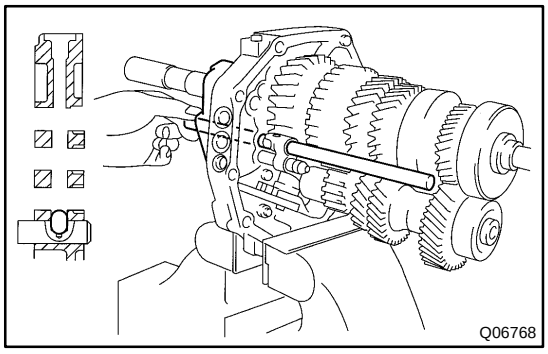

19. REMOVE SHIFT FORK SHAFT NO.3 AND SHIFT FORK NO.3

(a) Pull out the shift fork shaft No.3 from the shift fork No.3, reverse shift fork and intermediate plate.

(b) Remove the shift fork No.3 from the groove of hub sleeve No.3.

(c) Using a magnetic finger, remove the interlock pin from the intermediate plate.

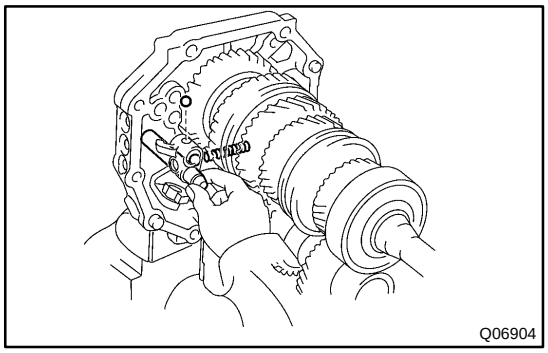

20. REMOVE SHIFT FORK SHAFT NO.4

(a) Using a magnetic finger, remove the ball.

(b) Pull out the shift fork shaft No.4 from the reverse shift fork and intermediate plate.

NOTICE:

Take care of the ball in the reverse shift fork. It will spring out when you pull out the shift fork shaft No.4.

(c) Using a magnetic finger, remove the spring from the reverse shift fork.

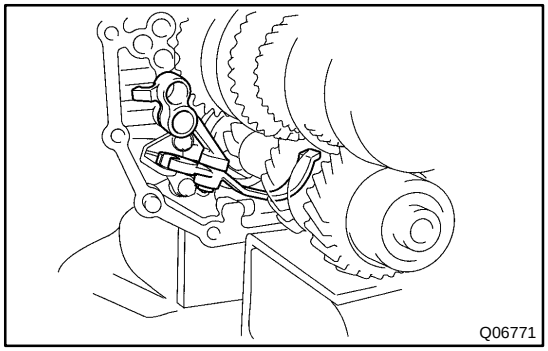

21. REMOVE REVERSE SHIFT FORK AND ARM

(a) Remove the reverse shift fork and arm.

HINT:

At the time of reassembly, please refer to the following item.

Align the reverse shift arm to the pivot of the reverse shift arm bracket.

(b) Using a screwdriver, remove the E–ring.

(c) Separate the reverse shift fork and arm.

22. REMOVE REVERSE SHIFT ARM BRACKET

Remove the 2 bolts and reverse shift arm bracket.

Torque: 18 N·m (185 kgf·cm, 13 ft·lbf)

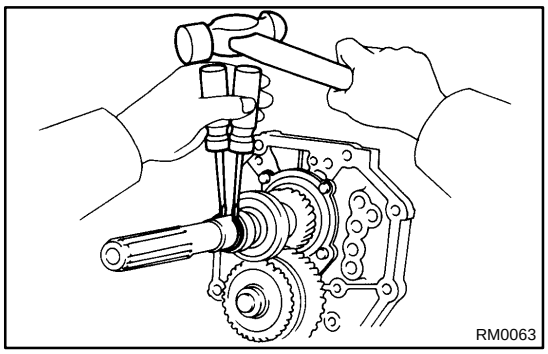

23. 2WD:
REMOVE VEHICLE SPEED SENSOR DRIVE GEAR

(a) Using 2 screwdrivers and a hammer, tap out the rear snap ring, and remove the drive gear and ball.

(b) Using 2 screwdrivers and a hammer, tap out the front snap ring, and remove the drive gear.

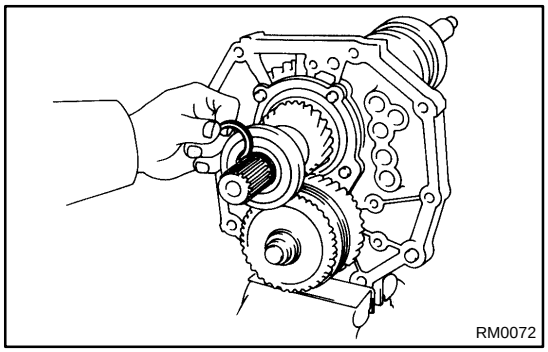

24. REMOVE OUTPUT SHAFT REAR BEARING

(a) Using 2 screwdrivers and a hammer, tap out the snap ring.

HINT:

At the time of reassembly, please refer to the following item.
Select a snap ring that allows the minimum axial play.

Mark	Thickness mm (in.)
A	2.65 – 2.70 (0.1043 – 0.1063)
B	2.70 – 2.75 (0.1063 – 0.1083)
C	2.75 – 2.80 (0.1083 – 0.1102)
D	2.80 – 2.85 (0.1102 – 0.1122)
E	2.85 – 2.90 (0.1122 – 0.1142)
F	2.90 – 2.95 (0.1142 – 0.1161)
G	2.95 – 3.00 (0.1161 – 0.1181)
H	3.00 – 3.05 (0.1181 – 0.1201)
J	3.05 – 3.10 (0.1201 – 0.1220)
K	3.10 – 3.15 (0.1220 – 0.1240)
L	3.15 – 3.20 (0.1240 – 0.1260)
M	3.20 – 3.25 (0.1260 – 0.1280)
N	3.25 – 3.30 (0.1280 – 0.1299)
P	3.30 – 3.35 (0.1299 – 0.1319)
Q	3.35 – 3.40 (0.1319 – 0.1339)
R	3.40 – 3.45 (0.1339 – 0.1358)
S	3.45 – 3.50 (0.1358 – 0.1378)

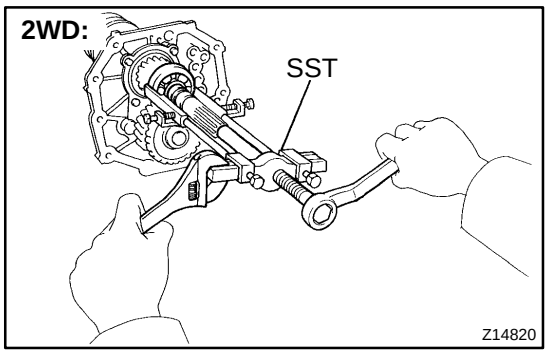

(b) Using SST, remove the rear bearing.
SST 09950–40011

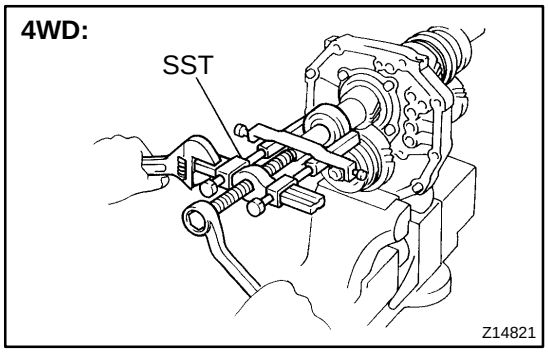

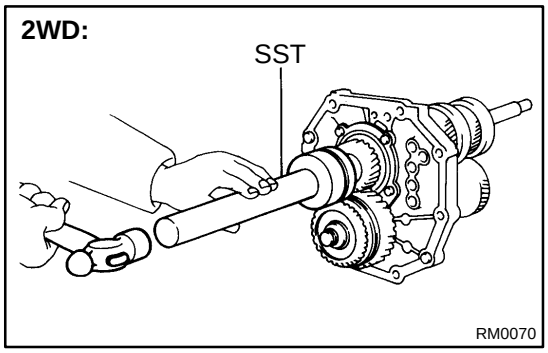

HINT:
At the time of reassembly, please refer to the following items.

- 2WD:
  Using SST and a hammer, drive in a new bearing.
  SST 09309–35010

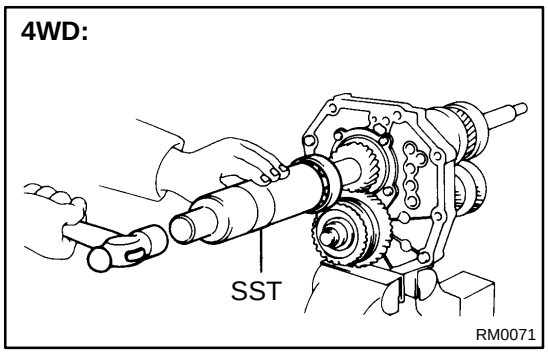

- 4WD:
  Using SST and a hammer, drive in a new bearing.
  SST 09316–60011 (09316–00011, 09316–00071)

25. REMOVE SPACER

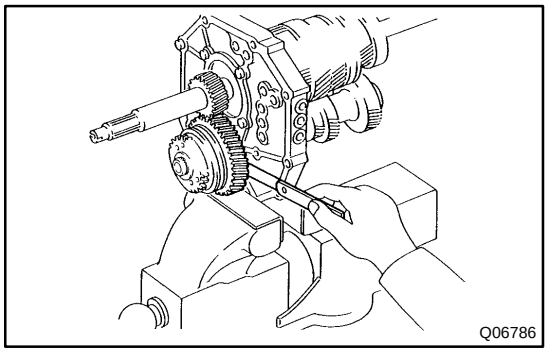

26. INSPECT COUNTER 5TH GEAR THRUST CLEARANCE

Using a feeler gauge, measure the counter 5th gear thrust clearance.

Standard clearance:
0.10 – 0.35 mm (0.0039 – 0.0138 in.)
Maximum clearance:
0.40 mm (0.0157 in.)

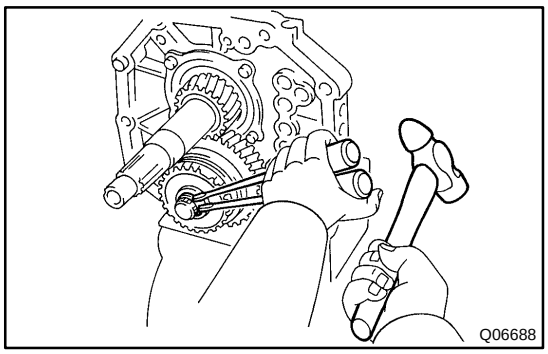

27. REMOVE GEAR SPLINE PIECE NO.5, SYNCHRONIZER RING, NEEDLE ROLLER BEARING AND COUNTER 5TH GEAR WITH HUB SLEEVE NO.3

(a) Using 2 screwdrivers and a hammer, tap out the snap ring.

HINT:

At the time of reassembly, please refer to the following item.

Select a snap ring that allows the minimum axial play.

Mark	Thickness mm (in.)
A	2.80 – 2.85 (0.1102 – 0.1122)
B	2.85 – 2.90 (0.1122 – 0.1142)
C	2.90 – 2.95 (0.1142 – 0.1161)
D	2.95 – 3.00 (0.1161 – 0.1181)
E	3.00 – 3.05 (0.1181 – 0.1201)
F	3.05 – 3.10 (0.1201 – 0.1220)
G	3.10 – 3.15 (0.1220 – 0.1240)

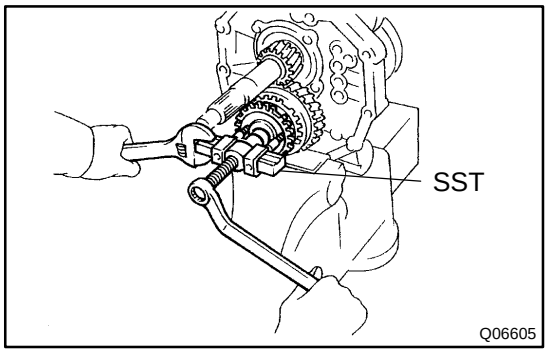

(b) Using SST, remove the gear spline piece No.5.
SST 09950–50013

(c) Remove the counter 5th gear with the hub sleeve No.3.

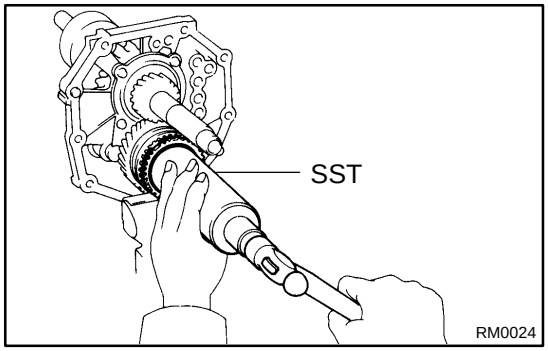

HINT:

At the time of reassembly, please refer to the following items.

- Using SST and a hammer, drive in the gear spline piece No.5 with the synchronizer ring slots aligned with the shifting keys.
  SST 09316–60011 (09316–00011)
- When installing the gear spline piece No.5, support the counter gear in front with a 1.4 – 2.3 kg (3 – 5 lb) hammer or equivalent.

28. REMOVE THRUST WASHER AND BALL FROM COUNTER GEAR

29. REMOVE REAR BEARING RETAINER

Remove the 4 bolts and rear bearing retainer.

HINT:

At the time of reassembly, please refer to the following item.

Align the rear bearing retainer to the reverse idler gear shaft groove.

Torque: 18 N·m (185 kgf·cm, 13 ft·lbf)

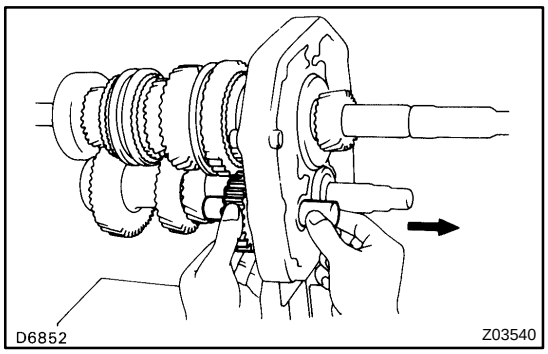

30. REMOVE REVERSE IDLER GEAR AND SHAFT

Pull out the shaft toward the rear.

HINT:

At the time of reassembly, please refer to the following item.

Align the reverse shift arm to the reverse idler gear shaft.

31. REMOVE OUTPUT SHAFT CENTER BEARING SNAP RING

Using a snap ring expander, remove the snap ring.

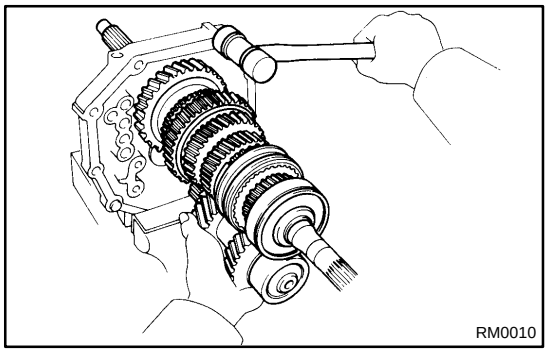

32. REMOVE OUTPUT SHAFT AND COUNTER GEAR FROM INTERMEDIATE PLATE

(a) Remove the output shaft, counter gear and input shaft as a unit from the intermediate plate by pulling on the counter gear and tapping on the intermediate plate with a plastic hammer.

(b) Remove the input shaft with the needle roller bearing from the output shaft.

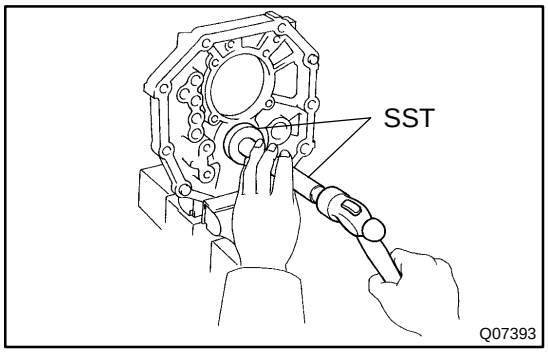

33. REMOVE COUNTER REAR BEARING FROM INTERMEDIATE PLATE

Using SST and a hammer, remove the counter rear bearing.

SST 09950–60010 (09951–00620), 09950–70010 (09951–07150)

MT02Z–01

REASSEMBLY

Reassembly is in the reverse order of disassembly. (See page MT–14)

HINT:

Coat all of the sliding and rotating surfaces with gear oil before reassembly.

MANUAL TRANSMISSION SYSTEM

MT02P–01

PRECAUTION

When working with FIPG material, you must observe the following items.

- **Using a razor blade and gasket scraper, remove all the old FIPG material from the gasket surfaces.**
- **Thoroughly clean all components to remove all the loose material.**
- **Clean both sealing surfaces with a non–residue solvent.**
- **Apply FIPG in an approx. 1 mm (0.04 in.) wide bead along the sealing surface.**
- **Parts must be assembled within 10 minutes of application. Otherwise, the FIPG material must be removed and reapplied.**

MANUAL TRANSMISSION UNIT (2WD)

MT02R–01

COMPONENTS

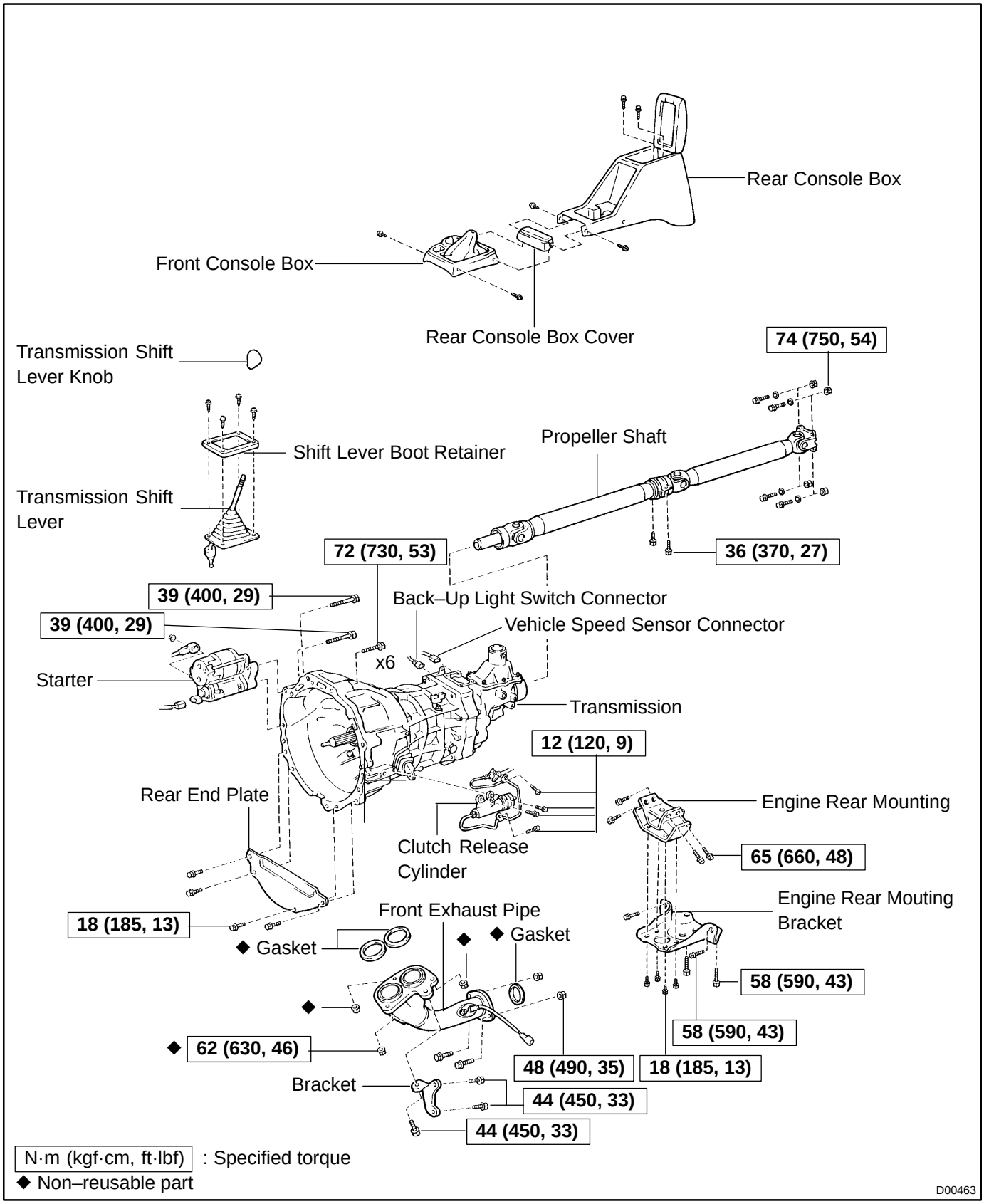

MT02T–01

INSTALLATION

Installation is in the reverse order of removal. (See page MT–4)

HINT:

After installation, do the road test.

MT02S–01

REMOVAL

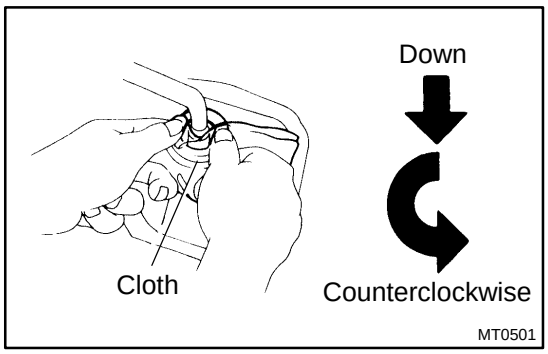

1. REMOVE TRANSMISSION SHIFT LEVER

(a) Remove the 4 screws and shift lever boot retainer.
(b) Cover the shift lever cap with a cloth.
(c) Pressing down on the shift lever cap and rotate it counterclockwise to remove.
(d) Pull out the shift lever.

HINT:
At the time of installation, please refer to the following item.
Apply MP grease to the tip of the shift lever.

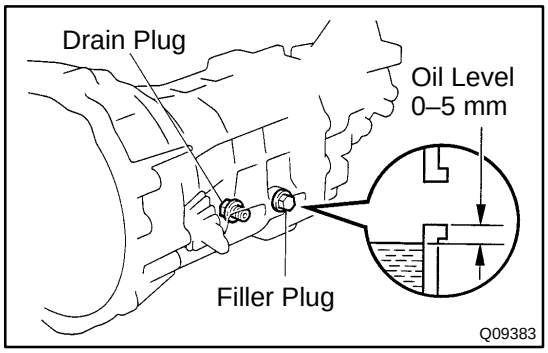

2. RAISE VEHICLE AND DRAIN TRANSMISSION OIL
Oil grade: API GL–4 or GL–5
Viscosity: SAE 75W–90
Capacity: 2.6 liters (2.7 US qts, 2.3 lmp. qts)
Torque: 37 N·m (380 kgf·cm, 27 ft·lbf)

3. REMOVE PROPELLER SHAFT
(See page PR–2)

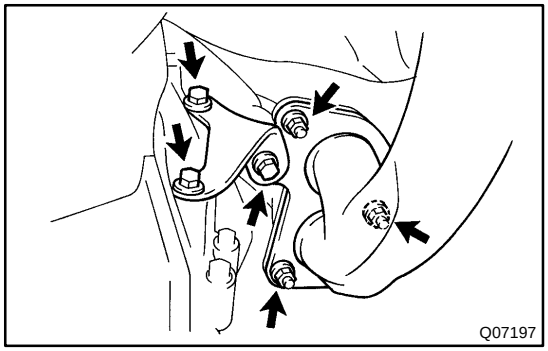

4. REMOVE FRONT EXHAUST PIPE

(a) Disconnect the 2 heated oxygen sensor connectors.
(b) Remove the 2 bolts, nuts and gasket.
Torque: 48 N·m (490 kgf·cm, 35 ft·lbf)
(c) Remove the 3 bolts and bracket.
Torque: 44 N·m (450 kgf·cm, 33 ft·lbf)
(d) Remove the 3 nuts, front exhaust pipe and 2 gaskets.
Torque: 62 N·m (630 kgf·cm, 46 ft·lbf)

5. DISCONNECT VEHICLE SPEED SENSOR AND BACK–UP LIGHT SWITCH CONNECTORS

6. DISCONNECT CLUTCH RELEASE CYLINDER

Remove the 4 bolts, release cylinder and line.
Torque: 12 N·m (120 kgf·cm, 9 ft·lbf)

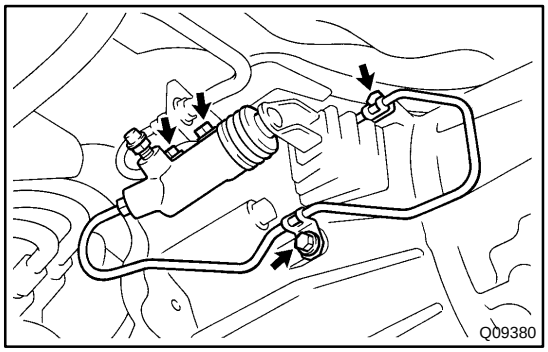

7. REMOVE STARTER

(a) Disconnect the connector and wire from the starter.
(b) Remove the 2 bolts and starter.
Torque: 39 N·m (400 kgf·cm, 29 ft·lbf)

8. REMOVE REAR END PLATE

Remove the 4 bolts and rear end plate.
Torque: 18 N·m (185 kgf·cm, 13 ft·lbf)

9. JACK UP TRANSMISSION SLIGHTLY

Using a transmission jack, support the transmission.

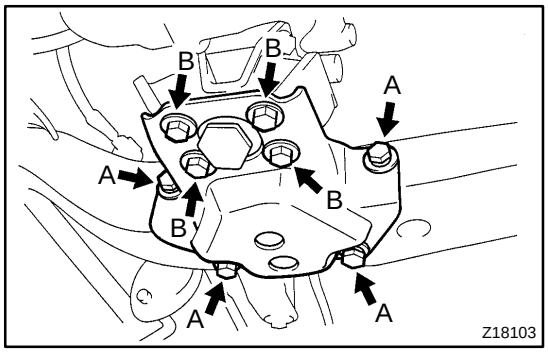

10. REMOVE ENGINE REAR MOUNTING BRACKET

Remove the 8 bolts and engine rear mounting bracket.

Torque:
Bolt A: 58 N·m (590 kgf·cm, 43 ft·lbf)
Bolt B: 18 N·m (185 kgf·cm, 13 ft·lbf)

11. REMOVE ENGINE REAR MOUNTING

Remove the 4 bolts and engine rear mounting.

Torque: 65 N·m (660 kgf·cm, 48 ft·lbf)

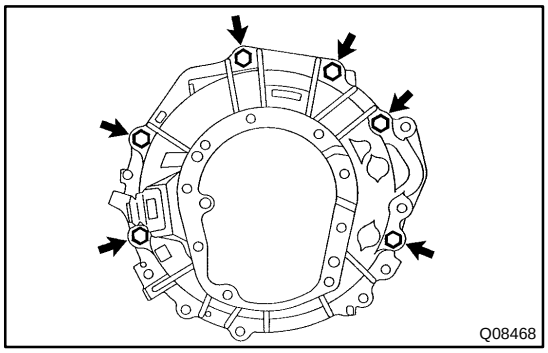

12. REMOVE TRANSMISSION

(a) Remove the 6 transmission mounting bolts from the engine.
Torque: 72 N·m (730 kgf·cm, 53 ft·lbf)
(b) Disconnect the wire harness from the transmission.

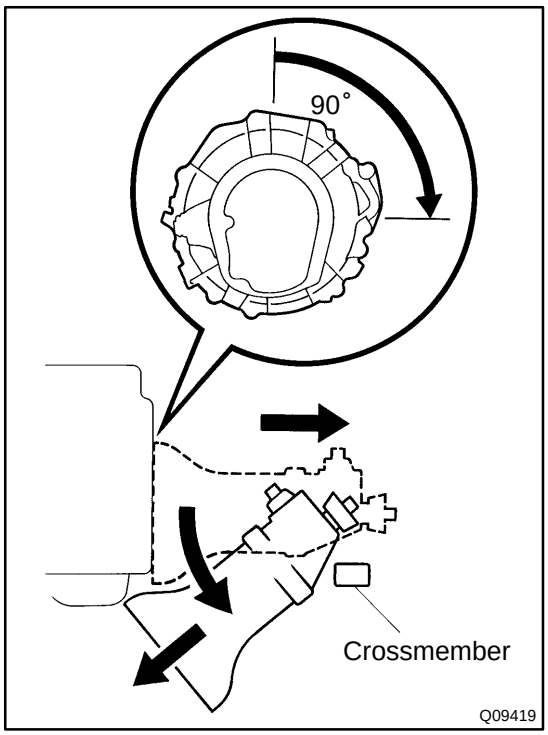

(c) Pull out the transmission up and toward the rear.
(d) Turn the transmission clockwise.
(e) Move the transmission backward again.
(f) Lower the front side of the transmission and remove it from the front side of the vehicle.

MANUAL TRANSMISSION UNIT (4WD)

MT02U–01

COMPONENTS

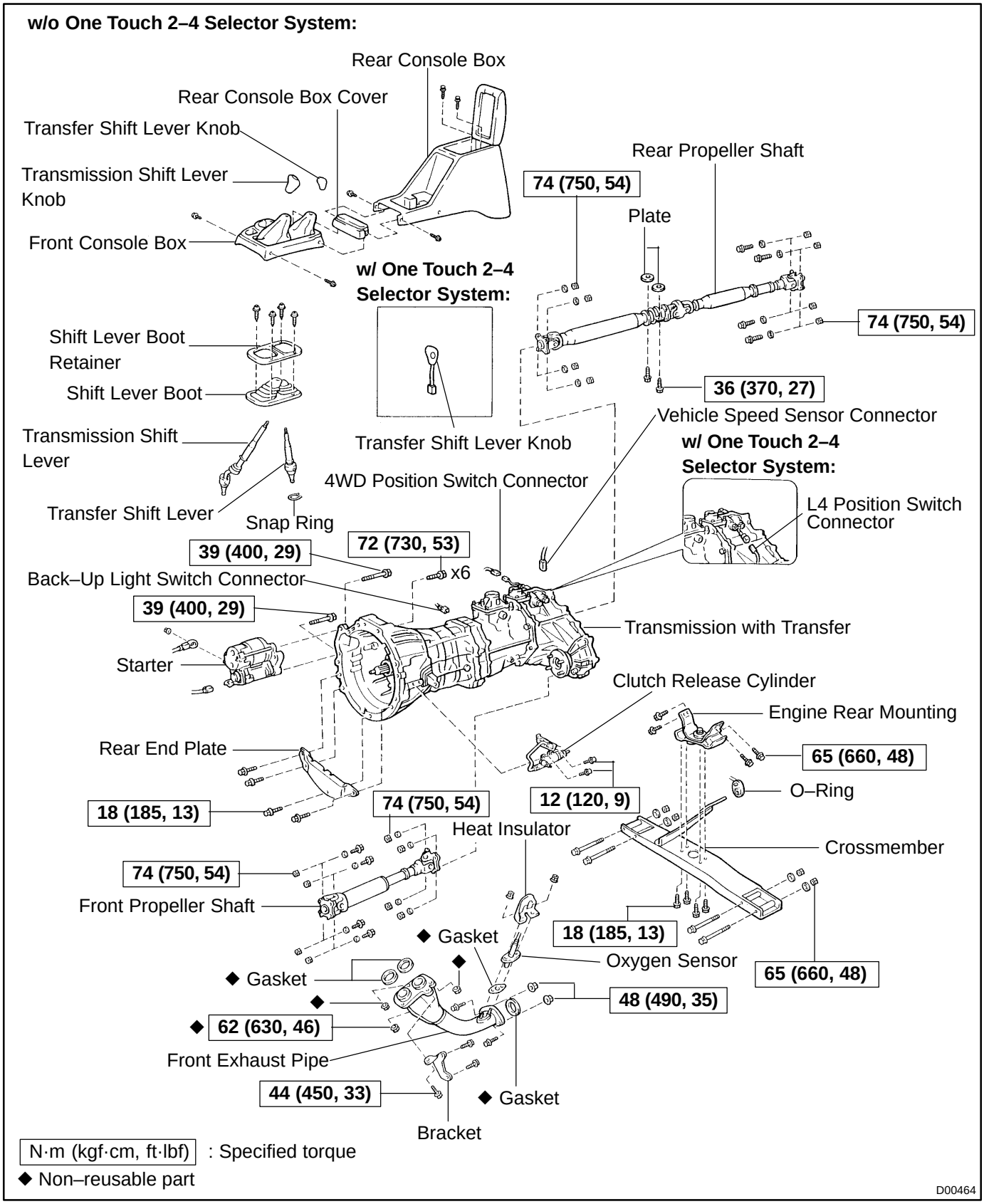

MT02W–01

INSTALLATION

Installation is in the reverse order of removal. (See page MT–8)

HINT:

After installation, do the road test.

MT02V–02

REMOVAL

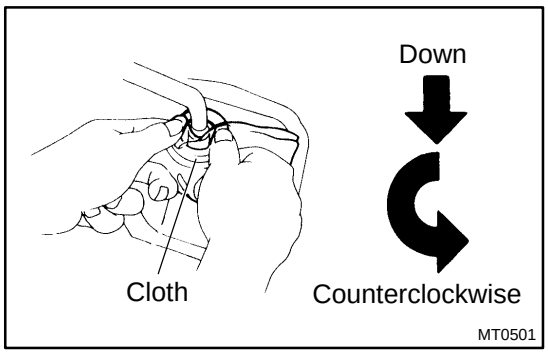

1. REMOVE TRANSMISSION SHIFT LEVER

(a) Remove the front and rear console boxes and the rear console box cover.
(See page BO–48)
(b) Remove the 4 screws and front console box.
(c) Remove the 4 screws and shift lever boot and retainer.
(d) Cover the shift lever cap with a cloth.
(e) Pressing down on the shift lever cap and rotate it counterclockwise to remove.
(f) Pull out the shift lever.

HINT:
At the time of installation, please refer to the following item.
Apply MP grease to the tip of the shift lever.

2. REMOVE TRANSFER SHIFT LEVER
(See page TR–6)

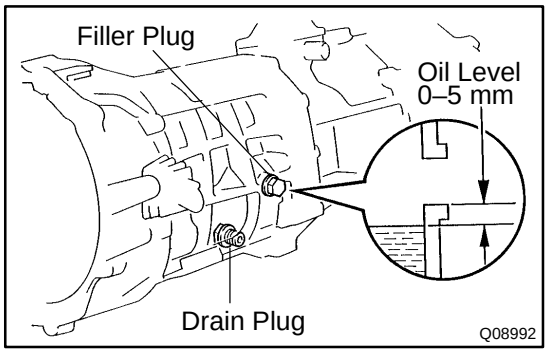

3. RAISE VEHICLE AND DRAIN TRANSMISSION OIL
Oil grade: API GL–4 or GL–5
Viscosity: SAE 75W–90
Capacity: 2.2 liters (2.3 US qts, 1.9 Imp. qts)
Torque: 37 N·m (380 kgf·cm, 27 ft·lbf)

4. REMOVE FRONT AND REAR PROPELLER SHAFTS
(See page PR–11)

5. DISCONNECT VEHICLE SPEED SENSOR AND BACK–UP LIGHT SWITCH CONNECTORS

6. w/o One Touch 2–4 Selector System:
DISCONNECT 4WD POSITION SWITCH CONNECTOR

7. w/ One Touch 2–4 Selector System:
DISCONNECT L4 POSITION SWITCH CONNECTOR

8. DISCONNECT CLUTCH RELEASE CYLINDER

Remove the 2 bolts and release cylinder.
Torque: 12 N·m (120 kgf·cm, 9 ft·lbf)

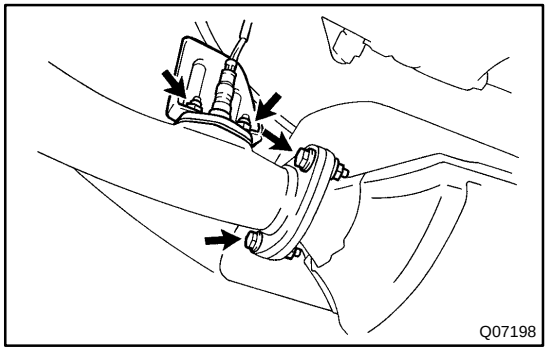

9. REMOVE FRONT EXHAUST PIPE

(a) Remove the 2 nuts, gasket, oxygen sensor and insulator.
(b) Remove the 2 bolts, nuts and gasket.
Torque: 48 N·m (490 kgf·cm, 35 ft·lbf)

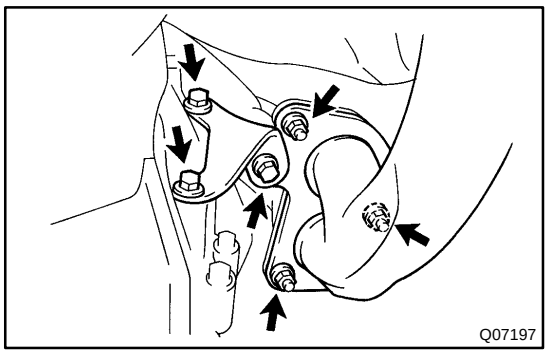

(c) Remove the 3 bolts and bracket.
Torque: 44 N·m (450 kgf·cm, 33 ft·lbf)
(d) Remove the 3 nuts, front exhaust pipe and 2 gaskets.
Torque: 62 N·m (630 kgf·cm, 46 ft·lbf)

10. REMOVE STARTER
(a) Disconnect the connector and wire from the starter.
(b) Remove the 2 bolts and starter.
Torque: 39 N·m (400 kgf·cm, 29 ft·lbf)

11. REMOVE REAR END PLATE
Remove the 4 bolts and rear end plate.
Torque: 18 N·m (185 kgf·cm, 13 ft·lbf)

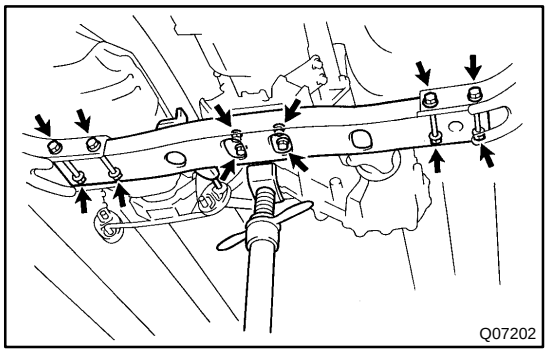

12. REMOVE CROSSMEMBER
(a) Support the transmission rear side.
(b) Remove the 4 set bolts of the engine rear mounting.
Torque: 18 N·m (185 kgf·cm, 13 ft·lbf)
(c) Disconnect the O–ring and remove the 4 bolts, nuts and crossmember.
Torque: 65 N·m (660 kgf·cm, 48 ft·lbf)

13. REMOVE ENGINE REAR MOUNTING
Remove the 4 bolts and engine rear mounting.
Torque: 65 N·m (660 kgf·cm, 48 ft·lbf)

14. JACK UP TRANSMISSION SLIGHTLY
Using a transmission jack, support the transmission.

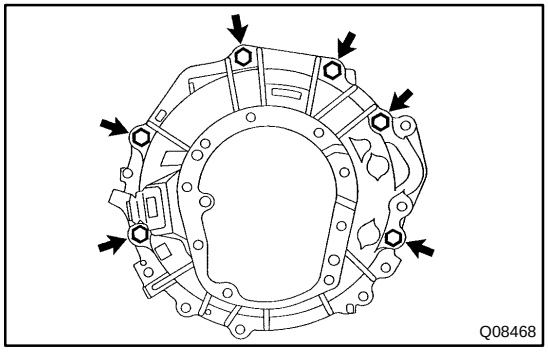

15. REMOVE TRANSMISSION
(a) Remove the 6 transmission mounting bolts from the engine.
Torque: 72 N·m (730 kgf·cm, 53 ft·lbf)
(b) Disconnect the wire harness from the transmission.
(c) Pull out the transmission with the transfer down and toward the rear.

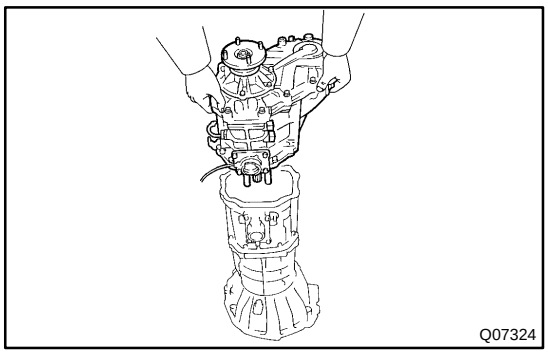

16. REMOVE TRANSFER FROM TRANSMISSION

(a) Remove the transfer adaptor rear mounting bolts.
Torque: 24 N·m (240 kgf·cm, 17 ft·lbf)

(b) Pull the transfer straight up and remove it from the transmission.

HINT:

Take care not to damage the adaptor rear oil seal with the transfer input gear spline.

HINT:

At the time of installation, please refer to the following item.
Apply MP grease to the lip of the adaptor oil seal.

OUTPUT SHAFT

COMPONENTS

MT033–04

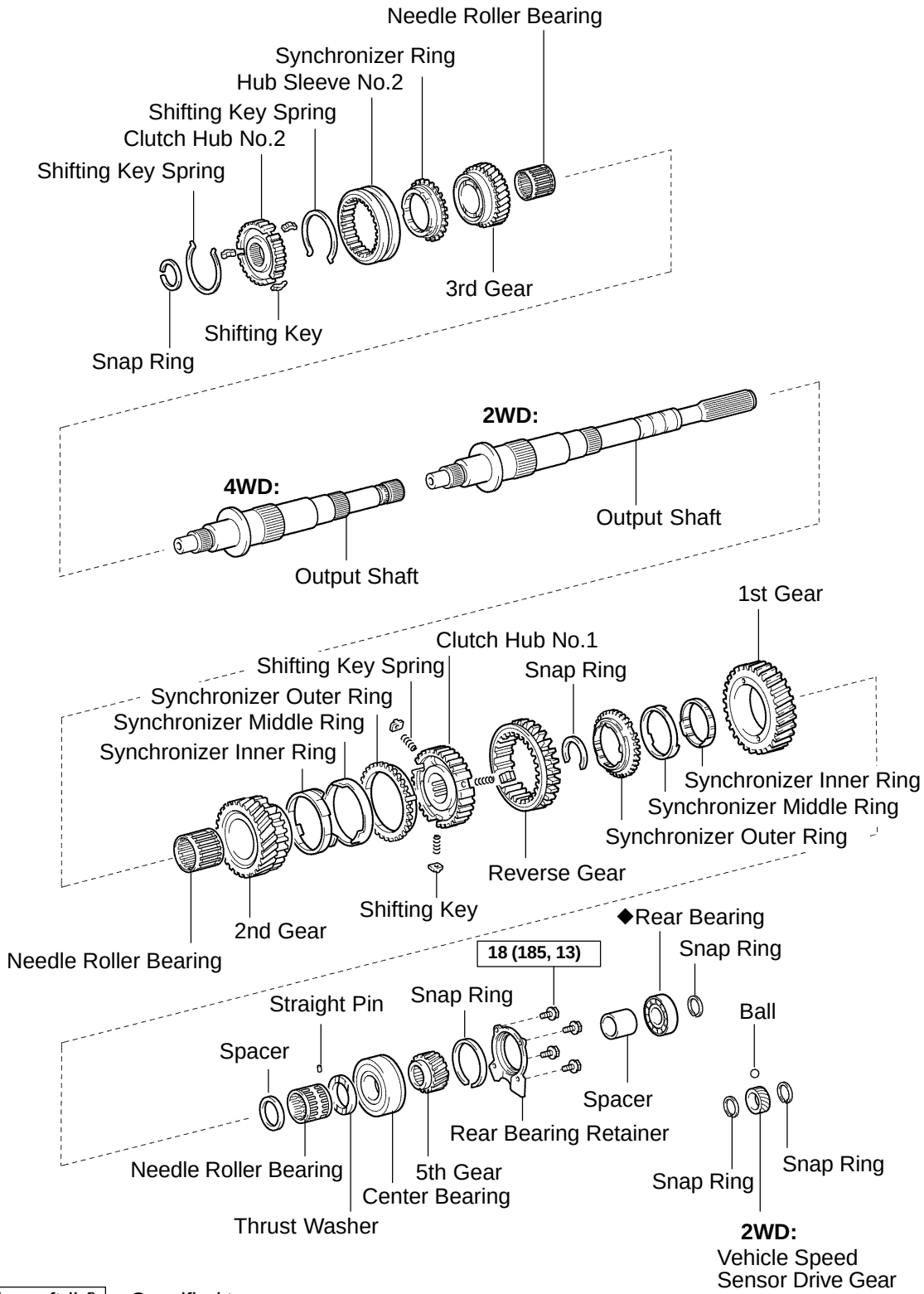

N·m (kgf·cm, ft·lbf) : Specified torque

◆ Non–reusable part

D10474

MT034–04

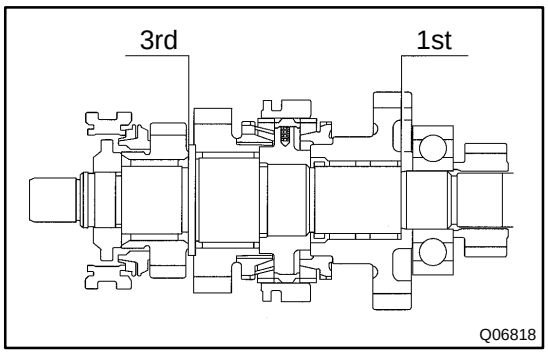

DISASSEMBLY

1. INSPECT EACH GEAR THRUST CLEARANCE

Measure the thrust clearance of each gear.

Standard clearance:
1st gear:
0.20 – 0.45 mm (0.0079 – 0.0177 in.)
2nd and 3rd gears:
0.10 – 0.25 mm (0.0039 – 0.0098 in.)
Maximum clearance:
1st gear: 0.45 mm (0.0177 in.)
2nd and 3rd gears: 0.25 mm (0.0098 in.)

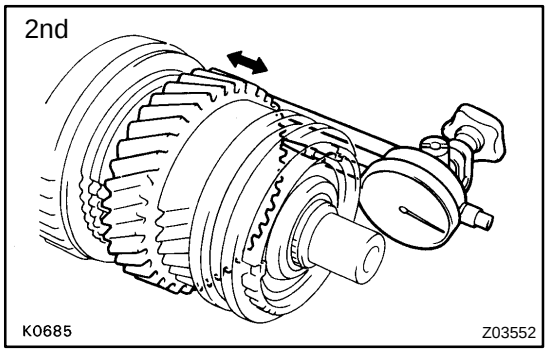

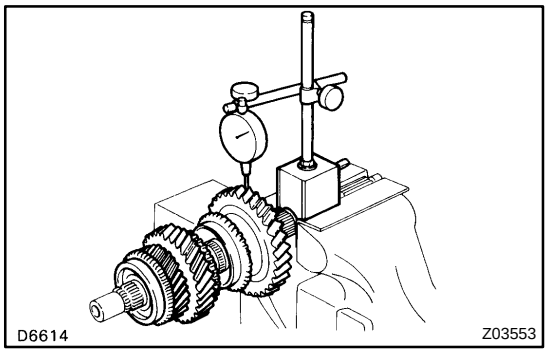

2. INSPECT EACH GEAR RADIAL CLEARANCE

Using a dial indicator, measure the radial clearance of each gear.

Standard clearance:
1st gear:
0.020 – 0.073 mm (0.0008 – 0.0029 in.)
2nd and 3rd gears:
0.015 – 0.068 mm (0.0006 – 0.0027 in.)
Maximum clearance:
1st gear: 0.073 mm (0.0029 in.)
2nd and 3rd gears: 0.068 mm (0.0027 in.)

If the clearance exceeds the maximum, replace the gear, needle roller bearing or shaft.

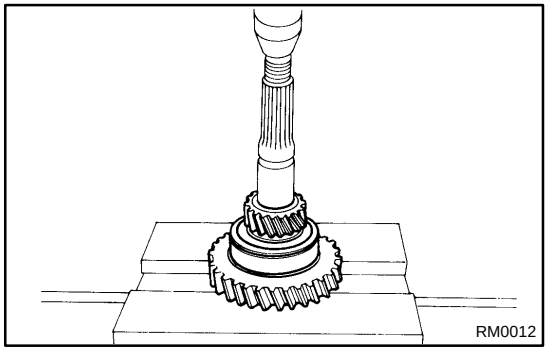

3. REMOVE 5TH GEAR, OUTPUT SHAFT CENTER BEARING AND 1ST GEAR ASSEMBLY

(a) Using a press, remove the 5th gear, center bearing, thrust washer and 1st gear assembly.
(b) Remove the straight pin and needle roller bearing.
(c) Remove the spacer.

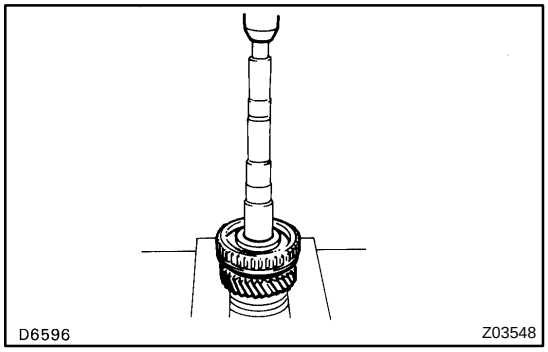

4. REMOVE REVERSE GEAR ASSEMBLY AND 2ND GEAR ASSEMBLY

(a) Using 2 screwdrivers and a hammer, tap out the snap ring.

(b) Using a press, remove the reverse gear assembly and 2nd gear assembly.

(c) Remove the needle roller bearing.

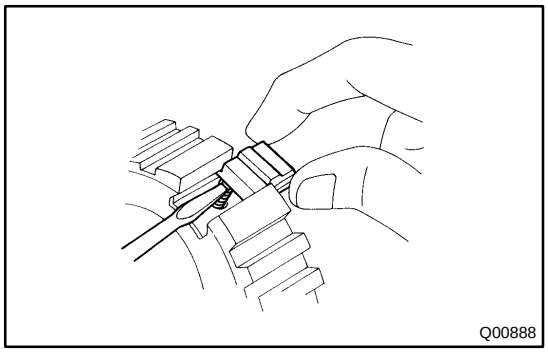

5. REMOVE REVERSE GEAR, SHIFTING KEY AND SPRING FROM CLUTCH HUB NO.1

(a) Remove the reverse gear from the clutch hub No.1.

(b) Push the shifting key spring with a screwdriver, remove the 3 shifting keys and key springs.

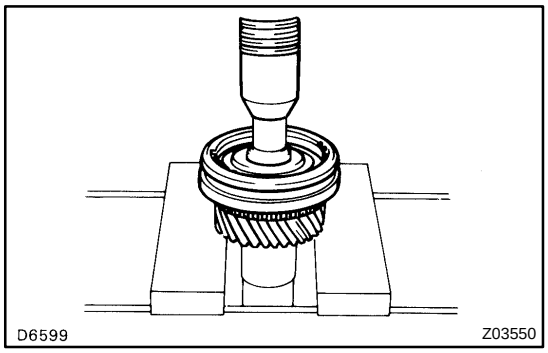

6. REMOVE HUB SLEEVE NO.2 ASSEMBLY AND 3RD GEAR ASSEMBLY

(a) Using a snap ring expander, remove the snap ring.

(b) Using a press, remove the hub sleeve No.2 assembly and 3rd gear assembly.

(c) Remove the needle roller bearing.

7. REMOVE SHIFTING KEY AND SPRING FROM HUB SLEEVE NO.2 ASSEMBLY

Using a screwdriver, remove the 3 shifting keys and 2 springs.

MT035–02

INSPECTION

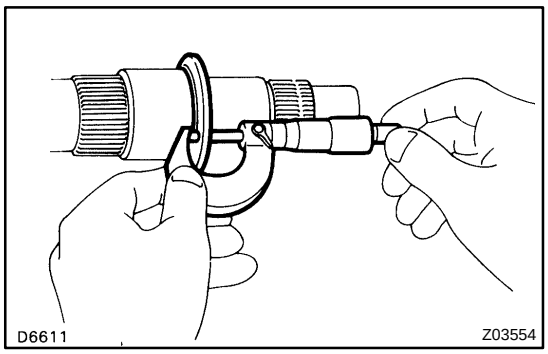

1. INSPECT OUTPUT SHAFT

(a) Using a micrometer, measure the output shaft flange thickness.

Minimum thickness: 4.80 mm (0.1890 in.)

If the thickness is less than the minimum, replace the output shaft.

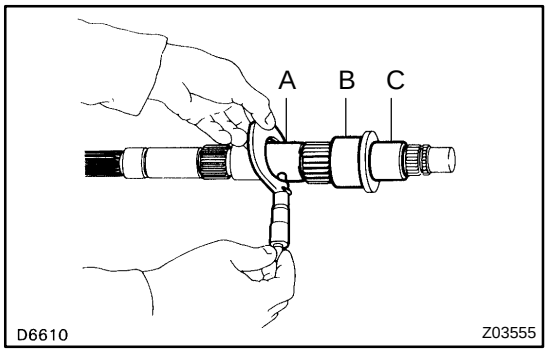

(b) Using a micrometer, measure the outer diameter of the output shaft journal.

Minimum diameter:

A 1st gear: 38.979 mm (1.5346 in.)

B 2nd gear: 46.984 mm (1.8498 in.)

C 3rd gear: 37.984 mm (1.4954 in.)

If the outer diameter is less than the minimum, replace the output shaft.

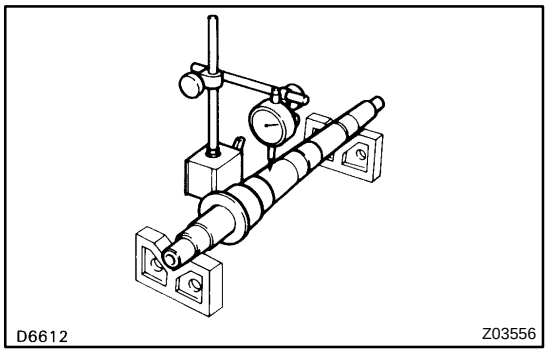

(c) Using a dial indicator, check the shaft runout.

Maximum runout: 0.03 mm (0.0012 in.)

If the runout exceeds the maximum, replace the output shaft.

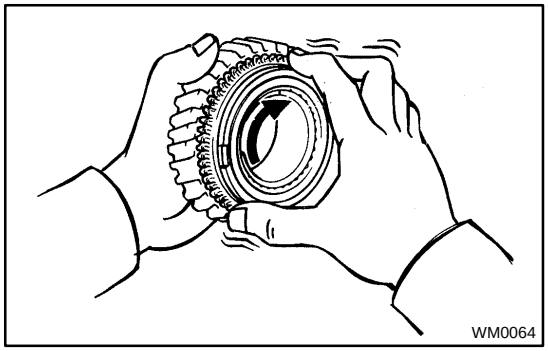

2. INSPECT 3RD GEAR SYNCHRONIZER RING

(a) Check for wear or damage.

(b) Check the braking effect of the synchronizer ring.
Turn the synchronizer ring in one direction while pushing it to the gear cone. Check that the ring locks.

If the braking effect is insufficient, apply a small amount of the fine lapping compound between the synchronizer ring and gear cone. Lightly rub the synchronizer ring and gear cone together.

NOTICE:

Ensure the fine lapping compound is completely washed off after rubbing.

(c) Check again the braking effect of the synchronizer ring.

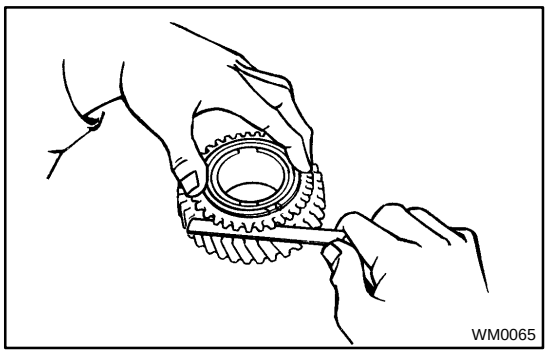
WM0065

(d) Using a feeler gauge, measure the clearance between the synchronizer ring back and gear spline end.

Minimum clearance: 0.75 mm (0.030 in.)

If the clearance is less than the minimum, replace the synchronizer ring, and apply a small amount of the fine lapping compound on gear cone.

NOTICE:

Ensure the fine lapping compound is completely washed off after rubbing.

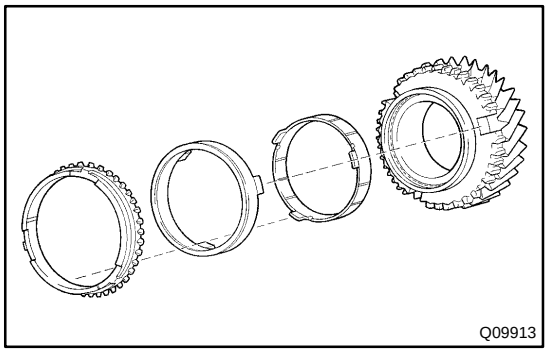
Q09913

3. INSPECT 1ST AND 2ND GEAR SYNCHRONIZER RING

(a) Check for wear or damage.

(b) Install the synchronizer inner ring, middle ring and outer ring to each gear.

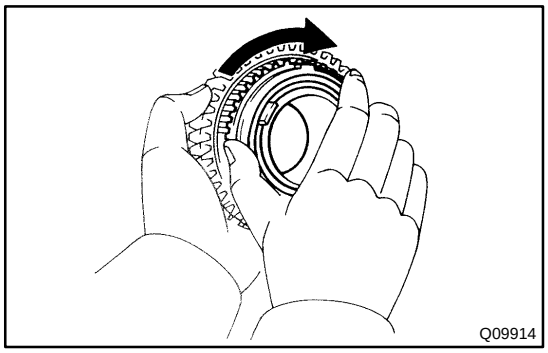
Q09914

(c) Check the braking effect of the synchronizer ring. Turn the synchronizer ring in one direction while pushing it to the gear cone. Check that the ring locks.

If it does not lock, replace the synchronizer ring.

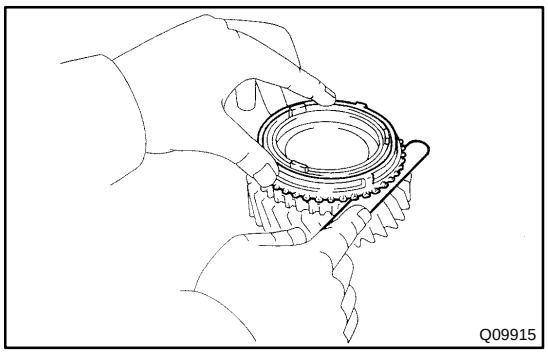
Q09915

(d) Using a feeler gauge, measure the clearance between the synchronizer ring back and gear spline end.

Minimum clearance: 0.65 mm (0.026 in.)

If the clearance is less than the minimum, replace the synchronizer ring.

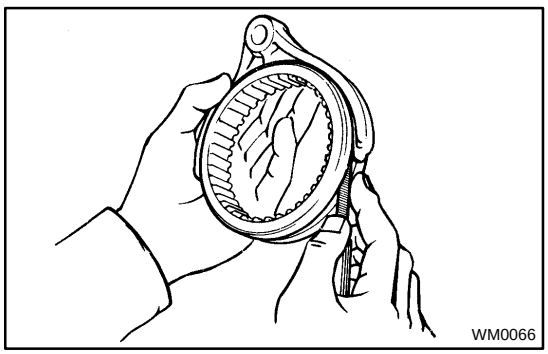
WM0066

4. INSPECT SHIFT FORK AND HUB SLEEVE CLEARANCE

Using a feeler gauge, measure the clearance between the hub sleeve and shift fork.

Maximum clearance:

Reverse gear	0.41 mm (0.016 in.)
Hub sleeve No. 2	0.35 mm (0.014 in.)

If the clearance exceeds the maximum, replace the shift fork or hub sleeve.

MT036–04

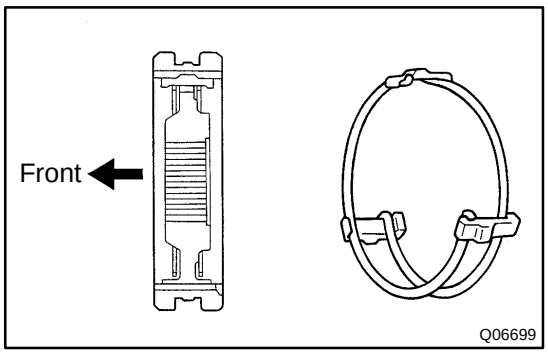

REASSEMBLY

HINT:

Coat all of the sliding and rotating surfaces with gear oil before reassembly.

1. INSTALL CLUTCH HUB NO.2 INTO HUB SLEEVE NO.2

(a) Install the clutch hub No.2 and shifting keys to the hub sleeve No.2.

(b) Install the shifting key springs under the shifting keys.

NOTICE:

Position the key springs so that their end gaps are not aligned.

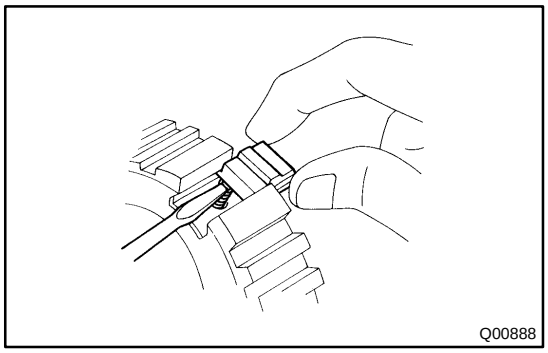

2. INSTALL CLUTCH HUB NO.1 INTO REVERSE GEAR

(a) Install the 3 shifting key springs to the clutch hub No.1.

(b) While pushing the shifting key spring with a screwdriver, install the 3 shifting keys.

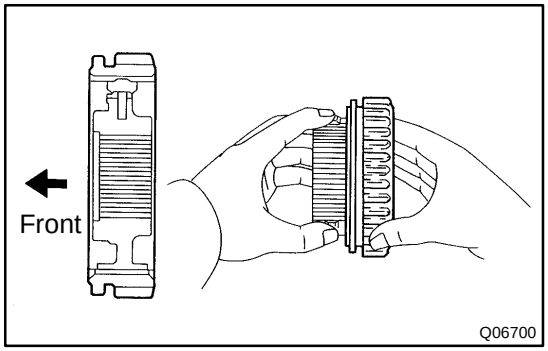

(c) While pushing the 3 shifting keys, install the clutch hub No.1 to the reverse gear, as shown.

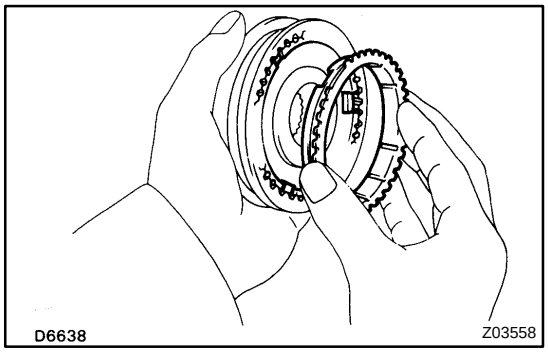

3. INSTALL 3RD GEAR AND HUB SLEEVE NO.2 ON OUTPUT SHAFT

(a) Apply gear oil to the shaft and needle roller bearing.

(b) Place the synchronizer ring on the gear and align the ring slots with the shifting keys.

(c) Install the needle roller bearing in the 3rd gear.

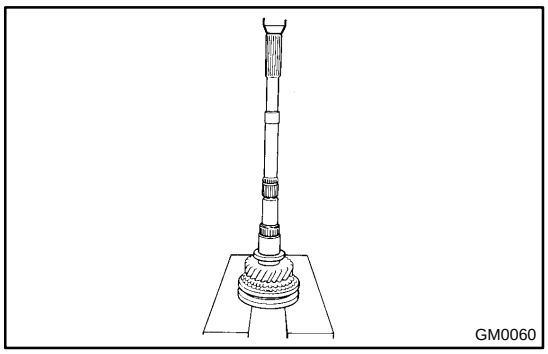

(d) Using a press, install the 3rd gear and hub sleeve No.2.

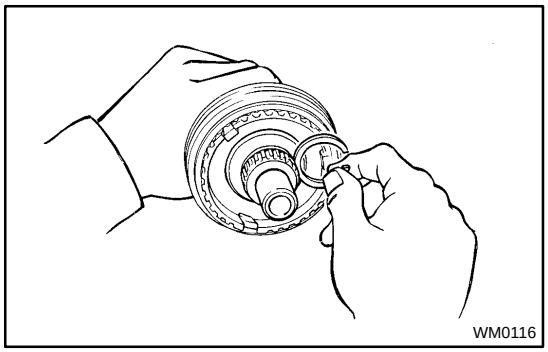

4. INSTALL SNAP RING

(a) Select a snap ring that allows the minimum axial play.

Mark	Thickness mm (in.)
A	1.80 – 1.85 (0.0709 – 0.0728)
B	1.85 – 1.90 (0.0728 – 0.0748)
C	1.90 – 1.95 (0.0748 – 0.0768)
D	1.95 – 2.00 (0.0768 – 0.0787)
E	2.00 – 2.05 (0.0787 – 0.0807)
F	2.05 – 2.10 (0.0807 – 0.0827)
G	2.10 – 2.15 (0.0827 – 0.0846)

(b) Using a snap ring expander, install the snap ring.

5. INSPECT 3RD GEAR THRUST CLEARANCE
(See page MT–27)

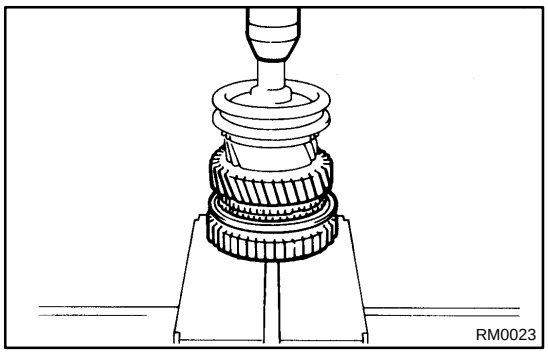

6. INSTALL 2ND GEAR AND REVERSE GEAR

(a) Apply gear oil to the shaft and needle roller bearing.
(b) Place the synchronizer ring on the gear and align the ring slots with the shifting keys.
(c) Align the projection of the synchronizer inner ring with the slots of the clutch hub No.1.
(d) Install the needle roller bearing in the 2nd gear.
(e) Using a press, install the 2nd gear assembly and reverse gear assembly.

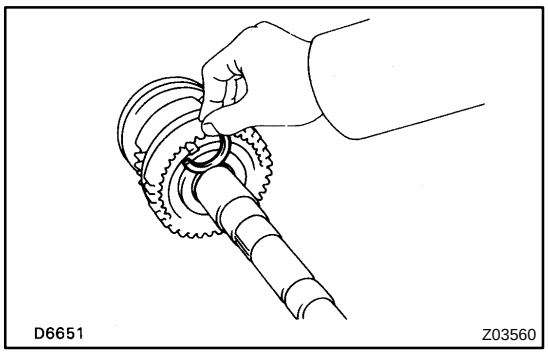

7. INSTALL SNAP RING

(a) Select a snap ring that allows the minimum axial play.

Mark	Thickness mm (in.)
A	2.30 – 2.35 (0.0906 – 0.0925)
B	2.35 – 2.40 (0.0925 – 0.0945)
C	2.40 – 2.45 (0.0945 – 0.0965)
D	2.45 – 2.50 (0.0965 – 0.0984)
E	2.50 – 2.55 (0.0984 – 0.1004)
F	2.55 – 2.60 (0.1004 – 0.1024)
G	2.60 – 2.65 (0.1024 – 0.1043)

(b) Using a screwdriver and hammer, install the snap ring.

8. INSTALL SPACER AND 1ST GEAR ASSEMBLY

(a) Install the spacer on the output shaft.

(b) Apply gear oil to the needle roller bearing.

(c) Assemble the 1st gear, synchronizer rings and needle roller bearing.

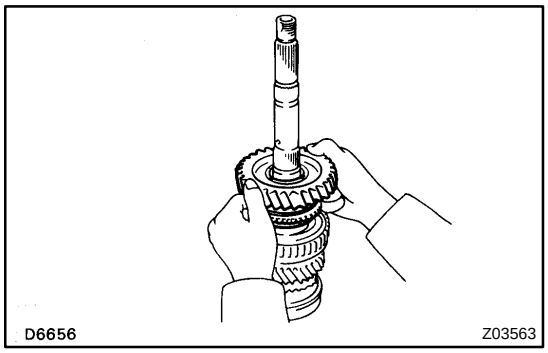

(d) Install the assembly on the output shaft with the synchronizer ring slots aligned with the shifting keys.

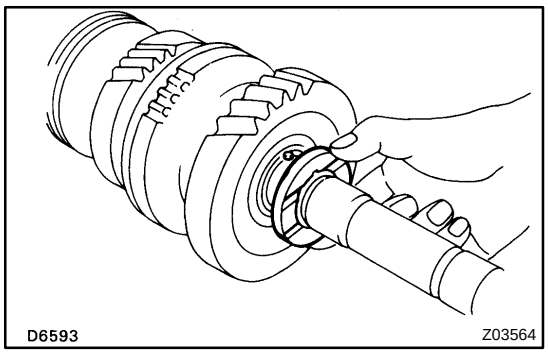

9. INSTALL STRAIGHT PIN AND 1ST GEAR THRUST WASHER

Install the 1st gear thrust washer onto the output shaft with the straight pin aligned with the 1st gear thrust washer.

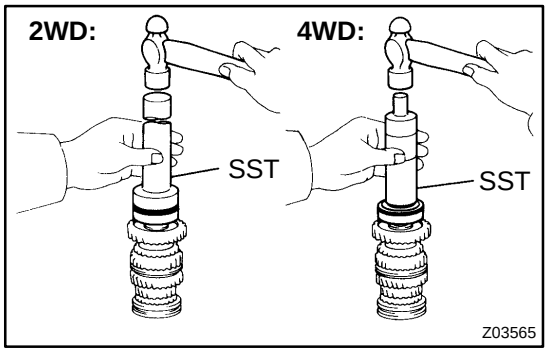

10. INSTALL OUTPUT SHAFT CENTER BEARING

(a) 2WD:
Using SST and a hammer, drive in the bearing with the outer race snap ring groove toward the rear.
SST 09309–35010

(b) 4WD:
Using SST and a hammer, drive in the bearing with the outer race snap ring groove toward the rear.
SST 09316–60011 (09316–00011, 09316–00071)

11. INSPECT 1ST GEAR THRUST CLEARANCE
(See page MT–27)

12. INSPECT 2ND GEAR THRUST CLEARANCE
(See page MT–27)

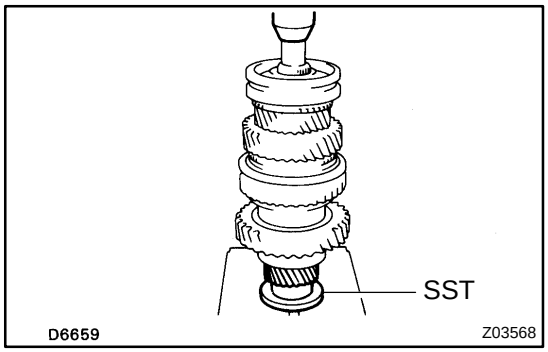

13. INSTALL 5TH GEAR

Using SST and a press, install the 5th gear.

SST 09316–60011 (09316–00031)

TROUBLESHOOTING

MT02Q–02

PROBLEM SYMPTOMS TABLE

Use the table below to help you find the cause of the problem. The numbers indicate the priority of the likely cause of the problem. Check each part in order. If necessary, replace these parts.

Symptom	Suspect Area	See page
Noise	15.Oil (Level low)	MT–4 MT–8
	16.Oil (Wrong)	MT–4 MT–8
	17.Gear (Worn or damaged)	MT–12
	18.Bearing (Worn or damaged)	MT–12
Oil leakage	1. Oil (Level too high)	MT–4 MT–8
	2. Gasket (Damaged)	MT–12
	3. Oil seal (Worn or damaged)	MT–12
	4. O–Ring (Worn or damaged)	MT–12
Hard to shift or will not shift	1. Synchronizer ring (Worn or damaged)	MT–23 MT–26 MT–35
	2. Shift key spring (Damaged)	MT–26 MT–35
Jumps out of gear	1. Locking ball spring (Damaged)	MT–12
	2. Shift fork (Worn)	MT–12
	3. Gear (Worn or damaged)	MT–12
	4. Bearing (Worn or damaged)	MT–12

COUNTER GEAR AND REVERSE IDLER GEAR

MT02F–01

COMPONENTS

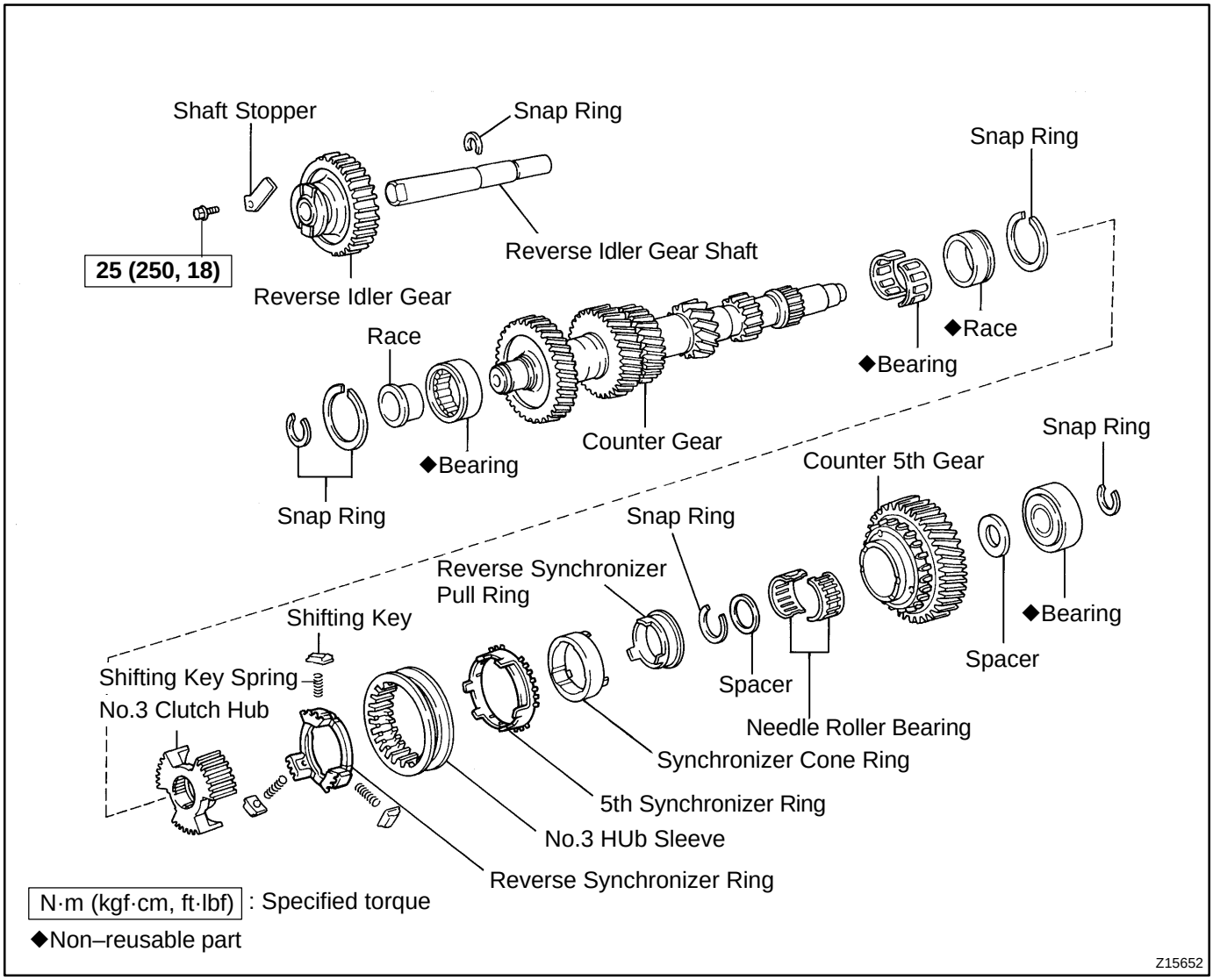

MT02G–01

DISASSEMBLY

REMOVE NO.3 HUB SLEEVE, SHIFTING KEY AND SPRING FROM SYNCHRONIZER RING

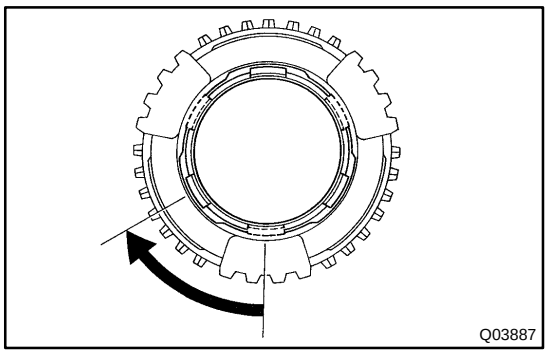

(a) Remove the synchronizer ring assembly from the No.3 hub sleeve.

(b) Turn the reverse synchronizer pull ring.

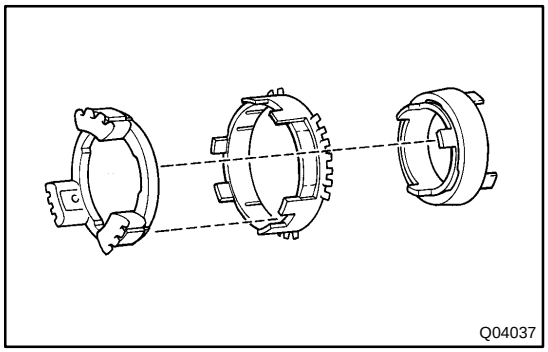

(c) Remove the reverse synchronizer ring and 5th synchronizer ring from the synchronizer pull ring and cone ring.

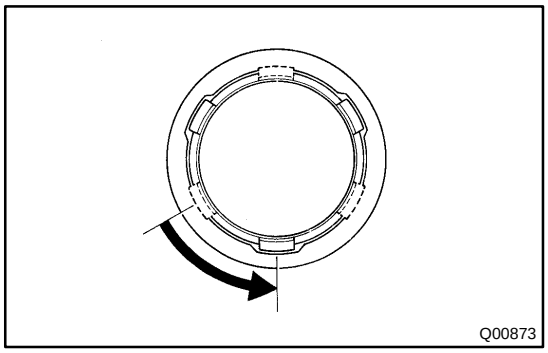

(d) Turn the reverse synchronizer pull ring and separate the pull ring and cone ring.

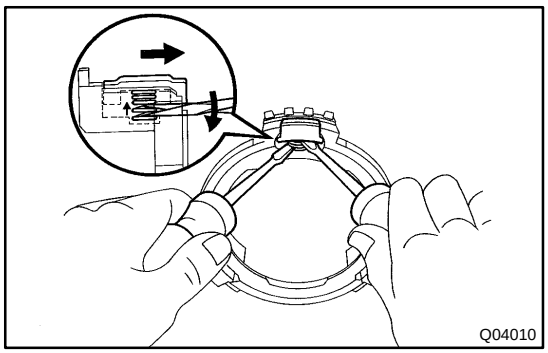

(e) Remove the 3 shifting keys and key springs by carefully levering up the shifting key spring with one screwdriver and levering the shifting key away from the reverse synchronizer ring with another screwdriver.

MT02H–01

INSPECTION

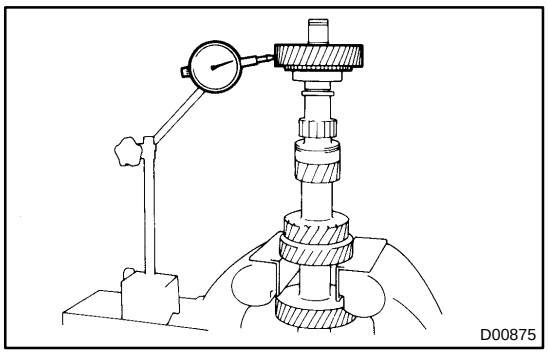

1. INSPECT COUNTER 5TH GEAR RADIAL CLEARANCE

(a) Install the spacer, counter 5th gear and needle roller bearing to the counter gear.

(b) Using a dial indicator, measure the counter 5th gear radial clearance.

Standard clearance:
0.009–0.060 mm (0.0004–0.0024 in.)
Maximum clearance:
0.150 mm (0.0059 in.)

If the clearance exceeds the maximum, replace the counter gear, needle roller bearing or counter 5th gear.

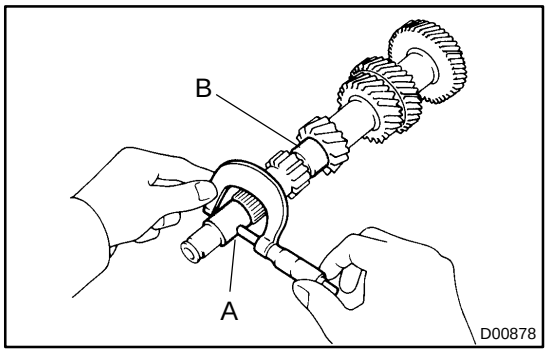

2. INSPECT COUNTER GEAR

Using a micrometer, measure the outer diameter of the counter shaft journal.

Minimum diameter:
Part A: 26.975 mm (1.0620 in.)
Part B: 29.950 mm (1.1791 in.)

If the outer race is less than the minimum, replace the counter gear.

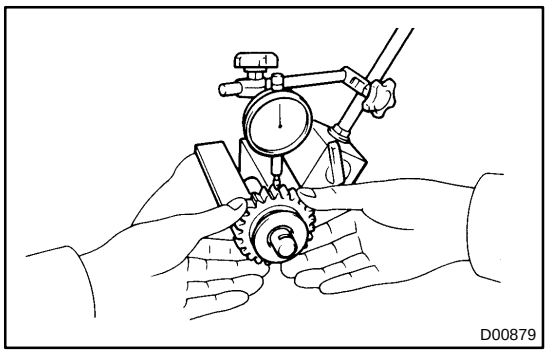

3. INSPECT REVERSE IDLER GEAR RADIAL CLEARANCE

Using a dial indicator, measure the reverse idler gear radial clearance.

Standard clearance:
0.041–0.074 mm (0.0016–0.0029 in.)
Maximum clearance:
0.194 mm (0.0076 in.)

If the clearance exceeds the maximum, replace the gear or shaft.

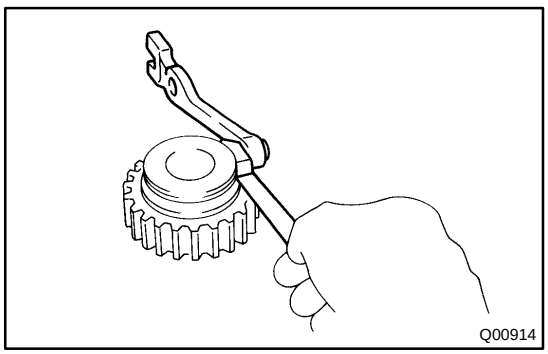

4. INSPECT REVERSE IDLER GEAR AND SHIFT ARM SHOE CLEARANCE

Using a feeler gauge, measure the clearance between the reverse idler gear and shift arm shoe.

Standard clearance:
0.20–0.41 mm (0.0079–0.0161 in.)
Maximum clearance:
0.90 mm (0.0354 in.)

If the clearance exceeds the maximum, replace the shift arm shoe or reverse idler gear.

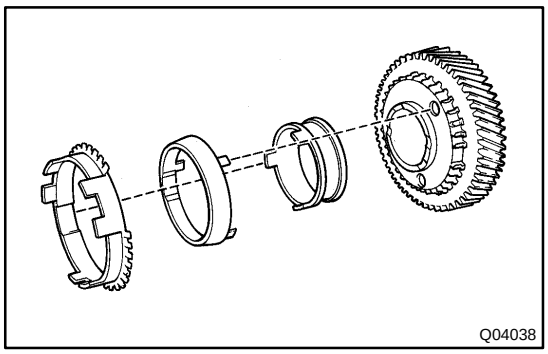

5. INSPECT 5TH GEAR SYNCHRONIZER RING

(a) Check for wear or damage.

(b) Install the synchronizer pull ring, cone ring and outer ring to the 5th gear.

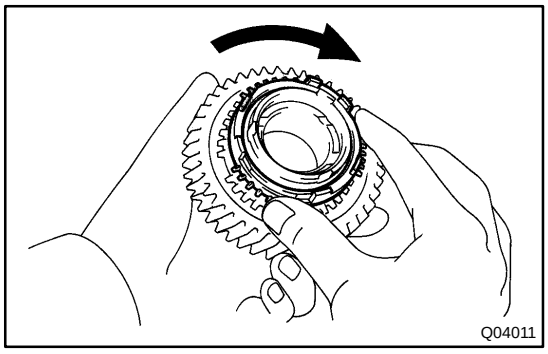

(c) Check the braking effect of the synchronizer ring. Turn the synchronizer ring in one direction while pushing it to the gear cone. Check that the ring locks.

If it does not lock, replace the synchronizer ring.

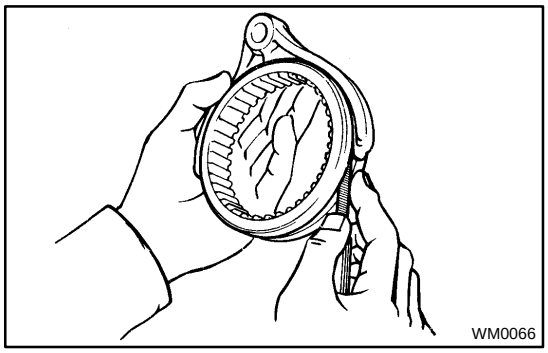

6. INSPECT SHIFT FORK AND HUB SLEEVE CLEARANCE

Using a feeler gauge, measure the clearance between the hub sleeves and shift forks.

Maximum clearance: 1.0 mm (0.039 in.)

If the clearance exceeds the maximum, replace the shift fork or hub sleeve.

MT02J–01

REASSEMBLY

INSTALL SYNCHRONIZER RING ASSEMBLY TO NO.3 HUB SLEEVE

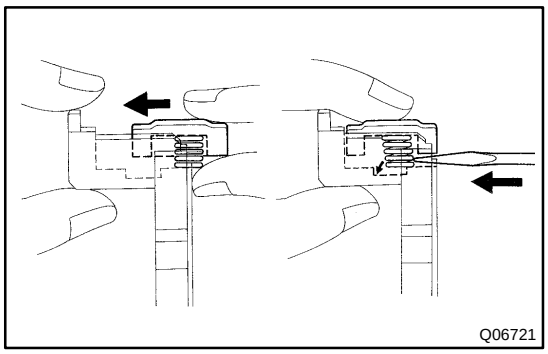

(a) Push the synchronizer key spring, install the shifting key and key spring to the reverse synchronizer ring.

(b) Using a screwdriver, push the 3 key springs into the synchronizer ring spring gaps.

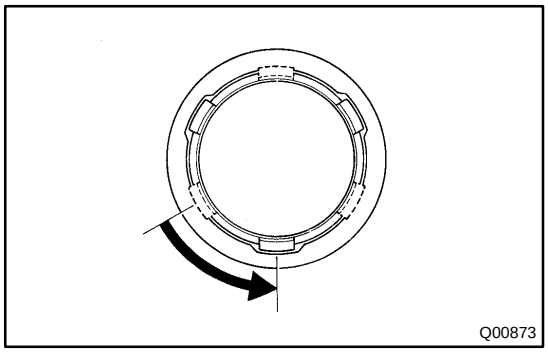

(c) Install the synchronizer cone ring to the reverse synchronizer pull ring and turn the pull ring.

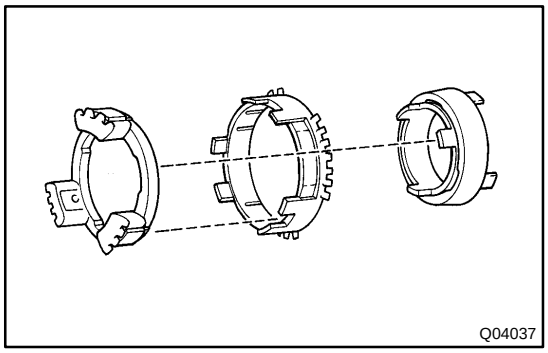

(d) Install the 5th synchronizer ring.

(e) Install the reverse synchronizer ring.

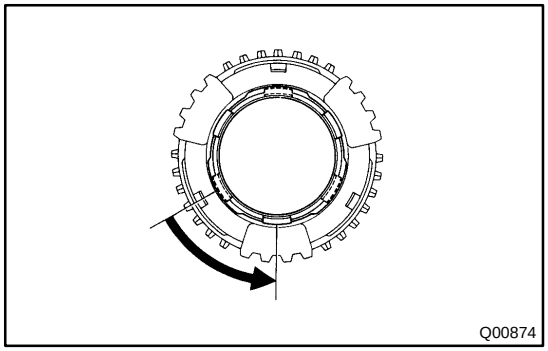

(f) Turn the reverse synchronizer pull ring.

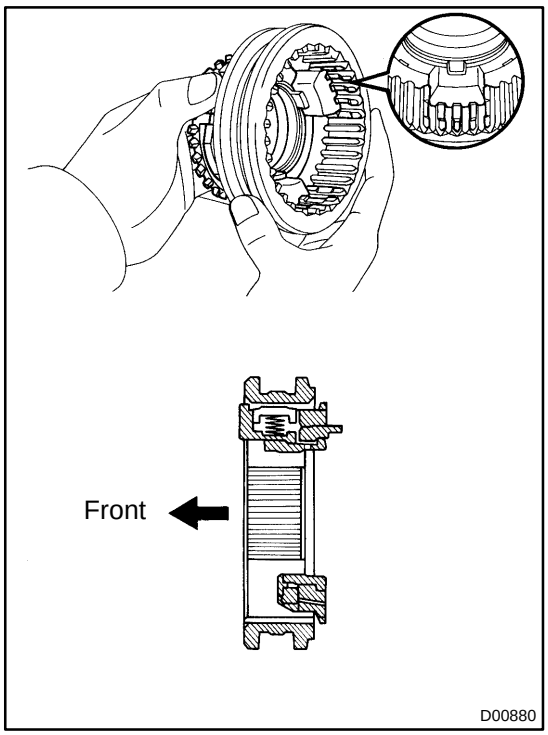

(g) While pushing 3 shifting keys, install the synchronizer ring assembly to the No.3 hub sleeve.

MT02I–02

REPLACEMENT

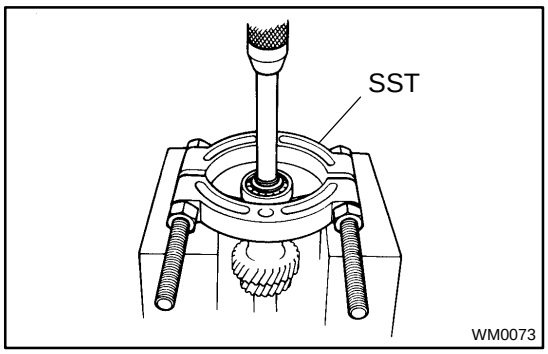

1. IF NECESSARY, REPLACE COUNTER GEAR FRONT BEARING AND SIDE RACE

(a) Using a snap ring expander, remove the snap ring.

(b) Using SST and a press, press out the bearing.
SST 09950–00020

(c) Check the side race for wear or damage.

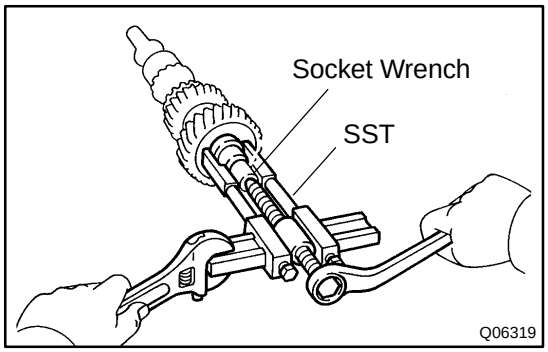

(d) If necessary, remove the side race.
Using SST and a socket wrench, remove the side race.
SST 09950–40011

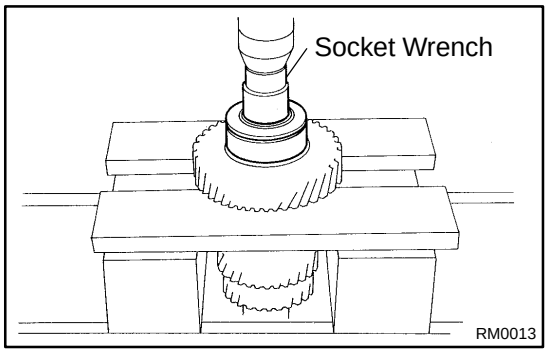

(e) Using a socket wrench and press, install a new bearing, side race and inner race.

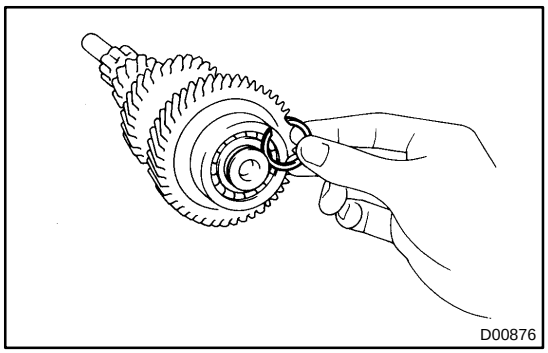

(f) Select a snap ring that allows the minimum axial play.

Mark	Thickness mm (in.)
A	2.05 – 2.10 (0.0807 – 0.0827)
B	2.10 – 2.15 (0.0827 – 0.0846)
C	2.15 – 2.20 (0.0846 – 0.0866)
D	2.20 – 2.25 (0.0866 – 0.0886)
E	2.25 – 2.30 (0.0886 – 0.0906)
F	2.30 – 2.35 (0.0906 – 0.0925)

(g) Using a snap ring expander, install the snap ring.

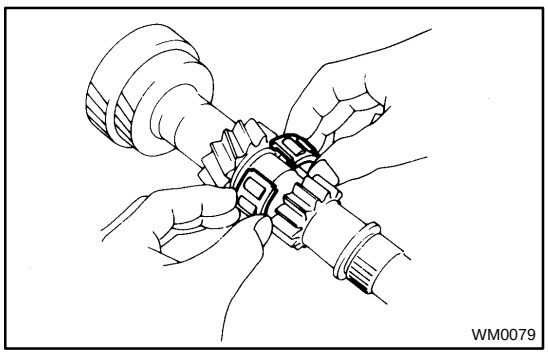

2. IF NECESSARY, REPLACE COUNTER GEAR CENTER BEARING

(a) Remove the bearing from the counter gear.

(b) Install a new bearing on the counter gear.

HINT:

Engage the roller cages.

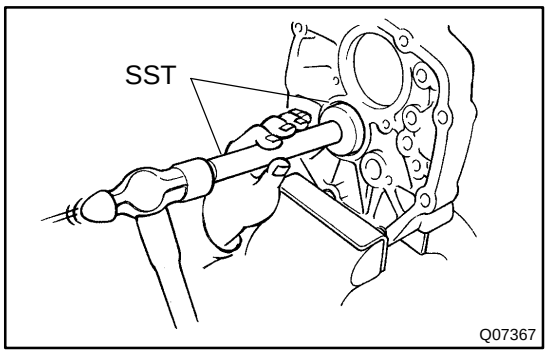

(c) Using SST, tap out the bearing outer race.
SST 09950–60010 (09951–00510), 09950–70010 (09951–07150)

HINT:
After the outer race has been installed, the transmission is reassembled.

EXTENSION HOUSING AND TRANSFER ADAPTOR

MT02M–01

COMPONENTS

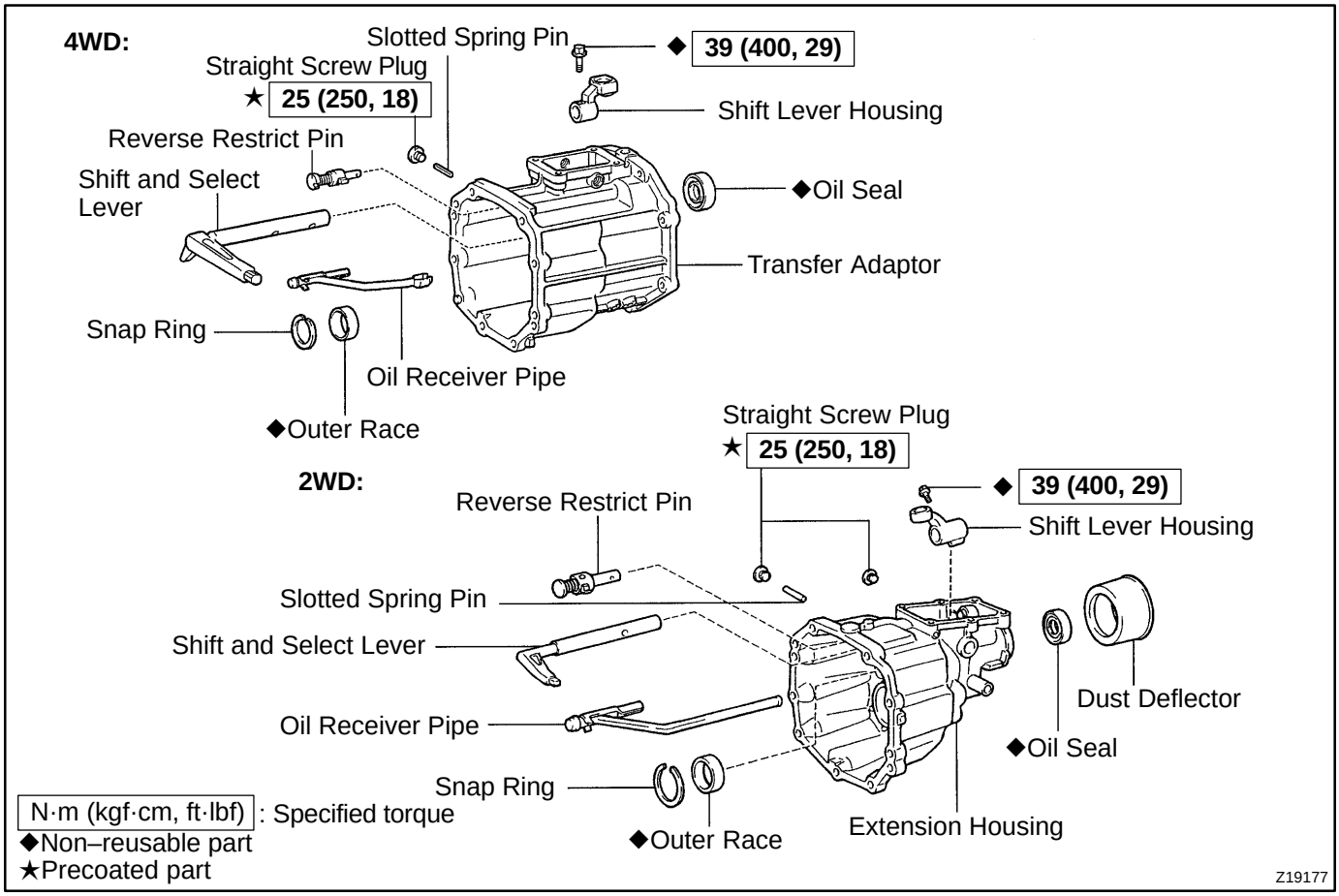

MT02N–01

REPLACEMENT

1. IF NECESSARY, REPLACE REVERSE RESTRICT PIN

(a) Remove the reverse restrict pin.
  (1) Using a hexagon wrench, remove the screw plug.
  (2) Using a pin punch and hammer, drive out the slotted spring pin.
  (3) Pull off the lever housing and slide out the shaft.

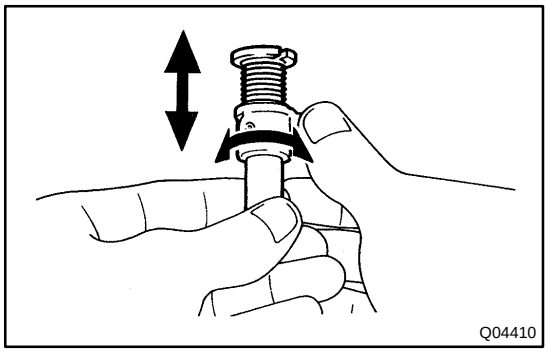
Q04410

(b) Inspect the reverse restrict pin.
Turn and push the reverse restrict pin by hand. Check it for smooth operation.

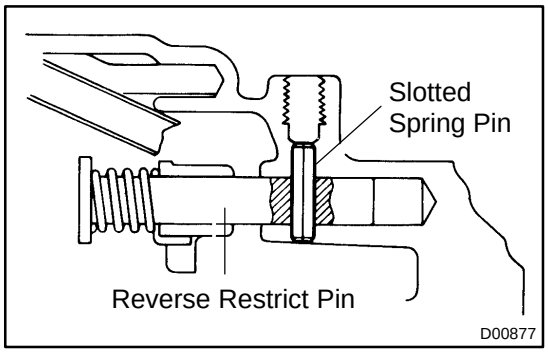

D00877

(c) Install the reverse restrict pin.
  (1) Install the lever housing.
  (2) Using a pin punch and hammer, drive in the slotted spring pin, as shown.
  (3) Apply sealant to the plug threads.

Sealant:
Part No.08833–00080, THREE BOND 1344, LOCTITE 242 or equivalent

  (4) Install and torque the screw plug.

Torque: 25 N·m (250 kgf·cm, 18 ft·lbf)

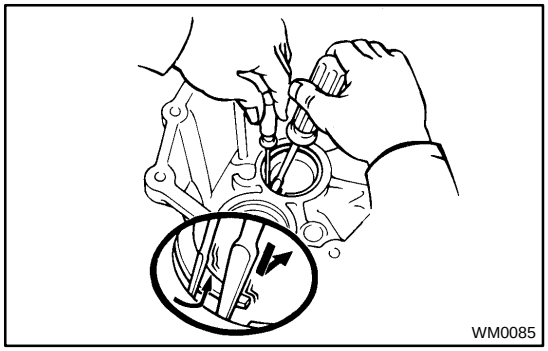
WM0085

2. IF NECESSARY, REPLACE REAR BEARING OUTER RACE

(a) Using 2 screwdrivers, remove the snap ring.

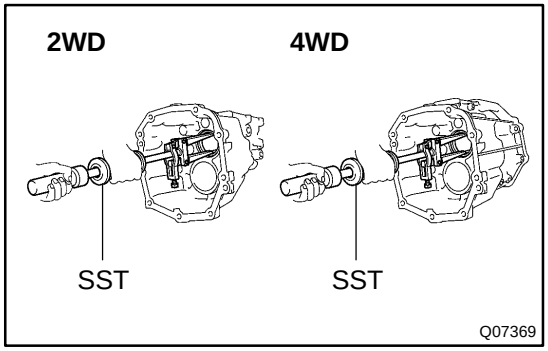

Q07369

(b) Using SST, remove the outer race.
SST 09308–00010

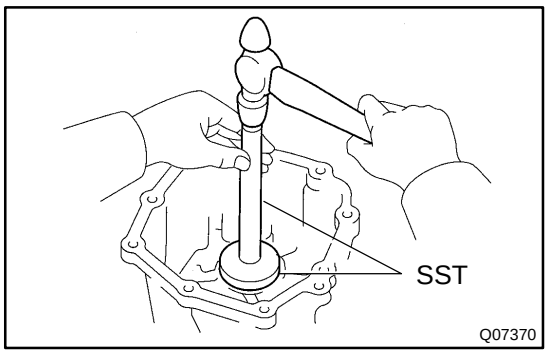

(c) Using SST, install a new outer race.
SST 09950–60010 (09951–00560), 09950–70010 (09951–07150)

(d) Using a screwdriver, install the snap ring.

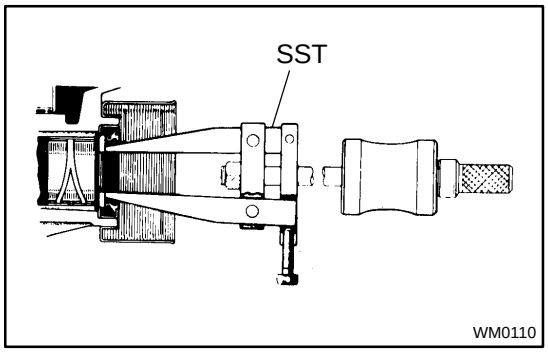

3. 2WD:
IF NECESSARY, REPLACE EXTENSION HOUSING OIL SEAL

(a) Using SST, remove the oil seal.
SST 09308–00010 or 09308–10010 w/ output shaft installed

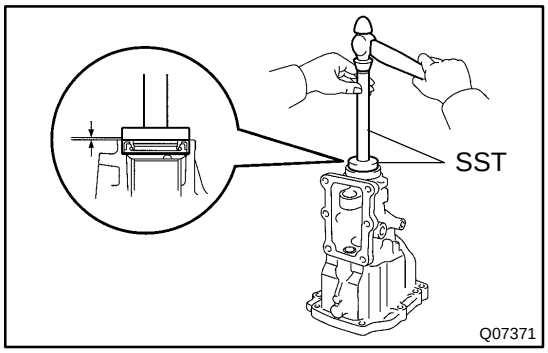

(b) Using SST and a hammer, drive in a new oil seal.
SST 09950–60010 (09951–00560), 09950–70010 (09951–07150)
Drive in depth: 0 ± 0.5 mm (0 ± 0.020 in.)

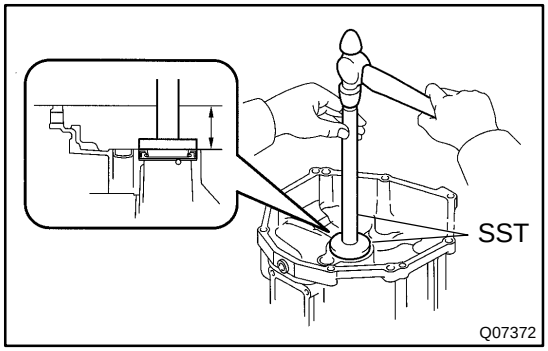

4. 4WD:
IF NECESSARY, REPLACE TRANSFER ADAPTOR OIL SEAL

(a) Using a screwdriver, pry out the oil seal.

(b) Using SST and a hammer, drive in a new oil seal.
SST 09950–60010 (09951–00560), 09950–70010 (09951–07150)
Drive in depth: 45.5 ± 0.5 mm (1.969 ± 0.020 in.)

FRONT BEARING RETAINER OIL SEAL

MT02K–01

COMPONENTS

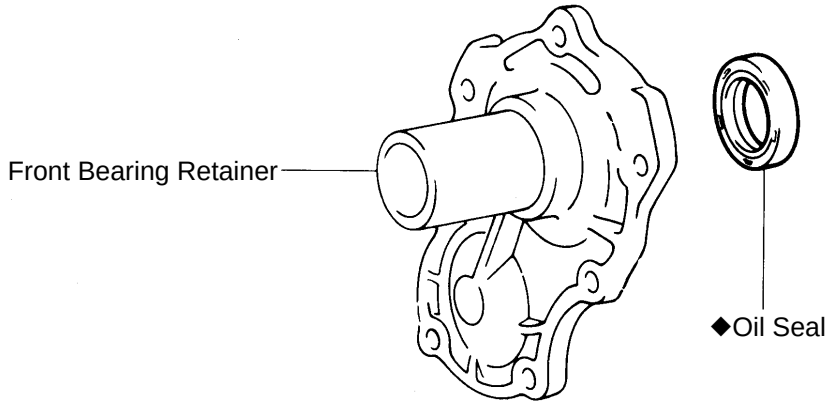

◆Non–reusable part

WM0295

MT02L–01

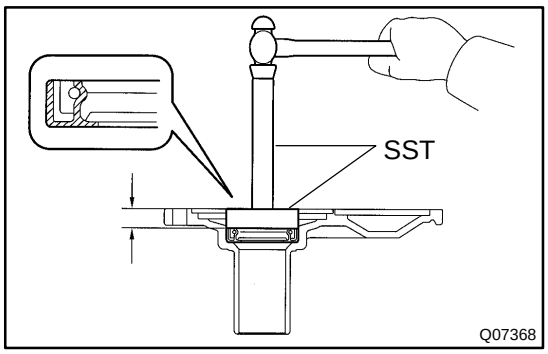

REPLACEMENT

IF NECESSARY, REPLACE FRONT BEARING RETAINER OIL SEAL

(a) Using a screwdriver, pry out the oil seal.

(b) Using SST and a press, install a new oil seal.

SST 09950–60010 (09951–00440), 09950–70010 (09951–07150)

Drive in depth: 12.2 ± 0.5 mm (0.480 ± 0.020 in.)

INPUT SHAFT

COMPONENTS

MT028–01

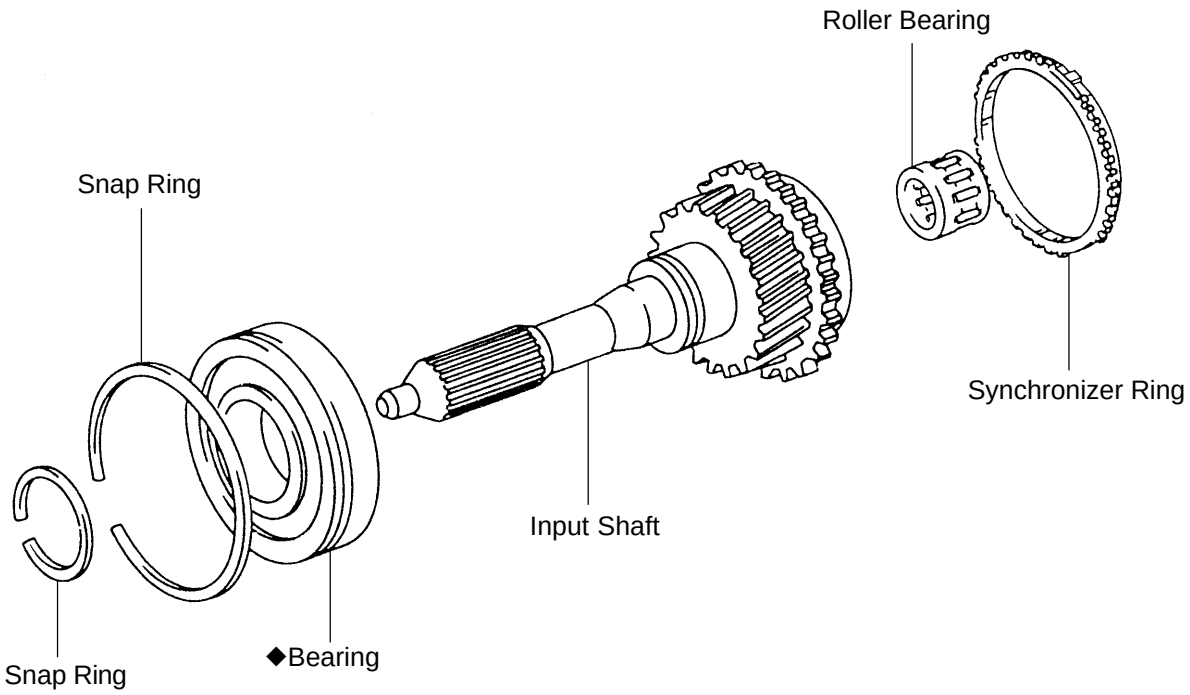

◆Non–reusable part

Q00884

MT029–01

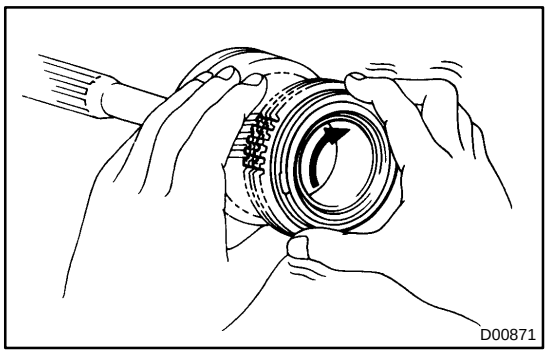

INSPECTION

INSPECT SYNCHRONIZER RING

(a) Check for wear or damage.

(b) Check for the braking effect of the synchronizer ring.
Turn the synchronizer ring in one direction while pushing it to the gear cone. Check that the ring locks.

If the braking effect is insufficient, apply a small amount of fine lapping compound between the synchronizer ring and gear cone. Lightly rub the synchronizer ring and gear cone together.

NOTICE:

Ensure the fine lapping compound is completely washed off after rubbing.

(c) Check again the braking effect of the synchronizer ring.

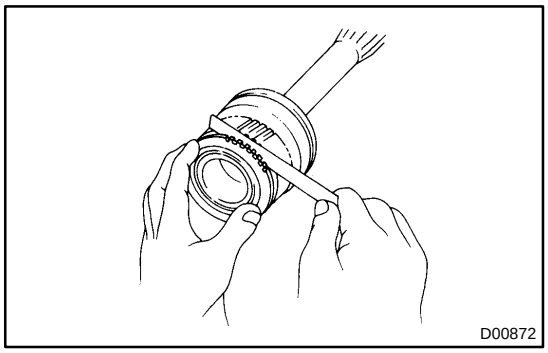

(d) Using a feeler gauge, measure the clearance between the synchronizer ring back and gear spline end.
Minimum clearance: 0.5 mm (0.020 in.)

If the clearance is less than the minimum, replace the synchronizer ring, and apply a small amount of the fine lapping compound on gear cone.

NOTICE:

Ensure the fine lapping compound is completely washed off after rubbing.

MT02A–01

REPLACEMENT

IF NECESSARY, REPLACE INPUT SHAFT BEARING

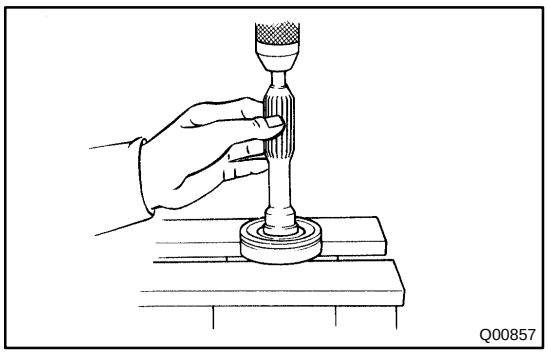

(a) Using a snap ring expander, remove the snap ring.

(b) Using a press, remove the bearing.

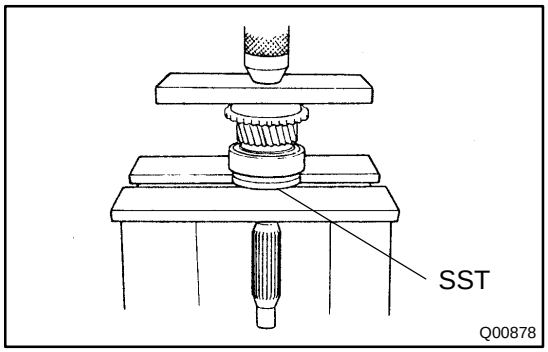

(c) Using SST and a press, install a new bearing.
SST 09506–35010

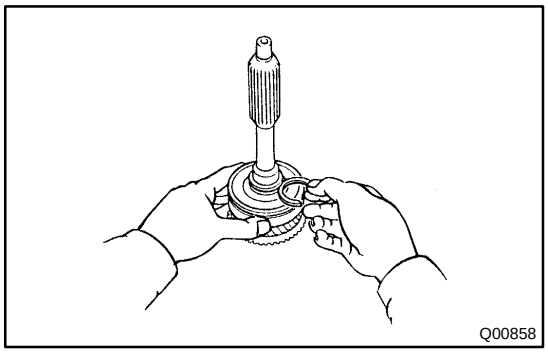

(d) Select a snap ring that allows the minimum axial play.

Mark	Thickness mm (in.)
1	2.05 – 2.10 (0.0807 – 0.0827)
2	2.10 – 2.15 (0.0827 – 0.0846)
3	2.15 – 2.20 (0.0846 – 0.0866)
4	2.20 – 2.25 (0.0866 – 0.0886)
5	2.25 – 2.30 (0.0886 – 0.0906)
11	2.30 – 2.35 (0.0906 – 0.0925)
12	2.35 – 2.40 (0.0925 – 0.0945)

(e) Using a snap ring expander, install the snap ring.

MANUAL TRANSMISSION ASSEMBLY

MT025–01

COMPONENTS

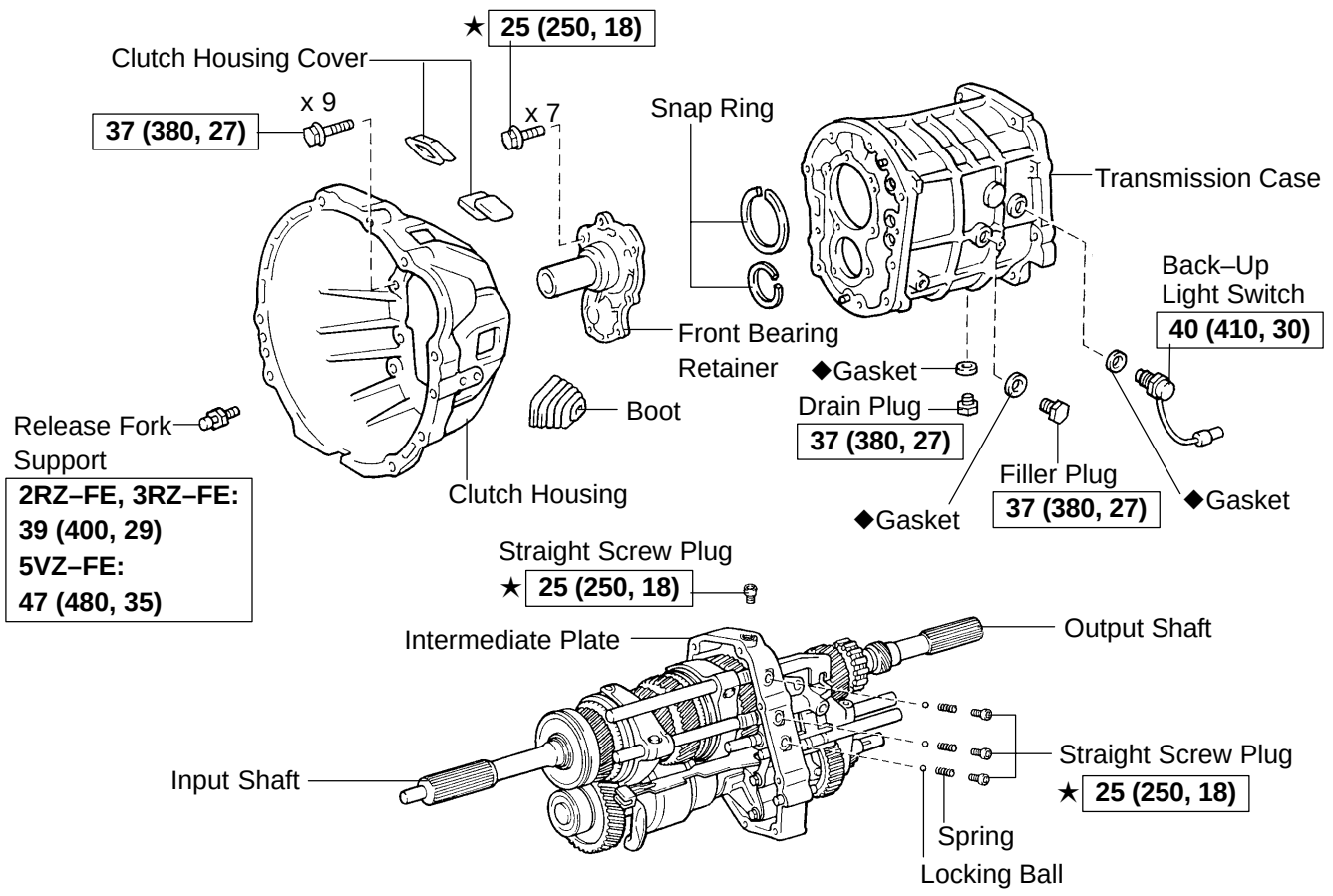

2WD:

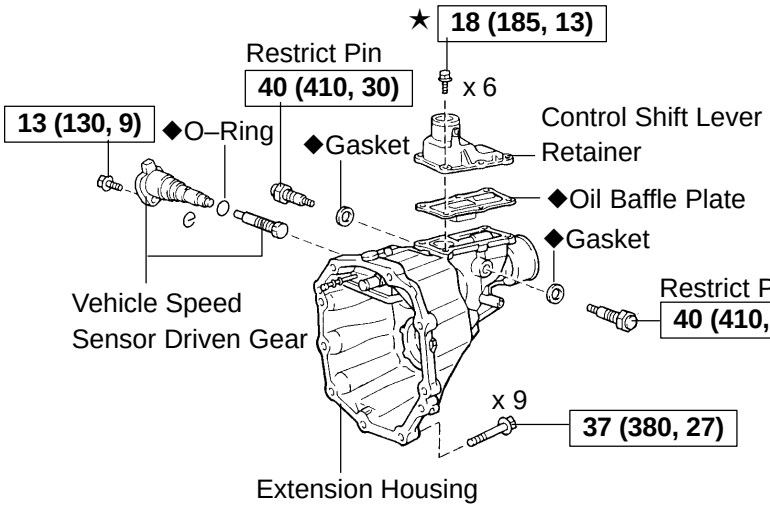

4WD:

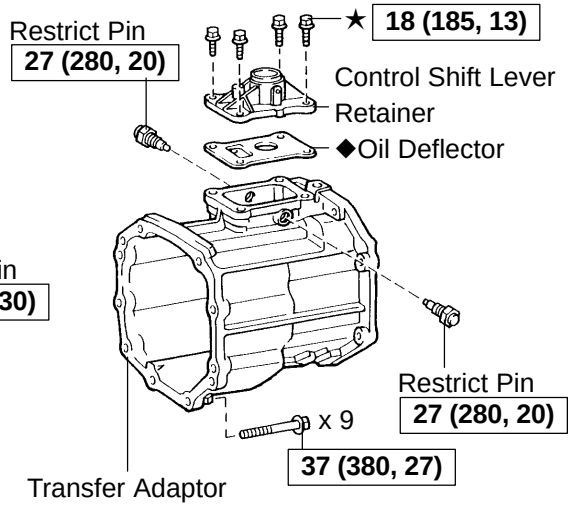

N·m (kgf·cm, ft·lbf) : Specified torque
◆Non–reusable part
★Precoated part

D00550

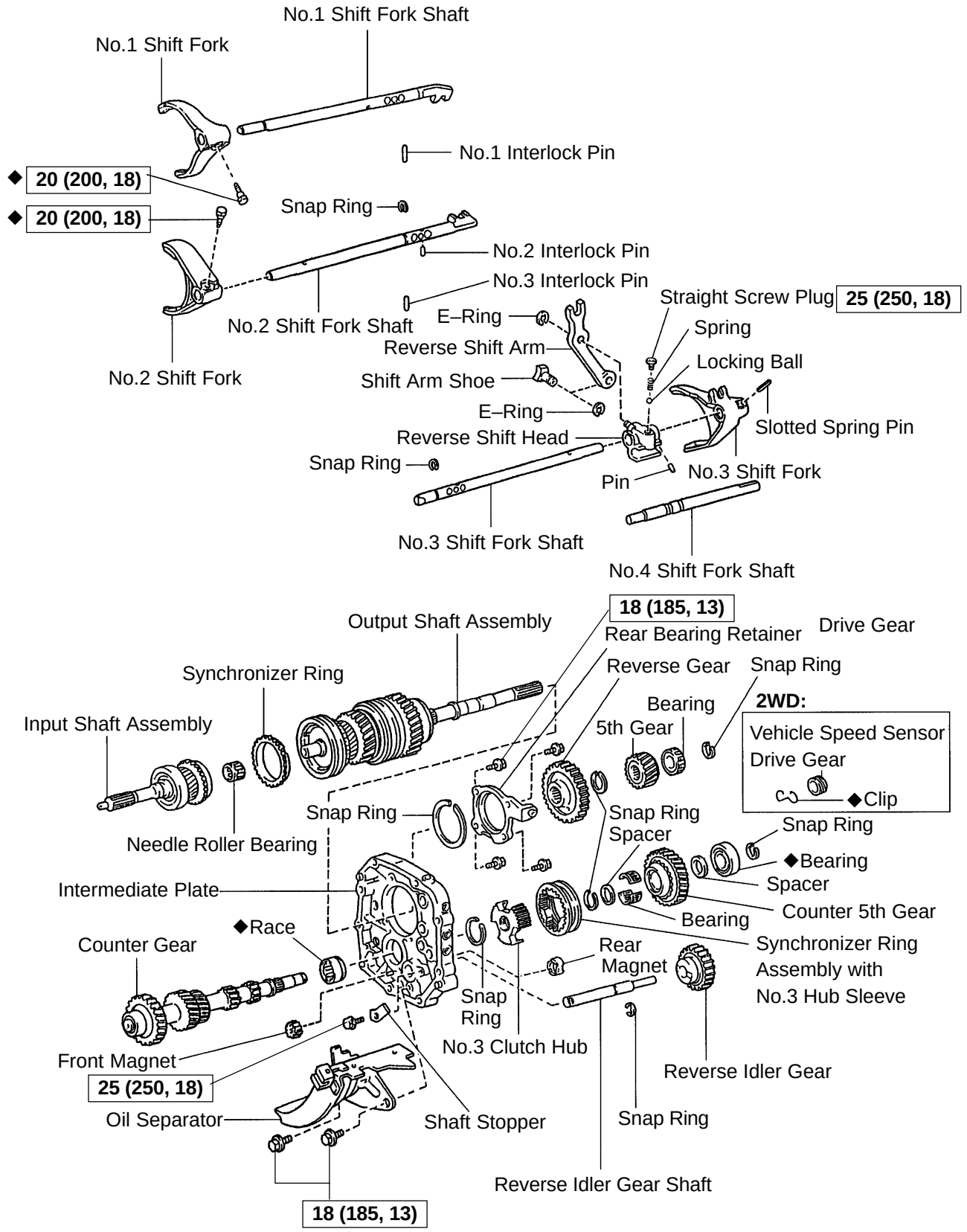

N·m (kgf·cm, ft·lbf) : Specified torque

◆Non–reusable part

Z19176

MT026–02

DISASSEMBLY

1. REMOVE BACK–UP LIGHT SWITCH

Torque: 40 N·m (410 kgf·cm, 30 ft·lbf)

2. 2WD:

REMOVE VEHICLE SPEED SENSOR DRIVEN GEAR

Remove the bolt and driven gear.

Torque: 13 N·m (130 kgf·cm, 9 ft·lbf)

3. REMOVE CLUTCH HOUSING

Remove the 9 bolts and clutch housing.

Torque: 37 N·m (380 kgf·cm, 27 ft·lbf)

4. REMOVE CONTROL SHIFT LEVER RETAINER

(a) Remove the 6 (2WD) or 4 (4WD) bolts.

Sealant:

Part No.08833–00080, THREE BOND 1344, LOCTITE 242 or equivalent

Torque: 18 N·m (185 kgf·cm, 13 ft·lbf)

(b) Remove the retainer and oil baffle plate (2WD) or oil deflector (4WD).

5. 2WD:

REMOVE 2 RESTRICT PINS AND GASKETS

HINT:

At the time of reassembly, please refer to the following item.
Install the black pin on the reverse gear/5th gear side.

Torque: 40 N·m (410 kgf·cm, 30 ft·lbf)

6. 4WD:

REMOVE 2 RESTRICT PINS

HINT:

At the time of reassembly, please refer to the following item.
Install the black pin on the reverse gear/5th gear side.

Torque: 27 N·m (280 kgf·cm, 20 ft·lbf)

7. 2WD:

REMOVE EXTENSION HOUSING

(a) Remove the shift lever housing set bolt.

Torque: 39 N·m (400 kgf·cm, 29 ft·lbf)

(b) Remove the 9 bolts from the extension housing.

Torque: 37 N·m (380 kgf·cm, 27 ft·lbf)

(c) Using a plastic hammer, carefully tap the housing.

(d) Disengage the shift and select lever from the shift head.

(e) Pull out the extension housing.

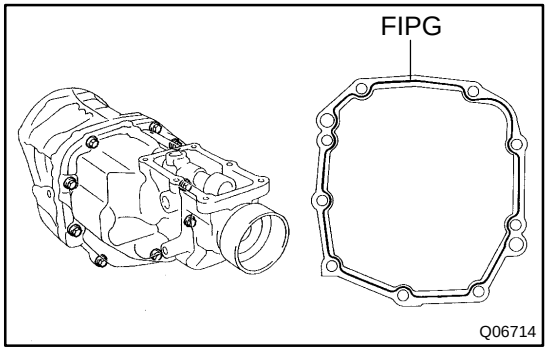

FIPG:

Part No. 08826–00090, THREE BOND 1281 or equivalent

8. 4WD:
REMOVE TRANSFER ADAPTOR

(a) Remove the shift lever housing set bolt.
Torque: 39 N·m (400 kgf·cm, 29 ft·lbf)

(b) Remove the 9 bolts from the transfer adaptor.
Torque: 37 N·m (380 kgf·cm, 27 ft·lbf)

(c) Using a plastic hammer, carefully tap the adaptor.

(d) Disengage the shift and select lever from the shift head.

(e) Pull out the transfer adaptor.

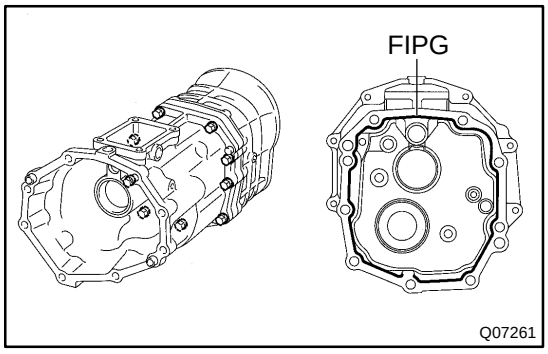

FIPG:
Part No. 08826–00090, THREE BOND 1281 or equivalent

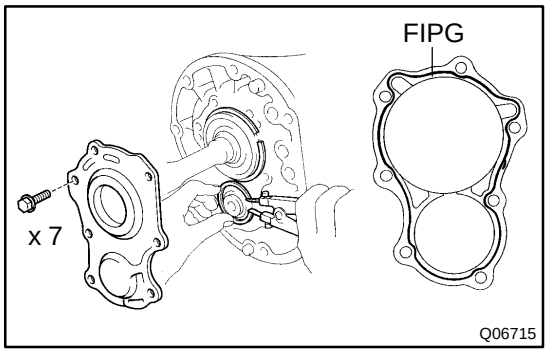

9. REMOVE FRONT BEARING RETAINER AND BEARING SNAP RING

(a) Remove the 7 bolts.
Sealant:
Part No.08833–00080, THREE BOND 1344, LOCTITE 242 or equivalent
Torque: 25 N·m (250 kgf·cm, 18 ft·lbf)

(b) Remove the front bearing retainer.
FIPG:
Part No. 08826–00090, THREE BOND 1281 or equivalent

(c) Using a snap ring expander, remove the 2 snap rings.

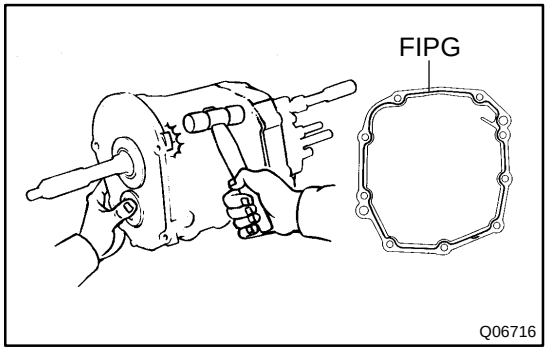

10. SEPARATE INTERMEDIATE PLATE FROM TRANSMISSION CASE

(a) Using a plastic hammer, carefully tap the transmission case.

(b) Pull off the transmission case from the intermediate plate.

HINT:
At the time of reassembly, please refer to the following item.
Align each bearing outer race and each shift fork shaft end with the case holes.

FIPG:
Part No. 08826–00090, THREE BOND 1281 or equivalent

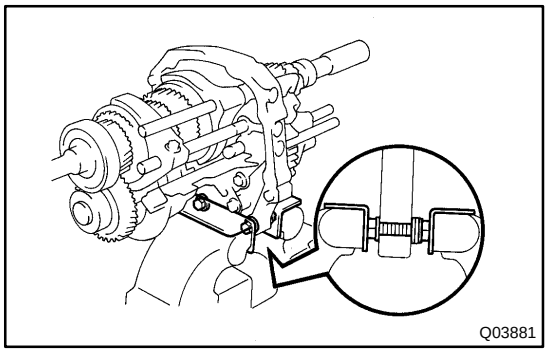
Q03881

11. MOUNT INTERMEDIATE PLATE IN VISE

(a) Use the 2 long clutch housing bolts, plate washers and suitable nuts, as shown.

HINT:

Increase or decrease plate washers so that the bolt tip does not protrude from the nut.

(b) Mount the intermediate plate in a vise.

12. REMOVE OIL SEPARATOR

Remove the 2 bolts and oil separator.

Torque: 18 N·m (185 kgf·cm, 13 ft·lbf)

13. REMOVE FRONT MAGNET

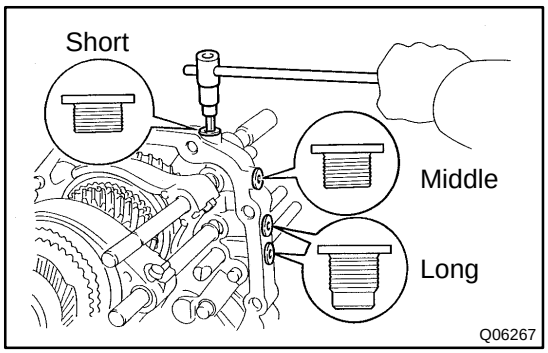

Q06267

14. REMOVE LOCKING BALL AND SPRING

(a) Using a hexagon wrench, remove the 4 straight screw plugs.

Sealant:
Part No.08833–00080, THREE BOND 1344, LOCTITE 242 or equivalent
Torque: 25 N·m (250 kgf·cm, 18 ft·lbf)

(b) Using a magnetic finger, remove the 3 springs and balls.

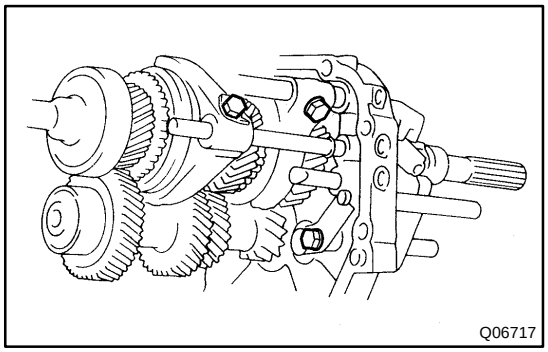
Q06717

15. REMOVE SHIFT FORK, SHIFT FORK SHAFT AND REVERSE IDLER GEAR

(a) Remove the set bolt of the No.1 and No.2 shift forks.
Torque: 20 N·m (200 kgf·cm, 14 ft·lbf)

(b) Remove the bolt and reverse idler gear shaft stopper.
Torque: 25 N·m (250 kgf·cm, 18 ft·lbf)

(c) Remove the reverse idler gear and shaft with the snap ring.

(d) Remove the No.1 shift fork and shaft.

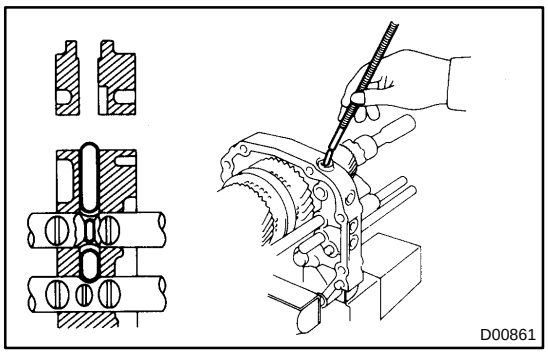

(e) Using a magnetic finger, remove the No.1 and No.2 interlock pins.

HINT:

At the time of reassembly, please refer to the following item.

Apply MP grease to the No.1 and No.2 interlock pins.

(f) Using 2 screwdrivers and a hammer, tap out the No. 2 shift fork shaft snap ring.

(g) Remove the No.2 shift fork and shaft.

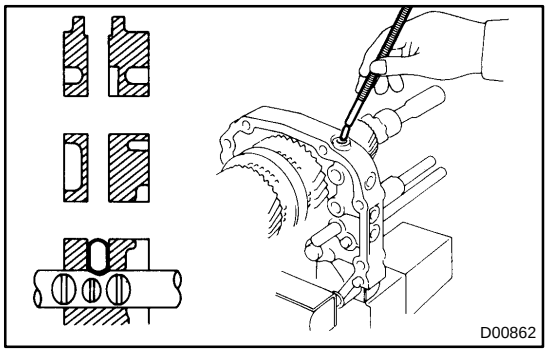

(h) Using a magnetic finger, remove the No.3 interlock pin.

HINT:

At the time of reassembly, please refer to the following item.

Apply MP grease to the No.3 interlock pin.

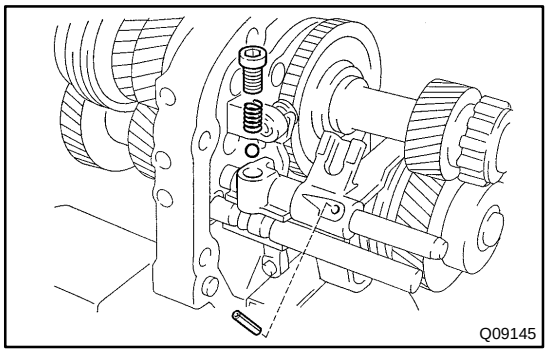

(i) Using a pin punch and hammer, drive out the No.3 shift fork pin.

(j) Using a hexagon wrench, remove the plug.

Torque: 25 N·m (250 kgf·cm, 18 ft·lbf)

(k) Using a magnetic finger, remove the spring and ball.

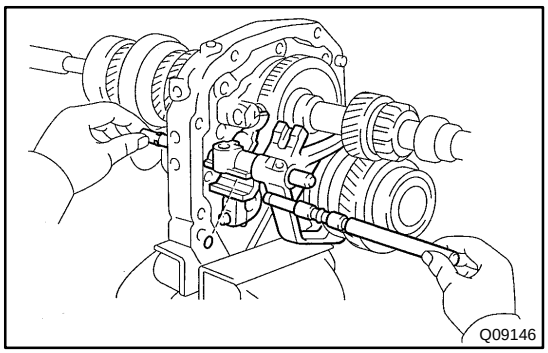

(l) Pull out the No.4 shift fork shaft.

(m) Remove the interlock pin.

HINT:

At the time of reassembly, please refer to the following item.

Apply MP grease to the pin.

(n) Remove the No.3 shift fork, fork shaft and reverse shift arm with the snap ring.

HINT:

At the time of reassembly, please refer to the following item.

Align the No.3 shift fork with the No.3 hub sleeve groove, put the reverse shift arm into the pivot of bearing retainer and align the reverse shift arm shoe with the reverse idler gear groove.

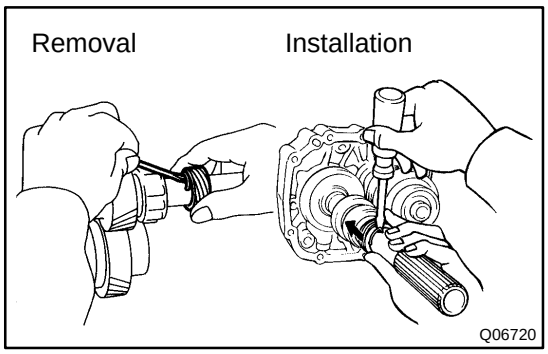

16. 2WD:
REMOVE VEHICLE SPEED SENSOR DRIVE GEAR

Using a screwdriver, pry out both ends of the clip and remove the drive gear.

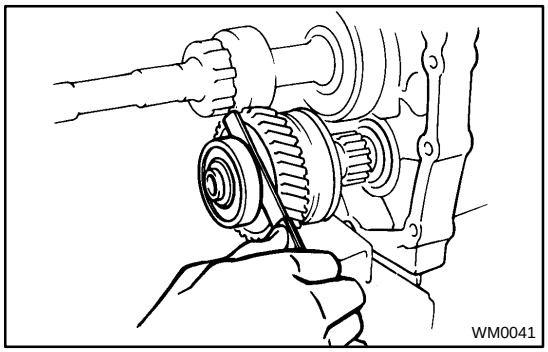

17. INSPECT COUNTER 5TH GEAR THRUST CLEARANCE

Using a feeler gauge, measure the counter 5th gear thrust clearance.

Standard clearance:
0.10–0.41 mm (0.0039–0.0161 in.)
Maximum clearance:
0.46 mm (0.0181 in.)

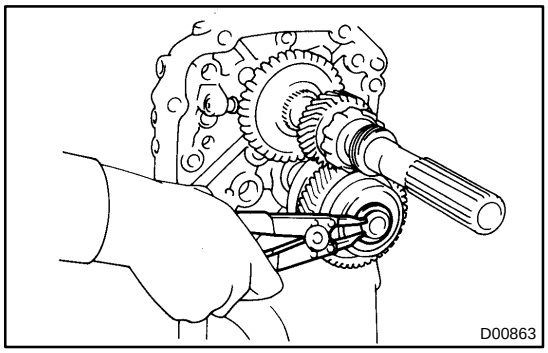

18. REMOVE COUNTER REAR BEARING, SPACER, COUNTER 5TH GEAR AND NEEDLE ROLLER BEARING

(a) Using a snap ring expander, remove the snap ring.

HINT:

At the time of reassembly, please refer to the following item.

Select a snap ring that allows the minimum axial play.

Mark	Thickness mm (in.)
1	1.90 – 1.95 (0.0748 – 0.0768)
2	1.96 – 2.01 (0.0772 – 0.0791)
3	2.02 – 2.07 (0.0795 – 0.0815)
4	2.08 – 2.13 (0.0819 – 0.0839)
5	2.14 – 2.19 (0.0843 – 0.0862)
6	2.20 – 2.25 (0.0866 – 0.0886)
7	2.26 – 2.31 (0.0890 – 0.0909)

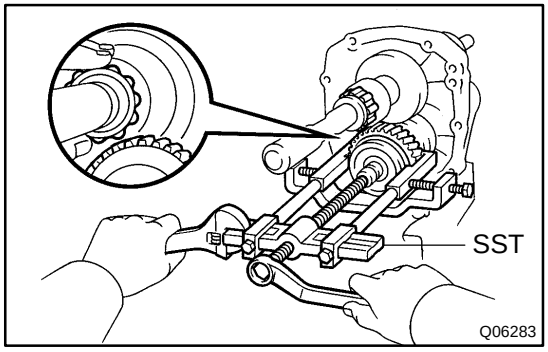

(b) Using SST, remove the rear bearing, spacer, 5th gear and bearing.

SST 09950–40011

NOTICE:

Be careful not to catch the output shaft rear bearing roller on the counter 5th gear.

(c) Remove the spacer.

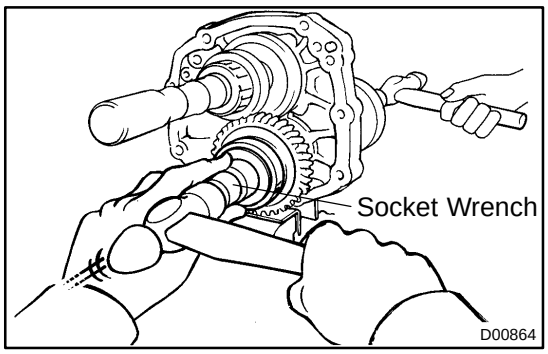

HINT:
At the time of reassembly, please refer to the following items.
- Install the counter 5th gear with the 5th gear gaps aligned with the synchronizer cone ring pin.
- Using a socket wrench and hammer, drive in the bearing.
- When driving in the bearing, support the counter shaft in front with a 1.4 – 2.3 kg (3 – 5 lb) hammer or equivalent.

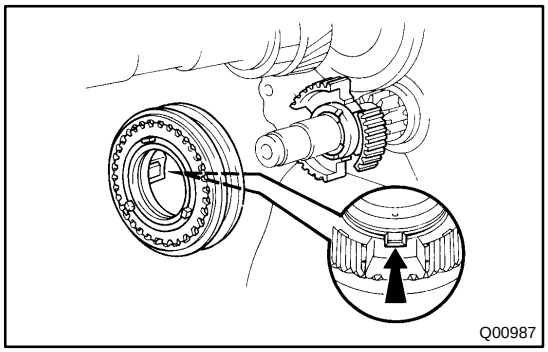

19. REMOVE SYNCHRONIZER RING ASSEMBLY WITH NO.3 HUB SLEEVE AND NO.3 CLUTCH HUB

(a) Remove the synchronizer ring assembly with the No.3 hub sleeve from the No.3 clutch hub.

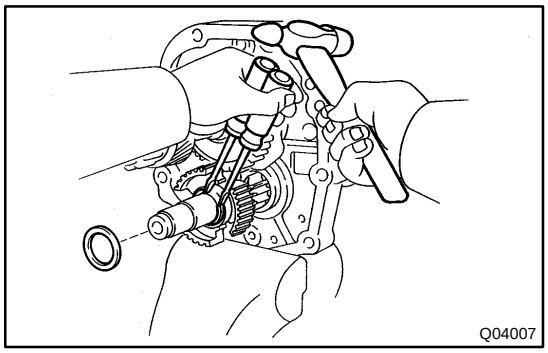

(b) Remove the spacer.

(c) Using 2 screwdrivers and a hammer, tap out the snap ring.

HINT:
At the time of reassembly, please refer to the following item.
Select a snap ring that allows the minimum axial play.

Mark	Thickness mm (in.)
2	2.06 – 2.11 (0.0811 – 0.0831)
3	2.12 – 2.17 (0.0835 – 0.0854)
4	2.18 – 2.23 (0.0858 – 0.0878)
5	2.24 – 2.29 (0.0882 – 0.0902)

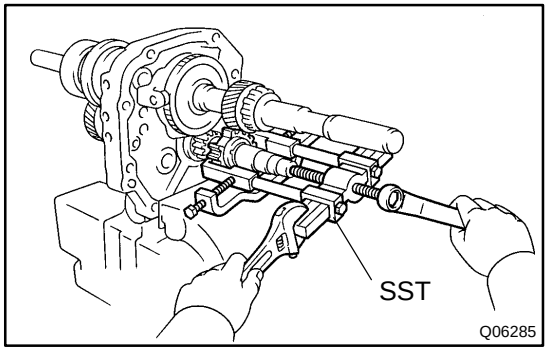

(d) Using SST, remove the No.3 clutch hub.
SST 09950–40012

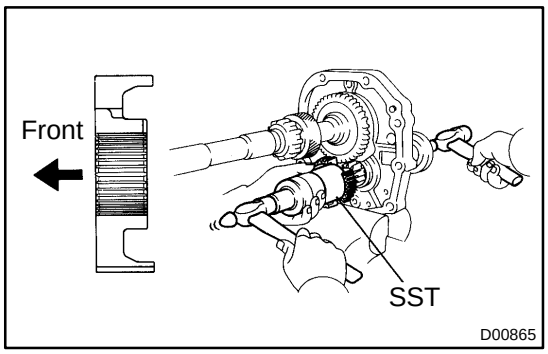

HINT:
At the time of reassembly, please refer to the following items.
- Using SST and a hammer, drive in the No.3 clutch hub.
  SST 09316–60011 (09316–00011, 09316–00071)
- When installing the No.3 clutch hub, support the counter shaft in front with a 1.4 – 2.3 kg (3 – 5 lb) hammer or equivalent.

20. REMOVE REAR MAGNET

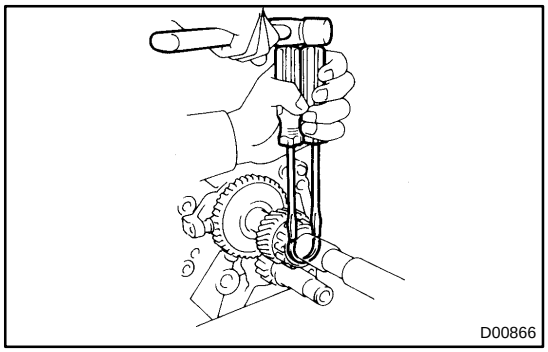

21. REMOVE OUTPUT SHAFT REAR BEARING AND 5TH GEAR

(a) Using 2 screwdrivers and a hammer, tap out the snap ring.

HINT:
At the time of reassembly, please refer to the following item.
Select a snap ring that allows the minimum axial play.

Mark	Thickness mm (in.)
8	2.31 – 2.36 (0.0909 – 0.0929)
9	2.37 – 2.42 (0.0933 – 0.0953)
10	2.43 – 2.48 (0.0957 – 0.0976)
11	2.49 – 2.54 (0.0980 – 0.1000)
12	2.55 – 2.60 (0.1004 – 0.1024)
13	2.61 – 2.66 (0.1028 – 0.1047)
14	2.68 – 2.73 (0.1055 – 0.1075)
15	2.74 – 2.79 (0.1079 – 0.1098)

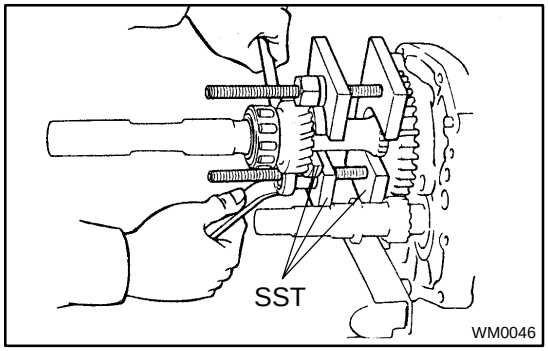

(b) Using SST, remove the rear bearing and 5th gear.
SST 09312–20011 (09313–00030, 09313–00040, 09313–00050)

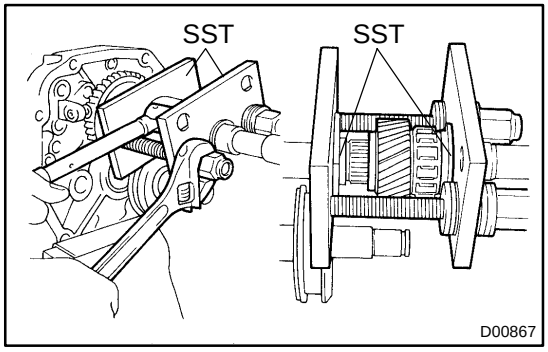

HINT:
At the time of reassembly, please refer to the following item.
Using SST, install the 5th gear and rear bearing.
SST 09312–20011 (09313–00010, 09313–00030, 09313–00040, 09313–00050)

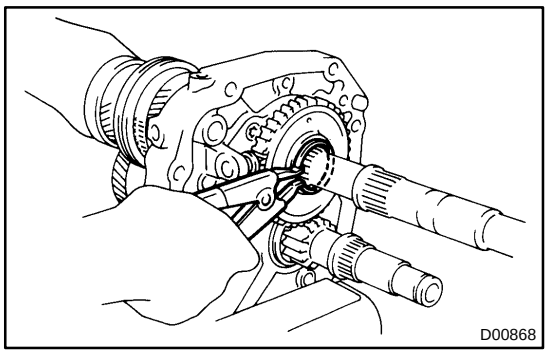

22. REMOVE REVERSE GEAR

(a) Using a snap ring expander, remove the snap ring.

HINT:

At the time of reassembly, please refer to the following item.

Select a snap ring that allows the minimum axial play.

Mark	Thickness mm (in.)
5	2.25 – 2.30 (0.0886 – 0.0906)
11	2.30 – 2.35 (0.0906 – 0.0925)
12	2.35 – 2.40 (0.0925 – 0.0945)
13	2.40 – 2.45 (0.0945 – 0.0965)
14	2.45 – 2.50 (0.0965 – 0.0984)
15	2.50 – 2.55 (0.0984 – 0.1004)
16	2.55 – 2.60 (0.1004 – 0.1024)
17	2.61 – 2.66 (0.1028 – 0.1047)
18	2.67 – 2.72 (0.1051 – 0.1071)
19	2.73 – 2.78 (0.1075 – 0.1094)
20	2.79 – 2.84 (0.1098 – 0.1118)
21	2.85 – 2.90 (0.1122 – 0.1142)
22	2.91 – 2.96 (0.1146 – 0.1165)
23	2.97 – 3.02 (0.1169 – 0.1189)

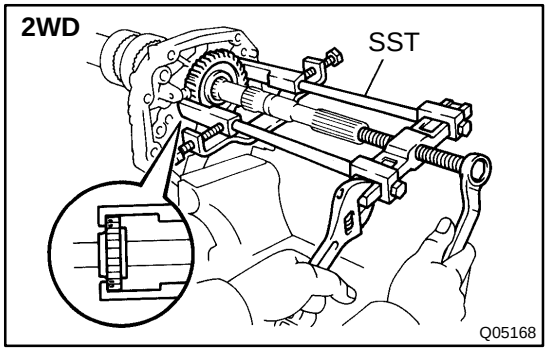

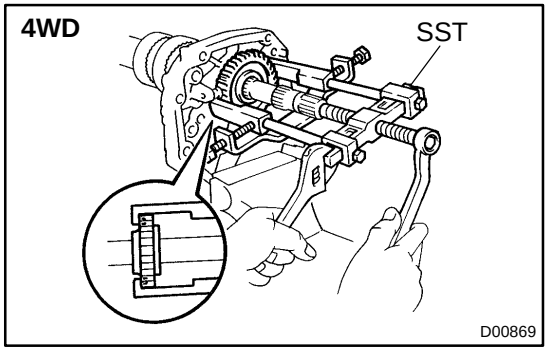

(b) Using SST, remove the reverse gear.

SST 09950–40011

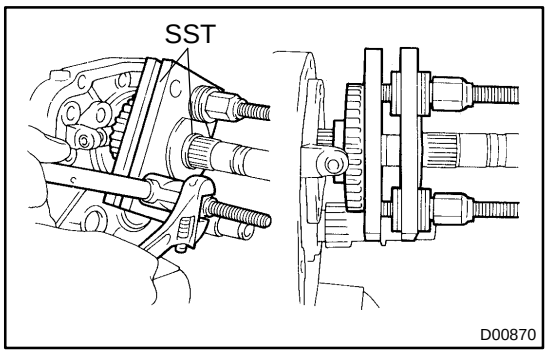

HINT:
At the time of reassembly, please refer to the following item.
Using SST, install the reverse gear.
SST 09312–20011 (09313–00030, 09313–00040, 09313–00050)

23. REMOVE REAR BEARING RETAINER

(a) Using a torx socket wrench (T40), unscrew the 4 torx screws and remove the rear bearing retainer.
Torque: 18 N·m (185 kgf·cm, 13 ft·lbf)

(b) Using a snap ring expander, remove the 2 snap rings.

HINT:
At the time of reassembly, please refer to the following item.
Be sure the snap ring is flush with the intermediate plate surface.

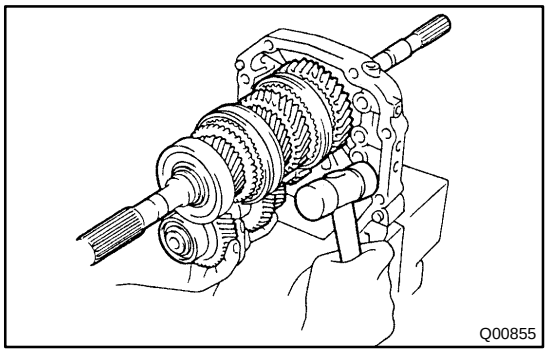

24. REMOVE OUTPUT SHAFT AND COUNTER GEAR FROM INTERMEDIATE PLATE

(a) Remove the output shaft, input shaft and counter gear as a unit from the intermediate plate by pulling on the counter gear and tapping on the intermediate plate with a plastic hammer.

(b) Remove the input shaft from the output shaft.

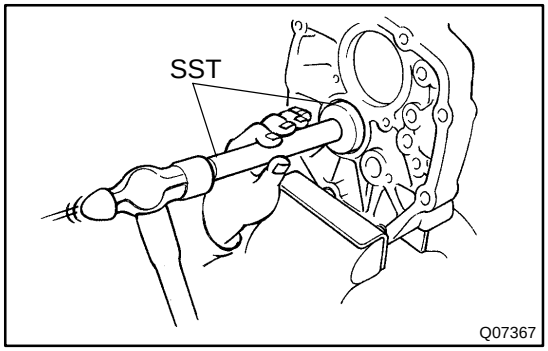

HINT:
At the time of reassembly, please refer to the following items.
- Before installing the output shaft, use SST to remove the counter gear center bearing outer race.
  SST 09950–60010 (09951–00510), 09950–70010 (09951–07150)
- Install the outer race after installing the counter gear.
- Install the output shaft into the intermediate plate by pulling on the output shaft and tapping on the intermediate plate.

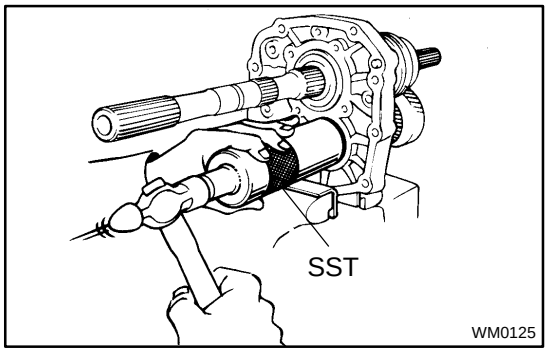

HINT:
At the time of reassembly, please refer to the following items.
- Apply gear oil to the needle roller bearing.
- Install the needle roller bearing to the input shaft.
- Install the input shaft and counter gear together.
- Using SST and a hammer, install a new counter gear center bearing outer race.
  SST 09316–60011 (09316–00011)
- Be careful not to damage the bearing rollers.

MT027–01

REASSEMBLY

Reassembly is in the reverse order of disassembly (See page MT–15).

HINT:

Coat all of the sliding and rotating surfaces with gear oil before reassembly.

MANUAL TRANSMISSION SYSTEM

MT01X–01

PRECAUTION

When working with FIPG material, you must observe the following items.

- **Using a razor blade and gasket scraper, remove all the old FIPG material from the gasket surfaces.**
- **Thoroughly clean all components to remove all the loose material.**
- **Clean both sealing surfaces with a non–residue solvent.**
- **Apply FIPG in an approx. 1 mm (0.04 in.) wide bead along the sealing surface.**
- **Parts must be assembled within 10 minutes of application. Otherwise, the FIPG material must be removed and reapplied.**

MANUAL TRANSMISSION UNIT (2WD)

MT01Z–01

COMPONENTS

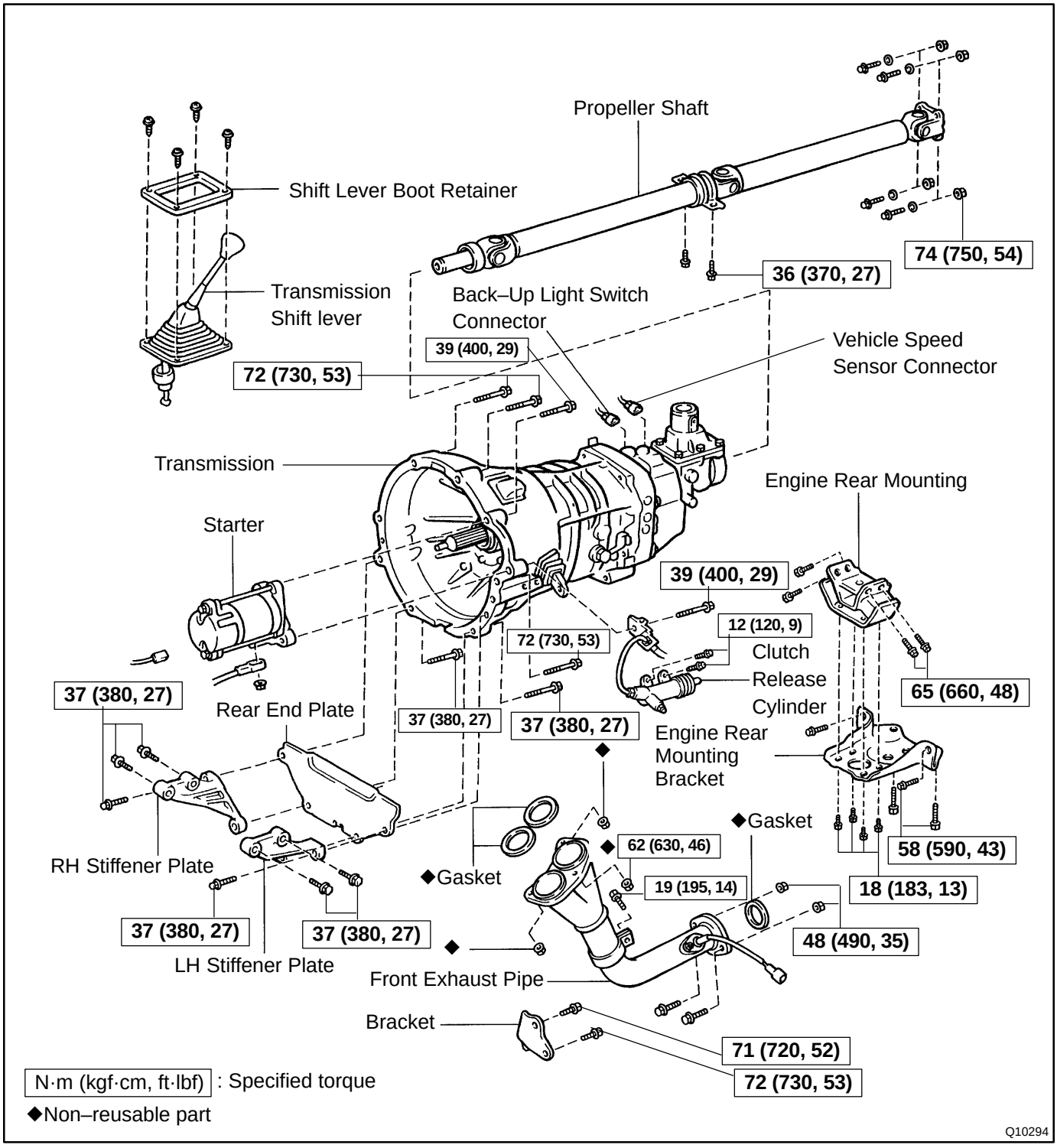

MT021–01

INSTALLATION

Installation is in the reverse order of removal (See page MT–4).

HINT:

After installation, do the road test.

MT020–01

REMOVAL

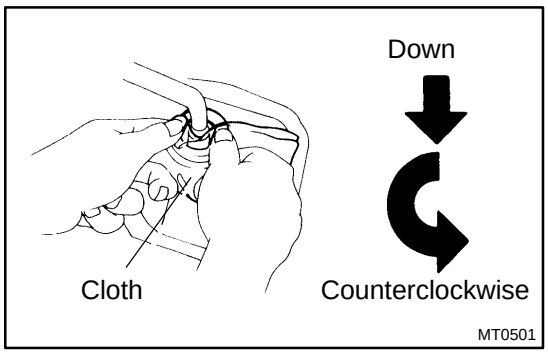

1. REMOVE TRANSMISSION SHIFT LEVER

(a) Remove the 4 screws and shift lever boot retainer.
(b) Cover the shift lever cap with a cloth.
(c) Pressing down on the shift lever cap and rotate it counterclockwise to remove.
(d) Pull out the shift lever.

HINT:
At the time of installation, please refer to the following item.
Apply MP grease to the tip of the shift lever.

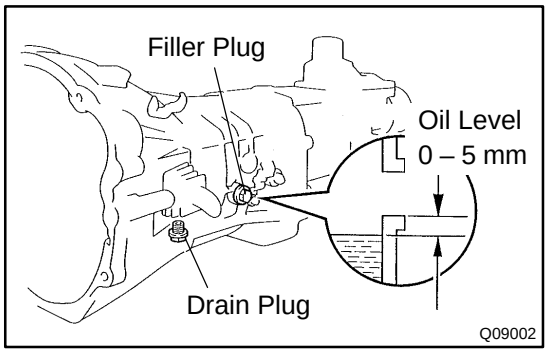

2. RAISE VEHICLE AND DRAIN TRANSMISSION OIL
Oil grade: API GL–4 or GL–5
Viscosity: SAE 75W–90
Capacity: 2.6 liters (2.7 US qts, 2.3 lmp. qts)
Torque: 37 N·m (380 kgf·cm, 27 ft·lbf)

3. REMOVE PROPELLER SHAFT
(See page PR–2)

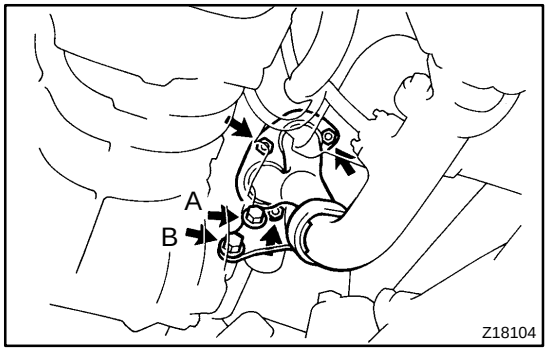

4. REMOVE FRONT EXHAUST PIPE

(a) Disconnect the 2 heated oxygen sensor connectors.
(b) Remove the 2 bolts, nuts and gasket.
Torque: 48 N·m (490 kgf·cm, 35 ft·lbf)
(c) Loosen the clamp bolt and disconnect the clamp from the support bracket.
Torque: 19 N·m (195 kgf·cm, 14 ft·lbf)
(d) Remove the 2 bolts and bracket.
Torque:
Bolt A: 71 N·m (720 kgf·cm, 52 ft·lbf)
Bolt B: 72 N·m (730 kgf·cm, 53 ft·lbf)
(e) Remove the 3 nuts, front exhaust pipe and 2 gaskets.
Torque: 62 N·m (630 kgf·cm, 46 ft·lbf)

5. DISCONNECT VEHICLE SPEED SENSOR AND BACK–UP LIGHT SWITCH CONNECTORS

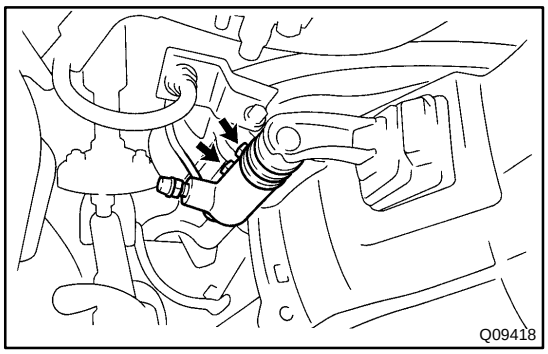

6. DISCONNECT CLUTCH RELEASE CYLINDER

Remove the 2 bolts and disconnect the release cylinder.

Torque: 12 N·m (120 kgf·cm, 9 ft·lbf)

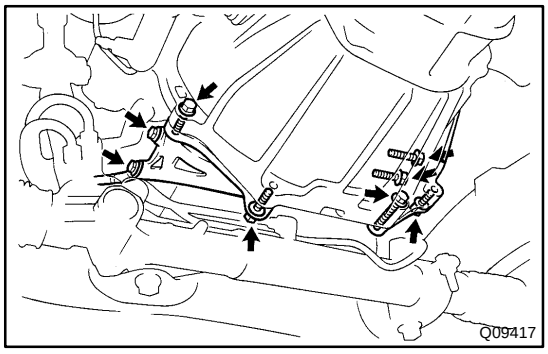

7. REMOVE REAR END PLATE

Remove the 8 bolts, ground cable, LH and RH stiffener plates and rear end plate.

Torque: 37 N·m (380 kgf·cm, 27 ft·lbf)

8. JACK UP TRANSMISSION SLIGHTLY

Using a transmission jack, support the transmission.

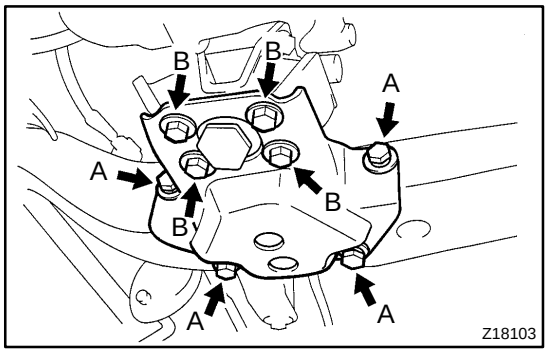

9. REMOVE ENGINE REAR MOUNTING BRACKET

Remove the 8 bolts and engine rear mounting bracket.

Torque:
Bolt A: 58 N·m (590 kgf·cm, 43 ft·lbf)
Bolt B: 18 N·m (183 kgf·cm, 13 ft·lbf)

10. REMOVE ENGINE REAR MOUNTING

Remove the 4 bolts and engine rear mounting.

Torque: 65 N·m (660 kgf·cm, 48 ft·lbf)

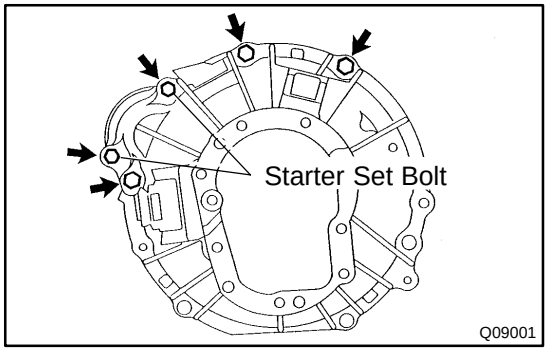

11. REMOVE STARTER

(a) Remove the set bolt of the starter on the lower side with the clutch line bracket.

Torque: 39 N·m (400 kgf·cm, 29 ft·lbf)

(b) Disconnect the connector and wire, and remove the set bolt of the starter on the upper side and starter.

Torque: 39 N·m (400 kgf·cm, 29 ft·lbf)

(c) Remove the 3 transmission mounting bolts from the engine.

Torque: 72 N·m (730 kgf·cm, 53 ft·lbf)

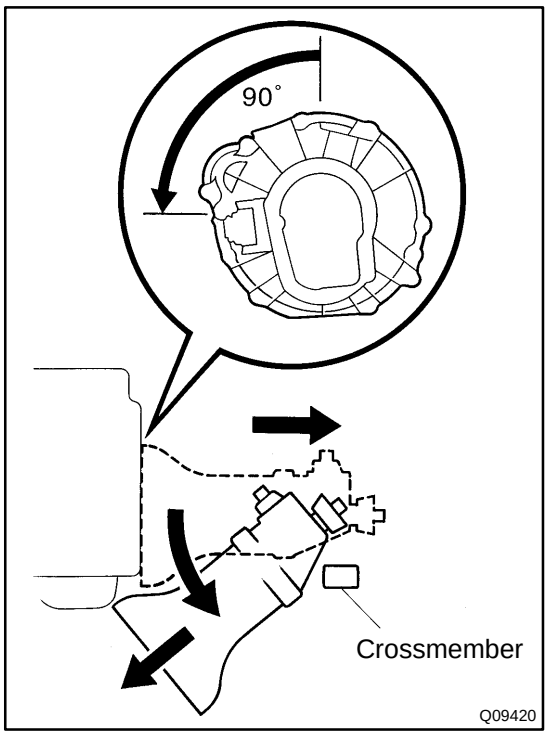

12. REMOVE TRANSMISSION

(a) Disconnect the wire harness from the transmission.
(b) Pull out the transmission toward the rear.
(c) Turn the transmission counterclockwise.
(d) Move the transmission backward again.
(e) Lower the front side of the transmission and remove it from the front side of the vehicle.

MANUAL TRANSMISSION UNIT (4WD)

COMPONENTS

MT022–01

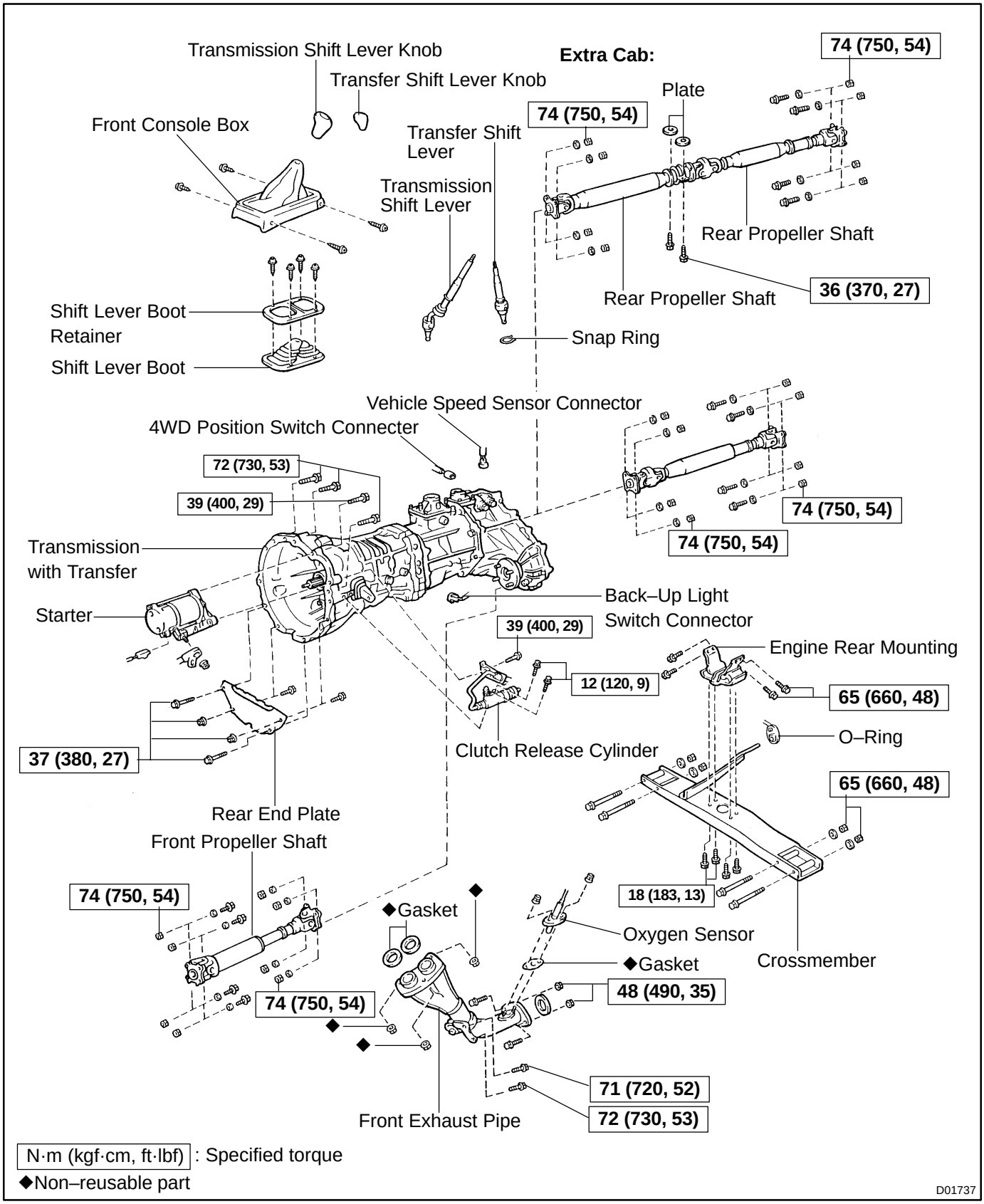

MT024–01

INSTALLATION

Installation is in the reverse order of removal (See page MT–9).

HINT:

After installation, do the road test.

MT023–02

REMOVAL

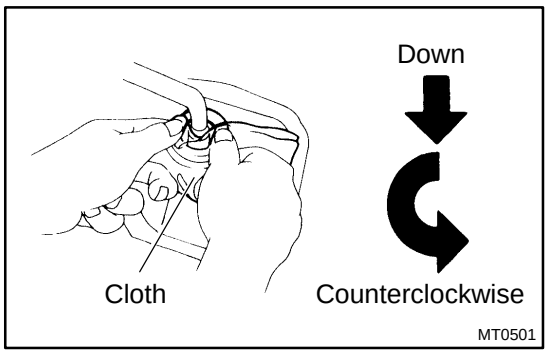

1. REMOVE TRANSMISSION SHIFT LEVER

(a) Remove the 4 screws and front console box.
(b) Remove the 4 screws and shift lever boot and retainer.
(c) Cover the shift lever cap with a cloth.
(d) Pressing down on the shift lever cap and rotate it counterclockwise to remove.
(e) Pull out the shift lever.

HINT:
At the time of installation, please refer to the following item.
Apply MP grease to the tip of the shift lever.

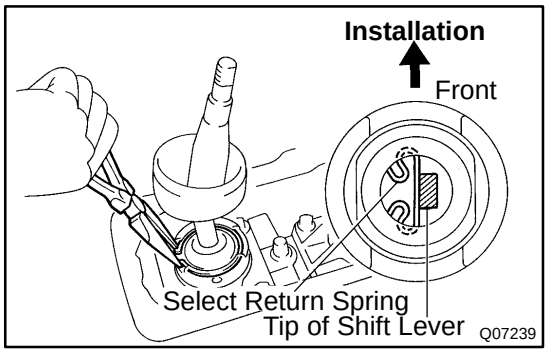

2. REMOVE TRANSFER SHIFT LEVER

Using pliers, remove the snap ring and pull out the shift lever.

HINT:
Shift the transfer shift lever to the ”H4” position.

HINT:
At the time of installation, please refer to the following item.
Apply MP grease to the tip of the shift lever.

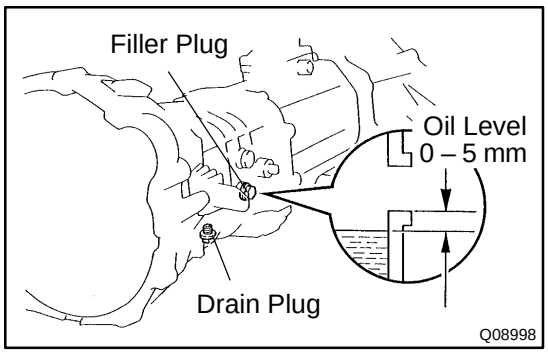

3. RAISE VEHICLE AND DRAIN TRANSMISSION OIL
Oil grade: API GL–4 or GL–5
Viscosity: SAE 75W–90
Capacity: 2.5 liters (2.6 US qts, 2.2 Imp. qts)
Torque: 37 N·m (380 kgf·cm, 27 ft·lbf)

4. REMOVE FRONT AND REAR PROPELLER SHAFTS
(See page PR–11)

5. DISCONNECT VEHICLE SPEED SENSOR, BACK–UP LIGHT SWITCH AND 4WD POSITION SWITCH CONNECTORS

6. DISCONNECT CLUTCH RELEASE CYLINDER

Remove the 2 bolts and disconnect the release cylinder.
Torque: 12 N·m (120 kgf·cm, 9 ft·lbf)

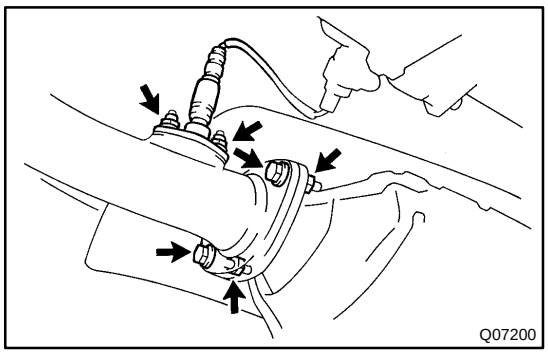
Q07200

7. REMOVE FRONT EXHAUST PIPE

(a) Remove the 2 nuts, gasket and oxygen sensor.

(b) Remove the 2 bolts, nuts and gasket.

Torque: 48 N·m (490 kgf·cm, 35 ft·lbf)

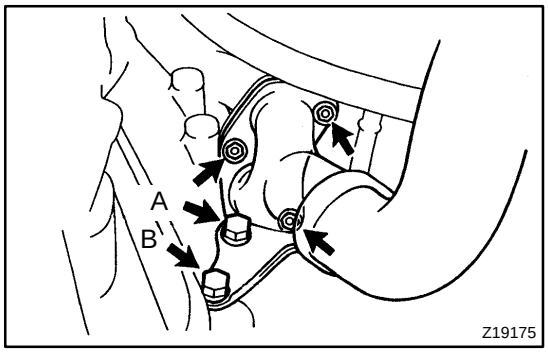

Z19175

(c) Remove the 2 set bolts of the front exhaust pipe bracket.

Torque:
71 N·m (720 kgf·cm, 52 ft·lbf)
72 N·m (730 kgf·cm, 53 ft·lbf)

(d) Remove the 3 nuts, front exhaust pipe and 2 gaskets.

Torque: 62 N·m (630 kgf·cm, 46 ft·lbf)

8. REMOVE REAR END PLATE

Remove the 4 bolts, 2 nuts and rear end plate.

Torque: 37 N·m (380 kgf·cm, 27 ft·lbf)

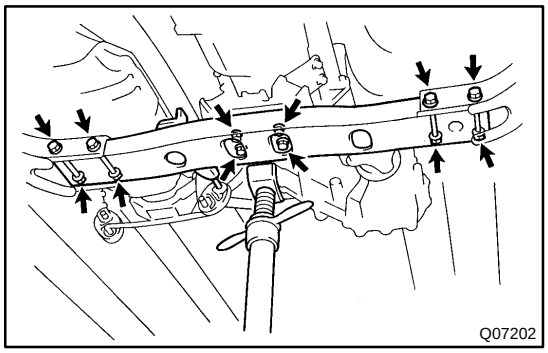
Q07202

9. REMOVE CROSSMEMBER

(a) Support the transmission rear side.

(b) Remove the 4 set bolts of the engine rear mounting.

Torque: 18 N·m (183 kgf·cm, 13 ft·lbf)

(c) Disconnect the O–ring and remove the 4 bolts, nuts and crossmember.

Torque: 65 N·m (660 kgf·cm, 48 ft·lbf)

10. REMOVE ENGINE REAR MOUNTING

Remove the 4 bolts and engine rear mounting.

Torque: 65 N·m (660 kgf·cm, 48 ft·lbf)

11. JACK UP TRANSMISSION SLIGHTLY

Using a transmission jack, support the transmission.

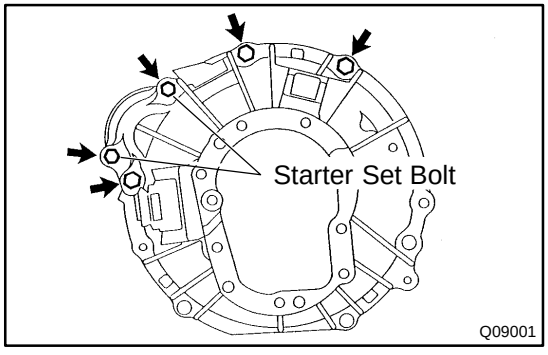

Q09001

12. REMOVE STARTER

(a) Remove the set bolt of the starter on the lower side with the clutch line bracket.

Torque: 39 N·m (400 kgf·cm, 29 ft·lbf)

(b) Disconnect the connector and wire, and remove the set bolt of the starter on the upper side and starter.

Torque: 39 N·m (400 kgf·cm, 29 ft·lbf)

13. REMOVE TRANSMISSION WITH TRANSFER

(a) Remove the 3 transmission mounting bolts from the engine.
Torque: 72 N·m (730 kgf·cm, 53 ft·lbf)

(b) Pull out the transmission with the transfer down and toward the rear.

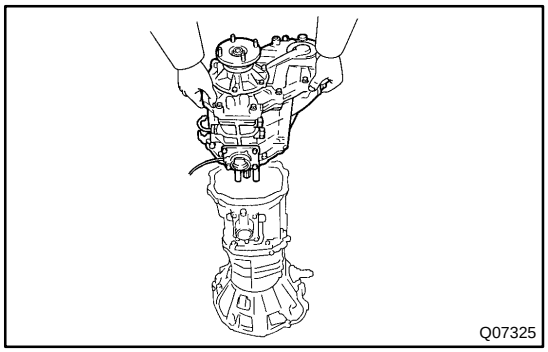
Q07325

14. REMOVE TRANSFER FROM TRANSMISSION

(a) Remove the 8 rear mounting bolts of the transfer adaptor.
Torque: 24 N·m (240 kgf·cm, 17 ft·lbf)

(b) Pull the transfer straight up and remove it from the transmission.

HINT:
Take care not to damage the adaptor rear oil seal with the transfer input gear spline.
HINT:
At the time of installation, please refer to the following item.
Apply MP grease to the lip of the adaptor rear oil seal.

OUTPUT SHAFT

COMPONENTS

MT02B–01

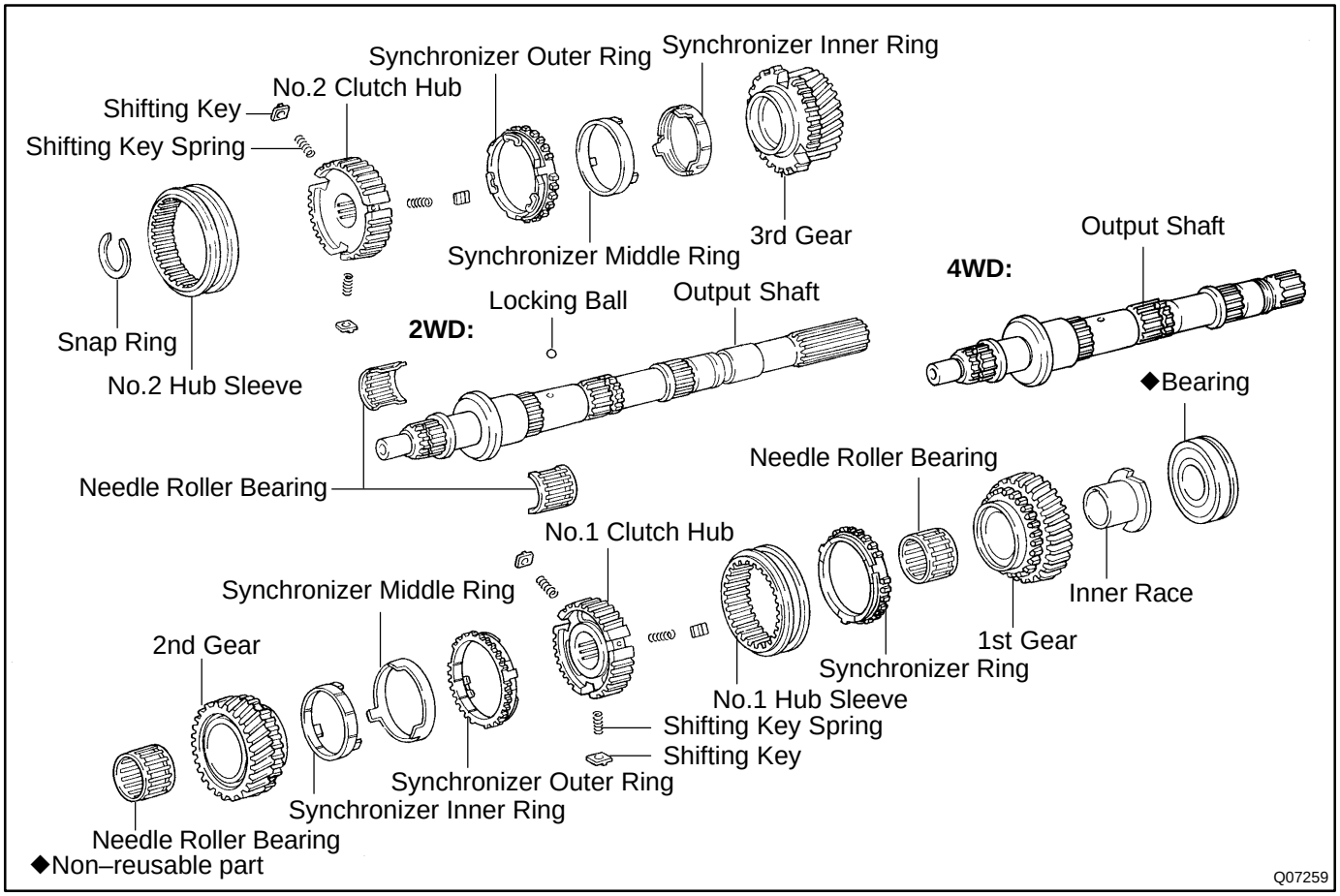

MT02C–01

DISASSEMBLY

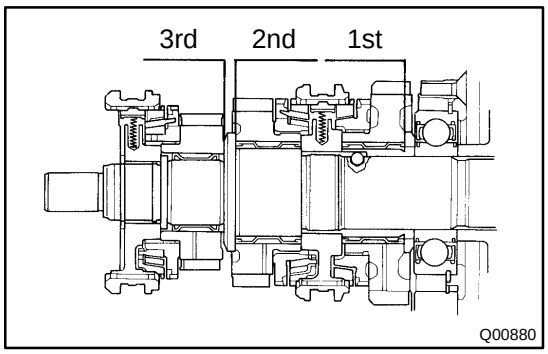

1. INSPECT EACH GEAR THRUST CLEARANCE

Using a feeler gauge, measure the thrust clearance of each gear.

Standard clearance:
0.10–0.25 mm (0.0039–0.0098 in.)
Maximum clearance:
0.30 mm (0.0118 in.)

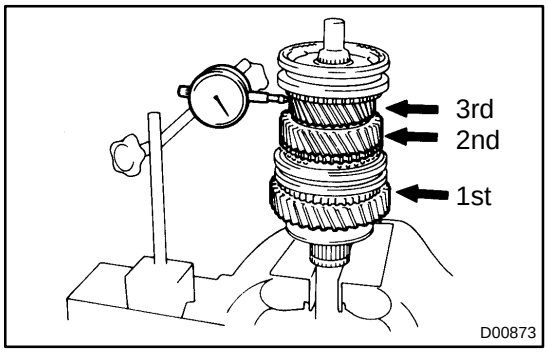

2. INSPECT EACH GEAR RADIAL CLEARANCE

Using a dial indicator, measure the radial clearance of each gear.

Standard clearance:
1st and 2nd gears:
0.009–0.060 mm (0.0004–0.0024 in.)
3rd gear: 0.015–0.066 mm (0.0006–0.0026 in.)
Maximum clearance:
1st and 2nd gears: 0.150 mm (0.0059 in.)
3rd gear: 0.200 mm (0.0079 in.)

If the clearance exceeds the maximum, replace the gear, shaft or needle roller bearing.

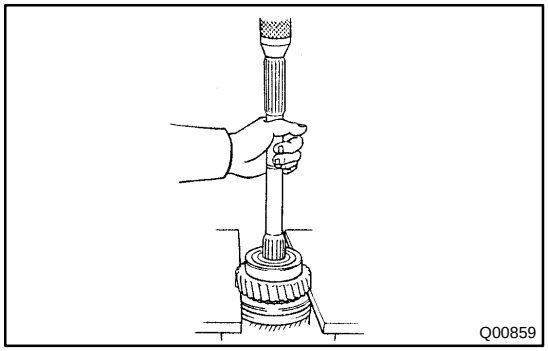

3. REMOVE OUTPUT SHAFT CENTER BEARING AND 1ST GEAR ASSEMBLY

(a) Shift the No.1 hub sleeve onto the 2nd gear.
(b) Using a press, remove the center bearing, 1st gear, needle roller bearing, inner race and synchronizer ring.

4. REMOVE LOCKING BALL ON OUTPUT SHAFT

Using a magnetic finger, remove the locking ball.

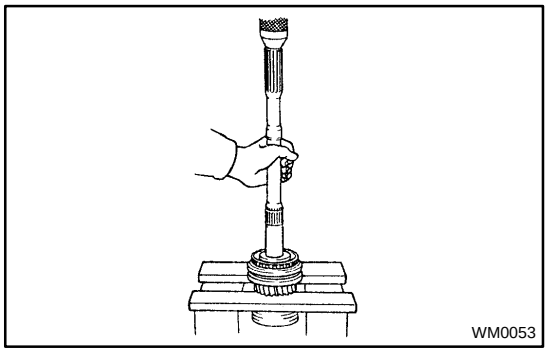

5. REMOVE NO.1 HUB SLEEVE ASSEMBLY, 2ND GEAR AND NEEDLE ROLLER BEARING

Using a press, remove the parts from the shaft as an assembly.

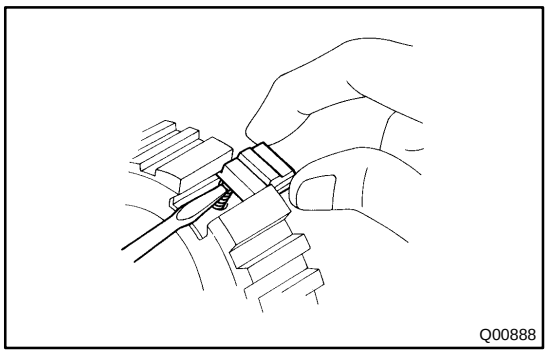

6. REMOVE NO.1 HUB SLEEVE, SHIFTING KEY AND SPRING FROM NO. 1 CLUTCH HUB

(a) Remove the No.1 hub sleeve from the No.1 clutch hub.
(b) Push the shifting key spring with a screwdriver, remove the 3 shifting keys and key springs.

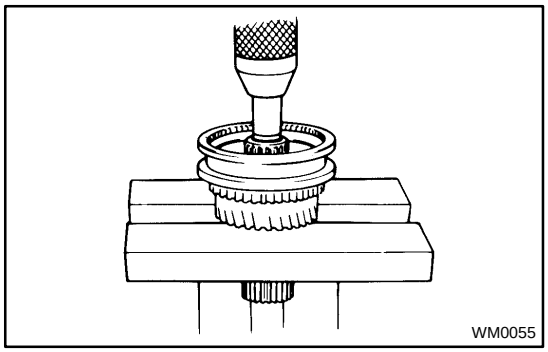

7. REMOVE NO.2 HUB SLEEVE ASSEMBLY AND 3RD GEAR

(a) Using a snap ring expander, remove the snap ring.
(b) Using a press, remove the No.2 hub sleeve, synchronizer ring and 3rd gear.

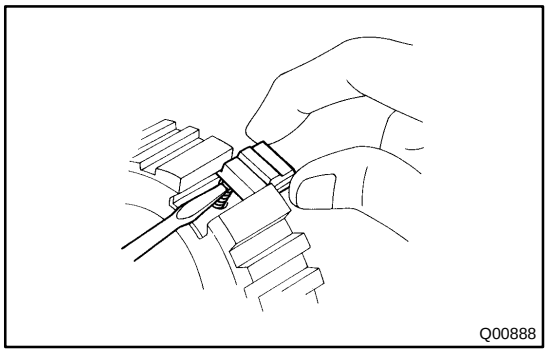

8. REMOVE NO.2 HUB SLEEVE, SHIFTING KEY AND SPRING FROM NO.2 CLUTCH HUB

(a) Remove the No.2 hub sleeve from the No.2 clutch hub.
(b) Push the shifting key spring with a screwdriver, remove the 3 shifting keys and key springs.

MT02D–01

INSPECTION

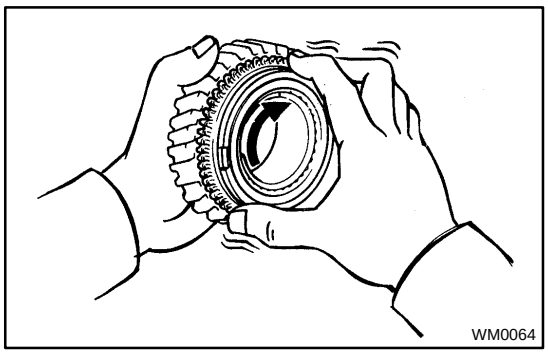
WM0064

1. INSPECT 1ST GEAR SYNCHRONIZER RING

(a) Check for wear or damage.

(b) Check for the braking effect of the synchronizer ring.
Turn the synchronizer ring in one direction while pushing it to the gear cone. Check that the ring locks.

If the braking effect is insufficient, apply a small amount of fine lapping compound between the synchronizer ring and gear cone. Lightly rub the synchronizer ring and gear cone together.

NOTICE:

Ensure the fine lapping compound is completely washed off after rubbing.

(c) Check again the braking effect of the synchronizer ring.

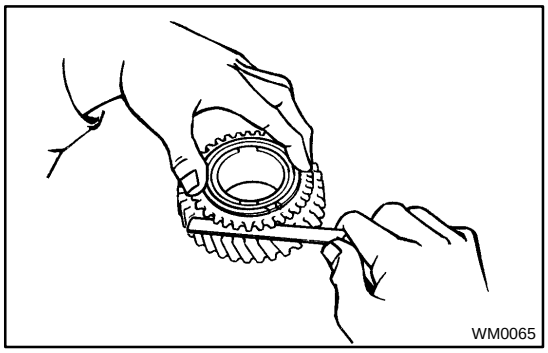
WM0065

(d) Using a feeler gauge, measure the clearance between the synchronizer ring back and gear spline end.
Minimum clearance: 0.5 mm (0.020 in.)

If the clearance is less than the minimum, replace the synchronizer ring, and apply a small amount of the fine lapping compound on gear cone.

NOTICE:

Ensure the fine lapping compound is completely washed off after rubbing.

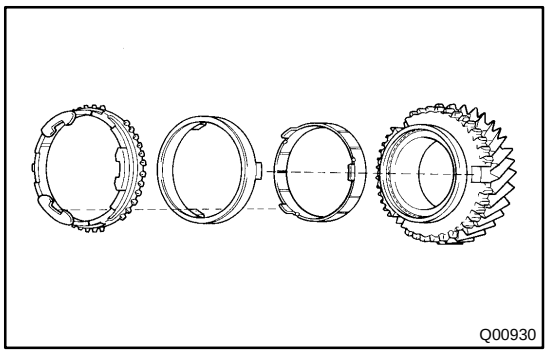
Q00930

2. INSPECT 2ND AND 3RD GEAR SYNCHRONIZER RINGS

(a) Check for wear or damage.

(b) Install the synchronizer inner ring, middle ring and outer ring to each gear.

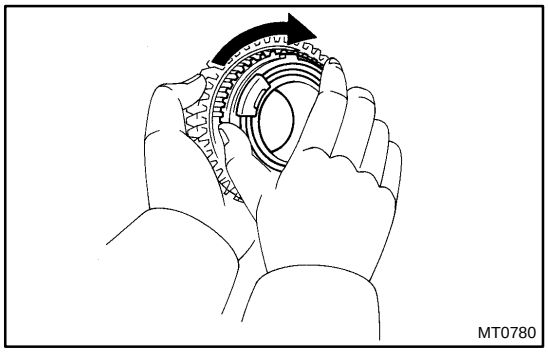
MT0780

(c) Check the braking effect of the synchronizer ring. Turn the synchronizer ring in one direction while pushing it to the gear cone. Check that the ring locks.

If it does not lock, replace the synchronizer ring.

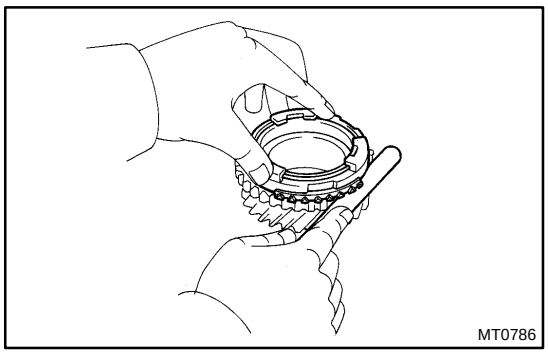
MT0786

(d) Using a feeler gauge, measure the clearance between the synchronizer ring back and the gear spline end.
Minimum clearance: 0.7 mm (0.028 in.)

If the clearance is less than the minimum, replace the synchronizer ring.

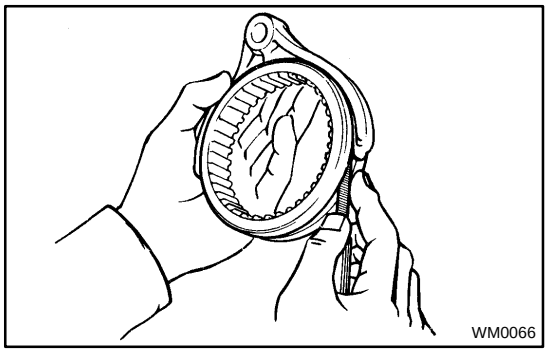
WM0066

3. INSPECT SHIFT FORK AND HUB SLEEVE CLEARANCE

Using a feeler gauge, measure the clearance between the hub sleeves and shift forks.
Maximum clearance: 1.0 mm (0.039 in.)

If the clearance exceeds the maximum, replace the shift fork or hub sleeve.

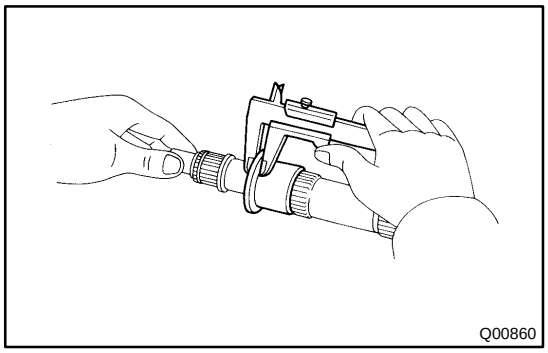
Q00860

4. INSPECT OUTPUT SHAFT AND INNER RACE

(a) Using vernier calipers, measure the output shaft flange thickness.
Minimum thickness: 5.60 mm (0.2205 in.)

If the thickness is less than the minimum, replace the output shaft.

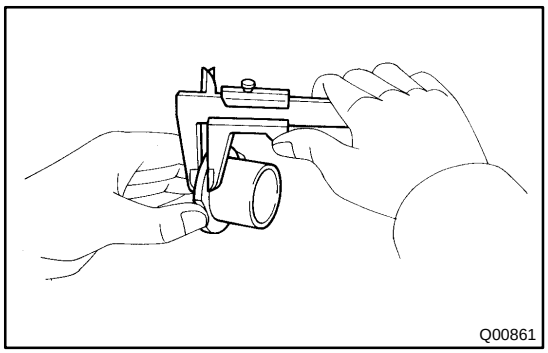
Q00861

(b) Using vernier calipers, measure the inner race flange thickness.
Minimum thickness: 4.78 mm (0.1881 in.)

If the thickness is less than the minimum, replace the inner race.

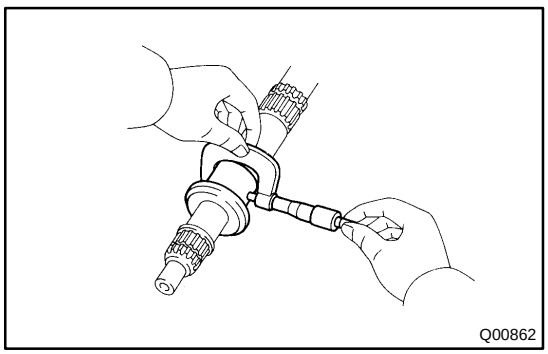
Q00862

(c) Using a micrometer, measure the outer diameter of the output shaft journal.
Minimum diameter:
2nd gear: 42.975 mm (1.6919 in.)
3rd gear: 31.969 mm (1.2586 in.)

If the outer diameter is less than the minimum, replace the output shaft.

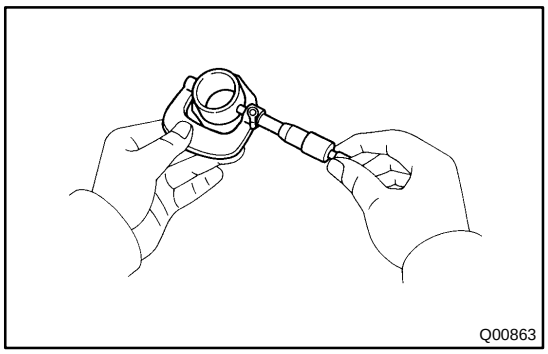

(d) Using a micrometer, measure the outer diameter of the inner race.
Minimum diameter: 42.975 mm (1.6919 in.)

If the outer diameter is less than the minimum, replace the inner race.

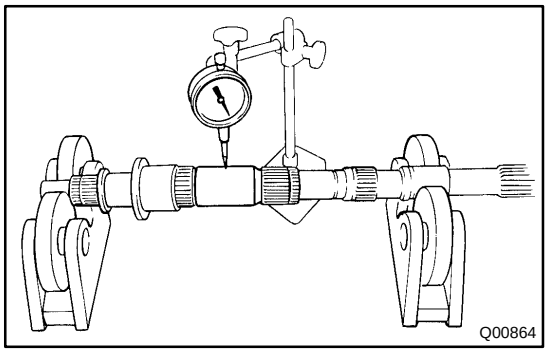

(e) Using a dial indicator, check for the shaft runout.
Maximum runout: 0.06 mm (0.0024 in.)

If the runout exceeds the maximum, replace the output shaft.

MT02E–01

REASSEMBLY

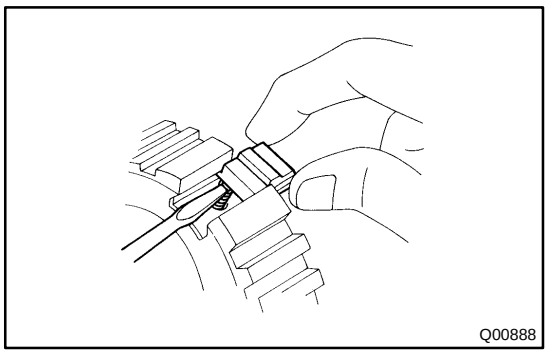

HINT:

Coat all of the sliding and rotating surfaces with gear oil before reassembly.

1. INSTALL NO.1 AND NO.2 CLUTCH HUBS INTO HUB SLEEVE

(a) Install the 3 shifting key springs to the clutch hub.

(b) While pushing the shifting key spring with a screwdriver, install the 3 shifting keys.

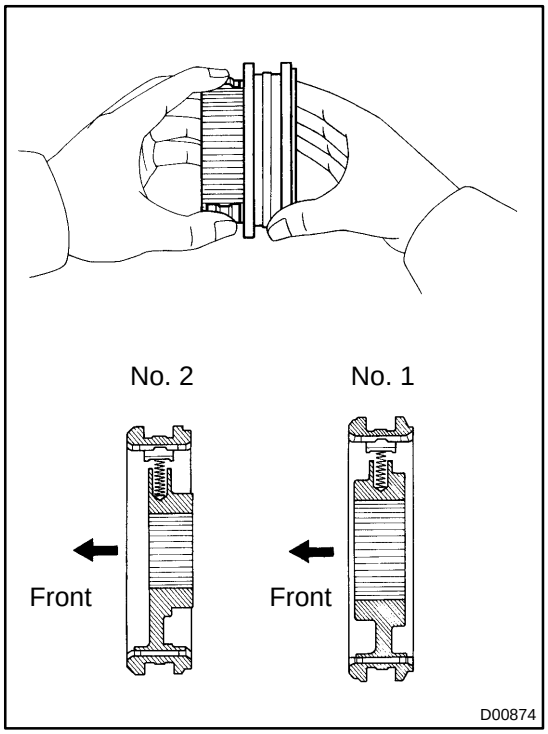

(c) While pushing the 3 shifting keys, install the clutch hub to the hub sleeve, as shown.

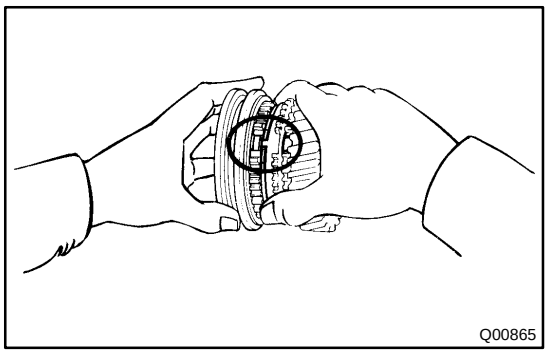

2. INSTALL 3RD GEAR AND NO.2 CLUTCH HUB ON OUTPUT SHAFT

(a) Apply gear oil to the shaft.

(b) Place the synchronizer ring on the gear and align the ring slots with the shifting keys.

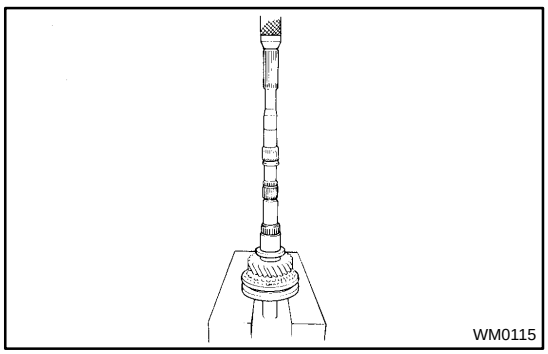

(c) Using a press, install the 3rd gear and No.2 clutch hub.

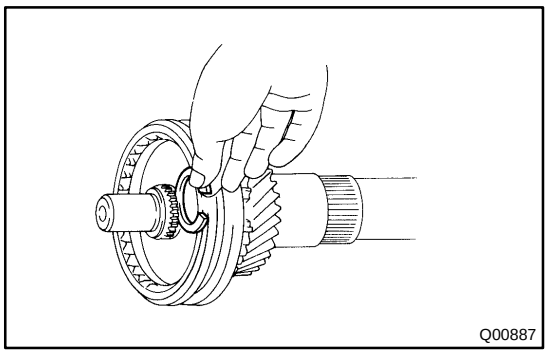
Q00887

3. INSTALL SNAP RING

(a) Select a snap ring that allows the minimum axial play.

Mark	Thickness mm (in.)
C – 1	1.75 – 1.80 (0.0689 –0.0709)
D	1.80 – 1.85 (0.0709 – 0.0728)
11	1.86 –1.91 (0.0732 – 0.0752)
12	1.92 – 1.97 (0.0756 – 0.0776)
13	1.98 – 2.03 (0.0780 – 0.0799)
14	2.04 – 2.09 (0.0803 – 0.0823)
15	2.10 – 2.15 (0.0827 – 0.0846)

(b) Using a snap ring expander, install the snap ring.

4. INSPECT 3RD GEAR THRUST CLEARANCE
(See page MT–28)

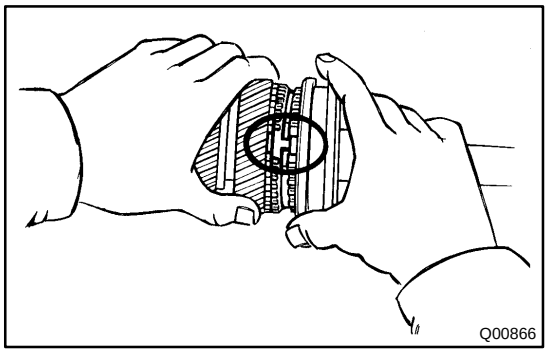
Q00866

5. INSTALL 2ND AND NO.1 CLUTCH HUB

(a) Apply gear oil to the shaft and needle roller bearing.

(b) Place the synchronizer ring on the gear and align the ring slots with the shifting keys.

(c) Install the needle roller bearing in the 2nd gear.

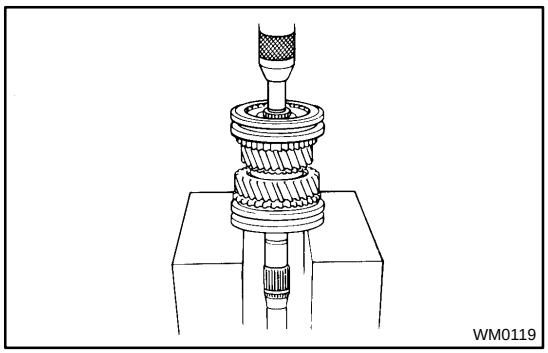
WM0119

(d) Using a press, install the 2nd gear and No.1 clutch hub.

6. INSPECT 2ND GEAR THRUST CLEARANCE
(See page MT–28)

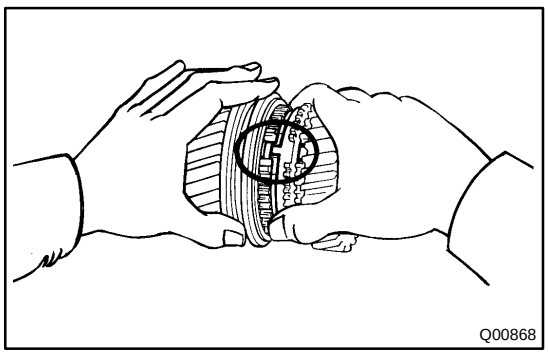
Q00868

7. INSTALL LOCKING BALL AND 1ST GEAR ASSEMBLY

(a) Install the locking ball in the shaft.

(b) Apply gear oil to the bearing.

(c) Assemble the 1st gear, synchronizer ring, needle roller bearing and bearing inner race.

(d) Install the assembly on the output shaft with the synchronizer ring slots aligned with the shifting keys and turn the inner race to align it with the locking ball.

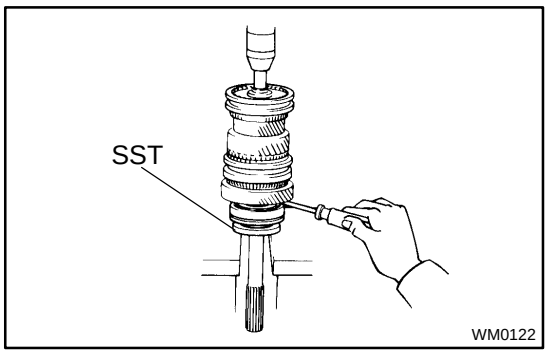

8. INSTALL OUTPUT SHAFT CENTER BEARING

Using SST and a press, install the bearing on the output shaft with the outer race snap ring groove toward the rear.

HINT:

Hold the 1st gear inner race to prevent it from falling.

SST 09506–35010

9. INSPECT 1ST GEAR THRUST CLEARANCE

(See page MT–28)

TROUBLESHOOTING

MT01Y–01

PROBLEM SYMPTOMS TABLE

Use the table below to help you find the cause of the problem. The numbers indicate the priority of the likely cause of the problem. Check each part in order. If necessary, replace these parts.

Symptom	Suspect Area	See page
Noise	5. Oil (Level low)	MT–4 MT–9
	6. Oil (Wrong)	MT–4 MT–9
	7. Gear (Worn or damaged	MT–13
	8. Bearing (Worn or damaged)	MT–13
Oil leakage	1. Oil (Level too high)	MT–9 MT–13
	2. Gasket (Damaged)	MT–13
	3. Oil seal (Worn or damaged)	MT–13
	4. O–Ring (Worn or damaged)	MT–13
Hard to shift or will not shift	1. Synchronizer ring (Worn or damaged)	MT–25 MT–28 MT–37
	2. Shift key spring (Damaged)	MT–28 MT–37
Jumps out of gear	1. Locking ball spring (Damaged)	MT–13
	2. Shift fork (Worn)	MT–13
	3. Gear (Worn or damaged)	MT–13
	4. Bearing (Worn or damaged)	MT–13

PP095–07

EQUIPMENT

Ammeter	
Dial indicator	Magnetic clutch
Hexagon wrench	Expansion valve
Ohmmeter	
Plastic hammer	Magnetic clutch
Test lead	
Thermometer	Thermistor
Torque wrench	
Voltmeter	

PP096–01

LUBRICANT

Item	Capacity	Classification
Compressor oil	–	ND–OIL 8 or equivalent
When replacing receiver	20 cc (0.71 fl.oz.)	
When replacing condenser	40 cc (1.4 fl. oz.)	
When replacing evaporator	40 cc (1.4 fl. oz.)	

PP3H9–01

RECOMMENDED TOOLS

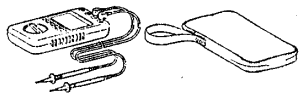	09082–00040	TOYOTA Electrical Tester.	
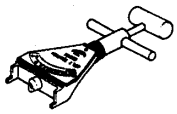	09216–00021	Belt Tension Gauge .	
	09216–00030	Belt Tension Gauge Cable .	
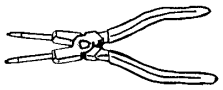	09905–00013	Snap Ring Pliers .	

AIR CONDITIONING

PP3H8–01

SST (Special Service Tools)

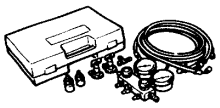	07110–58060	Air Conditioner Service Tool Set	
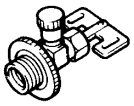	(07117–58060)	Refrigerant Drain Service Valve	
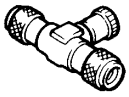	(07117–58070)	T–Joint	
	(07117–58080)	Quick Disconnect Adapter	
	(07117–58090)	Quick Disconnect Adapter	
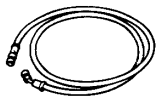	(07117–88060)	Refrigerant Charging Hose	
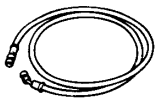	(07117–88070)	Refrigerant Charging Hose	
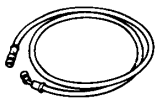	(07117–88080)	Refrigerant Charging Hose	
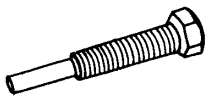	07112–66040	Magnetic Clutch Remover	
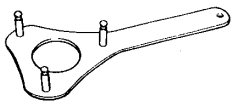	07112–76060	Magnetic Clutch Stopper	
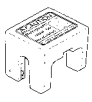	09870–00025	A/C Quick Joint Puller No.2	Liquid tube
	95416–00140	Gas Leak Detector <Halogen Leak Detector> (DENSO Part No.)	

PP0A9–01

EQUIPMENT

OBDII scan tool	
Ohmmeter	
Voltmeter	
Torque wrench	
Dial indicator with magnetic base	Drive plate
Vernier calipers	Torque converter clutch
Straight edge	Torque converter clutch

PP0AA–01

LUBRICANT

Item	Capacity	Classification
Automatic transmission fluid Dry fill Drain and refill	 6.5 liters (6.9 US qts, 5.7 lmp.qts) 2.4 liters (2.5 US qts, 2.1 lmp.qts)	 ATF D–II or DEXRON®III (DEXRON®II)

PP0A8–01

RECOMMENDED TOOLS

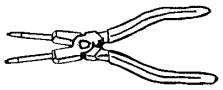	09905–00013 Snap Ring Pliers .	

AUTOMATIC TRANSMISSION (A44D)

PP0A7–03

SST (Special Service Tools)

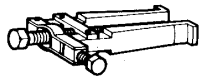	09308–10010	Oil Seal Puller	
	09325–20010	Transmission Oil Plug	
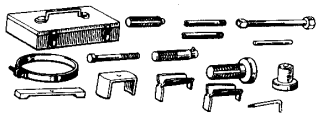	09350–20015	TOYOTA Automatic Transmission Tool Set	
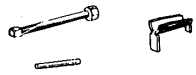	(09397–22020)	One–way Clutch Test Tool Set	
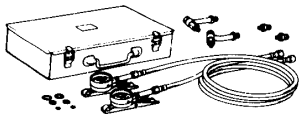	09992–00095	Automatic Transmission Oil Pressure Gauge Set	
	(09992–00112)	Adaptor A	
	(09992–00271)	Gauge Assy	

PP09F–01

EQUIPMENT

Dial indicator with magnetic base	Check drive plate runout
OBD II scan tool	
Straignt edge	Check torque converter clutch installation
Torque wrench	
Vernier calipers	Check torque converter clutch installation

PP09G–01

LUBRICANT

Item	Capacity	Classification
Automatic transmission fluid		
A340E:		
Dry fill	7.2 liters (7.6 US qts, 6.3 Imp.qts)	
Drain and refill	1.6 liters (1.7 US qts, 1.4 Imp.qts)	ATF D–II or DEXRON®III (DEXRON®II)
A340F:		
Dry fill	10.1 liters (10.7 US qts, 8.9 Imp.qts)	
Drain and refill	2.0 liters (2.1 US qts, 1.8 Imp.qts)	

PP09E–02

RECOMMENDED TOOLS

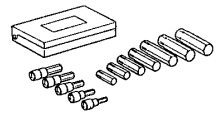	09040–00011	Hexagon Wrench Set .	
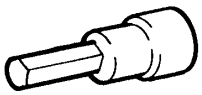	(09043–20120)	Socket Hexagon Wrench 12.	
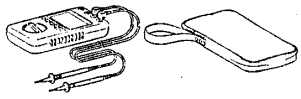	09082–00040	TOYOTA Electrical Tester.	
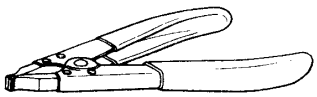	09905–00012	Snap Ring No.1 Expander .	
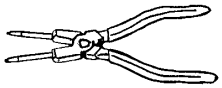	09905–00013	Snap Ring Pliers .	

AUTOMATIC TRANSMISSION (A340E, A340F)

PP1YE–01

SST (Special Service Tools)

	09032–00100	Oil Pan Seal Cutter	Valve body assembly
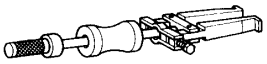	09308–00010	Oil Seal Puller	Extension housing oil seal
	09309–37010	Transmission Bearing Replacer	Extension housing oil seal
	09350–30020	TOYOTA Automatic Transmission Tool Set	
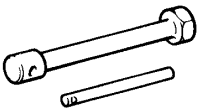	(09351–32010)	One–way Clutch Test Tool	Torque converter clutch and drive plate
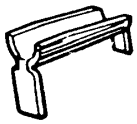	(09351–32020)	Stator Stopper	Torque converter clutch and drive plate
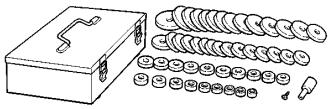	09950–60010	Replacer Set	
	(09951–00350)	Replacer 35	Extension housing oil seal
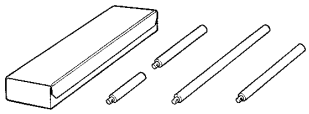	09950–70010	Handle Set	
	(09951–07100)	Handle 100	Extension housing oil seal

PP091–05

EQUIPMENT

Voltmeter	
Ammeter	
Ohmmeter	
Test lead	
Thermometer	Engine coolant temperature sender gauge
Syphon	Brake fluid level warning switch
Bulb (3.4 W)	Fuel sender gauge, Integration relay
Bulb (21 W)	Turn signal flasher relay
Dry cell battery	Fuel sender gauge, Power mirror
Torque wrench	

PP090–01

RECOMMENDED TOOLS

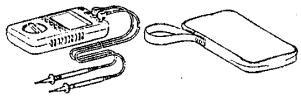	09082–00040 TOYOTA Electrical Tester.	

BODY ELECTRICAL

PP08Z–01

SST (Special Service Tools)

 09843–18020 Diagnosis Check Wire	

PP0MV–03

EQUIPMENT

Clip remover	
Torque wrench	
Torx driver	
Hog ring pliers	
Tape	To avoid surface damage
Adhesive tape	To avoid surface damage
Double – stick tape	
Adhesive	
Cleaner	
Shop rag	Regulator handle
Knife	Moulding
Heat light	Moulding
Piano wire	Windshield
Sealer gun	
Brush	
Putty spatula	
Wooden block or similar object	For tying both piano wire ends
Plastic sheet	To avoid surface damage
Rope (no projections, difficult to break)	Seat belt pretensioner disposal
Tire Width: 185 mm (7.28 in.) Inner diam: 360 mm (14.17 in.)	Seat belt pretensioner disposal
Tire with disc wheel Width: 185 mm (7.28 in.) Inner diam 360 mm (14.17 in.)	Seat belt pretinsioner disposal
Vinyl bag	Seat belt pretensioner disposal

PP0A0–01

LUBRICANT

Item	Capacity	Classification
MP grease	–	–

PP0TC–04

SSM (Special Service Materials)

08833–00070	Adhesive 1324, THREE BOND 1324 or equivalent	
08833–00030	Three cement black or equivalent	
08850–00801	Windshield Glass Adhesive Set or equivalent	

BODY

PP1YH–02

SST (Special Service Tools)

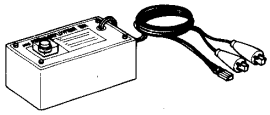	09082–00700	SRS Airbag Deployment Tool	
	09082–00770	Airbag Deployment Wire Sub–harness No.2	
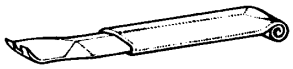	09806–30010	Windshield Moulding Remover	
	09812–00010	Door Hinge Set Bolt Wrench	

PP09P–03

EQUIPMENT

Torque wrench	
Micrometer	Brake disc
Dial indicator	Brake disc
Brake drum gauge	Brake drum
Vernier calipers	Brake drum

PP09Q–02

LUBRICANT

Item	Capacity	Classification
Brake fluid	–	SAE J1703 or FMVSS No. 116 DOT 3

PP09O–02

RECOMMENDED TOOLS

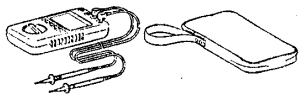	09082–00040 TOYOTA Electrical Tester.	
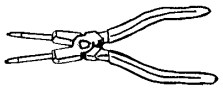	09905–00013 Snap Ring Pliers .	

BRAKE

PP09N–02

SST (Special Service Tools)

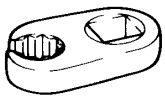	09023–00100	Union Nut Wrench 10 mm	
	09703–30010	Brake Shoe Return Spring Tool	
	09709–29018	LSPV Gauge Set	
	09718–00010	Shoe Hold Down Spring Driver	
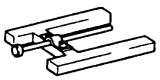	09737–00011	Brake Booster Push Rod Gauge	
	09843–18020	Diagnosis Check Wire	

PP07Z–01

EQUIPMENT

Battery specific gravity gauge	
Belt tension gauge	
Torque wrench	
Vernier calipers	Rotor (Slip ring), Brush

PP07Y–02

RECOMMENDED TOOLS

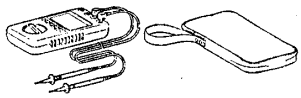	09082–00040 TOYOTA Electrical Tester.	

CHARGING (2RZ–FE, 3RZ–FE)

PP07X–02

SST (Special Service Tools)

	09285–76010	Injection Pump Camshaft Bearing Cone Replacer	Rotor rear bearing cover
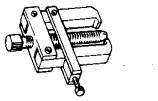	09286–46011	Injection Pump Spline Shaft Puller	Rectifier end frame
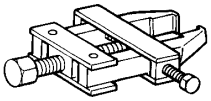	09820–00021	Alternator Rear Bearing Puller	
	09820–00031	Alternator Rear Bearing Replacer	Rotor rear bearing
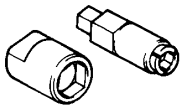	09820–63011	Alternator Pulley Set Nut Wrench Set	
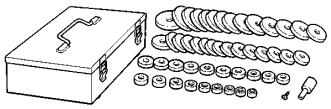	09950–60010	Replacer Set	Rotor front bearing
	(09951–00260)	Replacer 26	
	(09951–00500)	Replacer 50	
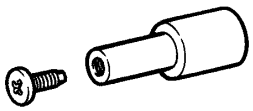	(09952–06010)	Adapter	

PP02C–01

EQUIPMENT

Battery specific gravity gauge	Battery
Belt tension gauge	
Torque wrench	
Vernier calipers	Rotor (Slip ring)

PP02B–02

RECOMMENDED TOOLS

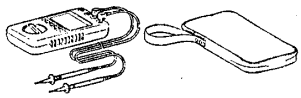	09082–00040 TOYOTA Electrical Tester.	

CHARGING (5VZ–FE)

PP02A–03

SST (Special Service Tools)

	09285–76010	Injection Pump Camshaft Bearing Cone Replacer	Rotor rear bearing cover
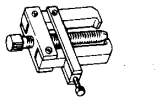	09286–46011	Injection Pump Spline Shaft Puller	Rectifier end frame
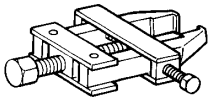	09820–00021	Alternator Rear Bearing Puller	
	09820–00031	Alternator Rear Bearing Replacer	
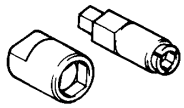	09820–63011	Alternator Pulley Set Nut Wrench Set	
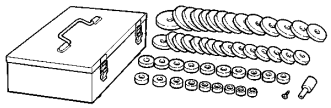	09950–60010	Replacer Set	Rotor front bearing
	(09951–00500)	Replacer 50	

PP09Y–01

EQUIPMENT

Calipers	
Dial indicator with magnetic base	
Torque wrench	

PP09X–01

RECOMMENDED TOOLS

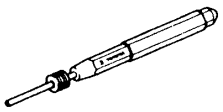	09031–00030	Pin Punch .	Reservoir tank
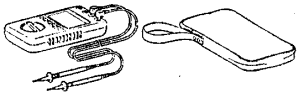	09082–00040	TOYOTA Electrical Tester.	
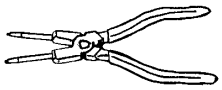	09905–00013	Snap Ring Pliers .	

CLUTCH

SST (Special Service Tools)

PP09W–01

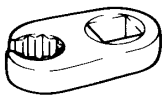	09023–00100	Union Nut Wrench 10 mm	Clutch line
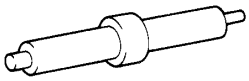	09301–00110	Clutch Guide Tool	
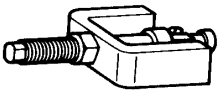	09303–35011	Input Shaft Front Bearing Puller	
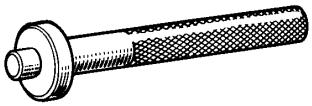	09304–30012	Input Shaft Front Bearing Replacer	
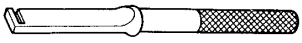	09333–00013	Clutch Diaphragm Spring Aligner	

PP07M–01

COOLANT

Item	Capacity	Classification
2WD		Ethylene–glycol base
M/T	8.0 liters (8.5 US qts, 7.0 lmp. qts)	
A/T	7.8 liters (8.2 US qts, 6.9 lmp. qts)	
4WD		
M/T	8.3 liters (8.8 US qts, 7.3 lmp. qts)	
A/T	8.2 liters (8.7 US qts, 7.2 lmp. qts)	

COOLING (2RZ–FE, 3RZ–FE)

PP07L–01

EQUIPMENT

Heater	Thermostat
Radiator cap tester	
Thermometer	Thermostat
Torque wrench	

PP01K–01

COOLANT

Item		Capacity	Classification
Engine coolant	w/ Rear heater	9.0 liters (9.5 US qts, 7.9 lmp. qts)	Ethylene–glycol base
	w/o Rear heater	8.0 liters (8.5 US qts, 7.0 lmp. qts)	

PP01J–01

EQUIPMENT

Heater	
Radiator cap tester	
Thermometer	
Torque wrench	

COOLING (5VZ–FE)

PP01I–02

SST (Special Service Tools)

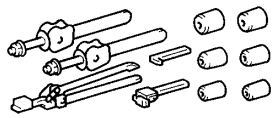	09230–01010 Radiator Service Tool Set	

EMISSION CONTROL (2RZ–FE, 3RZ–FE)

PP07H–02

EQUIPMENT

Hose clipper	
MITYVAC (Hand–held vacuum pump)	
OBDII scan tool	Engine speed
Pressure gauge	
Torque wrench	
Vacuum gauge	

PP015–04

EQUIPMENT

Hose Clipper	
OBDII scan tool	Engine speed
Torque wrench	
Vacuum Gauge	

EMISSION CONTROL (5VZ–FE)

PP014–05

RECOMMENDED TOOLS

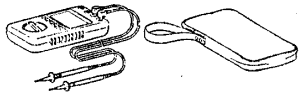	09082–00040 TOYOTA Electrical Tester.	

PP07F–01

EQUIPMENT

Caliper gauge	
CO/HC meter	
Compression gauge	
Connecting rod aligner	
Cylinder gauge	
Dial indicator	
Dye penetrant	
Engine tune–up tester	
Heater	
Magnetic finger	
Micrometer	
OBDII scan tool	Engine speed
Piston ring compressor	
Piston ring expander	
Plastigage	
Precision straight edge	
Soft brush	
Spring tester	Valve spring
Steel square	Valve spring
Thermometer	
Torque wrench	
V–block	
Valve seat cutter	
Vernier calipers	

PP07E–02

RECOMMENDED TOOLS

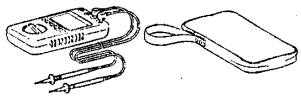	09082–00040	TOYOTA Electrical Tester.	
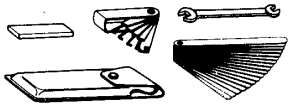	09200–00010	Engine Adjust Kit .	
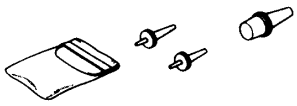	09258–00030	Hose Plug Set .	Plug for vacuum hose, fuel hose, etc.

ENGINE MECHANICAL (2RZ–FE, 3RZ–FE)

PP07D–05

SST (Special Service Tools)

	09032–00100	Oil Pan Seal Cutter	
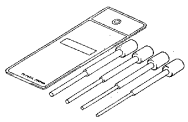	09201–10000	Valve Guide Bushing Remover & Replacer Set	
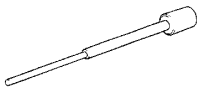	(09201–01060)	Valve Guide Bushing Remover & Replacer 6	
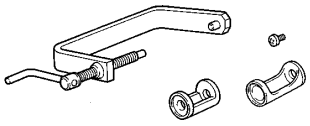	09202–70020	Valve Spring Compressor	
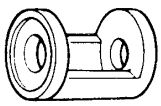	(09202–00010)	Attachment	
	09207–76010	Rocker Arm Bushing	
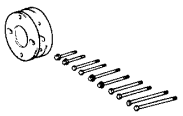	09213–54015	Crankshaft Pulley Holding Tool	
	09223–15030	Oil Seal & Bearing Replacer	Crankshaft rear oil seal
	09236–00101	Water Pump Overhaul Tool Set	
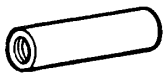	(09236–15010)	Bearing Stay	Valve stem oil seal
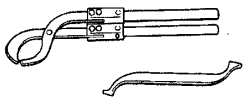	09248–55040	Valve Clearance Adjust Tool Set	
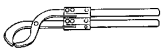	(09248–05410)	Valve Lifter Press	

	(09248–05420)	Valve Lifter Stopper	
	09330–00021	Companion Flange Holding Tool	Crankshaft pulley
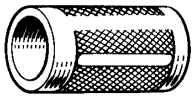	09636–20010	Upper Ball Joint Dust Cover Replacer	Crankshaft timing gear
	09816–30010	Oil Pressure Switch Socket	Knock sensor
	09843–18040	Diagnosis Check Wire	
	09950–40011	Puller B Set	Crankshaft timing gear
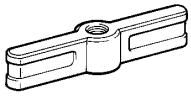	(09951–04010)	Hanger 150	
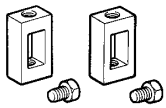	(09952–04010)	Slide Arm	
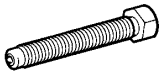	(09953–04010)	Center Bolt 100	
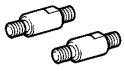	(09954–04010)	Arm 25	
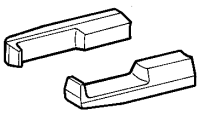	(09955–04061)	Claw No.6	
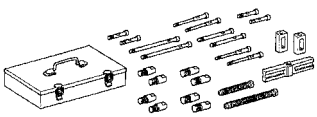	09950–50013	Puller C Set	
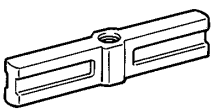	(09951–05010)	Hanger 150	

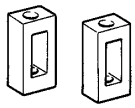	(09952–05010)	Slide Arm	
	(09953–05010)	Center Bolt 100	
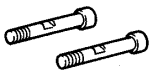	(09954–05021)	Claw No.2	
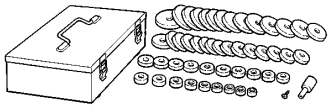	09950–60010	Replacer Set	Spark plug tube gasket
	(09951–00260)	Replacer 26	
	(09951–00490)	Replacer 49	
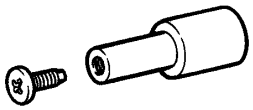	(09952–06010)	Adapter	
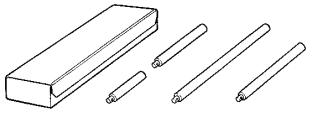	09950–70010	Handle Set	
	(09951–07150)	Handle 150	Valve guide bushing Spark plug tube gasket Crankshaft rear oil seal
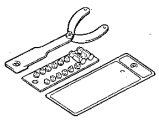	09960–10010	Variable Pin Wrench Set	
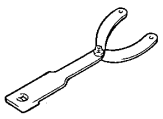	(09962–01000)	Variable Pin Wrench Arm Assy	
	(09963–00500)	Pin 5	Exhaust camshaft sub–gear
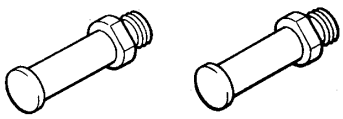	(09963–01000)	Pin 10	PS pump pulley

PP018–01

EQUIPMENT

Caliper gauge	
CO/HC meter	
Compression gauge	
Connecting rod aligner	
Cylinder gauge	
Dial indicator	
Dye penetrant	
Heater	
Magnetic finger	
Micrometer	
OBDII scan tool	Engine speed
Piston ring compressor	
Piston ring expander	
Plastigage	
Precision straight edge	
Soft brush	
Spring tester	Valve spring
Steel square	Valve spring
Thermometer	
Timing light	Ignition timing
Torque wrench	
Valve seat cutter	
V–block	
Vernier calipers	

PP017–08

RECOMMENDED TOOLS

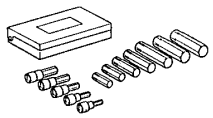	09040–00011	Hexagon Wrench Set .	
	09090–04020	Engine Sling Device	For suspending engine
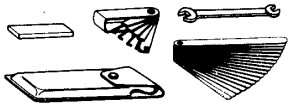	09200–00010	Engine Adjust Kit .	
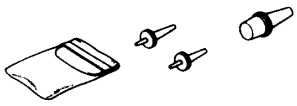	09258–00030	Hose Plug Set .	Plug for the vacuum hose, fuel hose etc.
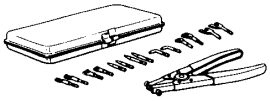	09904–00010	Expander Set .	

ENGINE MECHANICAL (5VZ–FE)

PP016–11

SST (Special Service Tools)

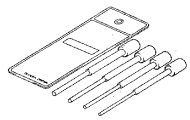	09201–10000	Valve Guide Bushing Remover & Replacer Set	
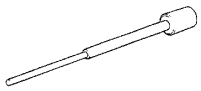	(09201–01060)	Valve Guide Bushing Remover & Replacer 6	
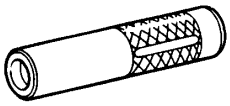	09201–41020	Valve Stem Oil Seal Replacer	
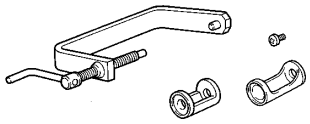	09202–70020	Valve Spring Compressor	
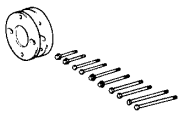	09213–54015	Crankshaft Pulley Holding Tool	
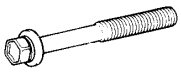	(90119–08216)	Bolt	
	09222–30010	Connecting Rod Bushing Remover & Replacer	
	09223–15030	Oil Seal & Bearing Replacer	Crankshaft rear oil seal
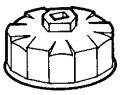	09228–07501	Oil Filter Wrench	
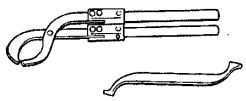	09248–55040	Valve Clearance Adjust Tool Set	
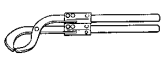	(09248–05410)	Valve Lifter Press	
	(09248–05420)	Valve Lifter Stopper	

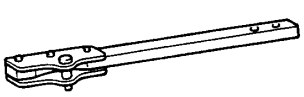	09330–00021	Companion Flange Holding Tool	Crankshaft pulley
	09816–30010	Oil Pressure Switch Socket	Oil pressure switch
	09843–18040	Diagnosis Check Wire	
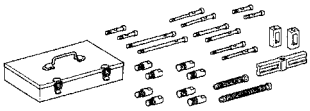	09950–50013	Puller C Set	
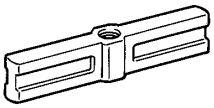	(09951–05010)	Hanger 150	Crankshaft pulley Crankshaft timing pulley
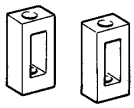	(09952–05010)	Slide Arm	Crankshaft pulley Crankshaft timing pulley
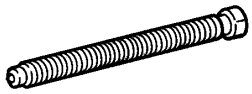	(09953–05020)	Center Bolt 150	Crankshaft pulley Crankshaft timing pulley
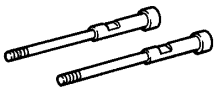	(09954–05011)	Claw No.1	Crankshaft timing pulley
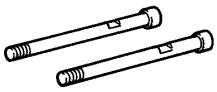	(09954–05031)	Claw No.3	Crankshaft pulley
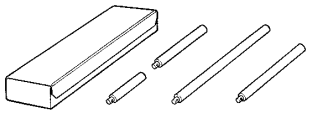	09950–70010	Handle Set	
	(09951–07150)	Handle 150	Crankshaft rear oil seal Valve guide bushing
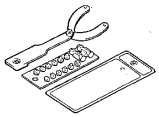	09960–10010	Variable Pin Wrench Set	
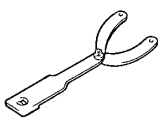	(09962–01000)	Variable Pin Wrench Arm Assy	Camshaft timing pulley Camshaft sub–gear

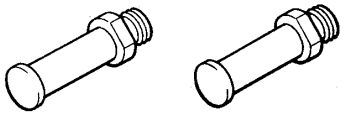	(09963–01000) Pin 10	Camshaft timing pulley
	(09963–00600) Pin 6	Camshaft sub–gear

PP07T–01

EQUIPMENT

Megger insulation resistance meter	Spark plug
Spark plug cleaner	

IGNITION (2RZ–FE, 3RZ–FE)

PP07S–02

RECOMMENDED TOOLS

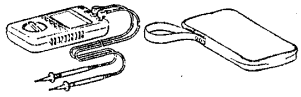	09082–00040	TOYOTA Electrical Tester.	
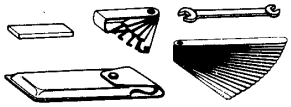	09200–00010	Engine Adjust Kit .	

PP020–01

EQUIPMENT

Megger insulation resistance meter	Spark plug
Spark plug cleaner	

IGNITION (5VZ–FE)

PP01Z–04

RECOMMENDED TOOLS

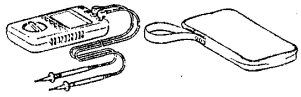	09082–00040	TOYOTA Electrical Tester.	
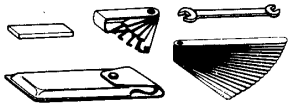	09200–00010	Engine Adjust Kit .	

PP07P–01

EQUIPMENT

Oil pressure gauge	
Precision straight edge	Oil pump
Torque wrench	

PP07Q–02

LUBRICANT

Item	Capacity	Classification
Engine oil		API grade SJ, Energy–Conserving or ILSAC multigrade engine oil. SAE 5W–30 is the best choice for your vehicle, for good fuel economy, and good starting in cold weather.
2WD		
Dry fill	6.2 liters (6.6 US qts, 5.5 lmp. qts)	
Drain and refill		
w/ Oil filter change	5.5 liters (5.8 US qts, 4.8 lmp. qts)	
w/o Oil filter change	4.8 liters (5.0 US qts, 4.2 lmp. qts)	
4WD		
Dry fill	5.8 liters (6.1 US qts, 5.1 lmp. qts)	
Drain and refill		
w/ Oil filter change	5.4 liters (5.7 US qts, 4.8 lmp. qts)	
w/o Oil filter change	4.7 liters (5.0 US qts, 4.1 lmp. qts)	

PP07O–02

RECOMMENDED TOOLS

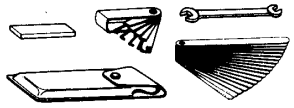	09200–00010 Engine Adjust Kit .	

LUBRICATION (2RZ–FE, 3RZ–FE)

PP07N–02

SST (Special Service Tools)

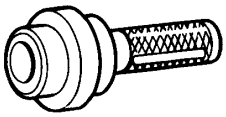	09223–50010	Crankshaft Front oil Seal Replacer	
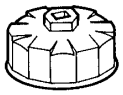	09228–07501	Oil Filter Wrench	
	09816–30010	Oil Pressure Switch Socket	

PP01T–01

EQUIPMENT

Oil pressure gauge	
Precision straight edge	Oil pump
Torque wrench	

PP01U–01

LUBRICANT

Item		Capacity	Classification
Engine oil			API grade SH, Energy–Conserving II multigrade
Dry fill		5.9 liters (6.2 US qts, 5.2 lmp. qts)	engine oil or ILSAC multigrade engine oil and
Drain and refill	w/ Oil filter change	5.2 liters (5.5 US qts, 4.6 lmp. qts)	recommended viscosity oil, with SAE 5W–30
	w/o Oil filter change	4.9 liters (5.2 US qts, 4.3 lmp. qts)	being preferred engine oil

PP01S–04

RECOMMENDED TOOLS

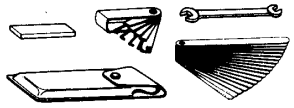	09200–00010 Engine Adjust Kit .	

LUBRICATION (5VZ–FE)

PP01R–03

SST (Special Service Tools)

	09032–00100	Oil Pan Seal Cutter	
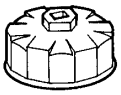	09228–07501	Oil Filter Wrench	
	09309–37010	Transmission Bearing Replacer	Camshaft front oil seal
	09816–30010	Oil Pressure Switch Socket	

MAINTENANCE

EQUIPMENT

PP00Y–01

Mirror	Brake hose
Torque wrench	

PP0A4–01

EQUIPMENT

Dial indicator	
Micrometer	
Torque wrench	
Feeler gauge	
Magnetic finger	

PP0A5–01

LUBRICANT

Item		Capacity	Classification
Manual transmission oil	2WD	2.6 liters (2.7 US qts, 2.3 Imp. qts)	API GL–4 or GL–5
	4WD	2.2 liters (2.3 US qts, 1.9 Imp. qts)	SAE 75W–90

PP0A3–02

RECOMMENDED TOOLS

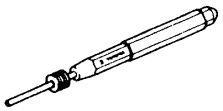	09031–00030	Pin Punch .	
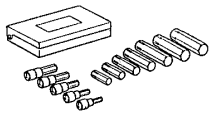	09040–00011	Hexagon Wrench Set .	
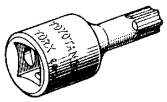	09042–00020	Torx Socket T40 .	
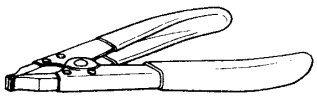	09905–00012	Snap Ring No.1 Expander .	

MANUAL TRANSMISSION (R150, R150F)

PP0A2–04

SST (Special Service Tools)

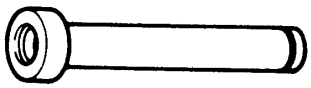	09309–35010	Transmission Rear Bearing Replacer	2WD: Output shaft rear bearing Output shaft center bearing
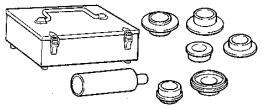	09316–60011	Transmission & Transfer Bearing Replacer	
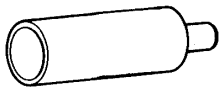	(09316–00011)	Replacer Pipe	Output shaft rear bearing Gear spline piece No.5
	(09316–00031)	Replacer ”B”	5th gear
	(09316–00071)	Replacer ”F”	4WD: Output shaft rear bearing Output shaft center bearing
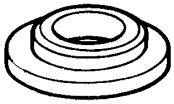	09506–35010	Differential Drive Pinion Rear Bearing Replacer	Input shaft bearing
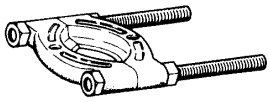	09950–00020	Bearing Remover	
	09950–40011	Puller B Set	Output shaft rear bearing
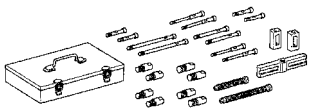	09950–50013	Puller C Set	Gear spline piece No. 5
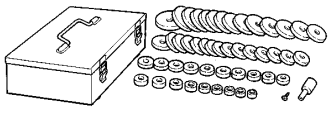	09950–60010	Replacer Set	
	(09951–00510)	Replacer 51	Front bearing retainer oil seal
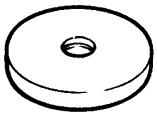	(09951–00570)	Replacer 57	Extension housing oil seal Transfer adaptor oil seal

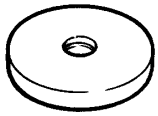	(09951–00620) Replacer 62	Counter rear bearing
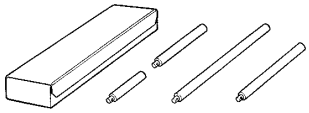	09950–70010 Handle Set	
	(09951–07150) Handle 150	

PP09T–01

EQUIPMENT

Calipers	
Dial indicator	
Feeler gauge	
Magnetic finger	
Micrometer	
Torque wrench	

PP09U–01

LUBRICANT

Item		Capacity	Classification
Manual transmission oil	2WD	2.6 liters (2.7 US qts, 2.3 Imp. qts)	API GL–4 or GL–5
	4WD	2.5 liters (2.6 US qts, 2.2 Imp. qts)	SAE 75W–90

PP09S–02

RECOMMENDED TOOLS

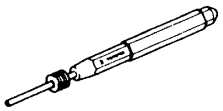	09031–00030	Pin Punch .	
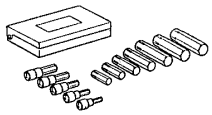	09040–00011	Hexagon Wrench Set .	
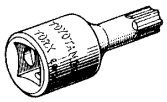	09042–00020	Torx Socket T40 .	
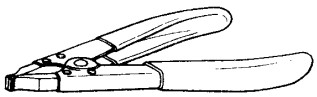	09905–00012	Snap Ring No.1 Expander .	

MANUAL TRANSMISSION (W59)

PP09R–02

SST (Special Service Tools)

	09308–00010	Oil Seal Puller	Output shaft rear bearing outer race
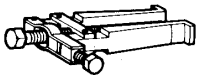	(09308–10010)	Oil Seal Puller	Extension housing oil seal
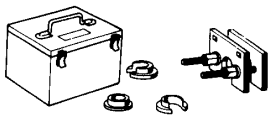	09312–20011	Transmission Gear Remover & Replacer	5th gear Output shaft rear bearing Reverse gear
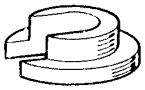	(09313–00010)	Reverse Gear Remover	
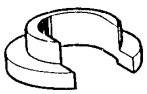	(09313–00030)	Rear Bearing Replacer	
	(09313–00040)	Plate ”A”	
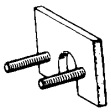	(09313–00050)	Plate ”B”	
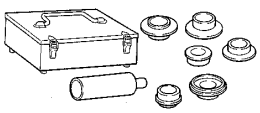	09316–60011	Transmission & Transfer Bearing Replacer	No.3 clutch hub Counter gear center bearing outer race
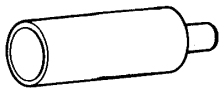	(09316–00011)	Replacer Pipe	
	(09316–00071)	Replacer ”F”	
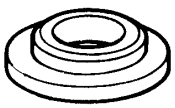	09506–35010	Differential Drive Pinion Rear Bearing Replacer	Input shaft bearing Output shaft center bearing
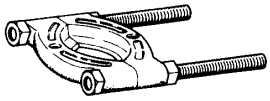	09950–00020	Bearing Remover	

	09950–40011	Puller B Set	Counter 5th gear No.3 clutch hub Reverse gear Counter gear side race
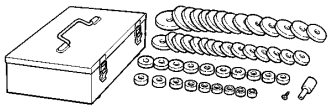	09950–60010	Replacer Set	
	(09951–00440)	Replacer 44	Front bearing retainer oil seal
	(09951–00510)	Replacer 51	Counter gear center bearing outer race
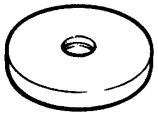	(09951–00560)	Replacer 56	Output shaft rear bearing outer race Extension housing oil seal Transfer adaptor oil seal
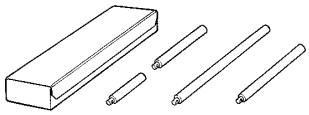	09950–70010	Handle Set	
	(09951–07150)	Handle 150	

PP0AI–01

EQUIPMENT

Dial indicator	
Torque wrench	

PROPELLER SHAFT

SST (Special Service Tools)

PP0AH–04

	09325–20010	Transmission Oil Plug	2–joint type: Transmission oil leakage prevention
	09325–40010	Transmission Oil Plug	3–joint type: Transmission oil leakage prevention
	09330–00021	Companion Flange Holding Tool	Flange
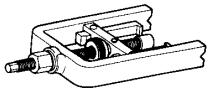	09332–25010	Universal Joint Bearing Remover & Replacer	Spider bearing
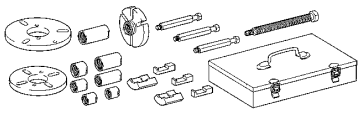	09950–30012	Puller A Set	
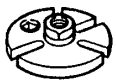	(09951–03010)	Upper Plate	
	(09953–03010)	Center Bolt	
	(09954–03010)	Arm	
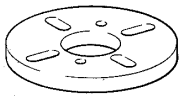	(09955–03030)	Lower Plate 130	
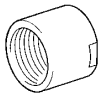	(09956–03020)	Adapter 18	

PP03F–02

EQUIPMENT

Bolt Length: 35 mm (1.38 in.) Pitch: 1.0 mm (0.039 in.) Diam: 6.0 mm (0.236 in.)	Airbag disposal
Tire Width: 185 mm (7.28 in.) Inner diam: 360 mm (14.17 in.)	Airbag disposal
Tire with disc wheel Width: 185 mm (7.28 in.) Inner diam: 360 mm (14.17 in.)	Airbag disposal
Torque wrench	
Vinyl bag	Airbag disposal

PP28H–01

RECOMMENDED TOOLS

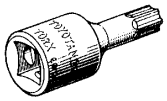	09042–00020	Torx Socket T40 .	Airbag sensor assembly
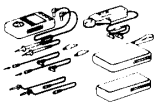	09082–00050	TOYOTA Electrical Tester Set.	
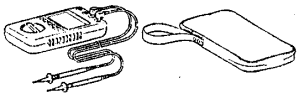	09082–00040	TOYOTA Electrical Tester.	
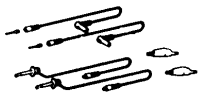	(09083–00150)	Test Lead Set	

SUPPLEMENTAL RESTRAINT SYSTEM

PP1YP–01

SST (Special Service Tools)

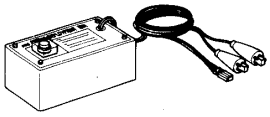	09082–00700	SRS Airbag Deployment Tool	
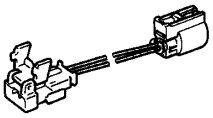	09082–00760	Airbag Deployment Wire Sub–harness No.4	
	09843–18020	Diagnosis Check Wire	

PP09A–01

EQUIPMENT

Dial indicator or dial indicator with magnetic base	
Torque wrench	
Spring tension gauge	
Micrometer	
Voltmeter	
Ohmmeter	

PP09B–05

LUBRICANT

Item	Capacity	Application
Front drive shaft Outboard joint grease (Color = Black) Inboard joint grease (Color = Yellow ocher)	215 – 235 g (7.58 – 8.29 oz.) 230 – 250 g (8.11 – 8.82 oz.)	
Front differential Differential oil	1.15 liters (1.22 US qts. 1.01 lmp. qts)	Hypoid gear oil API GL–5 SAE 75W–90
Rear differential Differential oil (2RZ–FE)	1.35 liters (1.43 US qts. 1.19 lmp. qts)	Hypoid gear oil API GL–5SAE 75W–90 Above –18˚C (0˚F) SAE 90 Below –18˚C (0˚F) SAE 80W or 80W–90
Differential oil (3RZ–FE, 5VZ–FE)	4WD Extra long models: 2.45 liters (2.58 US qts. 2.16 lmp. qts)	
	w/ Diff. lock Short models: 2.65 liters (2.80 US qts. 2.33 lmp. qts)	
	w/ Diff. lock Extra long models: 2.95 liters (3.18 US qts. 2.60 lmp. qts)	
	w/o Diff. lock: 2.55 liters (2.69 US qts. 2.24 lmp. qts)	

PP099–01

RECOMMENDED TOOLS

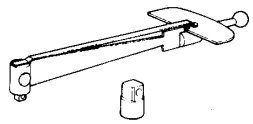	09025–00010	Torque Wrench (30 kgf–cm)	
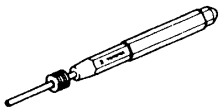	09031–00030	Pin Punch .	
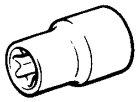	09044–00010	Torx Socket E14 .	
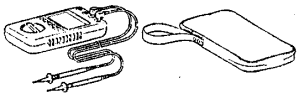	09082–00040	TOYOTA Electrical Tester.	
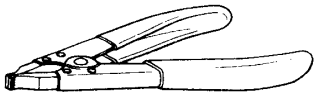	09905–00012	Snap Ring No.1 Expander .	
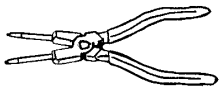	09905–00013	Snap Ring Pliers .	

PP1YR–02

SSM (Special Service Materials)

08826–00090	Seal Packing 1281, THREE BOND 1281 or equivalent (FIPG)	Front differential Rear differential (3RZ–FE, 5VZ–FE w/ Diff.lock)
08833–00070	Adhesive 1324, THREE BOND 1324 or equivalent	Front differential
08833–00080	Adhesive 1344 THREE BOND 1344 LOCTITE 242 or equivalent	Rear differential (3RZ–FE, 5VZ–FE w/ Diff. lock)
08833–00100	THREE BOND 1360K or equivalent	Rear differential (3RZ–FE w/o Diff. lock)

SUSPENSION AND AXLE

PP3HC–02

SST (Special Service Tools)

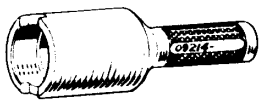	09214–76011	Crankshaft Pulley Replacer	Rear differential (3RZ–FE, 5VZ–FE w/ Diff. lock)
	09223–15020	Oil Seal & Bearing Replacer	Front differential
	09223–15030	Oil Seal & Bearing Replacer	Front axle (4WD and pre runner)
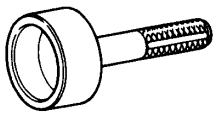	09223–56010	Crankshaft Rear Oil Seal Replacer	Rear axle
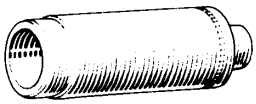	09226–10010	Crankshaft Front & Rear Bearing Replacer	Front differential
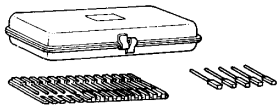	09240–00020	Wire Gauge Set	Front drive shaft (4WD)
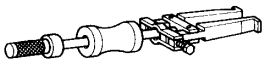	09308–00010	Oil Seal Puller	Front differential Rear axle Rear differential (3RZ–FE, 5VZ–FE w/ Diff. lock)
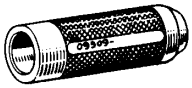	09309–37010	Transmission Bearing Replacer	Front differential Front suspension (4WD and pre runner)
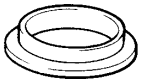	09316–12010	Transfer Bearing Replacer	Rear differential (Except 2RZ–FE)
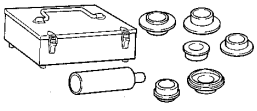	09316–60011	Transmission & Transfer Bearing Replacer	
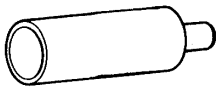	(09316–00011)	Replacer Pipe	Rear differential
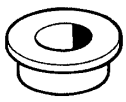	(09316–00021)	Replacer "A"	Rear differential

	(09316–00051)	Replacer ”D”	Rear axle Rear differential (3RZ–FE, 5VZ–FE w/ Diff. lock)
	09318–12010	Transfer Bearing Adjusting Nut Wrench	Front axle (4WD and pre runner)
	09330–00021	Companion Flange Holding Tool	Front differential Rear differential
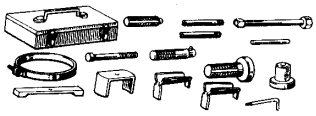	09350–20015	TOYOTA Automatic Transmission Tool Set	Front differential
	(09369–20040)	Piston Spring Compressor Set	
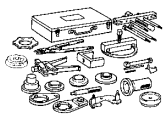	09350–32014	TOYOTA Automatic Transmission Tool Set	Front differential Rear differential
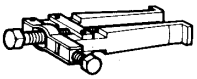	09308–10010	Oil Seal Puller	
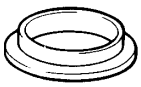	09502–12010	Differential Bearing Replacer	Front differential
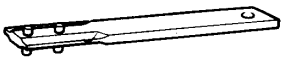	09504–00011	Differential Side Bearing Adjusting Nut Wrench	Rear differential (2RZ–FE and 3RZ–FE, 5VZ–FE w/ Diff. lock)
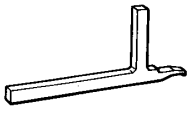	09504–22012	Differential Side Bearing Replacer	Rear differential (3RZ–FE, 5VZ–FE w/o Diff. lock)
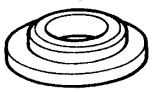	09506–30012	Differential Drive Pinion Rear Bearing Cone Replacer	Front differential Rear differential
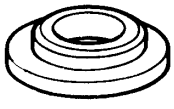	09506–35010	Differential Drive Pinion Rear Bearing Replacer	Front suspension (4WD and pre runner) Rear differential (3RZ–FE, 5VZ–FE w/o Diff. lock)
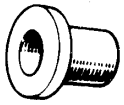	09515–30010	Rear Wheel Bearing Replacer	Rear axle

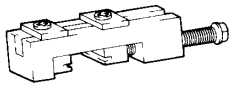	09521–24010	Drive Shaft Boot Clamping Tool	Front drive shaft (4WD)
	09521–25011	Rear Axle Shaft Puller	Rear axle
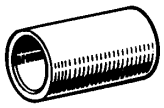	09523–36010	Rear Axle Hub Guide Tool	Rear differential (3RZ–FE, 5VZ–FE w/o Diff. lock)
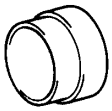	09527–17011	Rear Axle Shaft Bearing Remover	Front axle
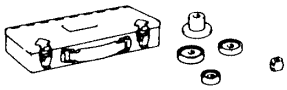	09550–10013	Replacer Set ”B”	
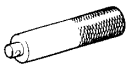	(09252–10010)	No. 1 Replacer Handle–	Rear differential Rear suspension
	(09553–10010)	Differential Side Bearing Replacer	Rear suspension
	(09557–10011)	Differential Drive Pinion Front Bearing Replacer	Rear differential (2RZ–FE)
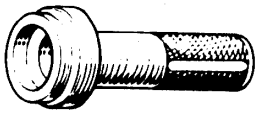	09554–22010	Differential Oil Seal Replacer	Front differential
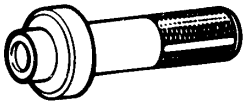	09554–30011	Differential Oil Seal Replacer	Rear differential (2RZ–FE)
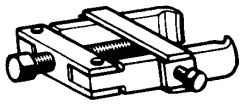	09556–22010	Drive Pinion Front Bearing Remover	Front differential Rear differential
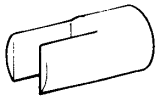	09564–32011	Differential Preload Adaptor	Front differential
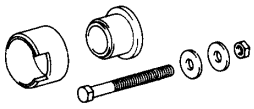	09570–22011	Differential Mounting Cushion Remover & Replacer	Front differential

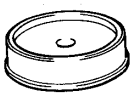	09608–32010	Steering Knuckle Oil Seal Replacer	Front differential
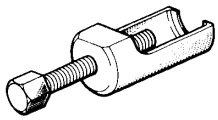	09610–20012	Pitman Arm Puller	Front suspension
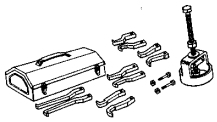	09612–65014	Steering Worm Bearing Puller	Front differential
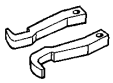	(09612–01020)	Claw ”B”	
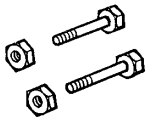	(09612–01050)	Hanger Pin with Nut	
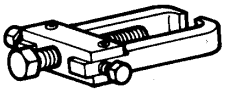	09628–62011	Ball Joint Puller	Front axle (2WD) Front drive shaft (4WD) Front suspension
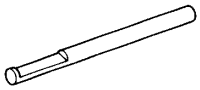	09631–10030	Oil Seal Remover	Front drive shaft (4WD)
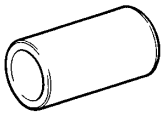	09632–36010	Steering Vane Pump Bearing Replacer	Front suspension (4WD and pre runner)
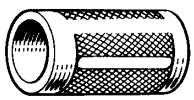	09636–20010	Upper Ball Joint Dust Cover Replacer	Front differential Rear differential
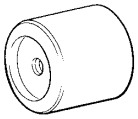	09649–17010	Steering Knuckle Tool	Front axle (4WD and pre runner) Rear differential (3RZ–FE, 5VZ–FE w/o Diff. lock)
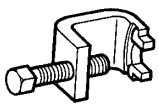	09650–17011	Hub Bolt Remover	Front axle (4WD) Rear axle
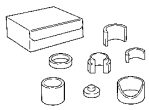	09710–28012	Front Suspension Bushing Tool Set	Rear suspension
	(09710–07062)	Bushing Replacer	

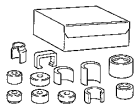	09710–30021	Suspension Bushing Tool Set	
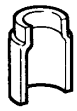	(09710–03031)	Bushing Remover	Front suspension (2WD)
	(09710–03051)	Bushing Replacer	Front axle (4WD)
	(09710–03071)	Remover	Front suspension (2WD)
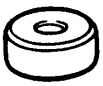	(09710–03101)	Bushing Replacer	Front suspension (2WD)
	(09710–03141)	Bushing Remover Base	Front suspension (2WD)
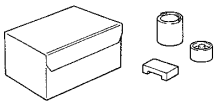	09710–30041	Rear Suspension Bushing Tool Set	Rear suspension
	(09710–03211)	Remover	
	09726–40010	Lower Control Shaft Bearing Replacer	Rear differential (3RZ–FE, 5VZ–FE w/ Diff. lock)
	09727–22011	Front Spring Compressor	Front suspension (2WD)
	(09727–23010)	Hook Set	
	(09727–23020)	Spacer	
	(09727–23030)	Rod Set	

	(09727–23040)	Attachment Set	
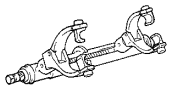	09727–30021	Coil Spring Compressor	Front suspension (4WD and pre runner)
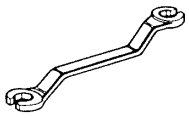	09751–36011	Brake Line Union Nut 10 x 12 mm Wrench	Rear axle
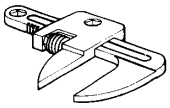	09922–10010	Variable Open Wrench	Front suspension (4WD and pre runner)
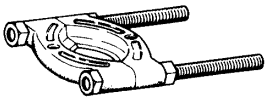	09950–00020	Bearing Remover	Front differential Rear differential
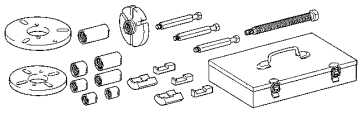	09950–30012	Puller A Set	
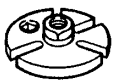	(09951–03010)	Upper Plate	Front differential Rear differential
	(09953–03010)	Center Bolt	Front differential Rear differential
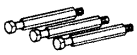	(09954–03010)	Arm	Front differential Rear differential
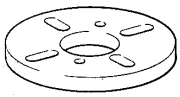	(09955–03030)	Lower Plate 130	Front differential Rear differential
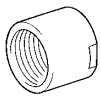	(09956–03020)	Adapter 18	Front differential Rear differential (2RZ–FE, 3RZ–FE, 5VZ–FE w/ Diff. lock)
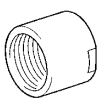	(09956–03050)	Adapter 24	Rear differential (3RZ–FE, 5VZ–FE w/o Diff. lock)
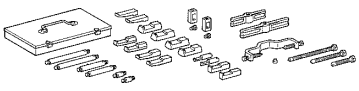	09950–40011	Puller B Set	

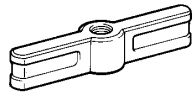	(09951–04010) Hanger 150	Front axle (4WD and pre runner), Fron differential, Front suspension (4WD and pre runner), Rear differential
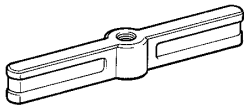	(09951–04020) Hanger 200	Front axle (4WD and pre runner)
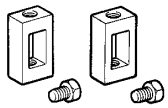	(09952–04010) Slide Arm	Front axle (4WD and pre runner), Fron differential, Front suspension (4WD and pre runner), Rear differential
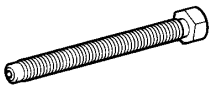	(09953–04020) Center Bolt 150	Front axle (4WD and pre runner), Fron differential, Front suspension (4WD and pre runner), Rear differential
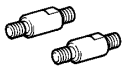	(09954–04010) Arm 25	Front axle (4WD and pre runner), Fron differential, Front suspension (4WD and pre runner), Rear differential
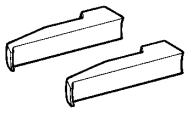	(09955–04011) Claw No.1	Front differential
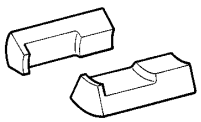	(09955–04031) Claw No.3	Front axle (4WD and pre runner), Front suspension (4WD and pre runner)
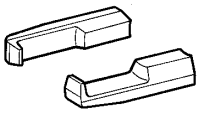	(09955–04061) Claw No.6	Front differential Rear differential
	(09957–04010) Attachment	Front axle (4WD and pre runner), Fron differential, Front suspension (4WD and pre runner), Rear differential
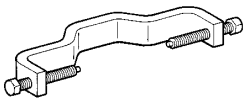	(09958–04011) Holder	Front axle (4WD and pre runner), Fron differential, Front suspension (4WD and pre runner), Rear differential
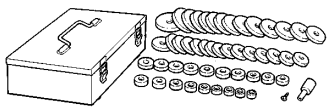	09950–60010 Replacer Set	
	(09951–00350) Replacer 35	Rear suspension
	(09951–00380) Replacer 38	Front differential

	(09951–00450) Replacer 45	Rear differential (2RZ–FE)
	(09951–00480) Replacer 48	Front differential Rear differential (Except 2RZ–FE)
	(09951–00490) Replacer 49	Front axle (2WD)
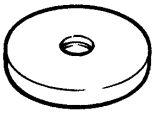	(09951–00540) Replacer 54	Front differential
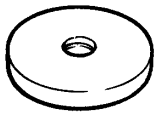	(09951–00550) Replacer 55	Rear differential (3RZ–FE, 5VZ–FE w/ Diff. lock)
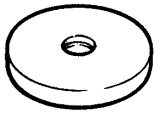	(09951–00560) Replacer 56	Rear axle
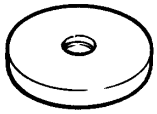	(09951–00610) Replacer 61	Rear axle
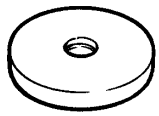	(09951–00640) Replacer 64	Front axle (2WD) Rear differential (3RZ–FE, 5VZ–FE w/o Diff. lock)
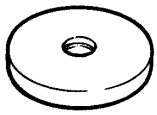	(09951–00650) Replacer 65	Front axle (4WD and pre runner) Front differential
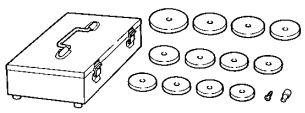	09950–60020 Replacer Set No.2	
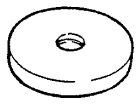	(09951–00710) Replacer 71	Front axle (2WD) Rear axle Rear differential
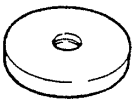	(09951–00730) Replacer 73	Rear differential (3RZ–FE, 5VZ–FE w/ Diff. lock)
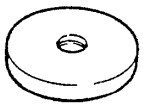	(09951–00790) Replacer 79	Front differential Rear differential

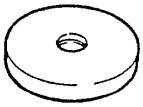	(09951–00810)	Replacer 81	Front axle (4WD)
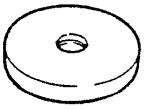	(09951–00890)	Replacer 89	Rear axle
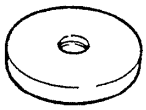	(09951–00910)	Replacer 91	Front axle (4WD and pre runner) Rear differential (3RZ–FE, 5VZ–FE w/o Diff. lock)
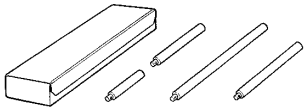	09950–70010	Handle Set	Front axle Front differential Rear axle Rear differential
	(09951–07150)	Handle 150	
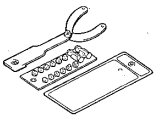	09960–10010	Variable Pin Wrench Set	Rear differential (3RZ–FE, 5VZ–FE w/ Diff. lock)
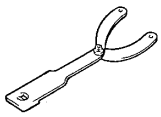	(09962–01000)	Variable Pin Wrench Arm Assy	
	(09963–00700)	Pin 7	

PP1YA–01

EQUIPMENT

Carburetor cleaner	Throttle body
Graduated cylinder	Injector
Heater	
Soft brush	Throttle body
Sound scope	Injector
OBDII scan tool	Engine speed
Thermometer	
Torque wrench	

PP1Y9–02

RECOMMENDED TOOLS

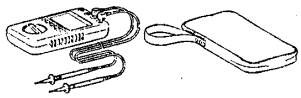	09082–00040	TOYOTA Electrical Tester.	
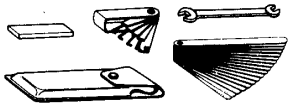	09200–00010	Engine Adjust Kit .	
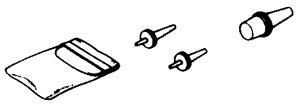	09258–00030	Hose Plug Set .	Plug for vacuum hose, fuel hose etc.

SFI (2RZ–FE, 3RZ–FE)

PP2G3–04

SST (Special Service Tools)

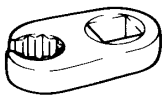	09023–38400	Union Nut Wrench 14mm	Fuel line flare nut
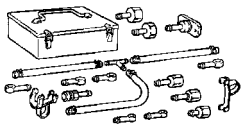	09268–41047	Injection Measuring Tool Set	
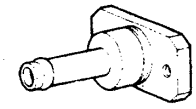	(09268–41091)	NO.7 Union	
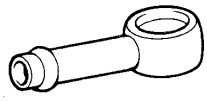	(90405–09015)	No.1 Union	
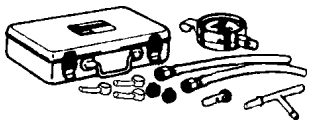	09268–45014	EFI Fuel Pressure Gauge	
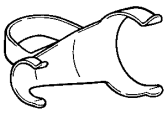	(09268–41100)	Clamp	Except California Spec.
	(09268–41300)	Clamp	California Spec.
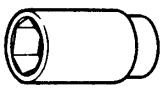	09816–30010	Oil Pressure Switch Socket	Knock sensor
	09842–30070	Wiring "F" EFI Inspection	
	09843–18040	Diagnosis Check Wire	

PP01F–04

EQUIPMENT

Carburetor cleaner	Throttle body
Graduated cylinder	Injector
OBD II scan tool	Engine speed
Soft brush	Throttle body
Sound scope	Injector
Torque wrench	

PP01E–05

RECOMMENDED TOOLS

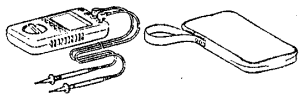	09082–00040	TOYOTA Electrical Tester.	
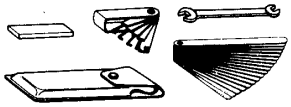	09200–00010	Engine Adjust Kit .	
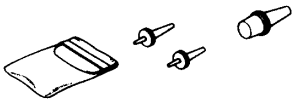	09258–00030	Hose Plug Set .	Plug for vacuum hose, fuel hose, etc.

SFI (5VZ–FE)

PP01D–13

SST (Special Service Tools)

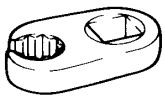	09023–38400	Union Nut Wrench 14mm	Fuel line flare nut
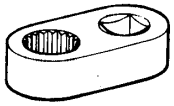	09205–76030	Cylinder Head Setting Bolt Tightening Adaptor	ECT sensor
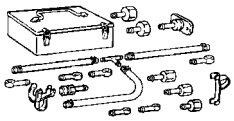	09268–41047	Injection Measuring Tool Set	
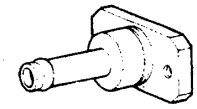	(09268–41091)	NO.7 Union	
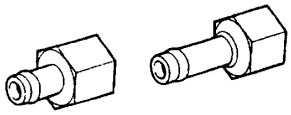	(09268–52011)	Injection Measuring Attachment	
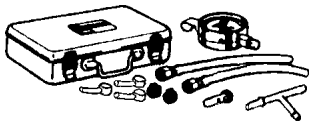	09268–45014	EFI Fuel Pressure Gauge	
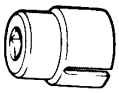	09817–16011	Back–up Light Switch Tool	Knock sensor
	09842–30070	Wiring ”F” EFI Inspection	
	09843–18040	Diagnosis Check Wire	

PP09K–05

EQUIPMENT

Belt tension gauge	Drive belt
Caliper gauge	PS vane pump (2RZ–FE, 3RZ–FE, 5VZ–FE)
Dial indicator	PS gear (2WD, 4WD and Pre runner)
Feeler gauge	PS vane pump (2RZ–FE, 3RZ–FE, 5VZ–FE)
Micrometer	PS vane pump (2RZ–FE, 3RZ–FE, 5VZ–FE)
Torque wrench	
Vernier calipers	PS vane pump (2RZ–FE, 3RZ–FE, 5VZ–FE)

PP09L–02

LUBRICANT

Item	Capacity	Classification
Power steering fluid Total	0.8 liters (0.9 US qts, 0.7 lmp.qts)	ATF DEXRON® II or III

PP09J–04

RECOMMENDED TOOLS

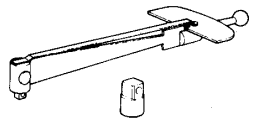	09025–00010	Small Torque Wrench (30 kgf–cm)	PS vane pump (2RZ–FE, 3RZ–FE, 5VZ–FE) PS gear (2WD, 4WD and Pre runner)
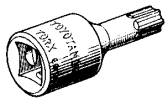	09042–00010	Torx Socket T30 .	Non–tilt steering column Tilt steering column
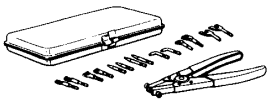	09904–00010	Expander Set .	
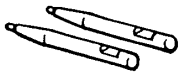	(09904–00050)	No. 4 Claw	
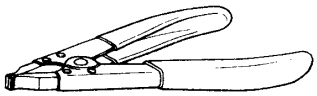	09905–00012	Snap Ring No.1 Expander .	
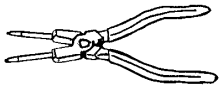	09905–00013	Snap Ring Pliers .	

PP1B9–09

SSM (Special Service Materials)

08833–00080	Adhesive 1344 THREE BOND 1344 LOCTITE 242 or equivalent	PS gear (2WD, 4WD and Pre runner)

STEERING

SST (Special Service Tools)

PP3HD–02

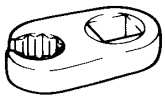	09023–12700	Union Nut Wrench 17mm	PS gear (2WD, 4WD and Pre runner)
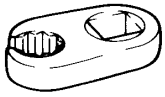	09023–38200	Union Nut Wrench 12mm	PS gear (2WD, 4WD and Pre runner)
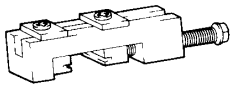	09521–24010	Drive Shaft Boot Clamping Tool	PS gear (2WD)
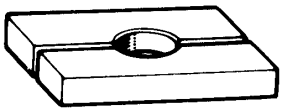	09527–20011	Rear Axle Shaft Bearing Remover	PS gear (2WD)
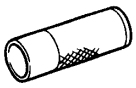	09608–04031	Front Hub Inner Bearing Cone Replacer	PS vane pump (2RZ–FE, 3RZ–FE)
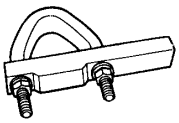	09612–00012	Rack & Pinion Steering Rack Housing Stand	PS gear (2WD, 4WD and Pre runner)
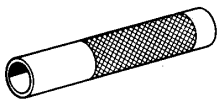	09612–22011	Tilt Handle Bearing Replacer	PS gear (2WD)
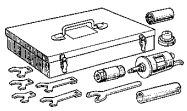	09612–24014	Steering Gear Housing Overhaul Tool Set	
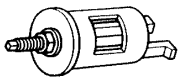	(09613–22011)	Steering Rack Shaft Bushing Puller	PS gear (2WD)
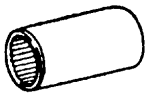	09616–00011	Steering Worm Bearing Adjusting Socket	PS gear (2WD, 4WD and Pre runner)
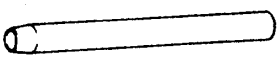	09631–00350	Steering Rack Cover 35	PS gear (4WD and Pre runner)
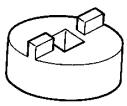	09631–10021	Rack Stopper Wrench	PS gear (2WD)

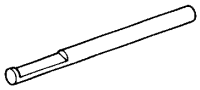	09631–10030	Oil Seal Remover	PS vane pump (2RZ–FE, 3RZ–FE)
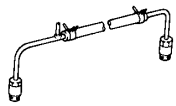	09631–12071	Steering Rack Oil Seal Test Tool	PS gear (2WD, 4WD and Pre runner)
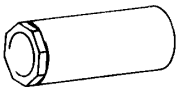	09631–20060	Bearing Guide Nut Wrench	PS gear (4WD and Pre runner)
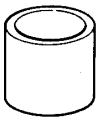	09631–20081	Seal Ring Tool	PS gear (2WD, 4WD and Pre runner)
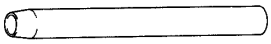	09631–20102	Steering Rack Cover ”H”	PS gear (2WD)
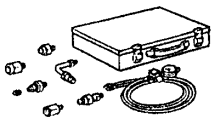	09640–10010	Power Steering Pressure Gauge Set	
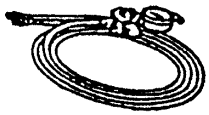	(09641–01010)	Gauge Assy	Power steering fluid
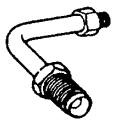	(09641–01030)	Attachment B	Power steering fluid
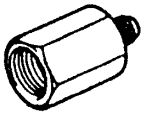	(09641–01060)	Attachment E	Power steering fluid
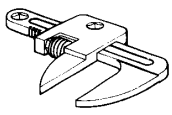	09922–10010	Variable Open Wrench	PS gear (2WD, 4WD and Pre runner)
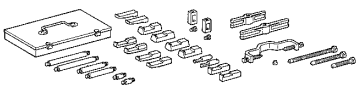	09950–40011	Puller B Set	
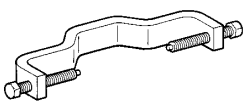	(09958–04011)	Holder	Tilt steering column
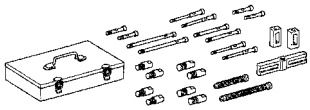	09950–50013	Puller C Set	

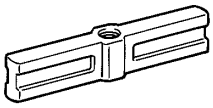	(09951–05010) Hanger 150	Non–tilt steering column Tilt steering column
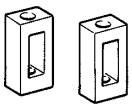	(09952–05010) Slide Arm	Non–tilt steering column Tilt steering column
	(09953–05010) Center Bolt 100	Non–tilt steering column Tilt steering column
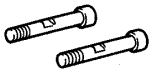	(09954–05021) Claw No.2	Non–tilt steering columu Tilt steering columu
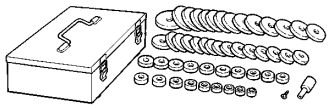	09950–60010 Replacer Set	
	(09951–00180) Replacer 18	PS gear (2WD, 4WD and Pre runner)
	(09951–00240) Replacer 24	PS gear (2WD)
	(09951–00250) Replacer 25	PS gear (2WD)
	(09951–00260) Replacer 26	PS gear (2WD, 4WD and Pre runner)
	(09951–00280) Replacer 28	PS gear (2WD, 4WD and Pre runner)
	(09951–00310) Replacer 31	PS gear (2WD)
	(09951–00320) Replacer 32	PS gear (2WD, 4WD and Pre runner)
	(09951–00330) Replacer 33	PS vane pump (5VZ–FE) PS gear (2WD, 4WD and Pre runner)

	(09951–00360) Replacer 36	PS gear (4WD and Pre runner)
	(09951–00400) Replacer 40	PS gear (2WD)
	(09951–00420) Replacer 42	PS gear (2WD)
	(09951–00490) Replacer 49	PS gear (4WD and Pre runner)
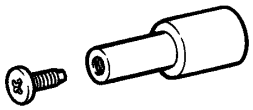	(09952–06010) Adapter	PS gear (2WD, 4WD and Pre runner)
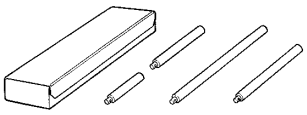	09950–70010 Handle Set	
	(09951–07100) Handle 100	PS vane pump (5VZ–FE) PS gear (4WD and Pre runner)
	(09951–07150) Handle 150	PS gear (2WD, 4WD and Pre runner)
	(09951–07200) Handle 200	PS gear (2WD)
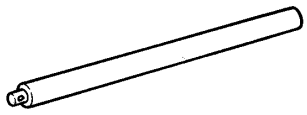	(09951–07360) Handle 360	PS gear (2WD, 4WD and Pre runner)
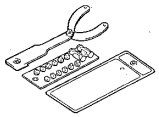	09960–10010 Variable Pin Wrench Set	
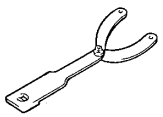	(09962–01000) Variable Pin Wrench Arm Assy	PS vane pump (2RZ–FE, 3RZ–FE, 5VZ–FE)
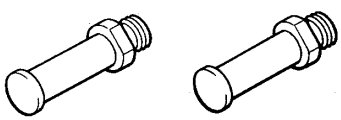	(09963–01000) Pin 10	PS vane pump (2RZ–FE, 3RZ–FE, 5VZ–FE)

PP07W–01

EQUIPMENT

Dial indicator	Commutator
Magnetic finger	
Pull scale	Brush spring
Sandpaper	Commutator
Torque wrench	
V–block	
Vernier calipers	Commutator, Brush

PP07V–02

RECOMMENDED TOOLS

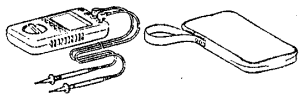	09082–00040 TOYOTA Electrical Tester.	

STARTING (2RZ–FE, 3RZ–FE)

PP3V1–01

SST (Special Service Tools)

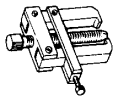	09286–46011	Injection Pump Spline Shaft Puller	Armature bearing
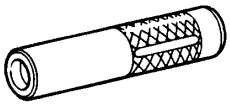	09201–41020	Valve Stem Oil Seal Replacer	Armature rear bearing
	09285–76010	Injection Pump Camshaft Bearing Cone Replacer	Armature rear bearing
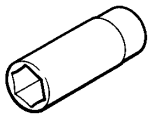	09810–38140	Starter Magnet Switch Nut Wrench 14	Terminal nut
	09820–00031	Starter Magnet Switch Nut Wrench 14	Armatuer rear bearing

PP026–01

EQUIPMENT

Dial indicator	Commutator
Magnetic finger	Steel ball
Press	Magnetic switch terminal kit
Pull scale	Brush spring
Sandpaper	Commutator
Torque wrench	
V–block	Commutator
Vernier calipers	Commutator Brush

PP025–05

RECOMMENDED TOOLS

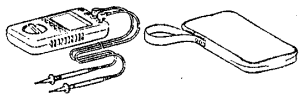	09082–00040 TOYOTA Electrical Tester.	

STARTING (5VZ–FE)

PP3V2–01

SST (Special Service Tools)

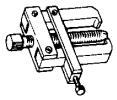	09286–46011	Injection Pump Spline Shaft Puller	Armature bearing
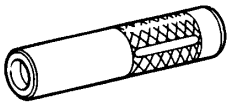	09201–41020	Valve Stem Oil Seal Replacer	Armature front bearing
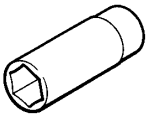	09810–38140	Starter Magnet Switch Nut Wrench 14	Terminal kit
	09820–00031	Starter Magnet Switch Nut Wrench 14	Armature rear bearing

PP0AE–01

EQUIPMENT

Calipers	
Dial indicator	
Feeler gauge	
Micrometer	
Torque wrench	

PP0AF–01

LUBRICANT

Item	Capacity	Classification
Transfer oil	1.0 liters (1.1 US qts, 0.9 Imp. qts)	API GL–4 or GL–5 SAE 75W–90

PP0AD–01

RECOMMENDED TOOLS

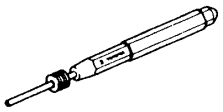	09031–00030	Pin Punch .	
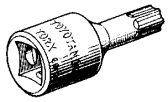	09042–00010	Torx Socket T30 .	
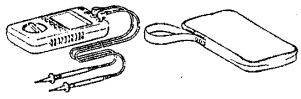	09082–00040	TOYOTA Electrical Tester.	
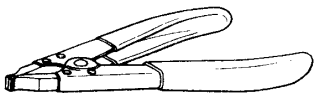	09905–00012	Snap Ring No.1 Expander .	

TRANSFER

PP0AC–03

SST (Special Service Tools)

	09223–15020	Oil Seal & Bearing Replacer	Planetary gear outer bearing
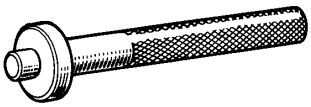	09304–12012	Input Shaft Front Bearing Replacer	Shift fork shaft oil seal
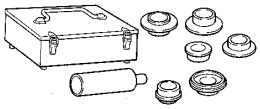	09316–60011	Transmission & Transfer Bearing Replacer	
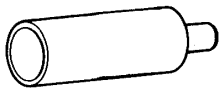	(09316–00011)	Replacer Pipe	High and low clutch hub Rear output shaft bearing Front case oil seal
	(09316–00071)	Replacer ”F”	Rear output shaft bearing
	09330–00021	Companion Flange Holding Tool	Companion flange
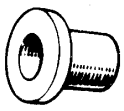	09515–30010	Rear Wheel Bearing Replacer	Planetary gear outer bearing
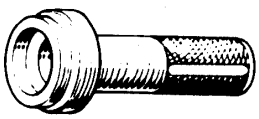	09554–22010	Differential Oil Seal Replacer	Extension housing oil seal
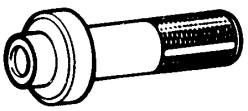	09554–30011	Differential Oil Seal Replacer	Planetary gear outer bearing
	09555–55010	Differential Drive Pinion Bearing Replacer	Driven sprocket rear bearing Rear output shaft bearing Planetary gear outer bearing
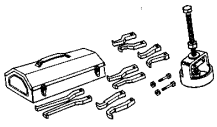	09612–65014	Steering Worm Bearing Puller	
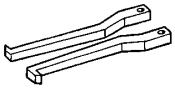	(09612–01030)	Claw ”C”	Planetary gear inner bearing

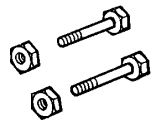	(09612–01050)	Hanger Pin with Nut	Planetary gear inner bearing
	09950–40011	Puller B Set	
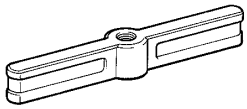	(09951–04020)	Hanger 200	Companion flange
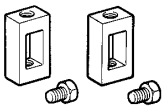	(09952–04010)	Slide Arm	Companion flange
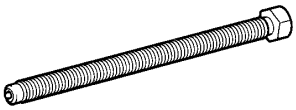	(09953–04030)	Center Bolt 200	Companion flange
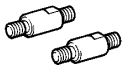	(09954–04010)	Arm 25	Companion flange
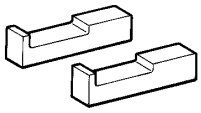	(09955–04051)	Claw No.5	Companion flange
	(09957–04010)	Attachment	Companion flange
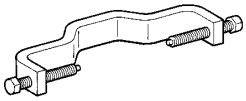	(09958–04011)	Holder	Companion flange
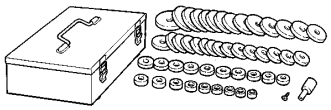	09950–60010	Replacer Set	
	(09951–00220)	Replacer 22	Companion flange oil seal
	(09951–00350)	Replacer 35	Companion flange oil seal
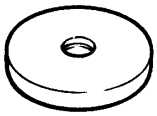	(09951–00570)	Replacer 57	Planetary gear inner bearing

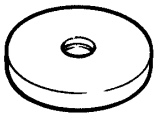	(09951–00590) Replacer 59	Front bearing retainer oil seal
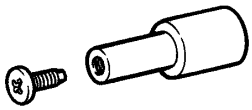	(09952–06010) Adapter	Companion flange oil seal
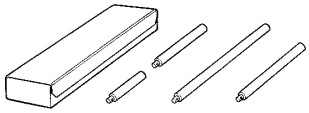	09950–70010 Handle Set	
	(09951–07100) Handle 100	Front bearing retainer oil seal Planetary gear outer bearing Planetary gear inner bearing Companion flange oil seal

PROPELLER SHAFT ASSEMBLY (2WD)

COMPONENTS

PR00P–02

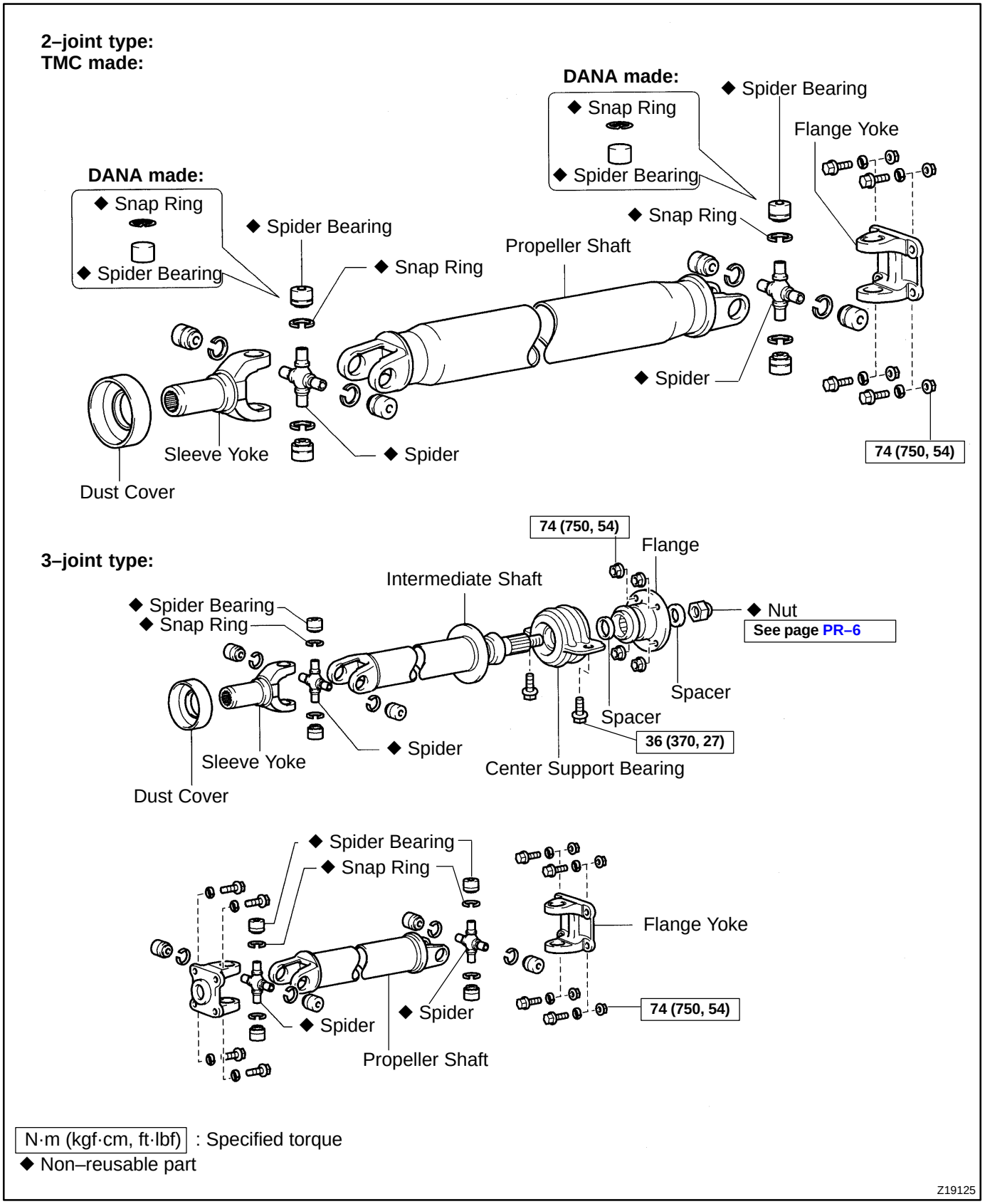

N·m (kgf·cm, ft·lbf) : Specified torque

◆ Non–reusable part

Z19125

PR00R–04

DISASSEMBLY

NOTICE:

Be careful not to grip the propeller shaft tube too tightly in a vise as this will cause deformation.

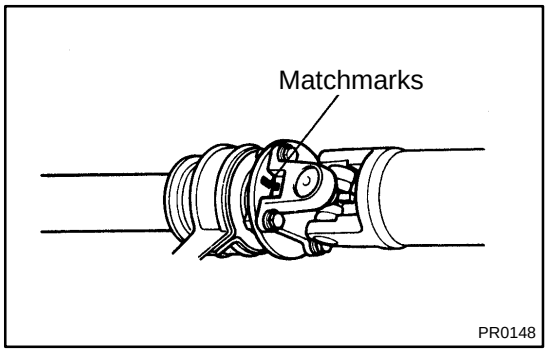

1. 3–joint type:

SEPARATE PROPELLER SHAFT AND INTERMEDIATE SHAFT

(a) Place matchmarks on the flanges.

(b) Remove the 4 nuts, bolts and washers.

(c) Separate the propeller shaft and intermediate shaft.

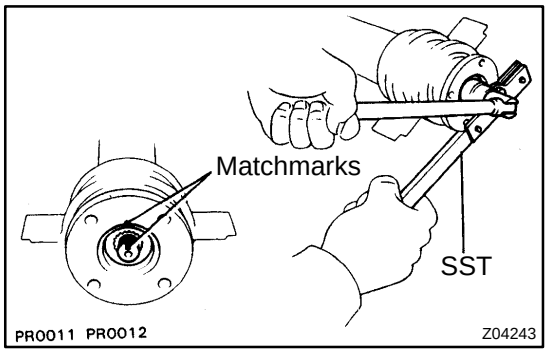

2. 3–joint type:

REMOVE FLANGE FROM INTERMEDIATE SHAFT

(a) Using a chisel and hammer, loosen the staked part of the nut.

(b) Using SST to hold the flange, remove the nut and spacer.
SST 09330–00021

(c) Place matchmarks on the flange and shaft.

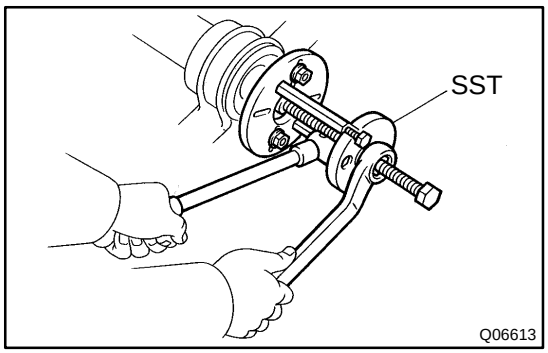

(d) Using SST, remove the flange from the intermediate shaft.
SST 09950–30012 (09951–03010, 09953–03010, 09954–03010, 09955–03030, 09956–03020)

(e) Remove the spacer.

3. 3–joint type:

REMOVE CENTER SUPPORT BEARING FROM INTERMEDIATE SHAFT

PR00S–02

INSPECTION

NOTICE:

Be careful not to grip the propeller shaft tube too tightly in a vise as this will cause deformation.

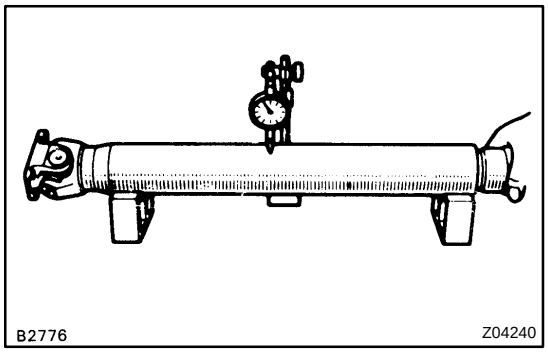

1. INSPECT PROPELLER SHAFT AND INTERMEDIATE SHAFT FOR DAMAGE OR RUNOUT

(a) Inspect the shafts for wear or damage.

(b) Using a dial indicator, check the runout of the shafts.

Maximum runout: 0.8 mm (0.031 in.)

If the shaft runout exceeds the maximum, replace the shaft.

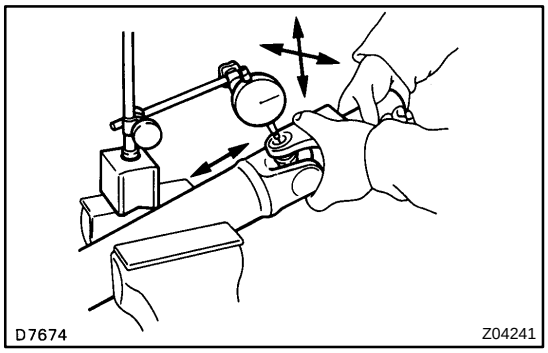

2. INSPECT SPIDER BEARING

(a) Inspect the spider bearings for wear or damage.

(b) Using a dial indicator, check the spider bearing axial play by turning the yoke while holding the shaft tightly.

Maximum bearing axial play: 0.05 mm (0.0020 in.)

If the spider bearing axial play exceeds the maximum, replace the spider bearing (See page PR–17).

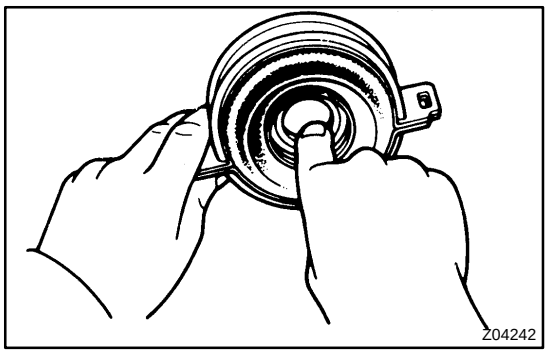

3. 3–joint type:

INSPECT CENTER SUPPORT BEARING FOR WEAR OR DAMAGE

Check that the bearing turns freely.

If the bearing is damaged, worn, or does not turn freely, replace it.

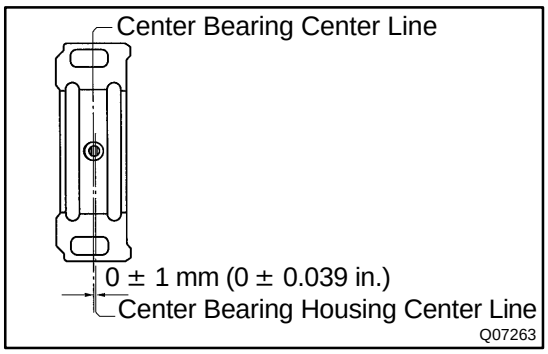

PR00U–02

INSTALLATION

Installation is in the reverse order of removal (See page PR–3).

HINT:

3–joint type:

- Center bearing center line and the center bearing housing center line must be adjusted within 0 ± 1 mm (0 ± 0.039 in.) of each other in the vehicles front and rear direction when the vehicle is unloaded.
- When adjusting the center bearing housing center line, it should be perpendicular to the axis of front propeller shaft.

PR00T–02

REASSEMBLY

NOTICE:

Be careful not to grip the propeller shaft tube too tightly in a vise as this will cause deformation.

HINT:

When replacing the propeller shaft, install new parts facing, as shown in the illustration.

3–joint type:

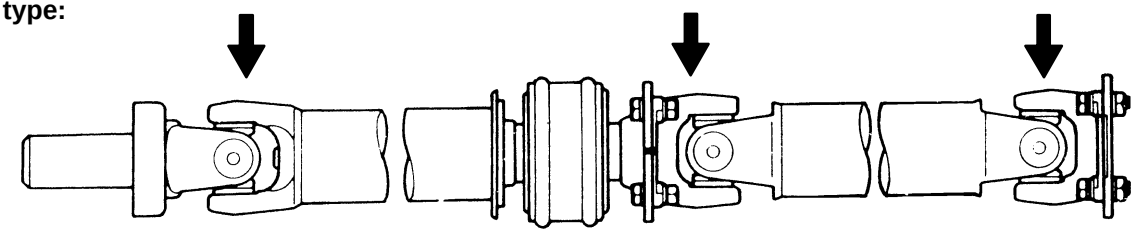

Q07232

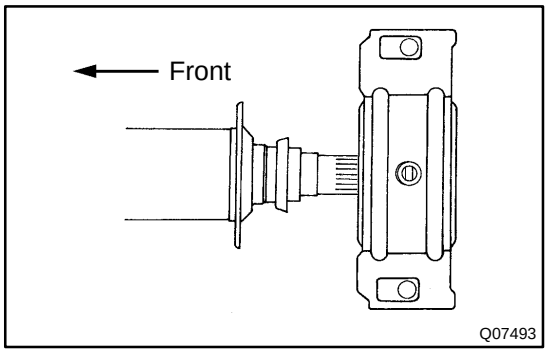

Q07493

1. 3–joint type:

INSTALL CENTER SUPPORT BEARING ON INTERMEDIATE SHAFT

Install the center support bearing and spacer.

HINT:

Install the center support bearing with the cutout toward the rear.

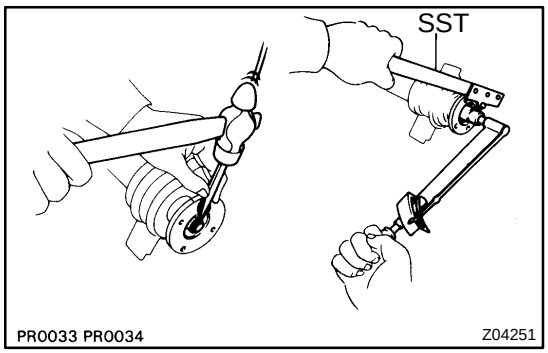

PR0033 PR0034 Z04251

2. 3–joint type:

INSTALL FLANGE ON INTERMEDIATE SHAFT

(a) Coat the splines of the intermediate shaft with MP grease.

(b) Place the flange on the shaft and align the matchmarks.

HINT:

If replacing either the center flange or intermediate shaft, reassemble them so that the front flange yoke of the intermediate shaft and the rear flange yoke of the propeller shaft are facing in the same direction.

(c) Install the spacer.

(d) Using SST to hold the flange, press the bearing into position by tightening down a new nut.

SST 09330–00021

Torque: 181 N·m (1,850 kgf·cm, 134 ft·lbf)

(e) Loosen the nut.

(f) Torque the nut again.

Torque: 69 N·m (700 kgf·cm, 51 ft·lbf)

(g) Using a chisel and hammer, stake the nut.

3. 3–joint type:
CONNECT PROPELLER SHAFT AND INTERMEDIATE SHAFT

(a) Align the matchmarks on the flanges and connect the flanges with the 4 bolts, washers and nuts.

HINT:

If replacing either the center flange or intermediate shaft, reassemble them so that the front flange yoke of the intermediate shaft and the rear flange yoke of the propeller shaft are facing in the same direction.

(b) Torque the nuts.
Torque: 74 N·m (750 kgf·cm, 54 ft·lbf)

PR00Q–02

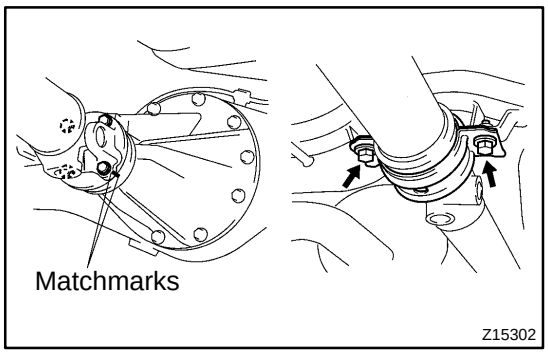

REMOVAL

REMOVE PROPELLER SHAFT

(a) Place matchmarks on the propeller shaft and differential flanges.

(b) Remove the 4 nuts, bolts and washers.
Torque: 74 N·m (750 kgf·cm, 54 ft·lbf)

(c) 3–joint type:
Remove the center support bearing 2 set bolts from the frame crossmember.
Torque: 36 N·m (370 kgf·cm, 27 ft·lbf)

(d) Pull the sleeve yoke from the transmission and remove the propeller shaft.

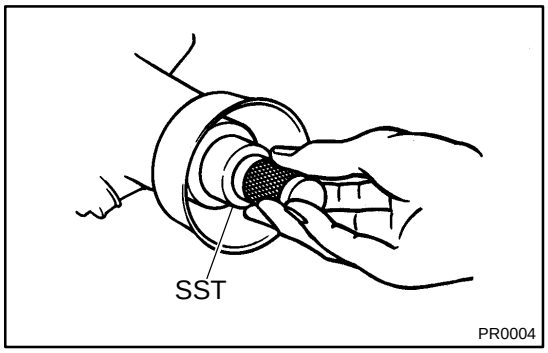

(e) Insert SST in the transmission to prevent oil leakage.
SST 09325–20010 (2–joint type),
09325–40010 (3–joint type)

PROPELLER SHAFT ASSEMBLY (4WD and PRE RUNNER)

PR00V–02

COMPONENTS

HINT:

Pre runner is the models described below.

RZN191L–TRPDKAB, RZN196L–CRPDKAB, VZN195L–CRPDKAB

Front propeller shaft (4WD):

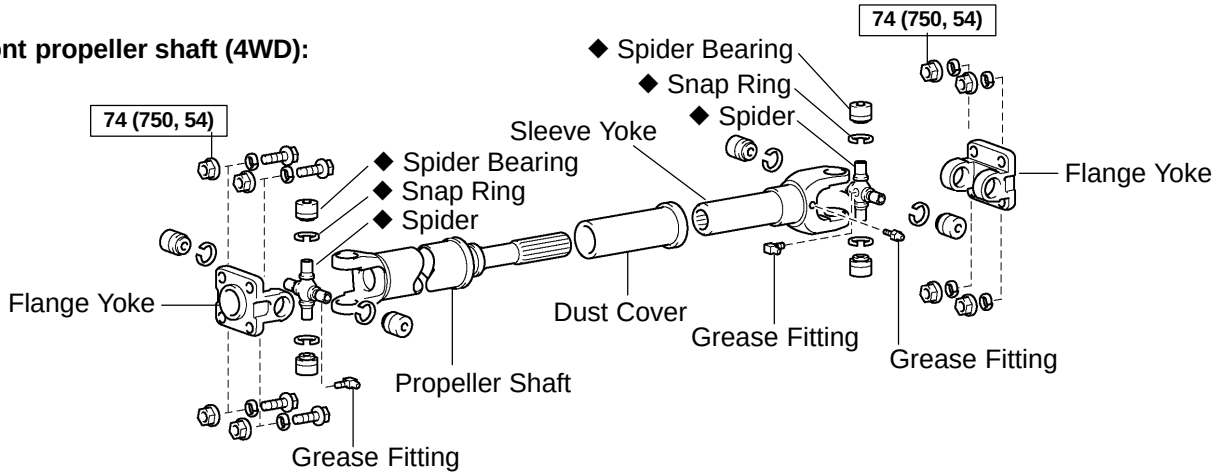

Propeller shaft (pre runner) and rear propeller shaft (4WD):

2–joint type:

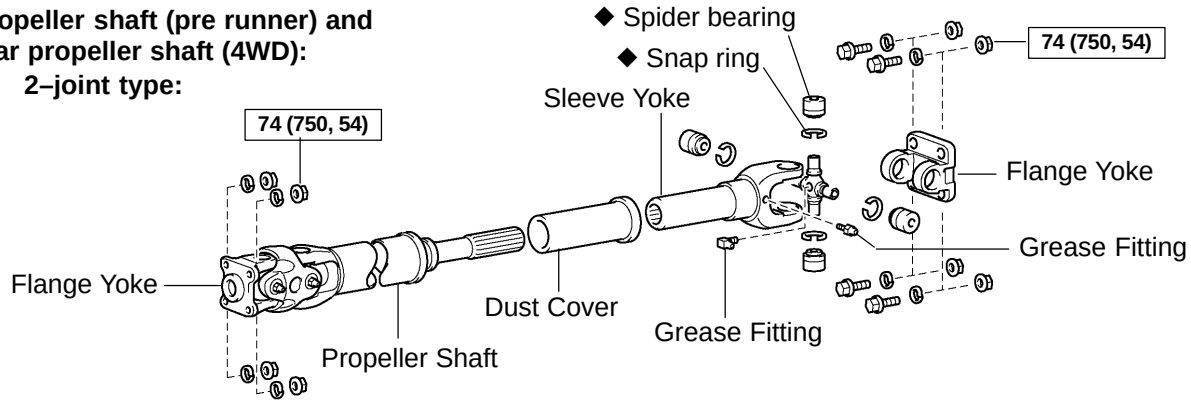

3–joint type:

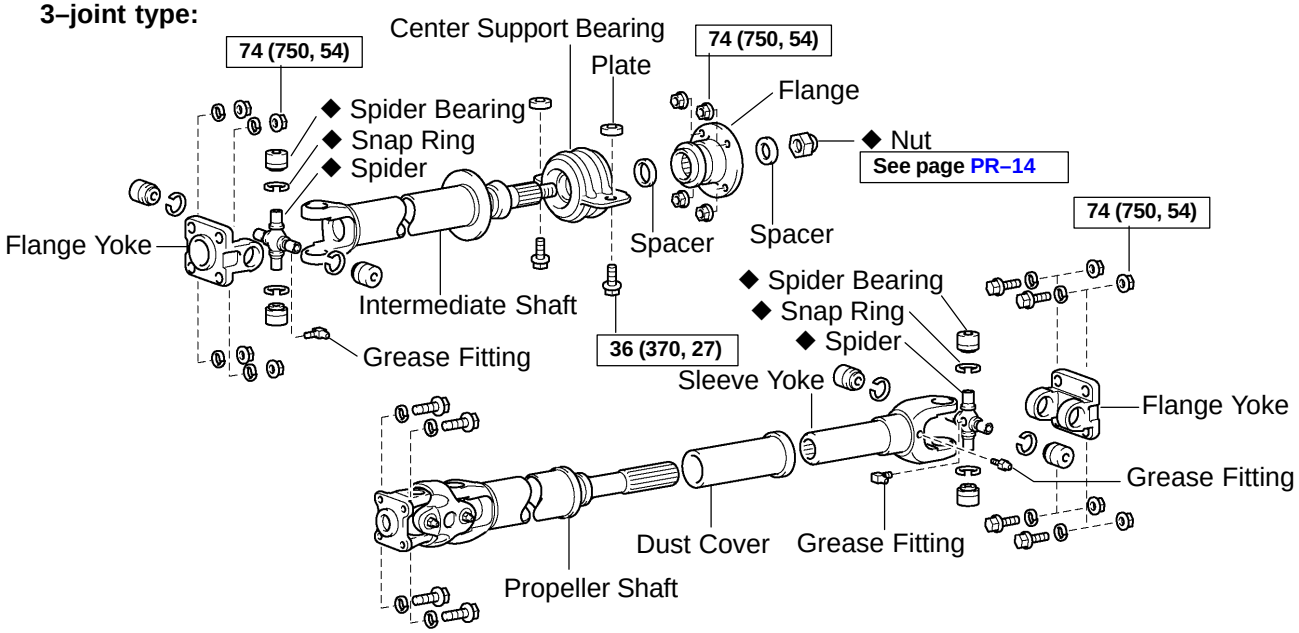

N·m (kgf·cm, ft·lbf) : Specified torque

◆ Non–reusable part

F01900

PR04Y–02

DISASSEMBLY

NOTICE:

Be careful not to grip the propeller shaft tube too tightly in a vise as this will cause deformation.

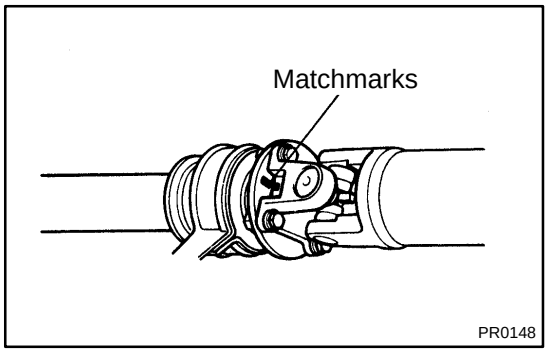

1. 3–joint type:

SEPARATE PROPELLER SHAFT AND INTERMEDIATE SHAFT

(a) Place matchmarks on the flanges.

(b) Remove the 4 nuts, bolts and washers.

(c) Separate the propeller shaft and intermediate shaft.

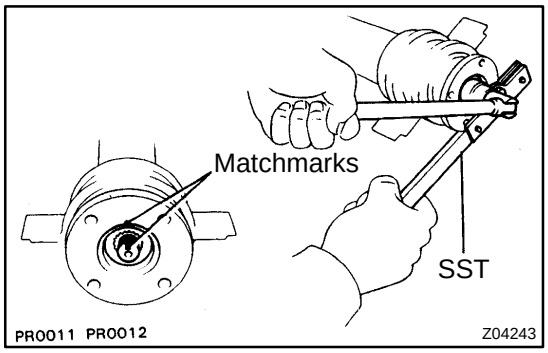

2. 3–joint type:

REMOVE FLANGE FROM INTERMEDIATE SHAFT

(a) Using a chisel and hammer, loosen the staked part of the nut.

(b) Using SST to hold the flange, remove the nut and spacer.
SST 09330–00021

(c) Place matchmarks on the flange and shaft.

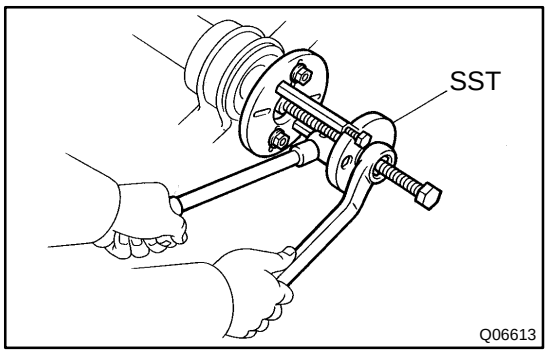

(d) Using SST, remove the flange from the intermediate shaft.
SST 09950–30012 (09951–03010, 09953–03010, 09954–03010, 09955–03030, 09956–03020)

(e) Remove the spacer.

3. 3–joint type:

REMOVE CENTER SUPPORT BEARING FROM INTERMEDIATE SHAFT

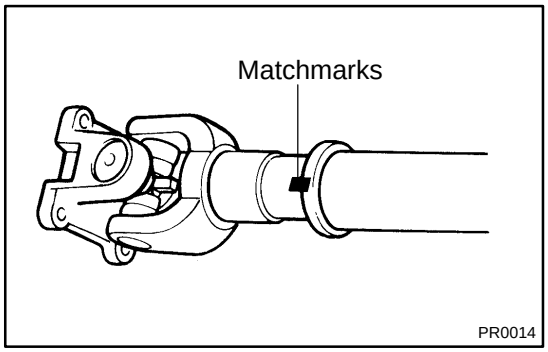

4. REMOVE SLEEVE YOKE FROM PROPELLER SHAFT

(a) Place matchmarks on the sleeve yoke and shaft.

(b) Pull out the sleeve yoke from the shaft.

(c) Remove the dust cover from the shaft.

PR04Z–01

INSPECTION

NOTICE:

Be careful not to grip the propeller shaft tube too tightly in a vise as this will cause deformation.

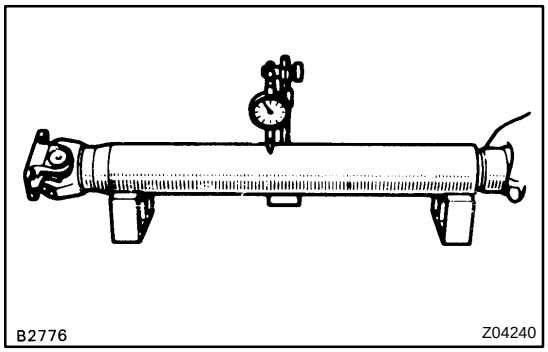

1. INSPECT PROPELLER SHAFT AND INTERMEDIATE SHAFT FOR DAMAGE OR RUNOUT

(a) Inspect the shafts for wear or damage.

(b) Using a dial indicator, check the runout of the shafts.

Maximum runout: 0.8 mm (0.031 in.)

If the shaft runout exceeds the maximum, replace the shaft.

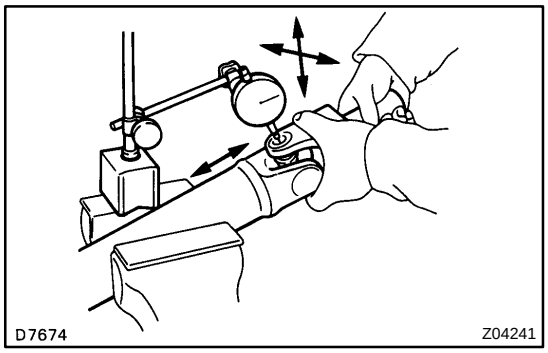

2. INSPECT SPIDER BEARING

(a) Inspect the spider bearings for wear or damage.

(b) Using a dial indicator, check the spider bearing axial play by turning the yoke while holding the shaft tightly.

Maximum bearing axial play: 0.05 mm (0.0020 in.)

If the spider bearing axial play exceeds the maximum, replace the spider bearing (See page PR–17).

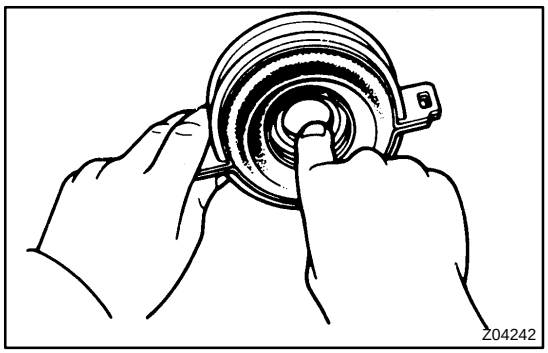

3. 3–joint type:

INSPECT CENTER SUPPORT BEARING FOR WEAR OR DAMAGE

Check that the bearing turns freely.

If the bearing is damaged, worn, or does not turn freely, replace it.

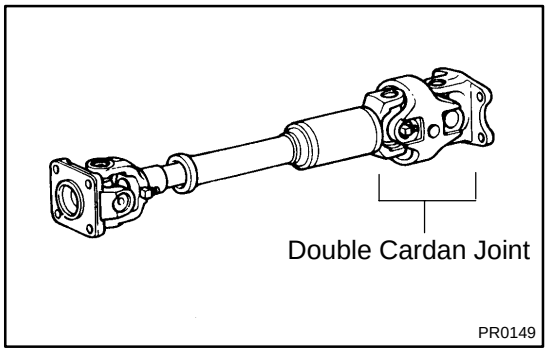

4. w/ Double cardan joint propeller shaft:

INSPECT WITH DOUBLE CARDAN JOINT PROPELLER SHAFT

(a) Inspect the shaft for wear or damage.

(b) Inspect the double cardan joint for wear or damage.

If any problem is found, replace the propeller shaft assembly.

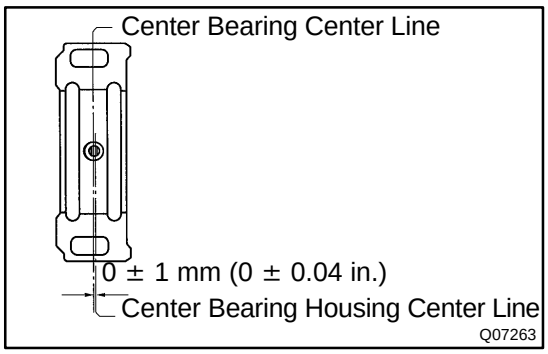

PR051–01

INSTALLATION

Installation is in the reverse order of removal (See page PR–11).

HINT:

- Propeller shaft (pre runner) and rear propeller shaft (4WD) of 3–joint type:
  Center bearing center line and the center bearing housing center line must be adjusted within 0 ± 1 mm (0 ± 0.04 in.) of each other in the vehicles front and rear direction when the vehicle is unloaded.
- Propeller shaft (pre runner) and rear propeller shaft (4WD) of 3–joint type:
  When adjusting the center bearing housing center line, it should be perpendicular to the axis of front propeller shaft.
- With a grease gun, pump grease into each fitting until it begins to flow around the oil seal.
  Grease:
  Spiders:
  Lithium base chassis grease, NLGI No. 2.
  Sleeve yoke and double cardan joint:
  Molybdenum disulfide lithium base chassis grease, NLGI No. 2.

PR050–02

REASSEMBLY

NOTICE:

Be careful not to grip the propeller shaft tube too tightly in a vise as this will cause deformation.

HINT:

When replacing the propeller shaft, install new parts facing, as shown in the illustration.

Front:

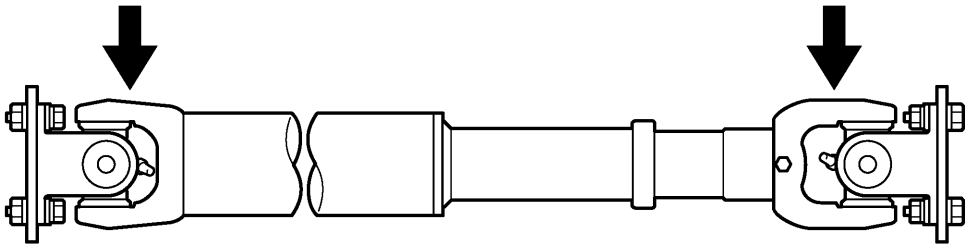

Rear:

2–joint type:

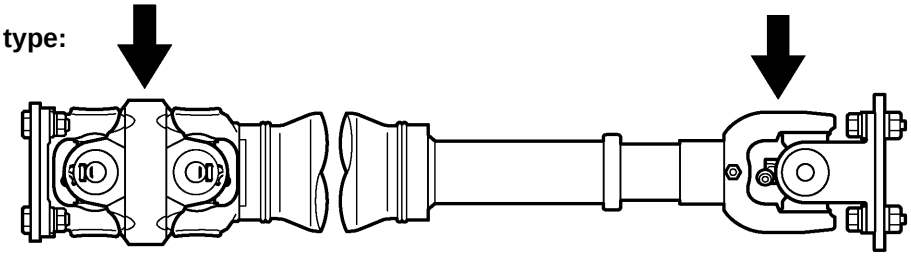

3–joint type:

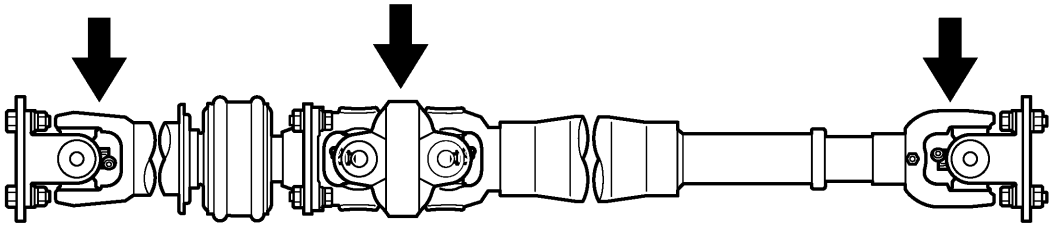

T

F14676

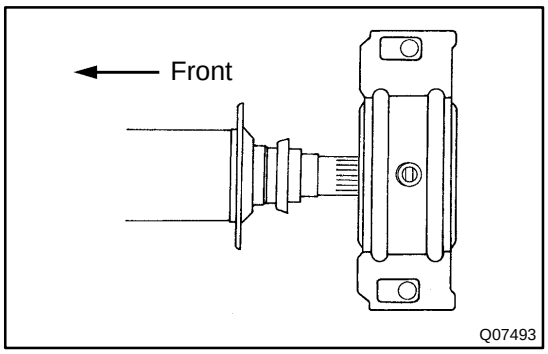

1. 3–joint type:
INSTALL CENTER SUPPORT BEARING ON INTERMEDIATE SHAFT

Install the center support bearing and spacer.

HINT:

Install the center support bearing with the cutout toward the rear.

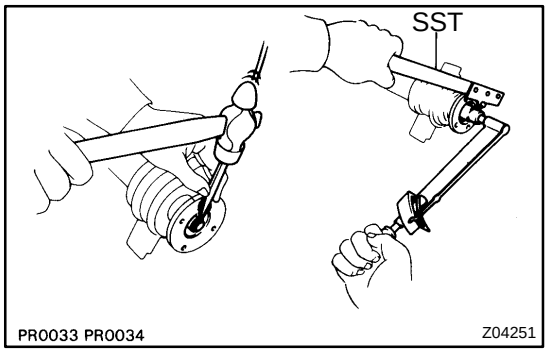

2. 3–joint type:
INSTALL FLANGE ON INTERMEDIATE SHAFT

(a) Coat the splines of the intermediate shaft with MP grease.

(b) Place the flange on the shaft and align the matchmarks.

HINT:

If replacing either the center flange or intermediate shaft, reassemble them so that the front flange yoke of the intermediate shaft and the rear flange yoke of the propeller shaft are facing in the same direction.

(c) Install the spacer.

(d) Using SST to hold the flange, press the bearing into position by tightening down a new nut.

SST 09330–00021

Torque: 181 N·m (1,850 kgf·cm, 134 ft·lbf)

(e) Loosen the nut.

(f) Torque the nut again.

Torque: 69 N·m (700 kgf·cm, 51 ft·lbf)

(g) Using a chisel and hammer, stake the nut.

3. 3–joint type:
CONNECT PROPELLER SHAFT AND INTERMEDIATE SHAFT

(a) Align the matchmarks on the flanges and connect the flanges with the 4 bolts, washers and nuts.

HINT:

If replacing either the center flange or intermediate shaft, reassemble them so that the front flange yoke of the intermediate shaft and the rear flange yoke of the propeller shaft are facing in the same direction.

(b) Torque the nuts.

Torque: 74 N·m (750 kgf·cm, 54 ft·lbf)

4. INSERT SLEEVE YOKE INTO PROPELLER SHAFT

(a) Apply grease to the propeller shaft spline and sleeve yoke sliding surface.

Grease:

Molybdenum disulfide lithium base chassis grease, NLGI No. 2.

(b) Install the dust cover to the shaft.

(c) Align the matchmarks on the yoke and propeller shaft.

PR04X–01

REMOVAL

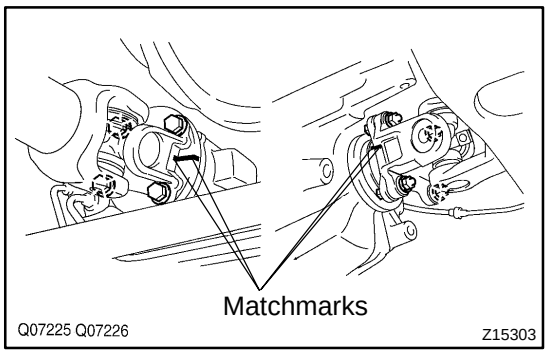

1. 4WD:

REMOVE FRONT PROPELLER SHAFT

(a) Place matchmarks on the propeller shaft and front differential flanges.

(b) Remove the 4 nuts, bolts and washers.
Torque: 74 N·m (750 kgf·cm, 54 ft·lbf)

(c) Suspend the front side of the propeller shaft.

(d) Place matchmarks on the propeller shaft and transfer flanges.

(e) Remove the 4 nuts and washers.
Torque: 74 N·m (750 kgf·cm, 54 ft·lbf)

(f) Remove the front propeller shaft.

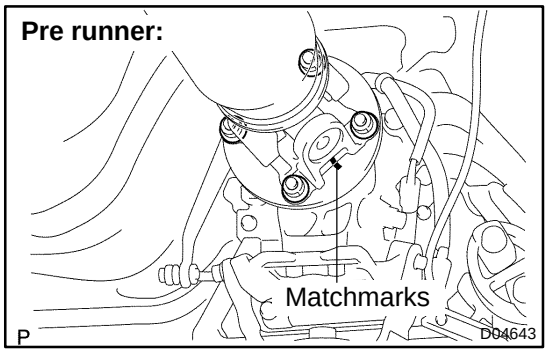

2. REMOVE PROPELLER SHAFT (PRE RUNNER) AND REAR PROPELLER SHAFT (4WD)

(a) Place matchmarks on the propeller shaft, transmission (pre runner) and transfer (4WD) flanges.

(b) Remove the 4 nuts and washers.
Torque: 74 N·m (750 kgf·cm, 54 ft·lbf)

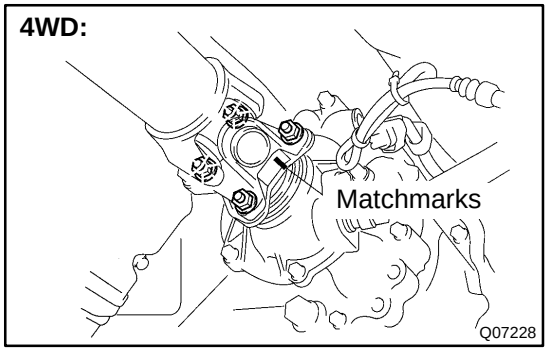

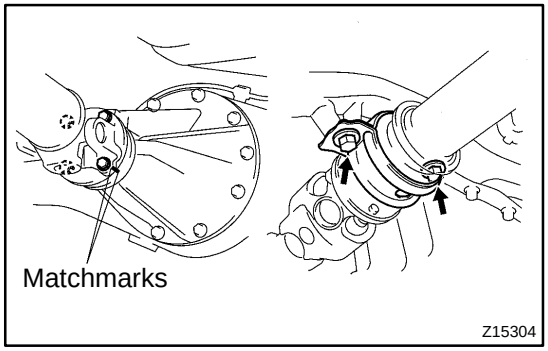

(c) Place matchmarks on the propeller shaft and rear differential flanges.

(d) Remove the 4 nuts, bolts and washers.
Torque: 74 N·m (750 kgf·cm, 54 ft·lbf)

(e) 3–joint type:
Remove the center support bearing 2 set bolts and 2 plates from the frame crossmember.
Torque: 36 N·m (370 kgf·cm, 27 ft·lbf)

(f) Remove the propeller shaft.

SPIDER BEARING

PR011–04

REPLACEMENT

NOTICE:

Be careful not to grip the propeller shaft tube too tightly in a vise as this will cause deformation.

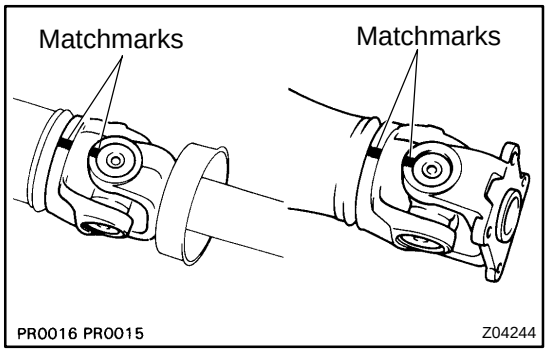

1. PLACE MATCHMARKS ON SHAFT AND YOKE

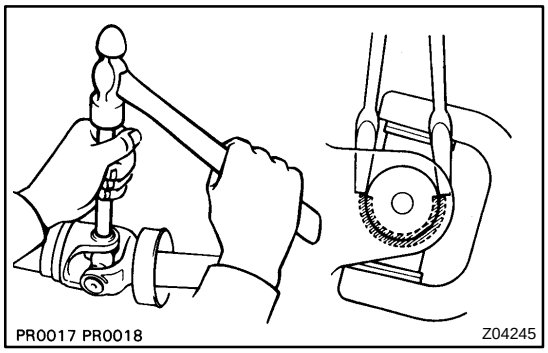

2. TMC made:
REMOVE SNAP RING

(a) Using a brass bar and hammer, slightly tap in the bearing outer races.

(b) Using 2 screwdrivers, remove the 4 snap rings from the grooves.

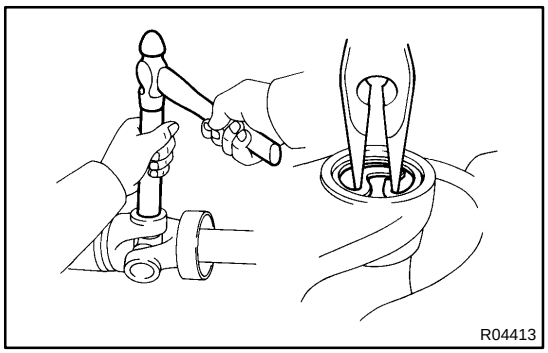

3. DANA made:
REMOVE SNAP RING

(a) Using a brass bar and hammer, slightly tap in the bearing outer races.

(b) Using needle nose pliers, remove the 4 snap rings from the grooves.

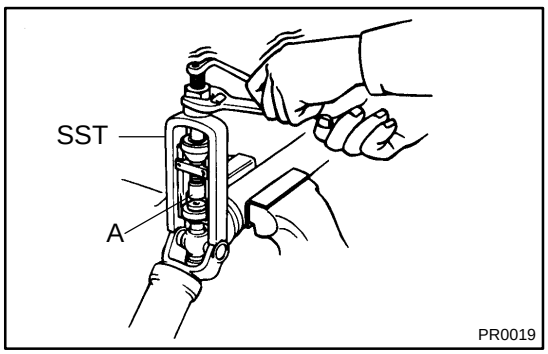

4. REMOVE SPIDER BEARING

(a) Using SST, push out the bearing from the propeller shaft.
SST 09332–25010

HINT:

Sufficiently raise the part indicated by ”A” so that it does not come into contact with the bearing.

(b) Clamp the bearing outer race in a vise and tap off the propeller shaft with a hammer.

HINT:
Remove the bearing on the opposite side in the same procedure.

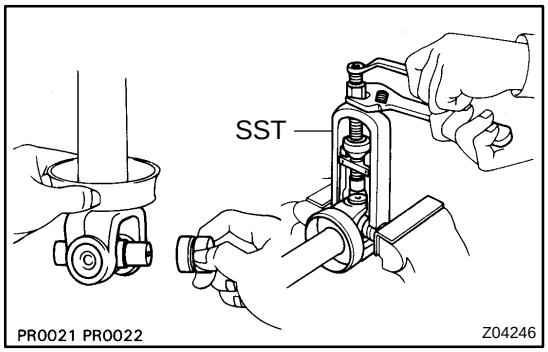

(c) Install the 2 removed bearing outer races to the spider.
(d) Using SST, push out the bearing from the yoke.
SST 09332–25010
(e) Clamp the outer bearing race in a vise and tap off the yoke with a hammer.

HINT:
Remove the bearing on the opposite side in the same procedure.

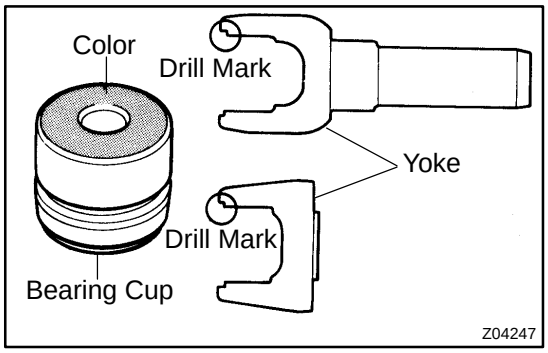

5. SELECT SPIDER BEARING

Select the bearing according to whether or not there is a drill mark on the yoke section.

Yoke	Bearing
With drill mark	With color mark (Red)
No drill mark	No color mark

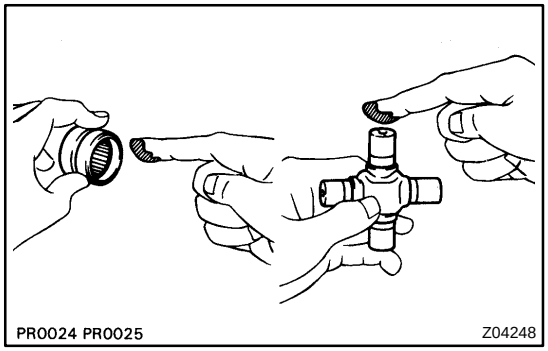

6. INSTALL SPIDER BEARING

(a) Apply MP grease to a new spider and bearings.

NOTICE:

Be careful not to apply too much grease.

(b) Align the matchmarks on the yoke and shaft.
(c) Fit the spider into the yoke.

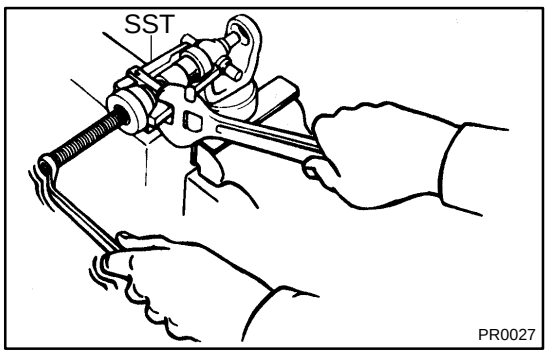

(d) Using SST, install new bearings on the spider.
SST 09332–25010

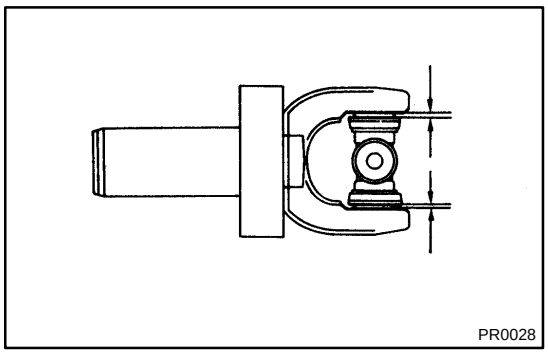
PR0028

(e) Using SST, adjust both bearings so that the snap ring grooves are at maximum and equal widths.

TMC made:

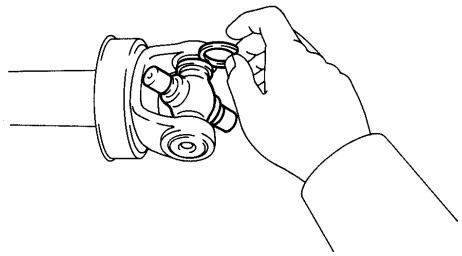
R04425

7. INSTALL SNAP RING

(a) Install 2 new snap rings of equal thickness which will allow 0 – 0.05 mm (0 – 0.0020 in.) axial play.

HINT:

Do not reuse the snap rings.

TMC made:

Color	Mark	Thickness mm (in.)
–	1	2.100 – 2.150 (0.0827 – 0.0846)
–	2	2.150 – 2.200 (0.0846 – 0.0866)
–	3	2.200 – 2.250 (0.0866 – 0.0886)
Brown	–	2.250 – 2.300 (0.0886 – 0.0906)
Blue	–	2.300 – 2.350 (0.0906 – 0.0925)
–	6	2.350 – 2.400 (0.0925 – 0.0945)
–	7	2.400 – 2.450 (0.0945 – 0.0965)
–	8	2.450 – 2.500 (0.0965 – 0.0984)

DANA made:

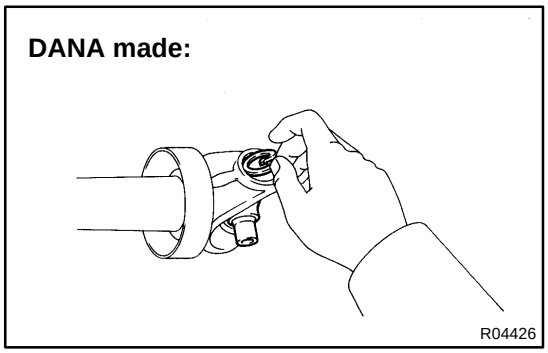
R04426

DANA made:

Color	Thickness mm (in.)
Green	1.384 (0.0545)
Red	1.435 (0.0565)
Black	1.486 (0.0585)
Copper	1.511 (0.0595)
Silver	1.537 (0.0605)
Yellow	1.588 (0.0625)
Blue	1.638 (0.0645)

(b) Using a hammer, tap the yoke until there is no clearance between the bearing outer race and snap ring.

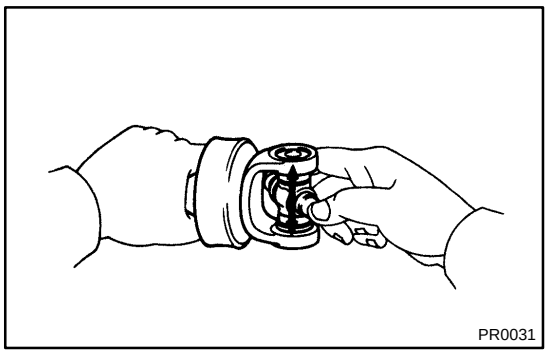

8. CHECK SPIDER BEARING

(a) Check that the spider bearing moves smoothly.

(b) Check the spider bearing axial play.

Maximum bearing axial play: 0.05 mm (0.0020 in.)

HINT:

- Install new spider bearings on the shaft side in the procedure described above.
- When replacing the propeller shaft spider on pre runner and rear propeller shaft spider on 4WD vehicles, be sure that the grease fitting assembly hole is facing in the direction shown in the illustration on the next page.

SPIDER GREASE FITTING ASSEMBLY DIRECTION FOR 4WD FRONT PROPELLER SHAFT

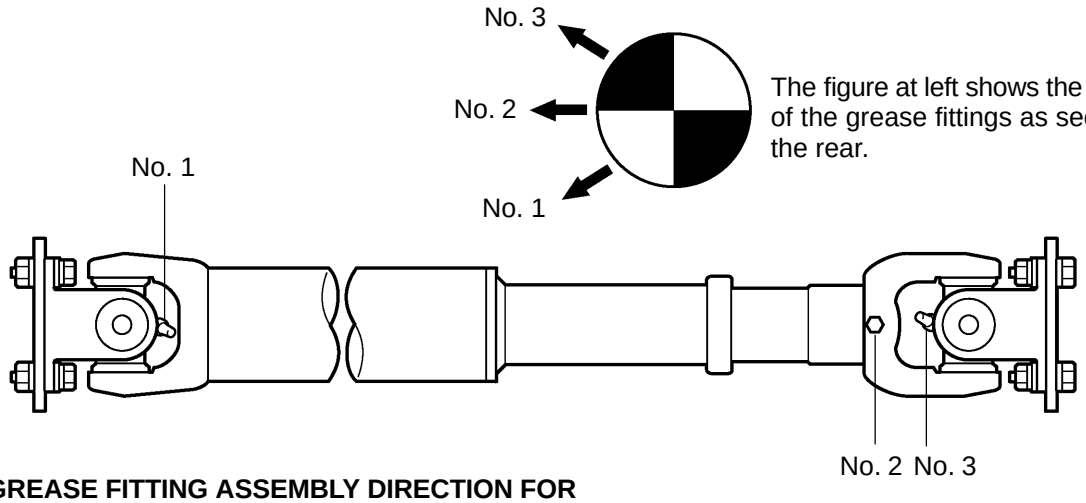

The figure at left shows the locations of the grease fittings as seen from the rear.

SPIDER GREASE FITTING ASSEMBLY DIRECTION FOR PRE RUNNER PROPELLER SHAFT AND 4WD REAR PROPELLER SHAFT
2–joint type:

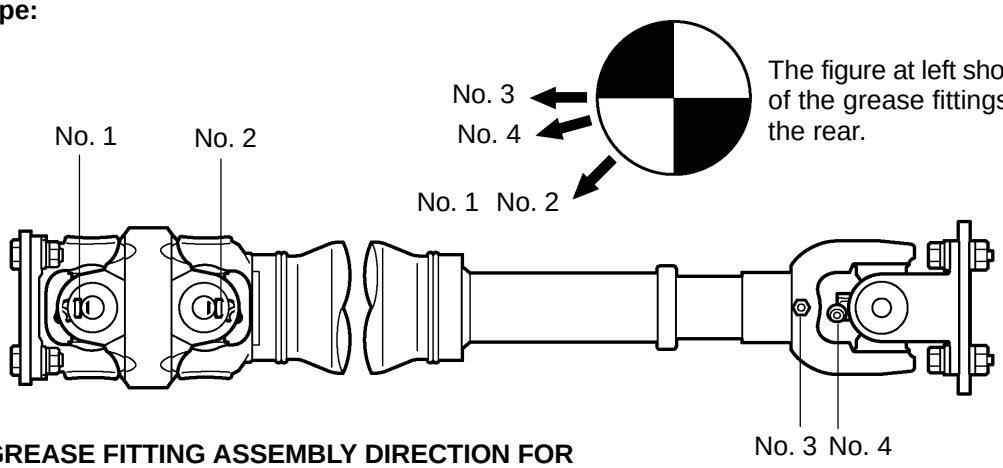

The figure at left shows the locations of the grease fittings as seen from the rear.

SPIDER GREASE FITTING ASSEMBLY DIRECTION FOR PRE RUNNER PROPELLER SHAFT AND 4WD REAR PROPELLER SHAFT
3–joint type:

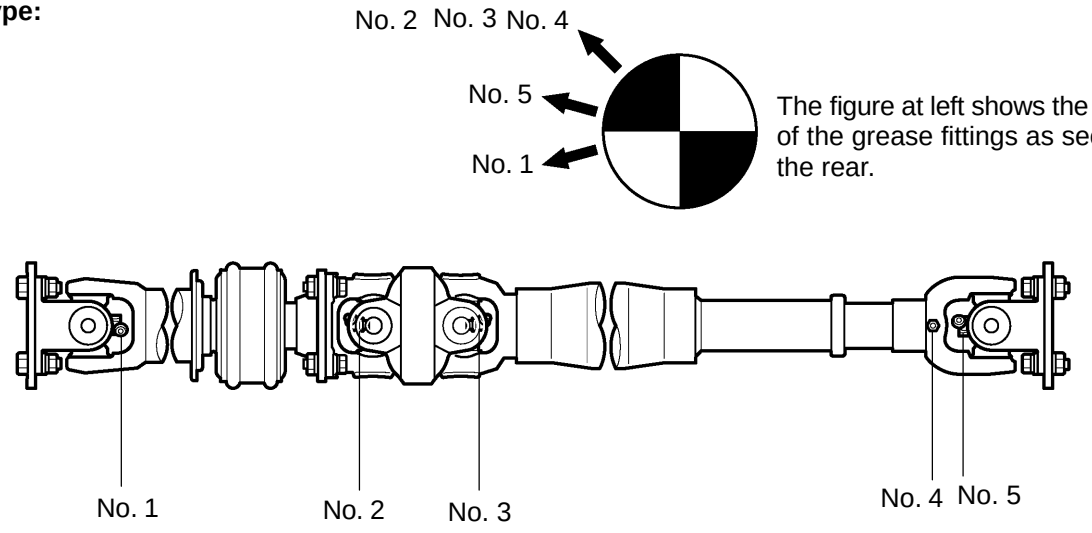

The figure at left shows the locations of the grease fittings as seen from the rear.

T

F14675

TROUBLESHOOTING

PR00O–02

PROBLEM SYMPTOMS TABLE

Use the table below to help you find the cause of the problem. The numbers indicate the priority of the likely cause of the problem. Check each part in order. If necessary, replace these parts.

Symptom	Suspect Area	See page
Noise	1. Center bearing (Worn)	PR–5 PR–13
	2. Sleeve yoke spline (Worn)	–
	3. Spider bearing (Worn or Stuck)	PR–5 PR–13
Vibration	1. Transmission extension housing rear bushing (Worn)	–
	2. Sleeve yoke spline (Stuck)	–
	3. Propeller shaft (Runout)	PR–5 PR–13
	4. Propeller shaft (Imbalance)	–

AIRBAG SENSOR ASSEMBLY

COMPONENTS

RS02F–04

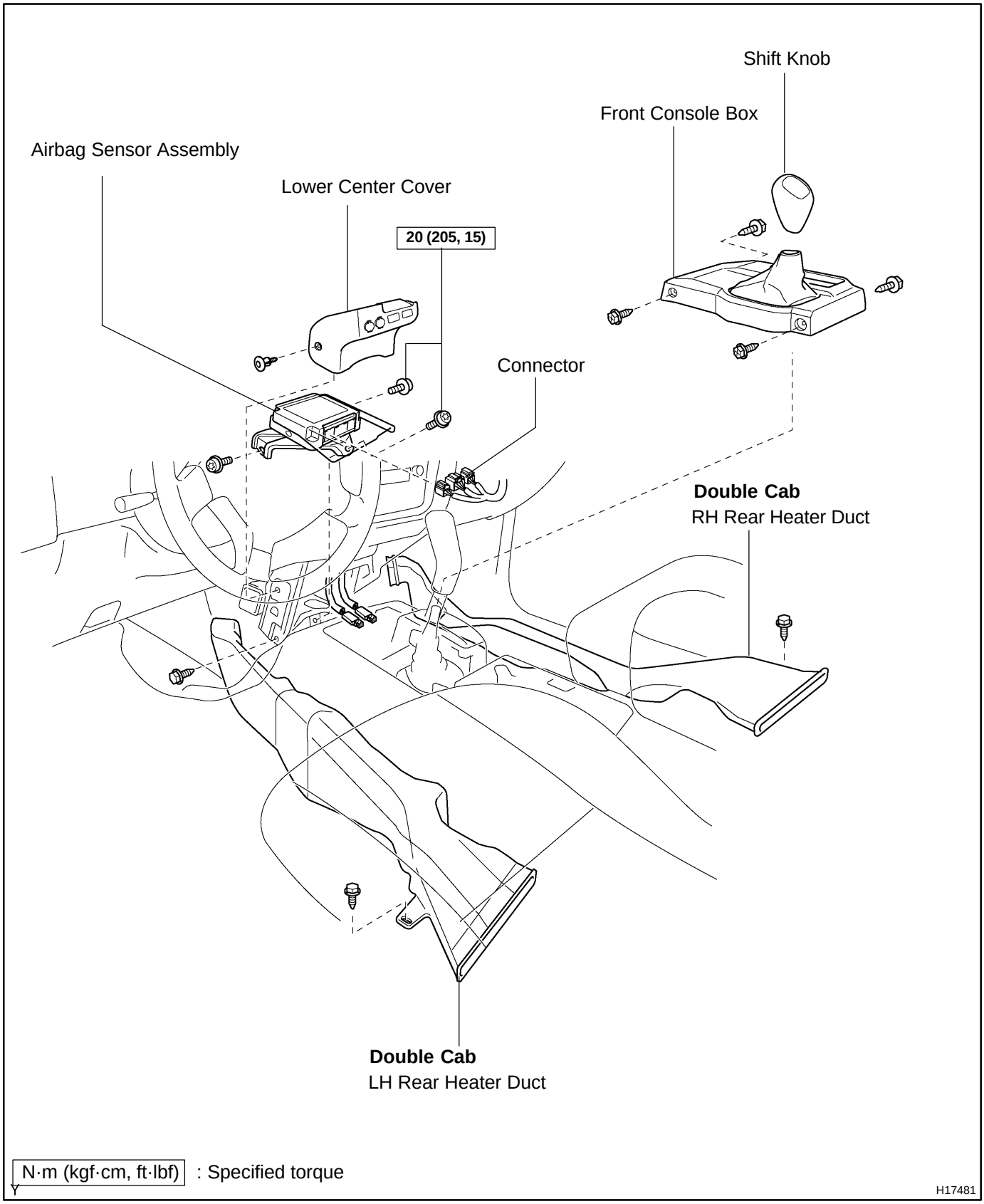

RS02H–04

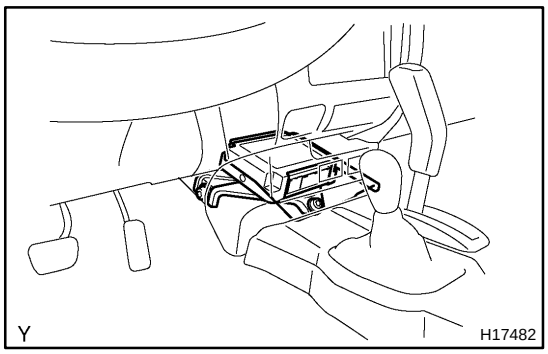

INSPECTION

1. VEHICLES NOT INVOLVED IN COLLISION

Do a diagnostic system check. (See page DI–588)

2. VEHICLES INVOLVED IN COLLISION AND SRS IS NOT DEPLOYED

Do a diagnostic system check. (See page DI–588)

3. VEHICLES INVOLVED IN COLLISION AND SRS IS DEPLOYED

Replace the airbag sensor assembly.

RS02I–05

INSTALLATION

NOTICE:

- **Never use SRS parts from another vehicle. When replacing parts, replace with new parts.**
- **Never reuse the airbag sensor assembly involved in a collision when the airbag has deployed.**
- **Never repair a sensor in order to reuse it.**

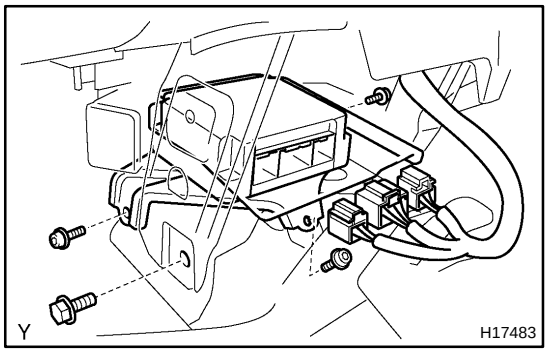

1. INSTALL AIRBAG SENSOR ASSEMBLY

(a) Using a torx wrench, install the airbag sensor assembly with the 3 screws.

Torx wrench: T40 (Part No.09042–00020 or locally manufactured tool)

Torque: 20 N·m (205 kgf·cm, 15 ft·lbf)

(b) Remove the bolt holding the No. 1 brace to the floor.

(c) Connect the 3 connectors.

NOTICE:

- **Installation of the connector is done after the sensor assembly has been installed.**
- **Make sure the sensor assembly is installed to the specified torque.**
- **If the sensor assembly has been dropped, or there are cracks, dents or other defects in the case, bracket or connector, replace the sensor assembly with a new one.**
- **When installing the airbag sensor assembly, take care that the SRS wiring does not interfere with other parts and is not pinched between other parts.**
- **After installation, shake the sensor assembly to check that there is no looseness.**

2. INSTALL REMOVED PARTS (See page RS–37)

RS02G–05

REMOVAL

NOTICE:

Do not open the cover or the case of the ECU and various electrical devices unless absolutely necessary.

If the IC terminals are touched, the IC may be destroyed by static electricity.

1. REMOVE FRONT CONSOLE BOX

2. REMOVE LOWER CENTER COVER

3. Double cab:
DISCONNECT REAR HEATER DUCTS

Remove the 2 bolts and disconnect the LH and RH rear heater ducts.

4. REMOVE AIRBAG SENSOR ASSEMBLY

(a) Disconnect the 3 connectors.

NOTICE:

Remove the connector with the sensor assembly installed.

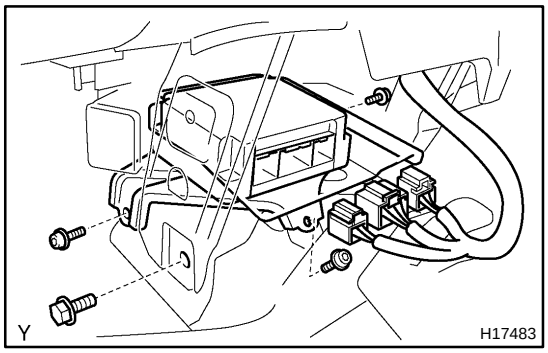

(b) Remove the bolt holding the No. 1 brace to the floor.

(c) Using a torx wrench, remove the 3 screws and airbag sensor assembly.
Torx wrench: T40 (Part No.09042–00020 or locally manufactured tool)

RS01J–14

REPLACEMENT

REPLACEMENT REQUIREMENT

In the following cases, replace the airbag sensor assembly.

- If the SRS has been deployed in a collision.
- If the airbag sensor assembly has been found to be faulty in troubleshooting.
- If the airbag sensor assembly has been dropped.

CAUTION:

For removal and installation of the airbag sensor assembly, see page RS–37 and RS–40, and be sure to follow the correct procedure.

FRONT AIRBAG SENSOR

RS01L–31

COMPONENTS

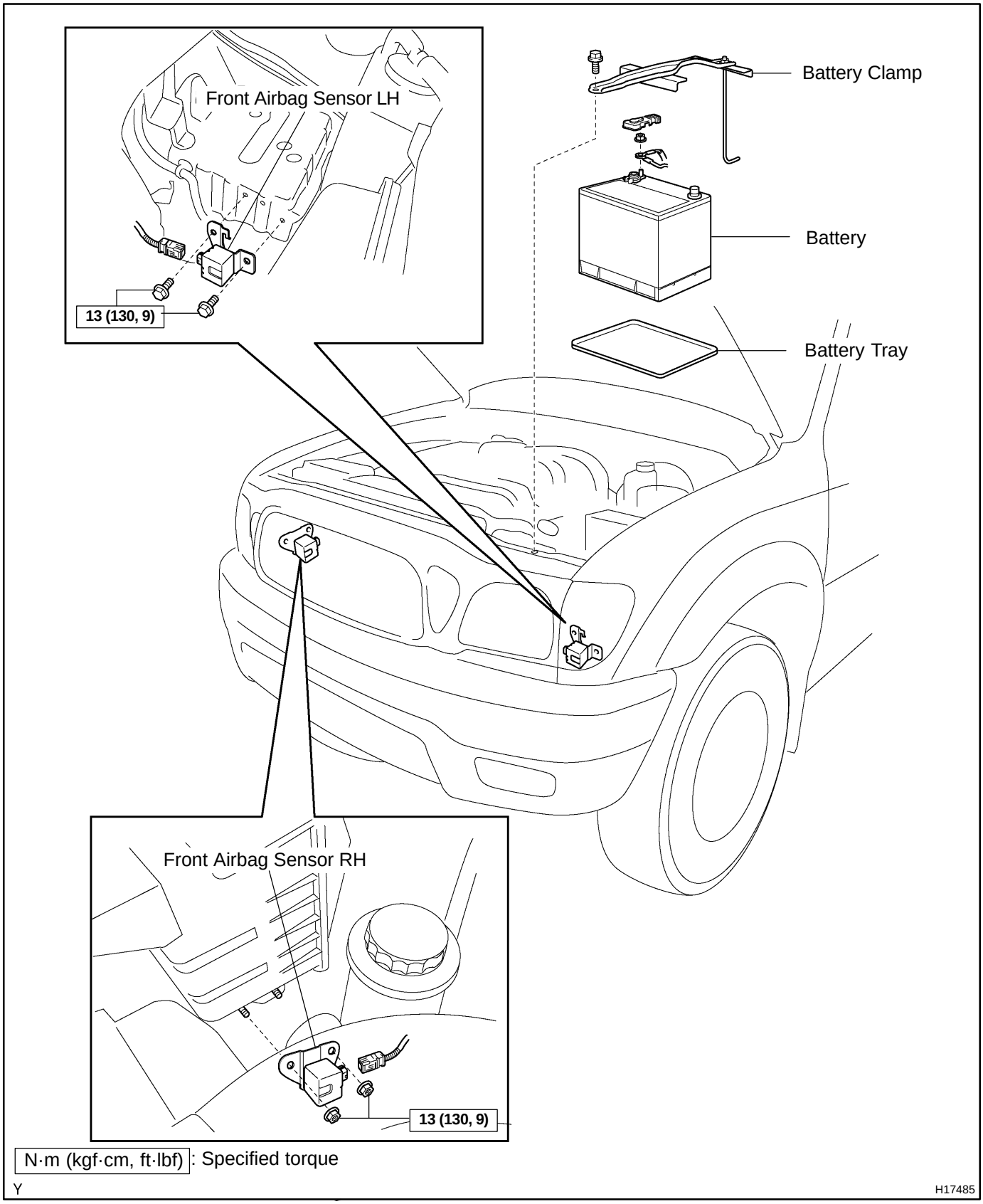

N·m (kgf·cm, ft·lbf): Specified torque

Y

H17485

RS01N–32

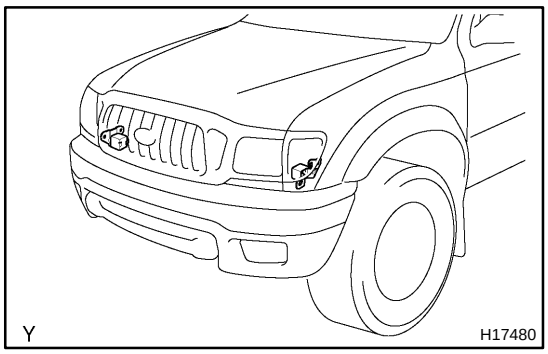

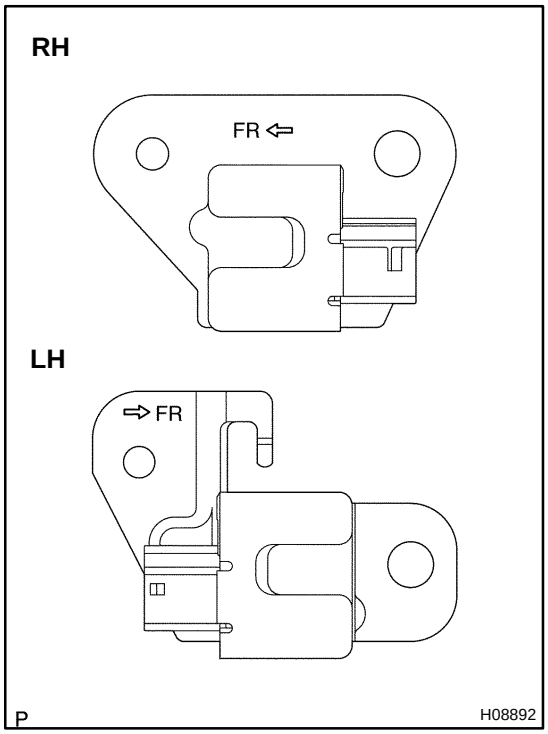

INSPECTION

1. VEHICLES NOT INVOLVED IN COLLISION

Do a diagnostic system check.
(See page DI–588)

2. VEHICLES INVOLVED IN COLLISION

(a) Do a diagnostic system check (See page DI–588).

(b) If the front fender of the car or its periphery is damaged, do a visual check for damage to the front airbag sensor, which includes the following items even if the airbag was not deployed:

- Bracket deformation
- Paint peeling off the bracket
- Cracks, dents or chips in the case
- Cracks, dents, chipping and scratches in the connector
- Peeling off of the label or damage to the serial number

RS01P–23

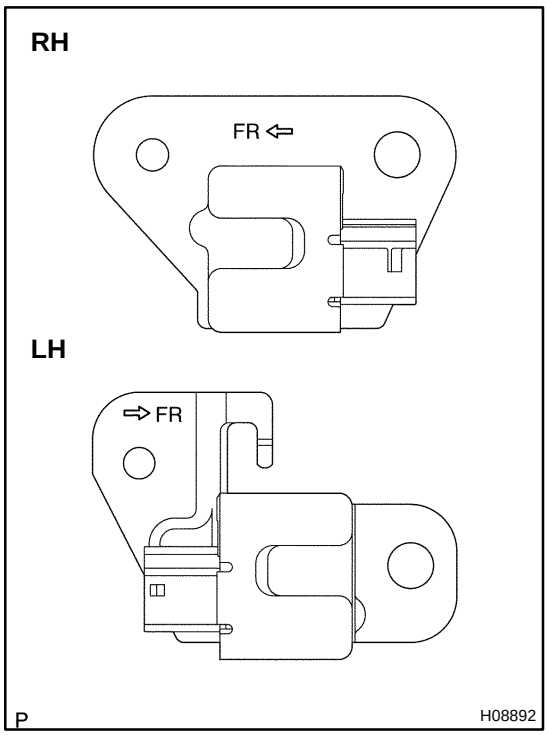

INSTALLATION

1. INSTALL FRONT AIRBAG SENSOR LH AND RH

(a) Install the front airbag sensor with the 2 bolts and 2 nuts with the arrows on the sensors facing toward the front of the vehicle.

Torque: 20 N·m (205 kgf·cm, 15 ft·lbf)

NOTICE:

- **Connection of the connector is done after the sensor has been installed.**
- **Make sure the sensor is installed with the specified torque.**
- **If the sensor has been dropped, or there are cracks, dents or other defects in the case, brackets or connector, replace the removed sensor with new one.**
- **The front sensor is equipped with an electrical connection check mechanism. Be sure to lock this mechanism securely when connecting the connector. If the connector is not securely locked, a malfunction code will be detected by the diagnostic system.**

(b) Connect the front airbag sensor connectors.

2. INSTALL BATTERY

(a) Install the battery carrier and battery.

(b) Install the battery clamp with the bolt.

RS0FV–02

REMOVAL

NOTICE:

- **If the wiring connector of the SRS is disconnected with the ignition switch at ON or ACC position, DTCs will be recorded.**
- **Never use SRS parts from another vehicle. When replacing parts, replace then with new parts.**
- **Never reuse the sensor involved in a collision when the SRS has deployed.**
- **Never repair a sensor in order to reuse it.**

1. REMOVE BATTERY

(a) Remove the bolt and battery clamp.

(b) Remove the battery and battery carrier.

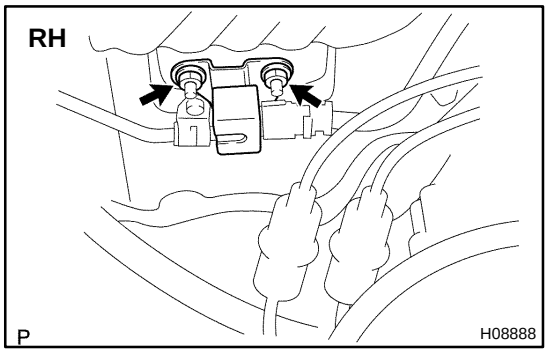

2. REMOVE FRONT AIRBAG SENSOR RH

(a) Disconnect the front airbag sensor connector.

NOTICE:

Disconnect the connector with the front airbag sensor installed.

(b) Remove the 2 nuts and front airbag sensor RH.

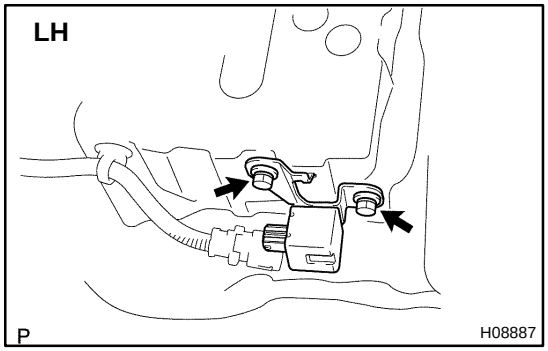

3. REMOVE FRONT AIRBAG SENSOR LH

(a) Disconnect the front airbag sensor connector.

NOTICE:

Disconnect the connector with the front airbag sensor installed.

(b) Remove the 2 bolts and front airbag sensor LH.

RS01O–10

REPLACEMENT

REPLACEMENT REQUIREMENTS

In the following cases, replace the front airbag sensor.

- If the SRS has been deployed in a collision. (Replace both the left and right airbag sensors.)
- If the front airbag sensor has been found to be faulty in troubleshooting.
- If the front airbag sensor has been found to be faulty during checking items.
  (See page RS–43)
- If the front airbag sensor has been dropped.

CAUTION:

For removal and installation of the front airbag sensor, see page RS–42 and RS–45. Be sure to follow the correct procedure.

FRONT PASSENGER AIRBAG ASSEMBLY

RS029–03

COMPONENTS

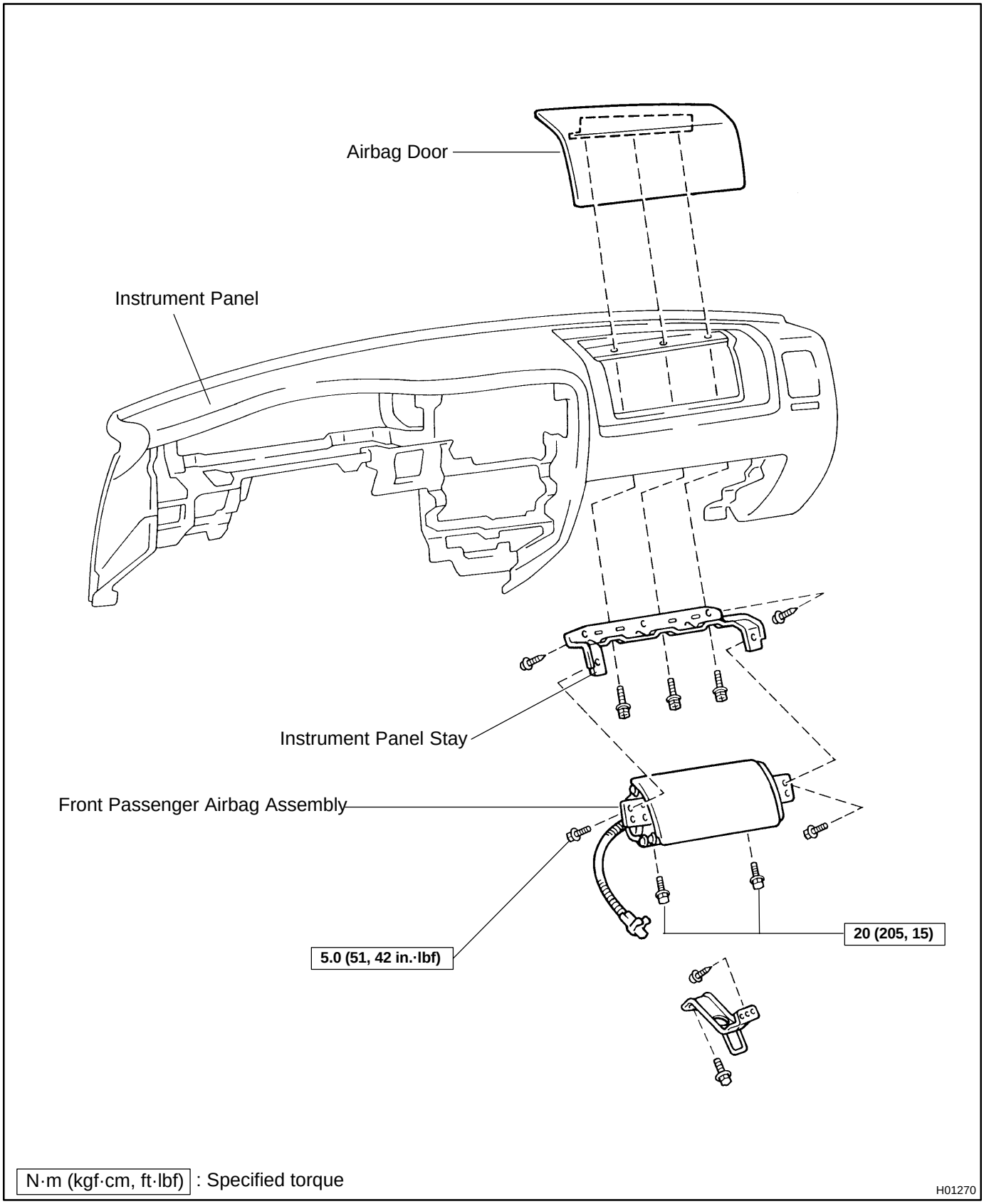

N·m (kgf·cm, ft·lbf) : Specified torque

H01270

RS0SO–01

DISPOSAL

HINT:

When scrapping vehicle equipped with an SRS or disposing of a front passenger airbag assembly, always first deploy the airbag in accordance with the procedure described below. If any abnormality occurs with the airbag deployment, contact the SERVICE DEPT. of TOYOTA MOTOR SALES, U.S.A., INC.

When disposing of a front passenger airbag assembly with an airbag deployed in a collision, follow the same procedure given in step 1–(e) in ”DISPOSAL”.

CAUTION:

- **Never dispose of a front passenger airbag assembly which has an undeployed airbag.**
- **The airbag produces a sizeable exploding sound when it deploys, so perform the operation out–of–doors and where it will not create a nuisance to nearby residents.**

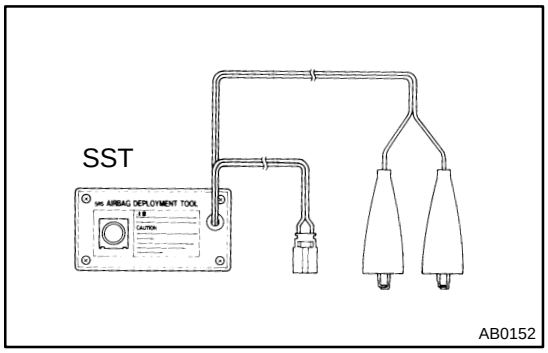

- **When deploying the airbag, always use the specified SST (SRS Airbag Deployment Tool). Perform the operation in a place away from electrical noise.**
  SST 09082–00700
- **When deploying an airbag, perform the operation at least 10 m (33 ft) away from the front passenger airbag assembly.**
- **The front passenger airbag assembly is very hot when the airbag is deployed, so leave it alone for at least 30 minutes after deployment.**
- **Use gloves and safety glasses when handling a front passenger airbag assembly with deployed airbag.**
- **Always wash your hands with water after completing the operation.**
- **Do not apply water, etc. to a front passenger airbag assembly with deployed airbag.**

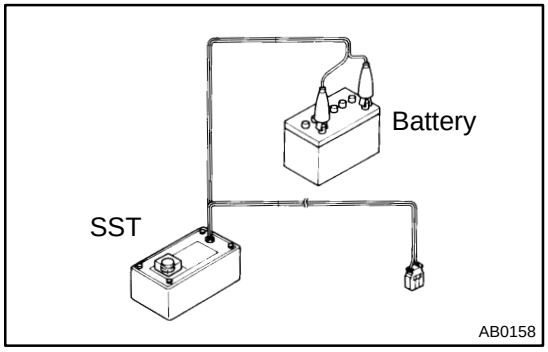

1. AIRBAG DEPLOYMENT WHEN SCRAPPING VEHICLE

HINT:

Have a battery ready as the power source to deploy the airbag.

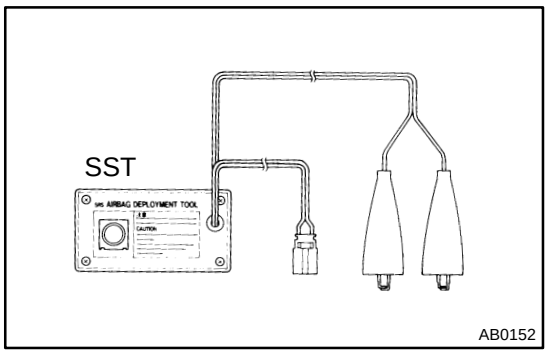

(a) Confirm functioning of the SST.

CAUTION:

When deploying the airbag, always use the specified SST: SRS Airbag Deployment Tool.

SST 09082–00700

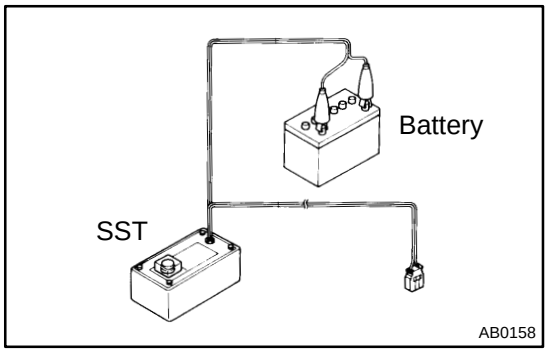

(1) Connect the SST to the battery.
Connect the red clip of the SST to the battery positive (+) terminal and the black clip to the battery negative (–) terminal.

HINT:

Do not connect the yellow connector which will be connected with the supplemental restraint system.

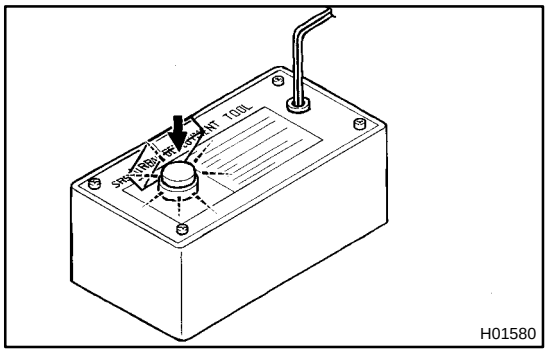

(2) Confirm functioning of the SST.
Press the SST activation switch, and confirm the LED of the SST activation switch lights up.

CAUTION:

If the LED lights up when the activation switch is not being pressed, SST malfunction is probable, so definitely do not use the SST.

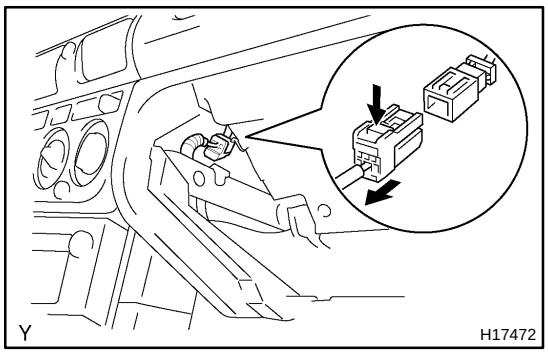

(b) Disconnect the airbag connector.
(1) Remove the glove compartment door.
(2) Disconnect the airbag connector.

NOTICE:

When handling the airbag connector, take care not to damage the airbag wire harness.

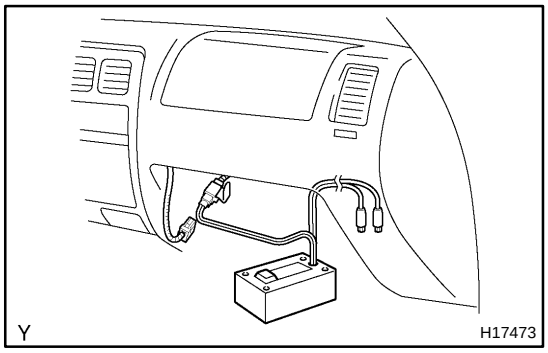

(c) Install the SST.
(1) Connect the SST connector to the front passenger airbag assembly connector.

SST 09082–00700, 09082–00760

NOTICE:

To avoid damaging the SST connector and wire harness, do not lock the secondary lock of the twin lock.

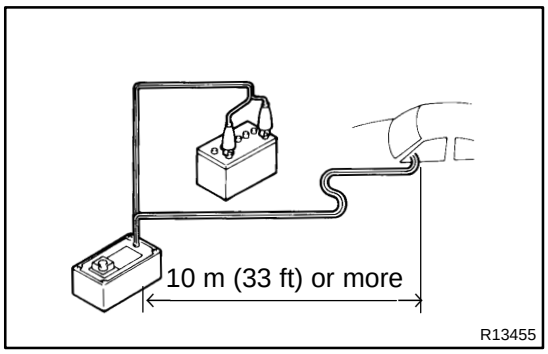

(2) Move the SST to at least 10 m (33 ft) from the front of the vehicle.
(3) Close all the doors and windows of the vehicle.

NOTICE:

Take care not to damage the SST wire harness.

(4) Connect the SST red clip to the battery positive (+) terminal and the black clip to the negative (–) terminal.

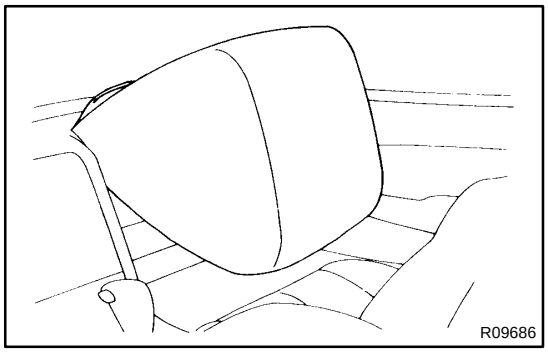

(d) Deploy the airbag.
(1) Confirm that no–one is inside the vehicle or within 10 m (33 ft) area around the vehicle.
(2) Press the SST activation switch and deploy the airbag.

HINT:

The airbag deploys simultaneously as the LED of the SST activation switch lights up.

(e) Dispose of the front passenger airbag assembly.

CAUTION:

- **The front passenger airbag assembly is very hot when the airbag is deployed, so leave it alone for at least 30 minutes after deployment.**
- **Use gloves and safety glasses when handling a front passenger airbag assembly with deployed airbag.**
- **Always wash your hands with water after completing the operation.**
- **Do not apply water, etc. to a front passenger airbag assembly with deployed airbag.**

(1) When scrapping a vehicle, deploy the airbag and scrap the vehicle with the front passenger airbag assembly still installed.
(2) When moving a vehicle for scrapping which has a front passenger airbag assembly with deployed airbag, use gloves and safety glasses.

2. DEPLOYMENT WHEN DISPOSING OF FRONT PASSENGER AIRBAG ASSEMBLY ONLY

NOTICE:

- **When disposing of the front passenger airbag assembly only, never use the customer's vehicle to deploy the airbag.**
- **Be sure to follow the procedure given below when deploying the airbag.**

HINT:

Have a battery ready as the power source to deploy the airbag.

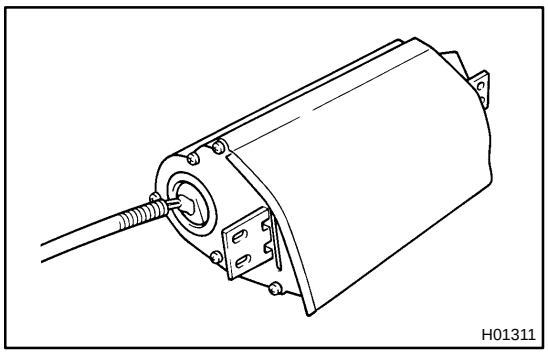

(a) Remove the front passenger airbag assembly (See page RS–25).

CAUTION:

- **When removing the front passenger airbag assembly, work must be started after 90 seconds from the time the ignition switch is turned to the "LOCK" position and the negative (–) terminal cable is disconnected from the battery.**
- **Store the front passenger airbag assembly with the airbag deployment direction facing upward.**

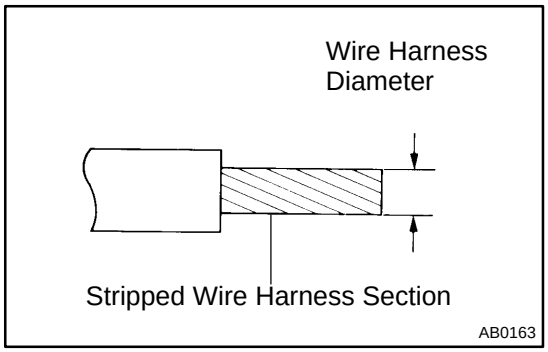

(b) Fix the front passenger airbag assembly to tire.
Using a service–purpose wire harness for the vehicle, tie down the front passenger airbag assembly to the tire.
Wire harness: Stripped wire harness section 1.25 mm^2 or more (0.0019 $in.^2$ or more)

HINT:
To calculate the square of the stripped wire harness section:
Square = 3.14 X $(Diameter)^2$ divided by 4

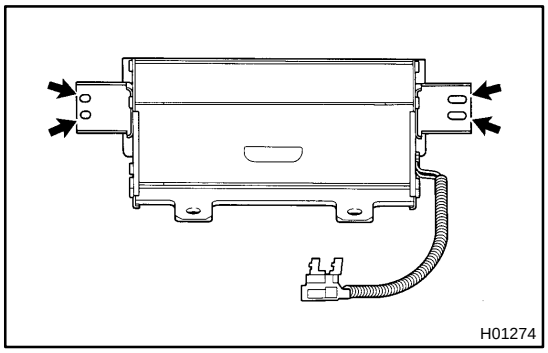

CAUTION:
If the front passenger airbag assembly is tied down with too thin wire harness, it may snap. This is highly dangerous. Always use a wire harness for vehicle use which is at least 1.25 mm^2 (0.0019 $in.^2$).

(1) Wind the wire harness around the tire, passing the wire harness through the installation holes indicated by arrows in the installation.

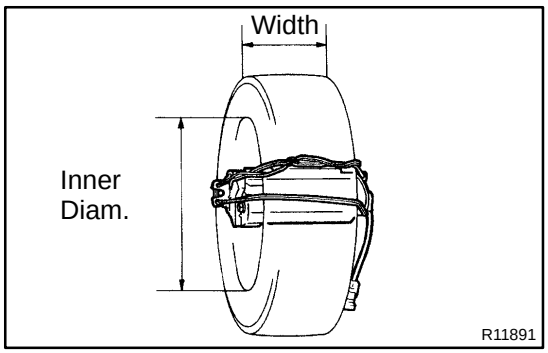

(2) Position the front passenger airbag assembly inside the tire with the airbag deployment direction facing inside.

Tire size: Must exceed the following dimensions–
Width: 185 mm (7.28 in.)
Inner diameter: 360 mm (14.17 in.)

CAUTION:

- **Make sure that the wire harness is tight. It is very dangerous if looseness in the wire harness results in the front passenger airbag assembly coming free due to the shock of the airbag deploying.**
- **Always tie down the front passenger airbag assembly with the airbag door facing inside.**

NOTICE:
The tire will be marked by the airbag deployment, so use a redundant tire.

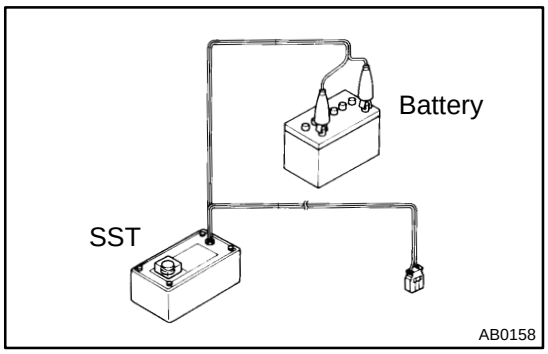

(c) Confirm functioning of the SST.
SST 09082–00700

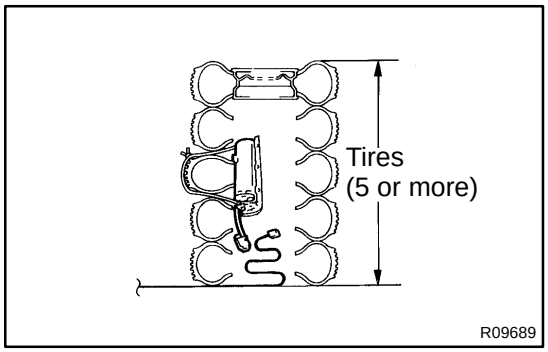

(d) Place tires.
(1) Place at least 2 tires under the tire to which the front passenger airbag assembly is tied.
(2) Place at least 2 tires over the tire to which the front passenger airbag assembly is tied. The top tire should have the wheel installed.

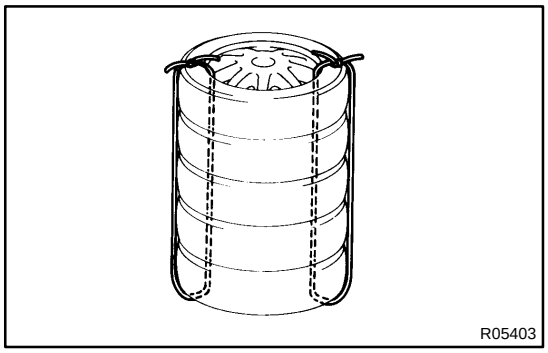

(3) Tie the tires together with 2 wire harnesses.

CAUTION:
Make sure that the wire harnesses are tight. It is very dangerous if loose wire harnesses result in the tires coming free due to the shock of the airbag deploying.

HINT:
Place the SST connector and wire harness inside tires. Provide at least 1 m (3 ft) of slack for the wire harness.

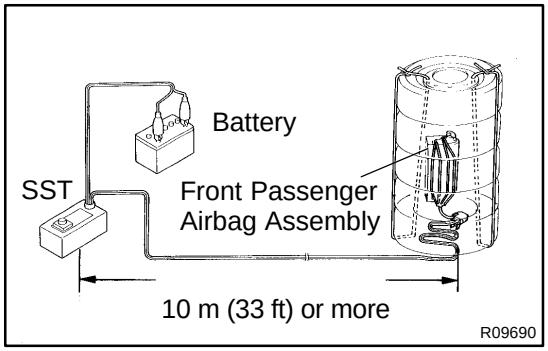

(e) Install the SST.
Connect the SST connector to the front passenger airbag assembly connector.
SST 09082–00700, 09082–00760

NOTICE:
To avoid damaging the SST connector and wire harness, do not lock the secondary lock of the twin lock.

(f) Deploy the airbag.
(1) Connect the SST red clip to the battery positive (+) terminal and the black clip to the battery negative (–) terminal.
(2) Confirm that no–one is within 10 m (33 ft) area around the tire which the front passenger airbag assembly is tied to.
(3) Press the SST activation switch and deploy the airbag.

HINT:
The airbag deploys simultaneously as the LED of the SST activation switch lights up.

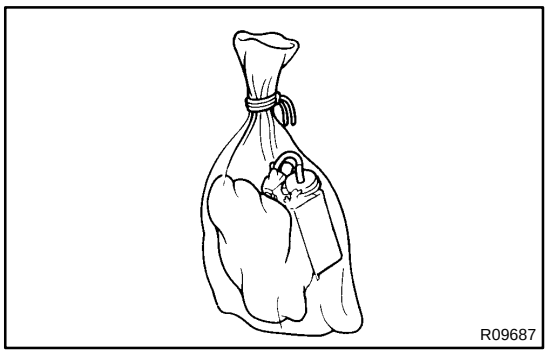

(g) Dispose of the front passenger airbag assembly.

CAUTION:

- **The front passenger airbag assembly is very hot when the airbag is deployed, so leave it alone for at least 30 minutes after deployment.**
- **Use gloves and safety glasses when handling a front passenger airbag assembly with deployed airbag.**
- **Always wash your hands with water after completing the operation.**
- **Do not apply water, etc. to a front passenger airbag assembly with deployed airbag.**

(1) Remove the front passenger airbag assembly from the tire.

(2) Place the front passenger airbag assembly in a vinyl bag, tie the end tightly and dispose of it in the same way as other general parts.

RS02B–04

INSPECTION

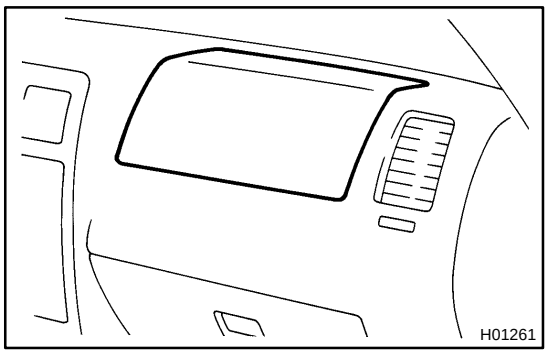

1. VEHICLE NOT INVOLVED IN COLLISION

(a) Do a diagnostic system check (See page DI–588).

(b) Do a visual check which includes the following items with the front passenger airbag assembly installed in the vehicle.

Check for cuts, minute cracks or marked discoloration of the front passenger airbag door.

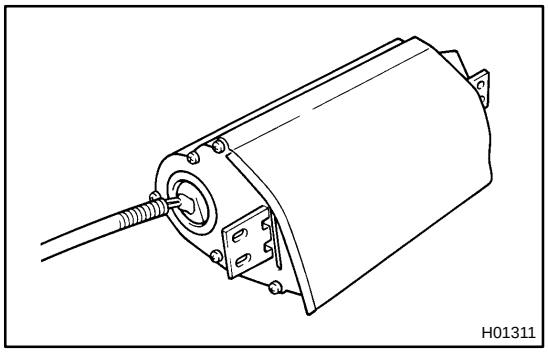

2. VEHICLE INVOLVED IN COLLISION AND AIRBAG IS NOT DEPLOYED

(a) Do a diagnostic system check (See page DI–588).

(b) Do a visual check which includes the following items with the front passenger airbag assembly removed from the vehicle.

- Check for cuts and cracks in, or marked discoloration of the front passenger airbag door.
- Check for cuts and cracks in wire harnesses, and for chipping in connectors.
- Check for deformation of the instrument panel and instrument panel reinforcement.

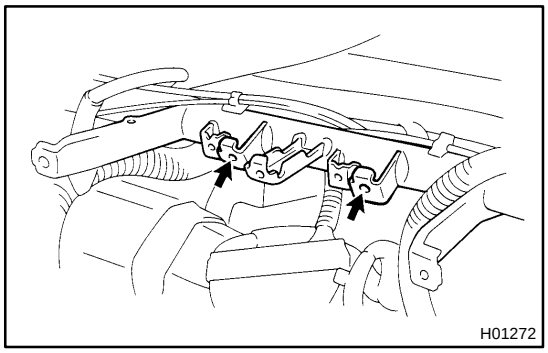

HINT:

- If the instrument panel or instrument panel reinforcement is deformed, never repair it. Always replace it with a new one.

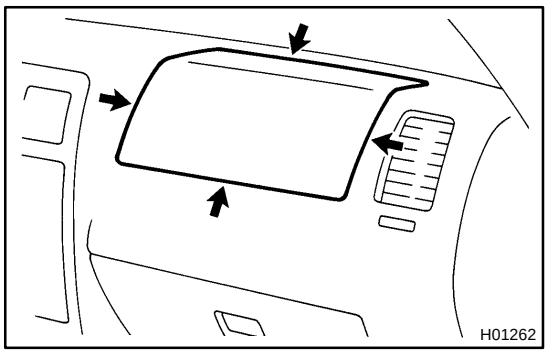

- There should be no interference between the instrument panel and front passenger airbag door, or the glove compartment door and front passenger airbag door. The clearance should be uniform all the way around when the new airbag assembly is installed on the instrument panel.

CAUTION:

For removal and installation of the front passenger airbag assembly, see page RS–25 and RS–35 and be sure to follow the correct procedure.

3. VEHICLE INVOLVED IN COLLISION AND AIRBAG IS DEPLOYED

(a) Do a diagnostic system check.
(See page DI–588)

(b) Do a visual check which includes the following items with the airbag assembly removed from the vehicle.
- Check for deformation of the instrument panel, instrument panel reinforcement and glove compartment door.
- Check for damage to the connector and wire harness.

HINT:
- If the instrument panel or instrument panel reinforcement is deformed, never repair it. Always replace it with a new one.
- There should be no interference between the instrument panel and front passenger airbag door, or the glove compartment and front passenger airbag door. The clearance should be uniform all the way around when the new airbag assembly is installed on the instrument panel.

RS0SP–01

INSTALLATION

NOTICE:

Never use airbag parts from another vehicle. When replacing parts, replace with new parts.

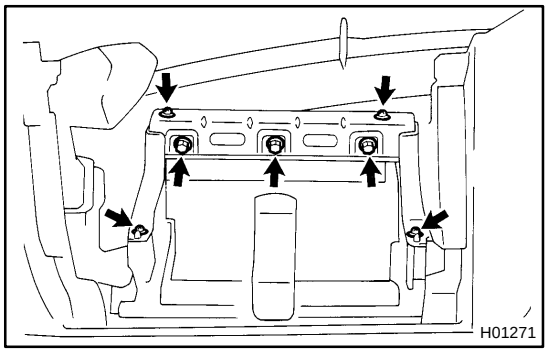

1. INSTALL FRONT PASSENGER AIRBAG ASSEMBLY

(a) Install the airbag door and instrument panel stay to the instrument panel.

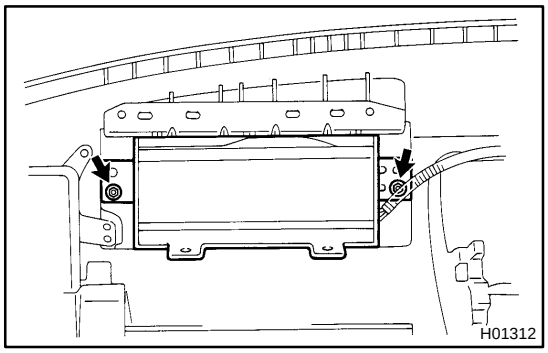

(b) Install the front passenger airbag assembly to the instrument panel.

CAUTION:

Make sure that no foreign objects are trapped between the airbag door and bag, and within the module.

NOTICE:

If the front passenger airbag assembly has been dropped, or there are cracks, dents or other defects in the case or connector, replace the front passenger airbag assembly with a new one.

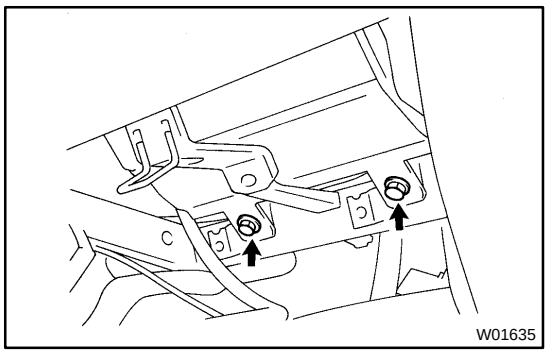

2. INSTALL INSTRUMENT PANEL (See page BO–55)

Install the 2 bolts to instrument panel reinforcement.

Torque: 20 N·m (205 kgf·cm, 15 ft·lbf)

NOTICE:

- **Make sure the front passenger airbag assembly is installed to the specified torque.**
- **When installing the instrument panel, take care that the airbag wire harness does not interfere with other parts and is not pinched between other parts.**

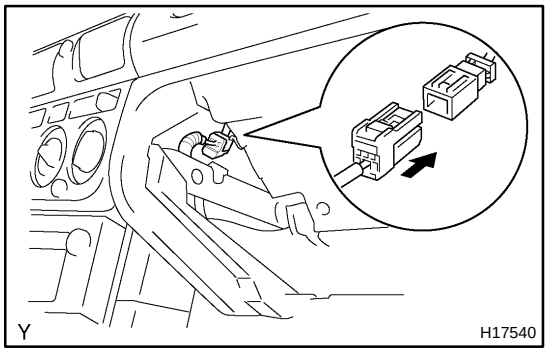

3. CONNECT AIRBAG CONNECTOR

(a) Connect the airbag connector.

(b) Install the instrument finish lower panel.

(c) Install the glove compartment door.

RS0SN–01

REMOVAL

NOTICE:

If the wiring connector of the SRS is disconnected with the ignition switch at ON or ACC, diagnostic trouble codes will be recorded.

1. DISCONNECT AIRBAG CONNECTOR

(a) Remove the glove compartment door.

(b) Remove the instrument finish lower panel.

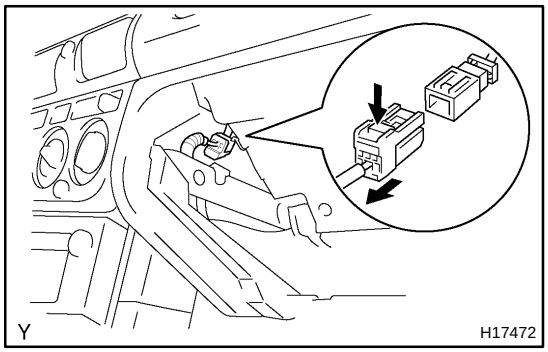

(c) Disconnect the airbag connector.

NOTICE:

When handling the airbag connector, take care not to damage the airbag wire harness.

2. REMOVE INSTRUMENT PANEL (See page BO–52)

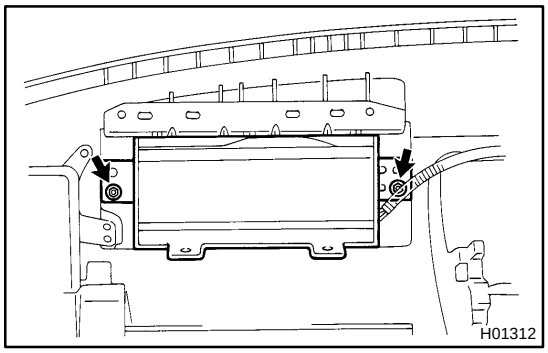

3. REMOVE FRONT PASSENGER AIRBAG ASSEMBLY

(a) Remove the 2 bolts and front passenger airbag assembly.

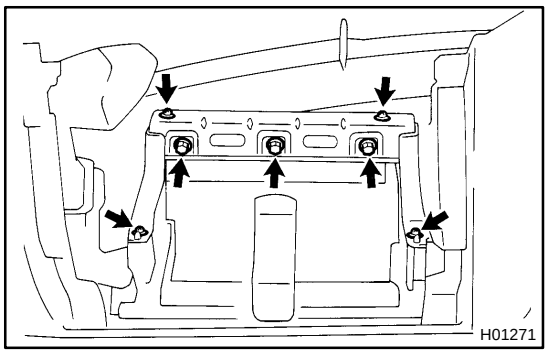

(b) Remove the 3 bolts, 2 screws and the instrument panel stay.

(c) Remove the airbag door.

CAUTION:

- **Do not store the front passenger airbag assembly with the airbag deployment direction facing downward.**
- **Never disassemble the front passenger airbag assembly.**

RS02D–04

REPLACEMENT

REPLACEMENT REQUIREMENTS

In the following cases, replace the front passenger airbag assembly, instrument panel or instrument panel reinforcement.

Case	Replacing part
If the airbag has been deployed.	Front passenger airbag assembly
If the front passenger airbag assembly has been found to be faulty in trouble-shooting.	Front passenger airbag assembly
If the front passenger airbag assembly has been found to be faulty during checking items (See page RS–26).	Front passenger airbag assembly
If the instrument panel has been found to be faulty during checking items (See page RS–26).	Instrument panel
If the instrument panel reinforcement has been found to be faulty during checking items (See page RS–26).	Instrument panel reinforcement
If the front passenger airbag assembly has been dropped.	Front passenger airbag assembly

CAUTION:

For replacement of the front passenger airbag assembly, see page RS–25 and RS–35. Be sure to follow the correct procedure.

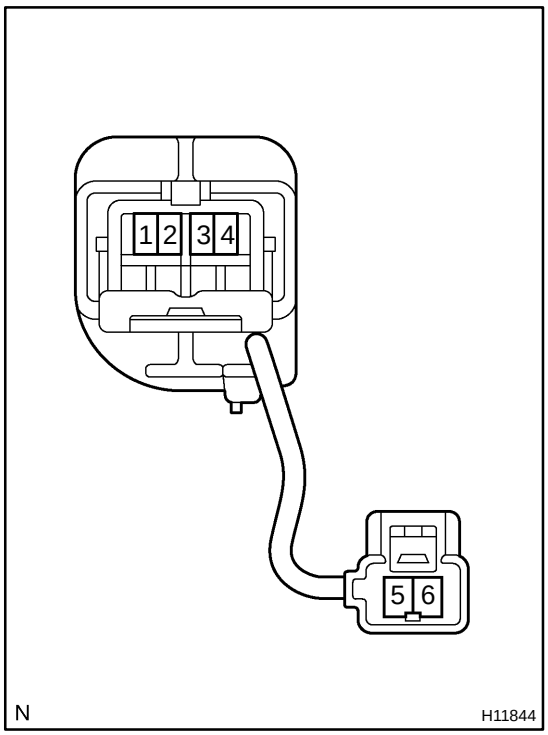

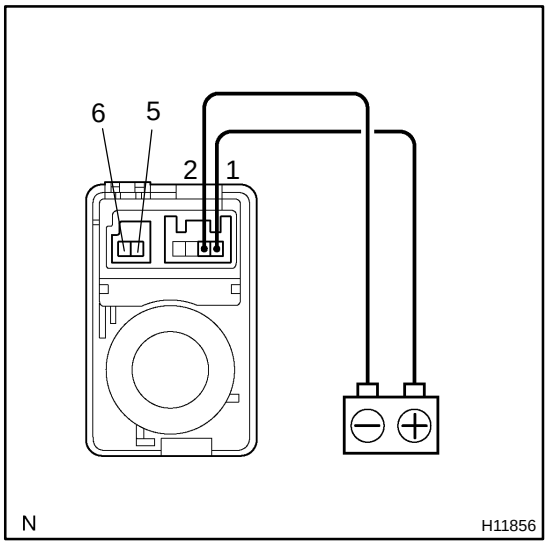

PASSENGER AIRBAG MANUAL ON–OFF SWITCH

RS02J–04

INSPECTION

1. INSPECT PASSENGER AIRBAG MANUAL ON–OFF SWITCH CONTINUITY

HINT:

Release the airbag activention prevention mechanism of the passenger airbag manual on–off switch connector on the air-bag sensor assembly side. (See page DI–588)

Switch position	Tester connection	Specified condition
ON	1 – 3 2 – 4	Continuity
	3 – 4 5 – 6	No continuity
OFF	5 – 6	Continuity
	2 – 4	No continuity
	3 – 4	Resistance 2.1 – 2.7 Ω

If continuity is not as specified, replace the switch.

2. INSPECT PASSENGER AIRBAG MANUAL ON–OFF INDICATOR OPERATION

(a) Check that continuity exists between terminals 5 and 6.

(b) Connect the positive (+) lead from the battery to terminal 1 and negative (–) lead to terminal 2.

(c) Check that the indicator light lights up.

If the operation is not as specified, replace the indicator.

RS0FR–03

OPERATION

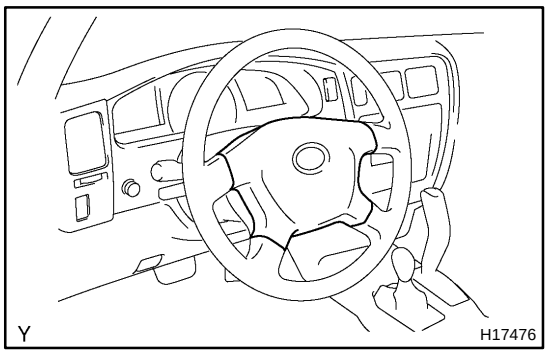

1. STEERING WHEEL PAD (with AIRBAG)

The inflater and bag of the SRS are stored in the steering wheel pad and cannot be disassembled. The inflater contains a squib, igniter charge, gas generant, etc., and inflates the bag when instructed by the airbag sensor assembly.

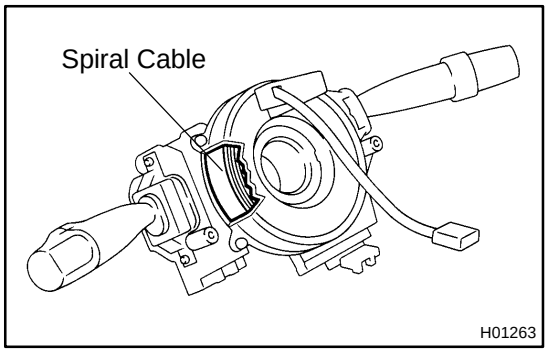

2. SPIRAL CABLE (in COMBINATION SWITCH)

A spiral cable is used as an electrical joint from the vehicle body side to the steering wheel.

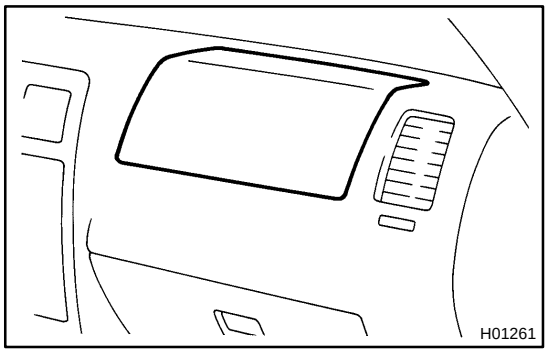

3. FRONT PASSENGER AIRBAG ASSEMBLY

The inflater and bag of the SRS are stored in the front passenger airbag assembly and cannot be disassembled. The inflater contains a squib, igniter charge and gas generant, etc., and inflates the bag when instructed by the airbag sensor assembly.

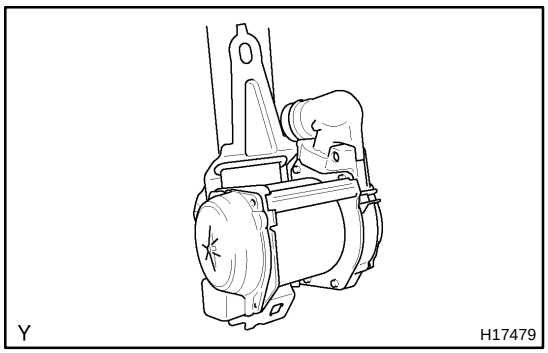

4. SEAT BELT PRETENSIONER

The seat belt pretensioner system is a component of the front seat outer belt. The pretensioner in the event of a frontal collision.

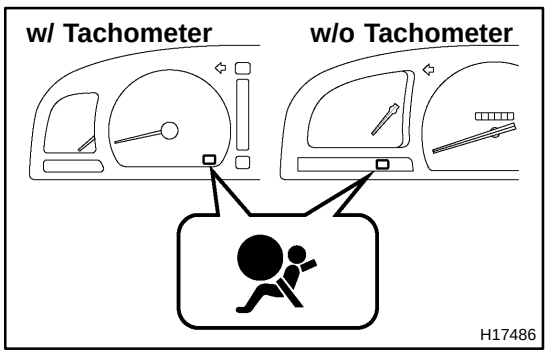

5. SRS WARNING LIGHT

The SRS warning light is located on the combination meter. It goes on to alert the driver of trouble in the system when a malfunction is detected in the airbag sensor assembly self–diagnosis. In normal operating conditions when the ignition switch is turned to the ACC or ON position, the light goes on for about 6 seconds and then goes off.

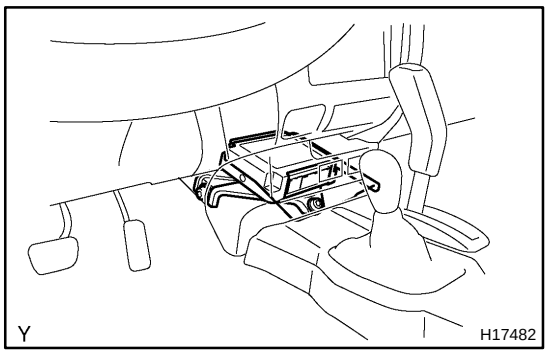

6. AIRBAG SENSOR ASSEMBLY

The airbag sensor assembly is mounted on the floor inside the center cluster. The airbag sensor assembly consists of a airbag sensor, safing sensor, diagnosis circuit, ignition control and drive circuit, etc.

It receives signals from the airbag sensor assembly and judges whether the SRS must be activated or not and diagnosis system malfunctions.

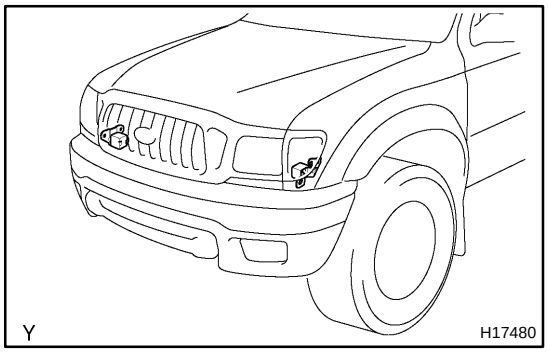

7. FRONT AIRBAG SENSOR

The front airbag sensor is mounted inside each of the aprons. The sensor unit is a mechanical type. When the sensor detects deceleration force above a predetermined limit, contact is made in the sensor, sending a signal to the airbag sensor assembly. The sensor cannot be disassembled.

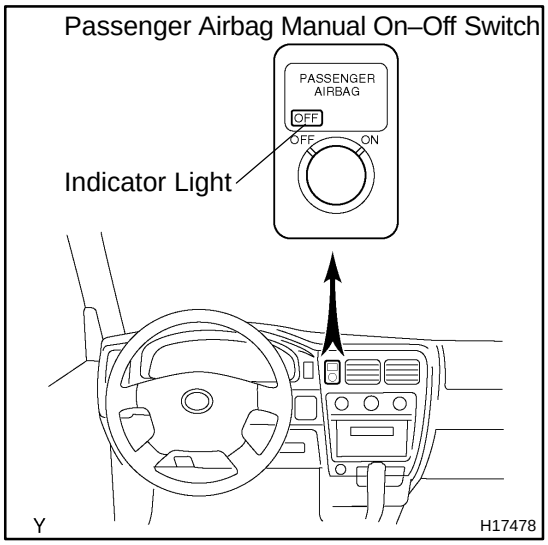

8. PASSENGER AIRBAG MANUAL ON–OFF SWITCH

Passenger airbag manual on–off switch is mounted on the center cluster finish panel. By turning the passenger airbag manual on–off switch to OFF with the ignition key, the passenger airbag system can be disabled. Also, in order to notify the passenger that the passenger airbag is disabled, OFF indicator inside the switch will light up.

Switch Position	Passenger Airbag	Indicator Light
ON	Operative	OFF
OFF	Disabled	ON

9. SRS CONNECTORS

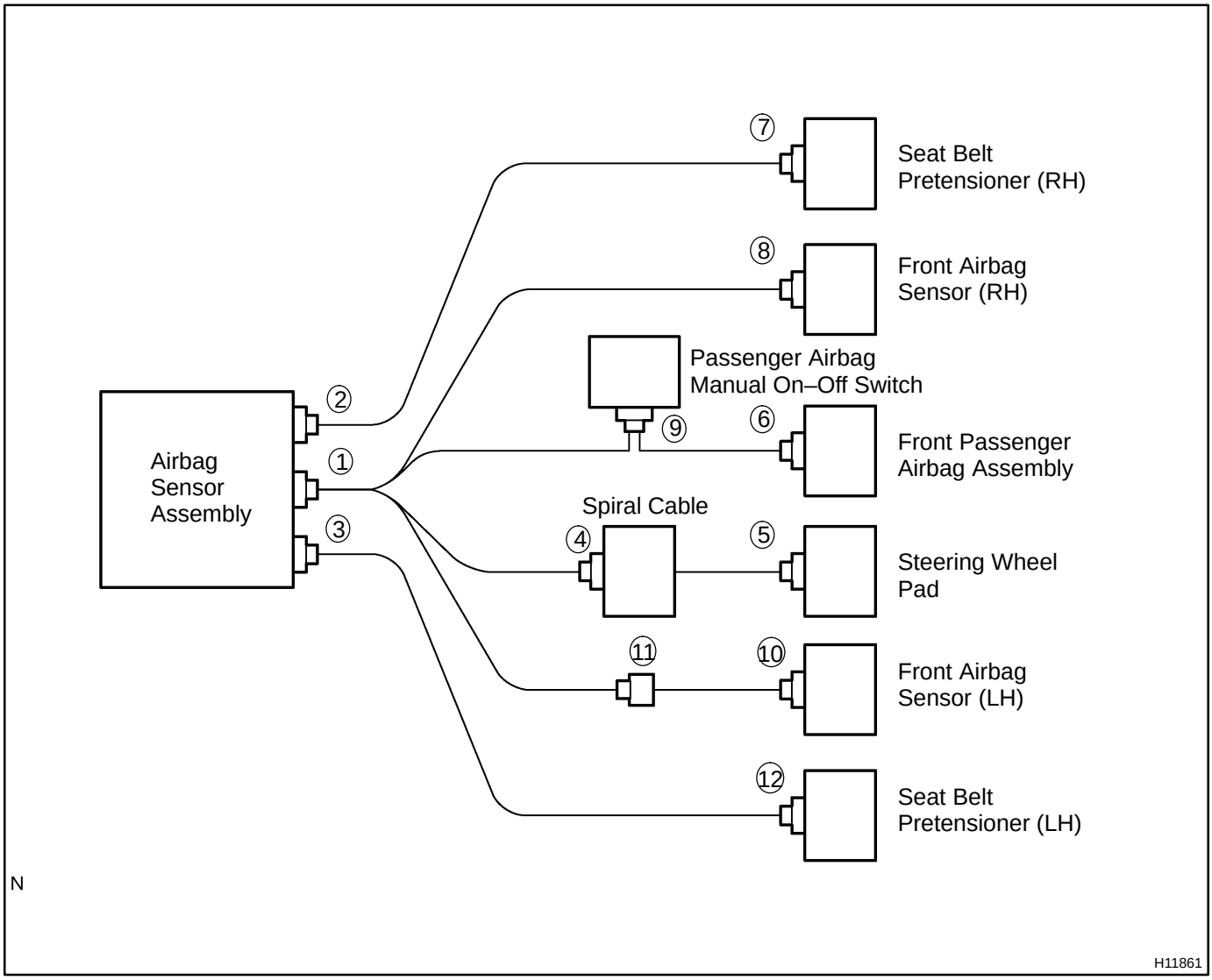

No.	Item	Application
(1)	Terminal Twin–Lock Mechanism	Connectors 1, 2, 3, 4, 5, 6, 8, 9, 10, 11
(2)	Airbag Activation Prevention Mechanism	Connectors 1, 2, 3, 4, 5, 6, 7, 9, 12
(3)	Electrical Connection Check Mechanism	Connectors 1, 2, 3
(4)	Connector Twin–Lock Mechanism	Connectors 4, 9

(a) All connectors in the SRS are colored in yellow to distinguish them from other connectors. Connectors having special functions and specifically designed for SRS are used in the locations shown above to ensure high reliability. These connectors use durable gold–plated terminals.

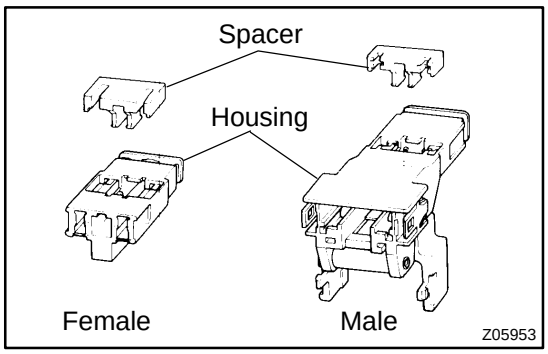

(1) Terminal Twin–Lock Mechanism
Each connector has a two–piece component consisting of a housing and a spacer. This design enables the terminal to be locked securely by two locking devices (the retainer and the lance) to prevent terminals from coming out.

(2) Airbag Activation Prevention Mechanism
Each connector contains a short spring plate. When the connector is disconnected, the short spring plate automatically connects positive (+) terminal and negative (–) terminal of the squib.

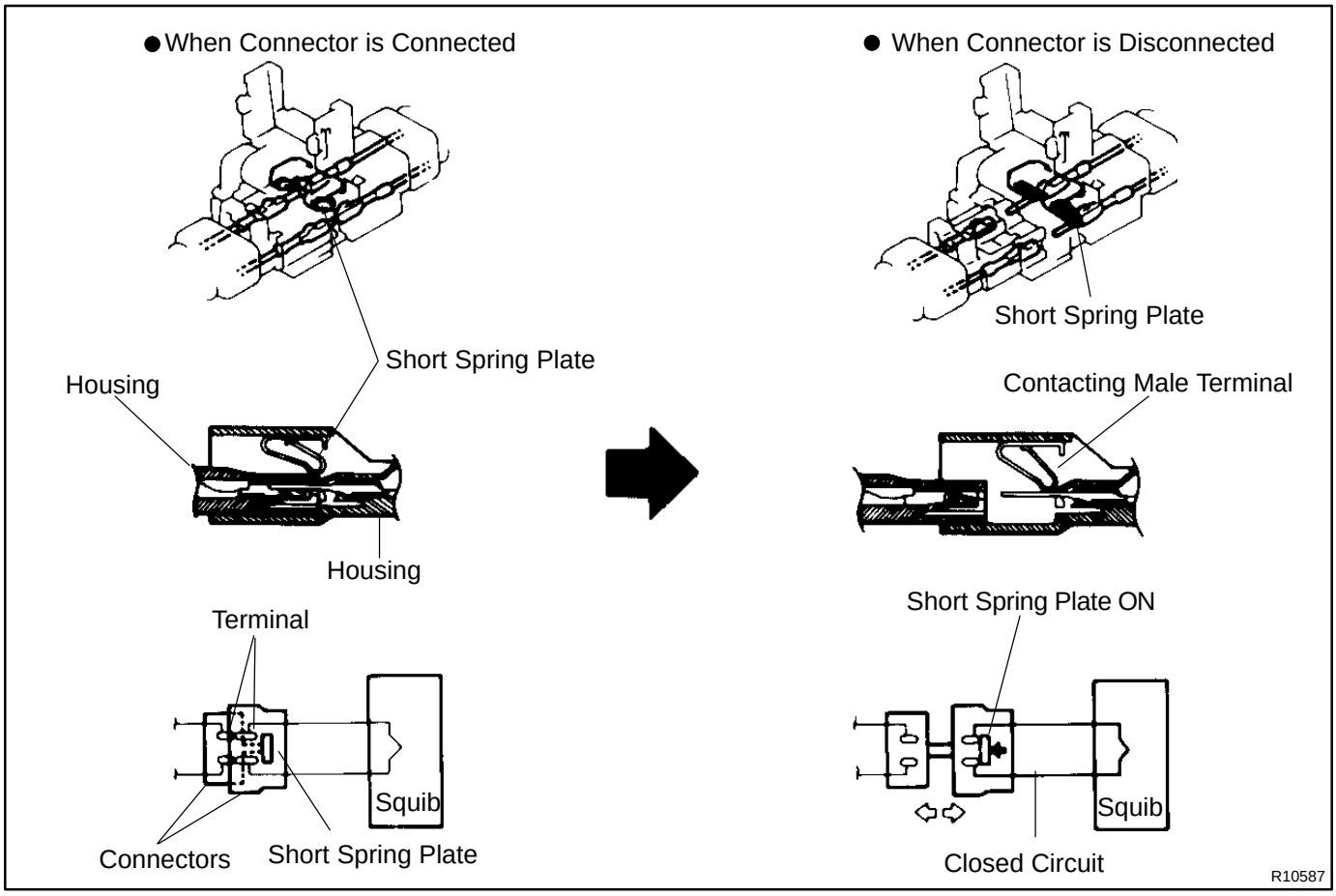

HINT:
The type of connector is shown in the diagram on the previous page.

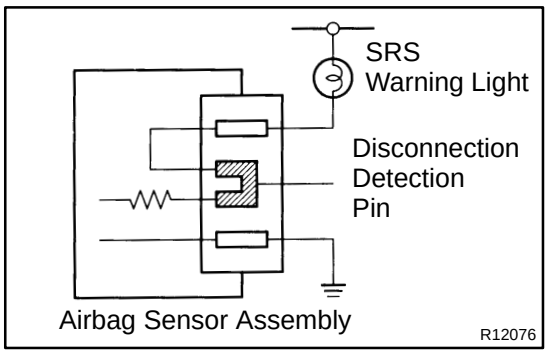

(3) Electrical Connection Check Mechanism:
This mechanism is designed to electrically check if connectors are connected correctly and completely. The electrical connection check mechanism is designed so that the connection detection pin connects with the diagnosis terminals when the connector housing lock is in the locked condition.

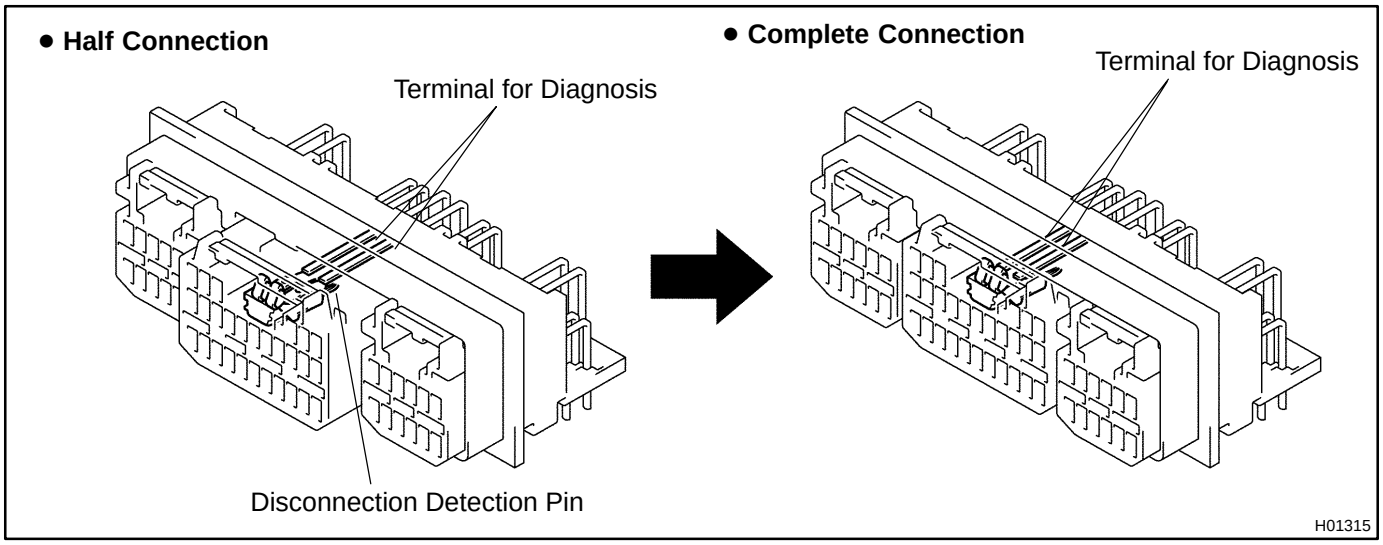

HINT:
The illustration shows connectors ”1”, ”2” and ”3” in step 9.

(4) Connector Twin–Lock Mechanism:
With this mechanism connectors (male and female connectors) are locked by two locking devices to increase connection reliability.

If the primary lock is incomplete, ribs interfere and prevent the secondary lock.

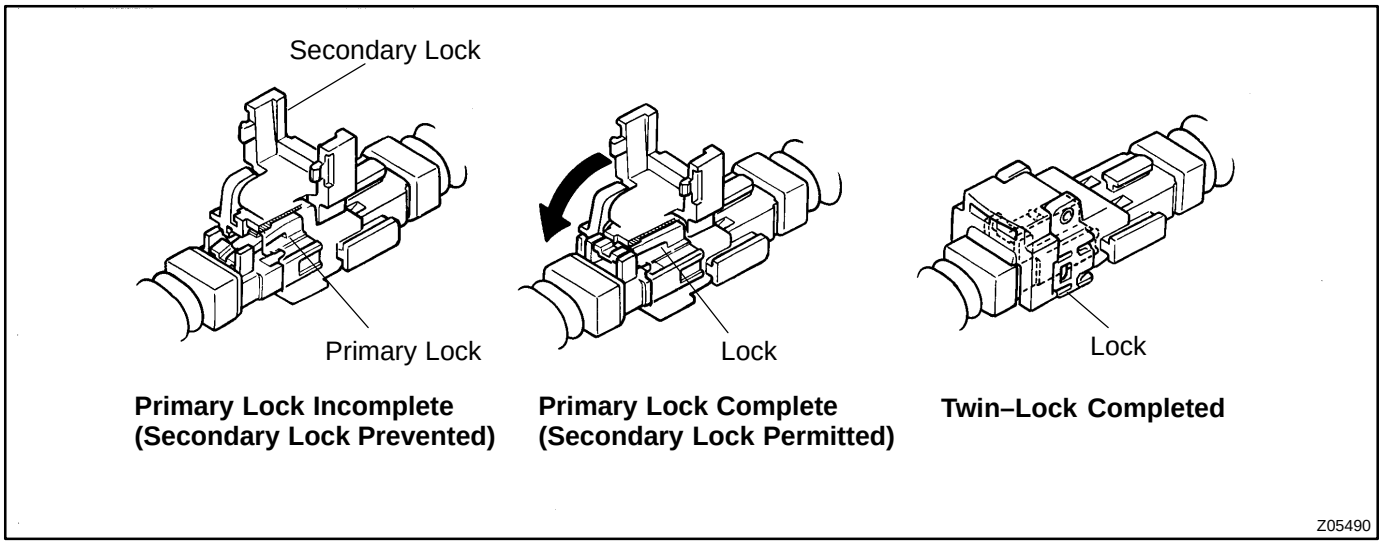

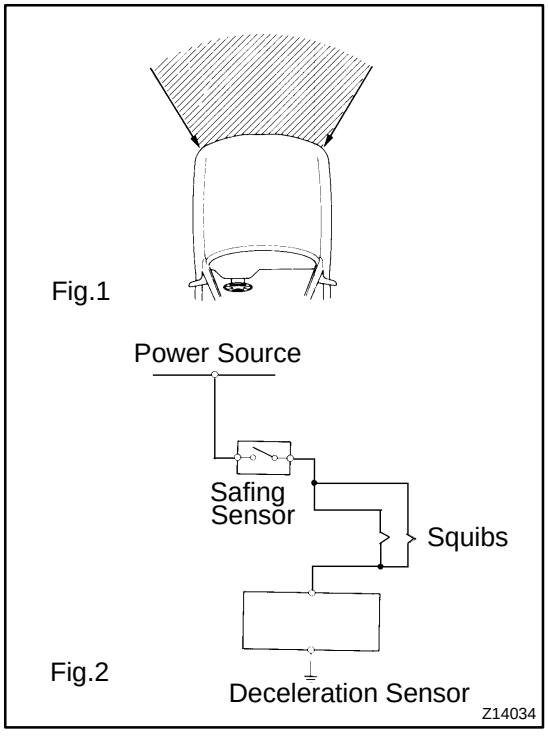

(b) When the vehicle is involved in a frontal collision in the hatched area (Fig. 1) and the shock is larger than the predetermined level, the SRS is activated automatically. A safing sensor is designed to go on at a smaller deceleration rate than the airbag sensor. As illustrated in Fig. 2, ignition is caused when current flows to the squib, which happens when a safing sensor and the deceleration sensor go on simultaneously. When a deceleration force acts on the sensors, 2 squibs in the driver airbag and front passenger airbag ignite and generate gas. The gas discharging into the driver airbag and front passenger airbag rapidly increases the pressure inside the bags, breaking open the steering wheel pad and instrument panel.
Bag inflation then ends, and the bags deflate as the gas is discharged through discharge holes at the bag's rear or side.

10. DISCONNECTION OF CONNECTORS FOR STEERING WHEEL PAD (with AIRBAG) AND FRONT PASSENGER AIRBAG ASSEMBLY

(a) Place a finger on the slider.

(b) Slide the slider to release lock.
(c) Disconnect the connector.

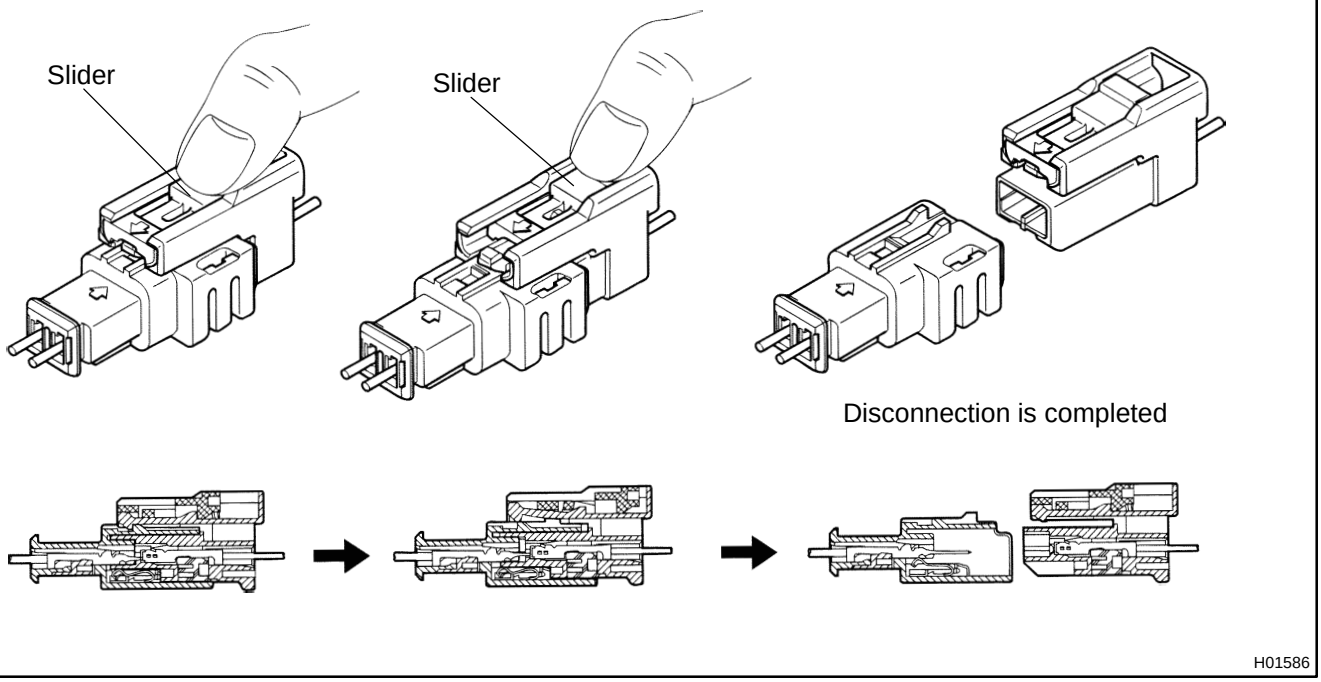

11. CONNECTION OF CONNECTORS FOR STEERING WHEEL PAD (with AIRBAG) AND FRONT PASSENGER AIRBAG ASSEMBLY

(a) Align a lock part of male connector and a slider of female connector in the same direction as shown in the illustration, fit in them without rubbing.
(b) Be sure to insert until they are locked. After fitting in pull them slightly to check that they are locked (When locked, make sure that the outer returns to its original position and the click can be heard at the time of fitting in.).

HINT:

- As the slider slides, do not touch it.
- Be careful not to deform the release board. If the release board is deformed, replace it with a new one.

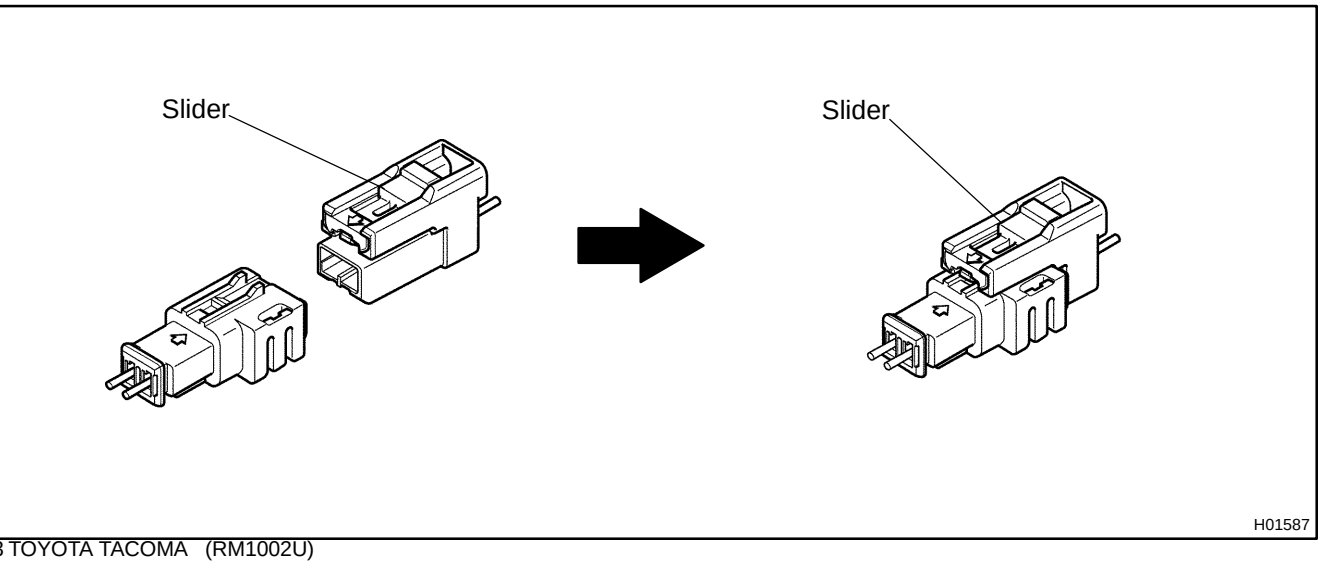

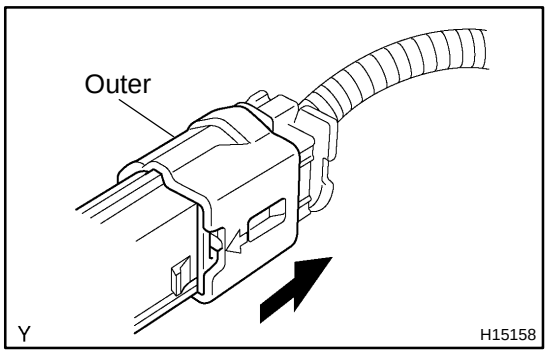

12. DISCONNECTION OF CONNECTORS FOR FRONT AIRBAG SENSOR

(a) While holding both flank sides of the outer, slide the outer to the direction shown by an arrow.

(b) Lock of the connectors is released, then disconnect the connectors.

HINT:

Be sure to hold both flank sides of the outer. If holding the top and bottom sides, it will obstruct disconnection.

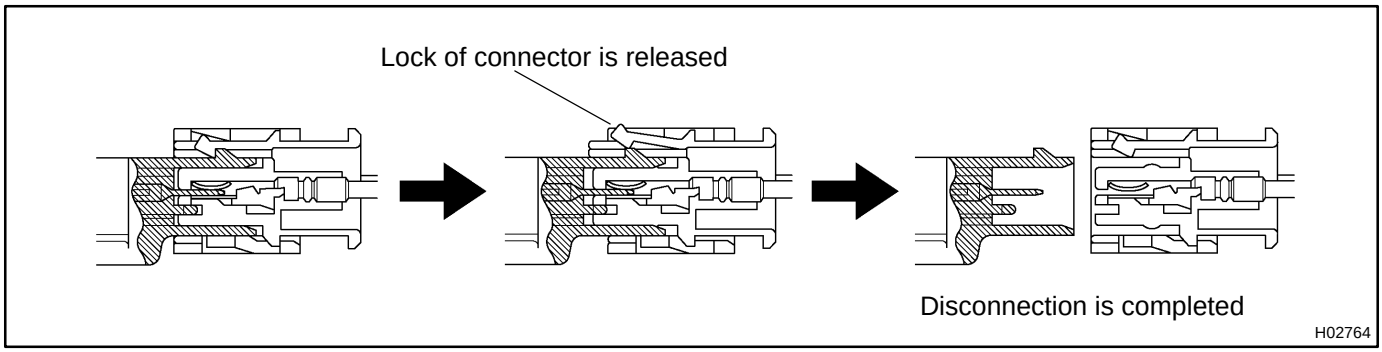

13. CONNECTION OF CONNECTORS FOR FRONT AIRBAG SENSOR

(a) Align the male connector (of the side of sensor) and female connector in the same direction as shown in the illustration and fit in them without rubbing.

(b) As they are fitted in, the outer slides rearward. Press it until the outer returns to its original position again.

If fitting stops half way, connectors will separate.

(c) Be sure to insert until they are locked. After fitting in, pull them slightly to check that they are locked (When locked, make sure that the outer returns to its original position and the click can be heard at the time of fitting in.).

HINT:

- Do not fit in while holding the outer.
- When fitting in, the outer slides. Do not touch it.

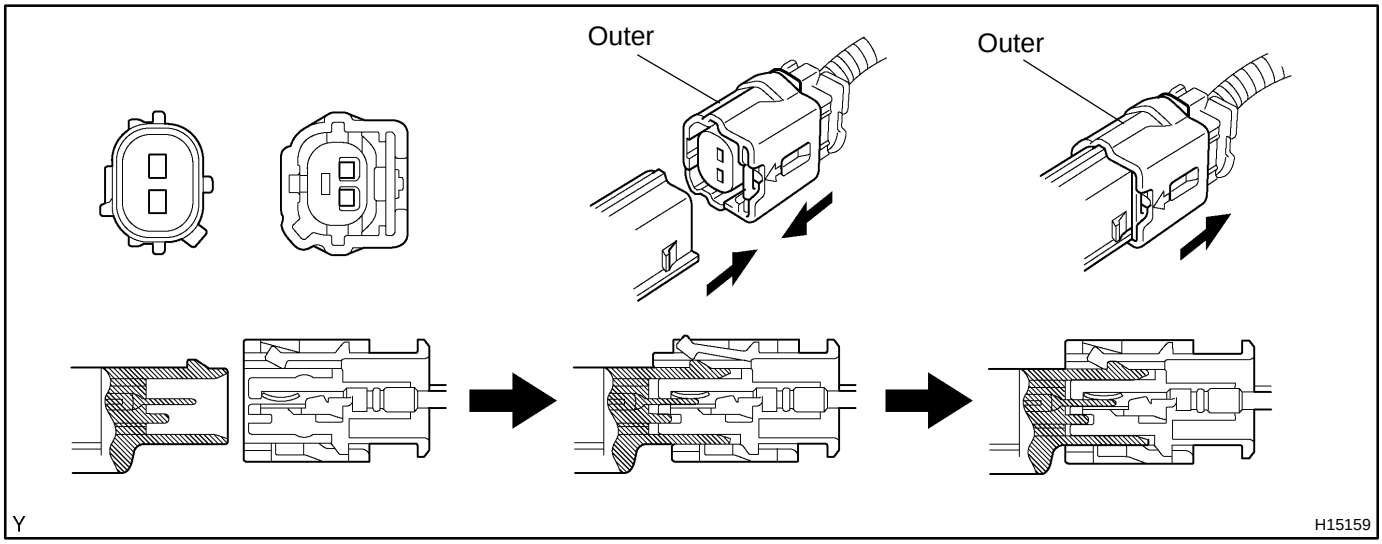

SRS AIRBAG

RS021–05

PRECAUTION

CAUTION:

- **The TOYOTA TACOMA is equipped with SRS, which comprises a driver airbag, front passenger airbag and failure to carry out service operations in the correct sequence could cause the SRS to unexpectedly deploy during servicing, possibly leading to a serious accident. Further, if a mistake is made in servicing the SRS, it is possible that the SRS may fail to operate when required. Before performing servicing (including removal or installation of parts, inspection or replacement), be sure to read the following items carefully, then follow the correct procedures described in the repair manual.**
- **Work must be started 90 seconds after the ignition switch is turned to the "LOCK" position and the negative (–) terminal cable is disconnected from the battery.**
  (The SRS is equipped with a back–up power source so that if work is started within 90 seconds from disconnecting the negative (–) terminal cable of the battery, the SRS may be deployed.)
- **Do not expose the steering wheel pad, front passenger airbag assembly, airbag sensor assembly or front airbag sensor directly to hot air or flames.**

NOTICE:

- **Malfunction symptoms of the SRS are difficult to confirm, so the DTCs become the most important source of information when troubleshooting. When troubleshooting the SRS, always inspect the DTCs before disconnecting the battery.**
- **Even in cases of a minor collision where the SRS does not deploy, the steering wheel pad, front passenger airbag assembly, airbag sensor assembly and front airbag sensor should be inspected (See pages RS–12, RS–26, RS–38 and RS–43).**
- **Before repairs, remove the airbag sensor if shocks are likely to be applied to the sensor during repairs.**
- **Never use SRS parts from another vehicle. When replacing parts, replace them with new parts.**
- **Never disassemble and repair the steering wheel pad, front passenger airbag assembly, airbag sensor assembly or front airbag sensor, in order to reuse it.**
- **If the steering wheel pad, front passenger airbag assembly, airbag sensor assembly or front airbag sensor, has been dropped, or if there are cracks, dents or other defects in the case, bracket or connector, replace it with new one.**
- **Use a volt/ohmmeter with high impedance (10 kΩ/V minimum) for troubleshooting the system's electrical circuits.**
- **Information labels are attached to the periphery of the SRS components. Follow the instructions on the notices.**
- **After work on the SRS is completed, check the SRS warning light check (See page DI–588).**
- **When the negative (–) terminal cable is disconnected from the battery, the memory of the clock and audio system will be canceled. So before starting work, make a record of the contents memorized in the audio memory system. When work is finished, reset the audio systems as they were before and adjust the clock. To avoid erasing the memory in each memory system, never use a back– up power supply from outside the vehicle.**
- **If the vehicle is equipped with a mobile communication system, refer to the precaution in the IN section.**

STEERING WHEEL PAD AND SPIRAL CABLE

COMPONENTS

RS023–05

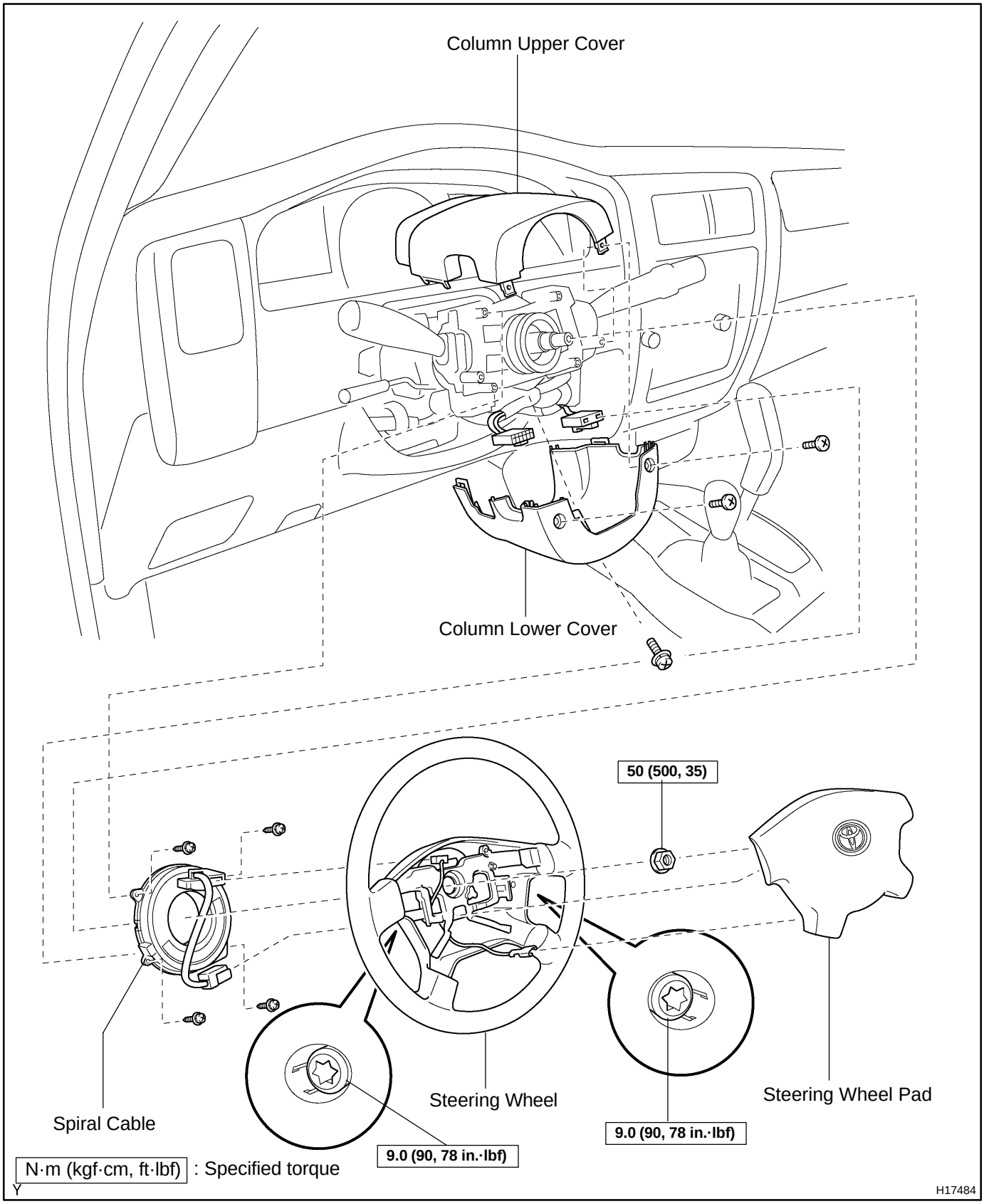

RS0J7–02

DISPOSAL

HINT:

When scrapping vehicle equipped with an SRS or disposing of a steering wheel pad (with airbag), always first deploy the airbag in accordance with the procedure described below. If any abnormality occurs with the airbag deployment, contact the SERVICE DEPT. of TOYOTA MOTOR SALES, U.S.A., INC.

CAUTION:

- **Never dispose of a steering wheel pad which has an undeployed airbag.**
- **The airbag produces a sizeable exploding sound when it deploys, so perform the operation out–of–doors and where it will not create a nuisance to nearby residents.**

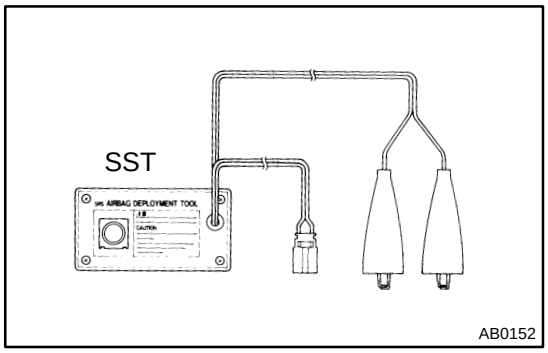

- **When deploying the airbag, always use the specified SST (SRS Airbag Deployment Tool). Perform the operation in a place away from electrical noise.**
  SST 09082–00700
- **When deploying an airbag, perform the operation at least 10 m (33 ft) away from the steering wheel pad.**
- **The steering wheel pad is very hot when the airbag is deployed, so leave it alone for at least 30 minutes after deployment.**
- **Use gloves and safety glasses when handling a steering wheel pad with the deployed airbag.**
- **Always wash your hands with water after completing the operation.**
- **Do not apply water, etc. to a steering wheel pad with the deployed airbag.**

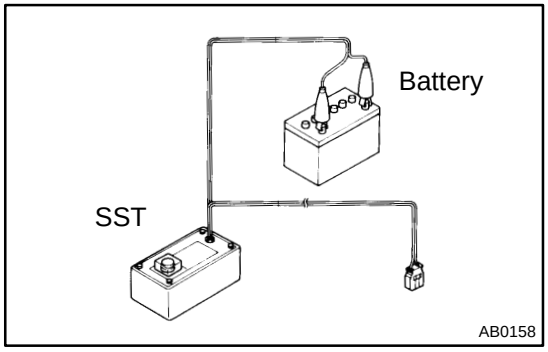

1. AIRBAG DEPLOYMENT WHEN SCRAPPING VEHICLE

HINT:

Have a battery ready as the power source to deploy the airbag.

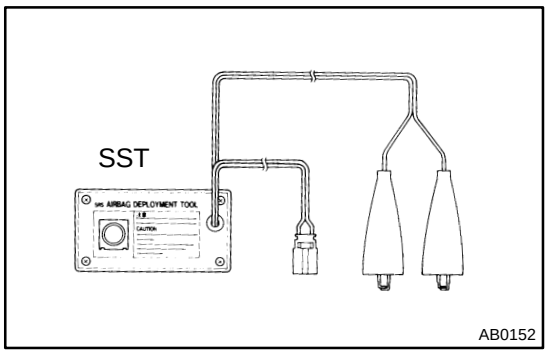

(a) Check functioning of the SST.

CAUTION:

When deploying the airbag, always use the specified SST: SRS Airbag Deployment Tool.

SST 09082–00700

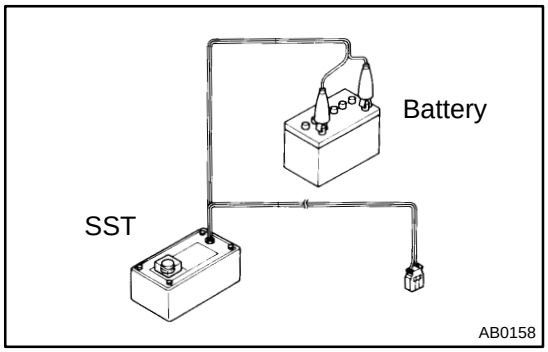

(1) Connect the red clip of the SST to the battery positive (+) terminal and the black clip to the battery negative (–) terminal.

HINT:

Do not connect the yellow connector which will be connected with the supplemental restraint system.

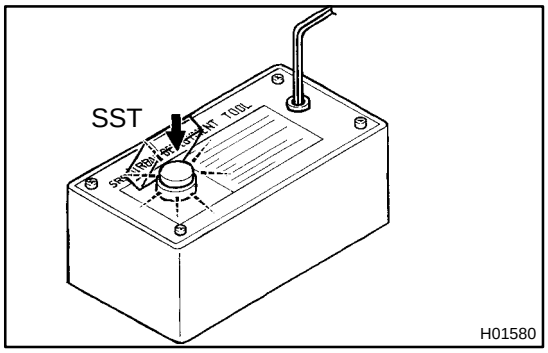

(2) Press the SST activation switch, and check that the LED of the SST activation switch lights up.

CAUTION:

If the LED lights up when the activation switch is not being pressed, SST malfunction is probable, so definitely do not use the SST.

(3) Disconnect the SST from the battery.

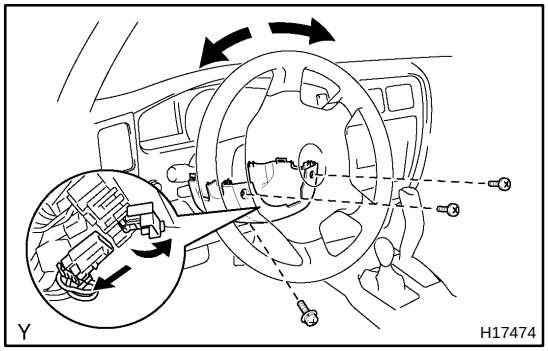

(b) Install the SST.

CAUTION:

Check that there is no looseness in the steering wheel and steering wheel pad.

(1) Remove the steering column lower cover.
Remove the 3 screws and steering column lower cover as shown in the illustration.

(2) Disconnect the airbag connector of the spiral cable.

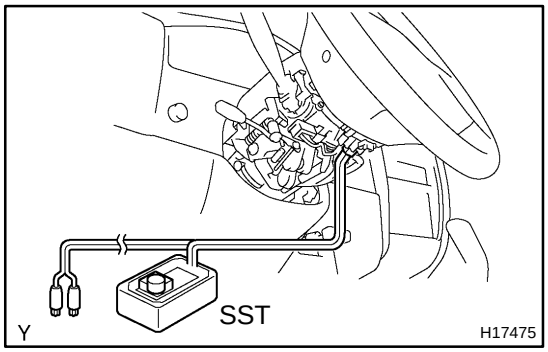

(3) Connect the connector of the SST to the airbag connector of the spiral cable.

SST 09082–00700

NOTICE:

To avoid damaging the connector of the SST and wire harness, do not lock the secondary lock of the twin lock.

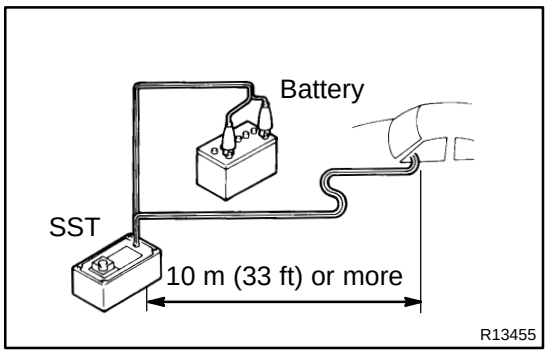

(4) Move the SST at least 10 m (33 ft) away from the front of the vehicle.

(5) Close all the doors and windows of the vehicle.

NOTICE:

Take care not to damage the SST wire harness.

(6) Connect the SST red clip to the battery positive (+) terminal and the black clip to the negative (–) terminal.

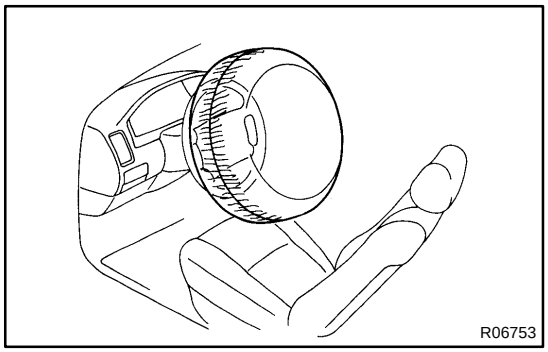

(c) Deploy the airbag.

(1) Check that no one is inside the vehicle or within 10 m (33 ft) area around the vehicle.

(2) Press the SST activation switch and deploy the airbag.

CAUTION:

- **The steering wheel pad is very hot when the airbag is deployed, so leave it alone for at least 30 minutes after deployment.**
- **Use gloves and safety glasses when handling a steering wheel pad with the deployed airbag.**
- **Always wash your hands with water after completing the operation.**
- **Do not apply water, etc. to a steering wheel pad with the deployed airbag.**
- **When scrapping a vehicle, deploy the airbag and scrap the vehicle with the steering wheel pad still installed.**
- **When moving a vehicle for scrapping which has a steering wheel pad with deployed airbag, use gloves and safety glasses.**

HINT:

The airbag deploys simultaneously as the LED of the SST activation switch lights up.

2. DEPLOYMENT WHEN DISPOSING OF STEERING WHEEL PAD ONLY

NOTICE:

- **When disposing of the steering wheel pad (with airbag) only, never use the customers vehicle to deploy the airbag.**
- **Be sure to follow the procedure given below when deploying the airbag.**

HINT:

Have a battery ready as the power source to deploy the airbag.

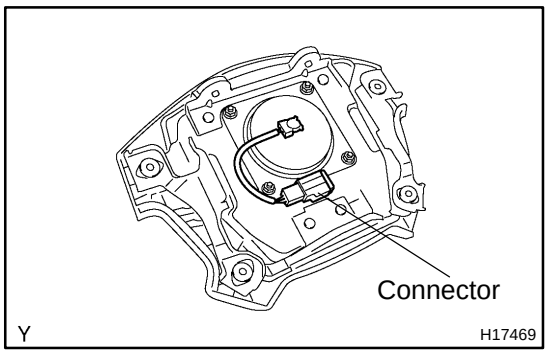

(a) Remove the steering wheel pad (See page SR–14).

CAUTION:

- **When removing the steering wheel pad, work must be started 90 seconds after the ignition switch is turned to the "LOCK" position and the negative (–) terminal cable is disconnected from the battery.**
- **When storing the steering wheel pad, keep the upper surface of the pad facing upward.**

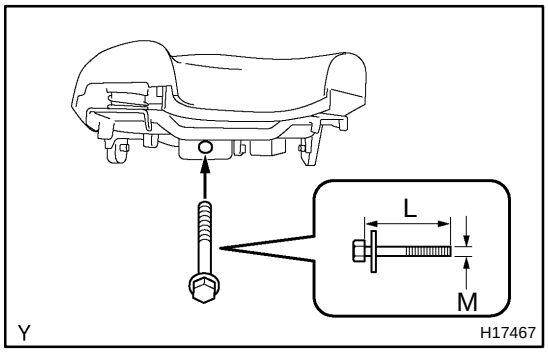

(b) Fix the steering wheel pad to the disc wheel with tire.

(1) Install the 2 bolts with washers in the 2 bolt holes in the steering wheel pad.

Bolt:

L: 35. mm (1.387 in.)

M: 6.0 mm (0.236 in.)

Pitch: 1.0 mm (0.039 in.)

NOTICE:

- **Tighten the bolts by hand until the bolts become difficult to turn.**
- **Do not tighten the bolts too much.**

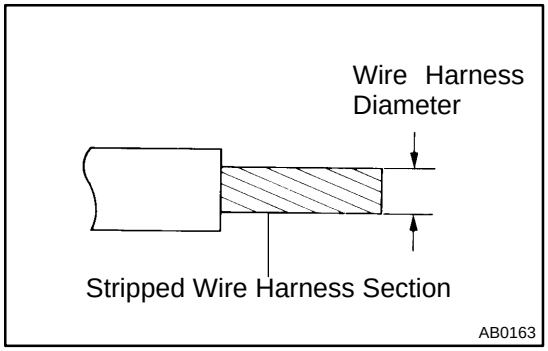

(2) Using a service–purpose wire harness tie down the steering wheel pad to the disc wheel.

Wire harness: Stripped wire harness section 1.25 mm^2 or more (0.0019 in^2. or more)

CAUTION:

If a wire harness which is too thin or some other thing is used to tie down the steering wheel pad, it may be snapped by the shock when the airbag is deployed. This is highly dangerous. Always use a wire harness for vehicle use which is at least 1.25 mm^2 (0.0019 in^2.).

HINT:

To calculate the square of the stripped wire harness section:

Square = 3.14 x $(Diameter)^2$ divided by 4

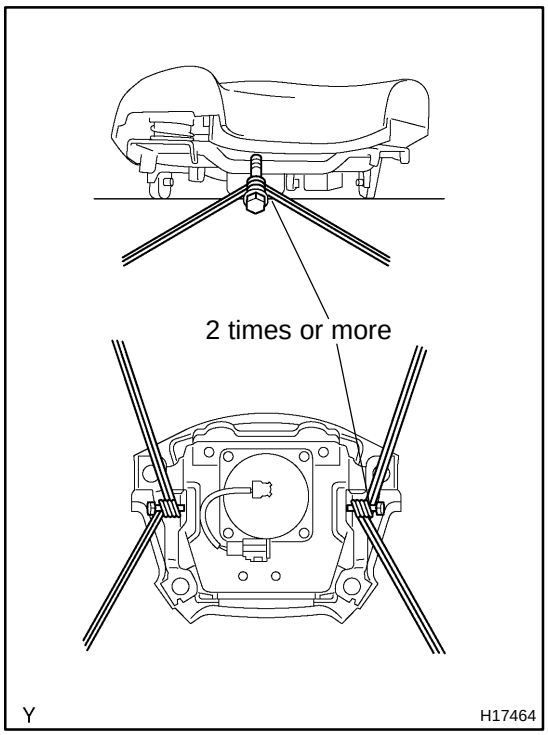

(3) Using 3 wire harness, wind the wire harness at least 2 times each around the bolts installed on the left and right sides of the steering wheel pad.

CAUTION:

- **Tightly wind the wire harness around the bolts so that there is no slack.**
- **If there is slackness in the wire harness, the steering wheel pad may come loose due to the shock when the airbag is deployed. This is highly dangerous.**

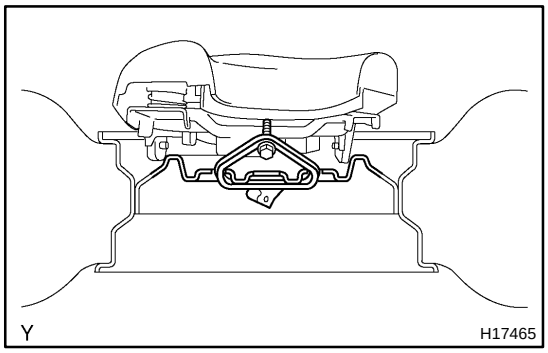

(4) Face the upper surface of the steering wheel pad upward. Separately tie the left and right sides of the steering wheel pad to the disc wheel through the hub nut holes. Position the steering wheel pad connector so that it hangs downward through a hub hole in the disc wheel.

CAUTION:

- **Make sure that the wire harness is tight. It is very dangerous when looseness in the wire harness results in the steering wheel pad coming free due to the shock from the airbag deploying.**
- **Always tie down the steering wheel pad with the pad side facing upward. It is very dangerous if the steering wheel pad is tied down with the metal surface facing upward as the wire harness will be cut by the shock from the airbag deploying and the steering wheel pad will be thrown into the air.**

NOTICE:

The disc wheel will be marked by airbag deployment, so when disposing of the airbag use a redundant disc wheel.

(c) Check functioning of the SST (See step 1–(a)).
SST 09082–00700

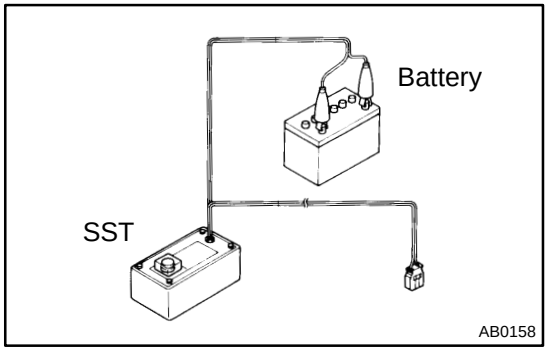

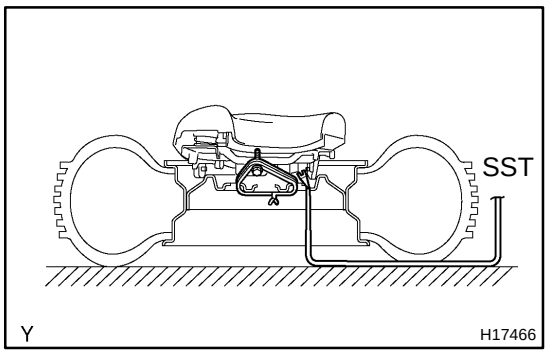

(d) Install the SST.

CAUTION:

Place the disc wheel on the level ground.

(1) Connect the connector of the SST to the steering wheel pad connector.

SST 09082–00700, 09082–00760

NOTICE:

To avoid damaging the SST connector and wire harness, do not lock the secondary lock of the twin lock. Also, secure some slack for the SST wire harness inside the disc wheel.

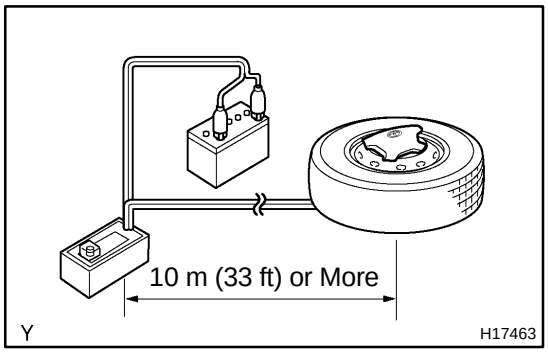

(2) Move the SST to at least 10 m (33 ft) away from the steering wheel pad tied down on the disc wheel.

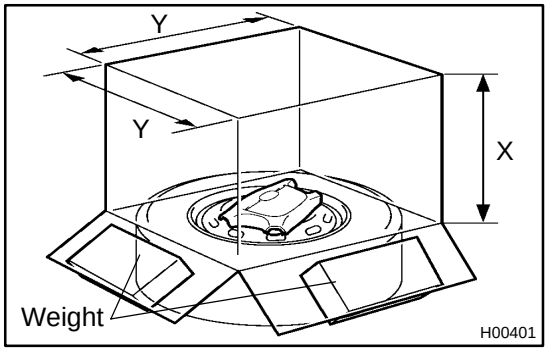

(e) Cover the steering wheel pad with a cardboard box or tires.

- Covering method using a cardboard box:
  Cover the steering wheel pad with the cardboard box and weight the cardboard box down in 4 places with at least 190 N (20 kg, 44 lb).

Size of cardboard box:

Must exceed the following dimensions:

X = 460 mm (18.11 in.)

Y = 650 mm (25.59 in.)

NOTICE:

- **When dimension Y of the cardboard box exceeds the diameter of the disc wheel with tire to which the steering wheel pad is tied, X should be the following size.**
  X = 460 mm (18.11 in.) + width of tire
- **If a cardboard box smaller than the specified size is used, the cardboard box will be broken by the shock from the airbag deployment.**

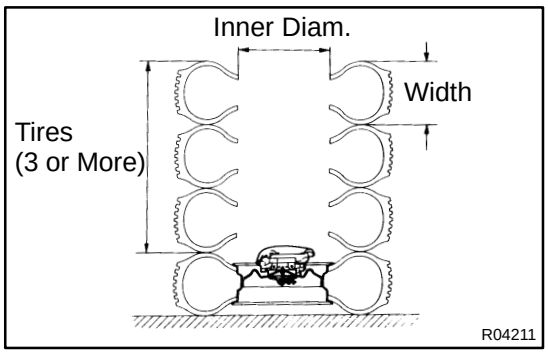

- Covering method using tires:
  Place at least 3 tires without disc wheel on top of the disc wheel with tire to which the steering wheel pad is tied.

Tire size: Must exceed the following dimensions–
Width: 185 mm (7.87 in.)
Inner diameter: 360 mm (14.17 in.)

CAUTION:
Do not use tires with disc wheels.

NOTICE:
The tires may be marked by the airbag deployment, so use the redundant tires.

(f) Deploy the airbag.
  (1) Connect the SST red clip to the battery positive (+) terminal and the black clip to the battery negative (–) terminal.

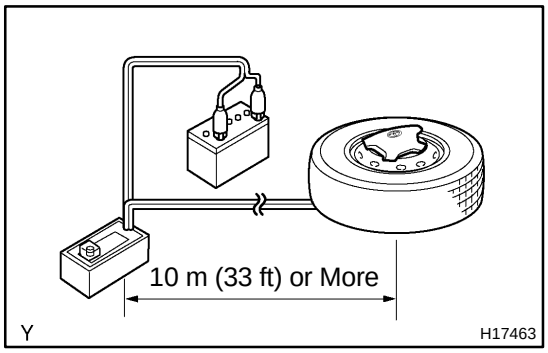

  (2) Check that no one is within 10 m (33 ft) area around the disc wheel which the steering wheel pad is tied to.
  (3) Press the SST activation switch and deploy the airbag.

HINT:
The airbag deploys simultaneously as the LED of the SST activation switch lights up.

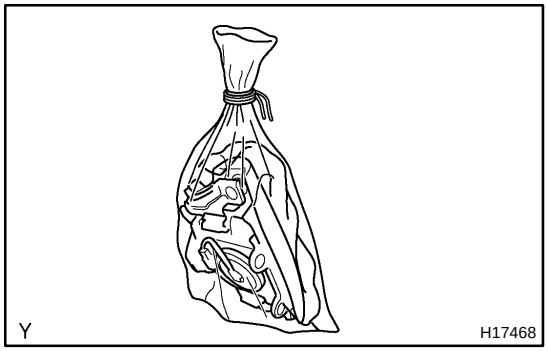

(g) Dispose of the steering wheel pad (with airbag).

CAUTION:
- **The steering wheel pad is very hot when the airbag is deployed, so leave it alone for at least 30 minutes after deployment.**
- **Use gloves and safety glasses when handling a steering wheel pad with the deployed airbag.**
- **Always wash your hands with water after completing the operation.**
- **Do not apply water, etc. to a steering wheel pad with the deployed airbag.**
  (1) Remove the steering wheel pad from the disc wheel.
  (2) Place the steering wheel pad in a vinyl bag, tie the end tightly and dispose of it in the same way as other general parts disposal.

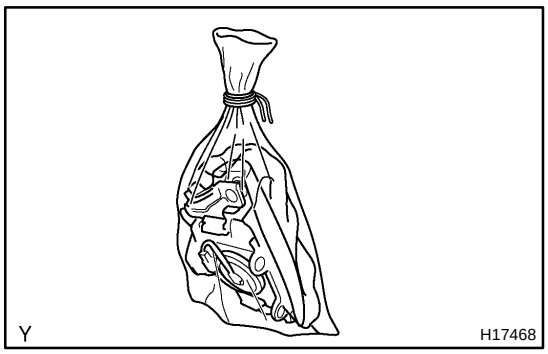

3. DEPLOYMENT WHEN DISPOSING OF STEERING WHEEL PAD WITH AIRBAG DEPLOYED IN COLLISION

Dispose of the steering wheel pad (with airbag).

CAUTION:

- **The steering wheel pad is very hot when the airbag is deployed, so leave it alone for at least 30 minutes after deployment.**
- **When moving a vehicle for scrapping which has a steering wheel pad with the deployed airbag, use gloves and safety glasses.**
- **Use gloves and safety glasses when handling a steering wheel pad with deployed airbag.**
- **Always wash your hands with water after completing the operation.**
- **Do not apply water, etc. to a steering wheel pad with deployed airbag.**

(1) Remove the steering wheel pad from the steering wheel (See page SR–14).

(2) Place the steering wheel pad in a vinyl bag, tie the end tightly and dispose of it in the same way as other general parts disposal.

RS0J6–02

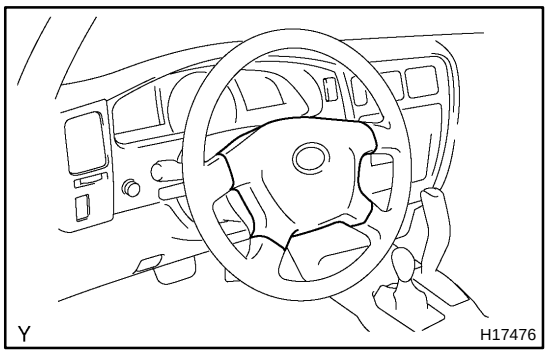

INSPECTION

1. Vehicle not involved in collision:

INSPECT SUPPLEMENTAL RESTRAINT SYSTEM

(a) Do a diagnostic system check (See page DI–588).

(b) Do a visual check which includes the following item with the steering wheel pad (with airbag) installed in the vehicle.

Check cuts, minute cracks or marked discoloration on the steering wheel pad top surface and in the grooved portion.

2. Vehicle involved in collision and airbag is not deployed:

INSPECT SUPPLEMENTAL RESTRAINT SYSTEM

(a) Do a diagnostic system check (See page DI–588).

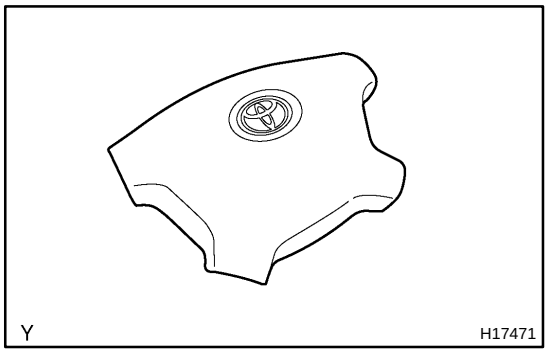

(b) Do a visual check which includes the following items with the steering wheel pad (with airbag) removed from the vehicle.

- Check cuts, minute cracks or marked discoloration on the steering wheel pad top surface and in the grooved portion.
- Check cuts and cracks in wire harness, and chipping in connectors.

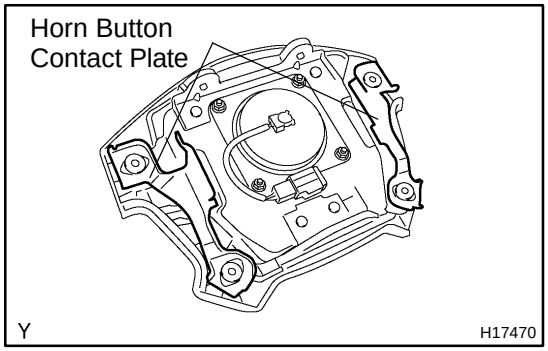

- Check the deformation of the horn button contact plate on the steering wheel pad.

HINT:

- If the horn button contact plate of the steering wheel pad is deformed, never repair it. Always replace the steering wheel pad with a new one.

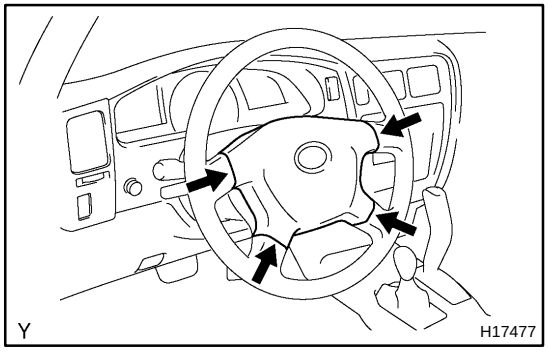

- There should be no interference between the steering wheel pad and steering wheel, and the clearance should be uniform all the way around when the new steering wheel pad is installed on the steering wheel.

CAUTION:

For removal and installation of the steering wheel pad, see page SR–14 and SR–21, be sure to follow the correct procedure.

3. Vehicle involved in collision and airbag is deployed: INSPECT SUPPLEMENTAL RESTRAINT SYSTEM

(a) Do a diagnostic system check (See page DI–588).

(b) Do a visual check which includes the following items with the steering wheel pad (with airbag) removed from the vehicle.

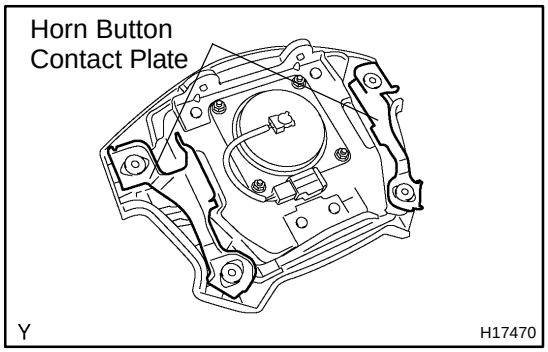

- Check the deformation on the horn button contact plate of the steering wheel pad.
- Check the damage on the spiral cable connector and wire harness.

HINT:

- If the horn button contact plate of the steering wheel pad is deformed, never repair it. Always replace the steering wheel pad with a new one.

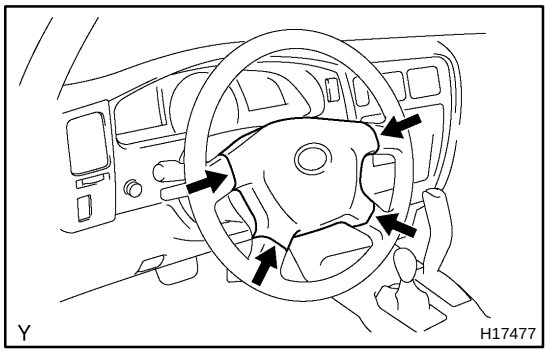

- There should be no interference between the steering wheel pad and steering wheel, and the clearance should be uniform all the way around when the new steering wheel pad is installed on the steering wheel.

CAUTION:

For removal and installation of the steering wheel pad, see page SR–14 and SR–21, and be sure to follow the correct procedure.

RS028–03

INSTALLATION

HINT:

For step 1 to 6, refer to page SR–21.

1. **INSTALL SPIRAL CABLE**
2. **INSTALL UPPER AND LOWER COLUMN COVERS**
3. **INSTALL STEERING WHEEL**
4. **INSTALL STEERING WHEEL PAD**

RS024–03

REMOVAL

HINT:

For step 1 to 4, refer to page SR–14.

1. **REMOVE STEERING WHEEL PAD**
2. **REMOVE STEERING WHEEL**
3. **REMOVE UPPER AND LOWER COVERS**
4. **REMOVE SPIRAL CABLE**

RS027–04

REPLACEMENT

REPLACEMENT REQUIREMENTS

In the following cases, replace the steering wheel pad, steering wheel or spiral cable.

Case	Replacing part
If the airbag has been deployed.	Steering wheel pad
If the steering wheel pad has been found to be faulty in troubleshooting.	Steering wheel pad
If the spiral cable has been found to be faulty in troubleshooting.	Spiral cable
If the steering wheel pad has been found to be faulty during checking items. (See page RS–12)	Steering wheel pad
If the steering wheel has been found to be faulty during checking items. (See page RS–12)	Steering wheel
If the spiral cable has been found to be faulty during checking items. (See page RS–12)	Spiral cable
If the steering wheel pad has been dropped.	Steering wheel pad

CAUTION:

For removal and installation of the steering wheel pad, see page SR–14 and SR–21. Be sure to follow the correct procedure.

RS02L–03

INSPECTION

HINT:

The SRS wire harness is integrated with the cowl wire harness assembly. The wires for the SRS wire harness are encased in a yellow corrugated tube and all the connectors in the system are a standard yellow color.

1. VEHICLE NOT INVOLVED IN COLLISION

Do a diagnostic system check (See page DI–588).

2. VEHICLE INVOLVED IN COLLISION

(a) Do a diagnostic system check (See page DI–588).

(b) Check for breaks in all wires of the SRS wire harness, and for exposed conductors.

(c) Check to see if the SRS wire harness connectors are cracked or chipped.

WIRE HARNESS AND CONNECTOR

RS02K–05

LOCATION

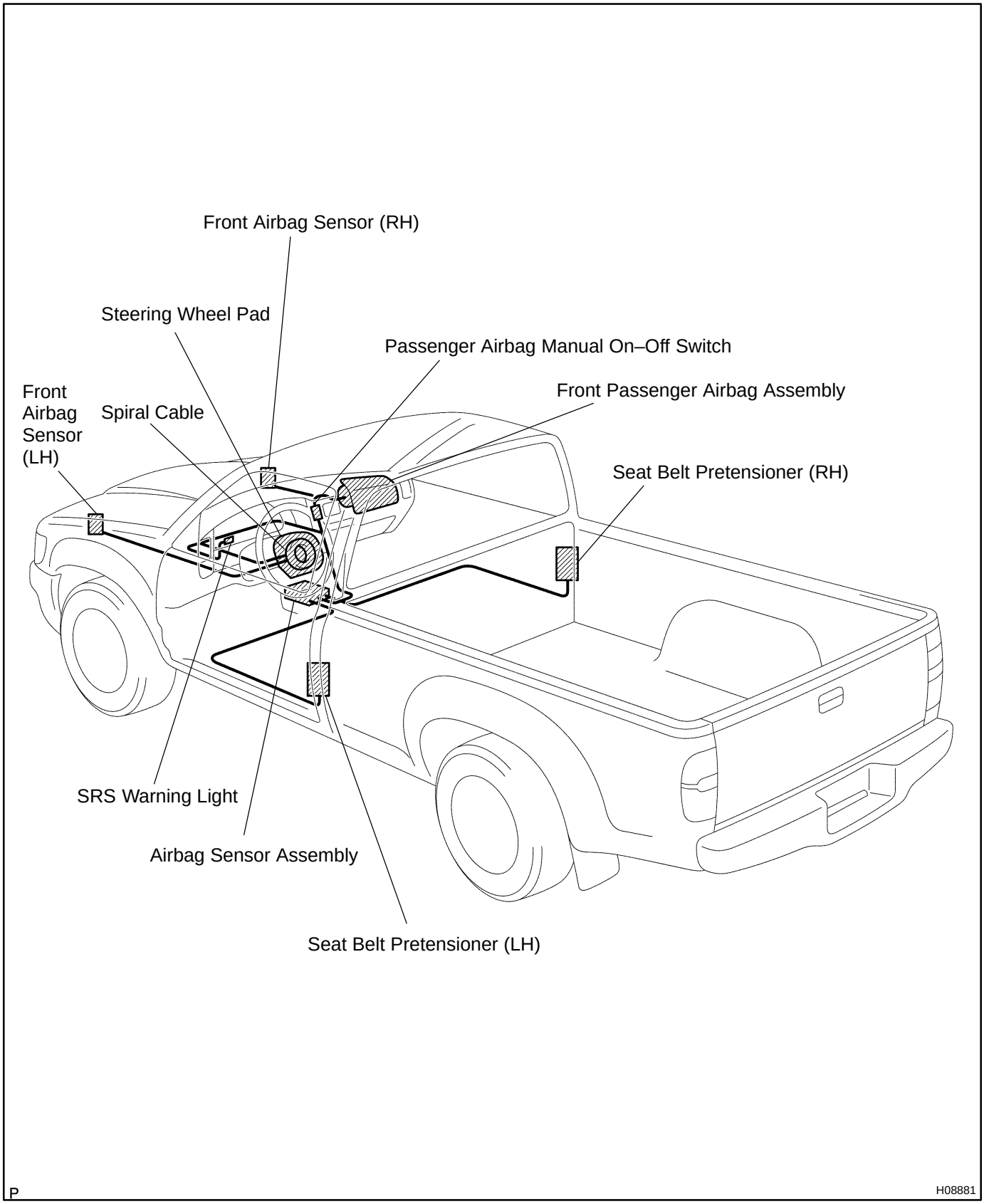

RS02M–03

REPLACEMENT

REPLACEMENT REQUIREMENTS

In the following cases, replace the wire harness or connector.

- If any part of the SRS wire harness or any connector has been found to be faulty in troubleshooting.
- If any part of the SRS wire harness or any connector has been found to be faulty during checking items 2–(b) or (c).

NOTICE:

If the wire harness used in the SRS is damaged, replace the whole wire harness assembly.

SA22S–01

INSPECTION

1. INSPECT A.D.D. ACTUATOR

(a) Disconnect the actuator connector.

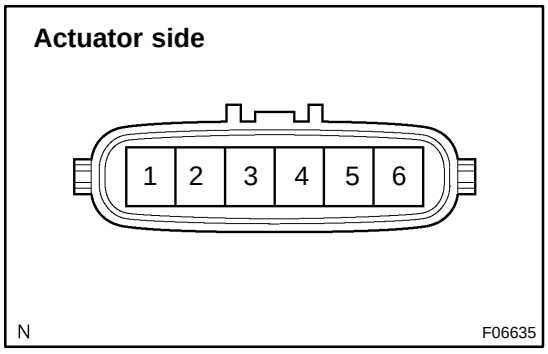

(b) Measure the resistance between the terminals 2 and 6.
Standard resistance: 0.3 – 100 Ω

(c) Measure the resistance between the terminals 2 or 6 and body ground.
Standard resistance: More than 0.5 MΩ

If the resistance value is not as specified, replace the actuator assembly.

2. INSPECT A.D.D. ACTUATOR OPERATION

Apply battery positive voltage between the terminal 2 or 6, and check the actuator operation by sound, A.D.D. status and continuity between the terminal 3 and 4.

Battery voltage applied terminal	3–4 terminals continuity	A.D.D. status
2 (+) – 6 (–)	Continuity	Connected
2 (–) – 6 (+)	No continuity	Disconnected

If the operation is not as specified, replace the actuator assembly.

3. INSPECT LIMIT SWITCH CONTINUITY

(a) Connect the actuator connector.

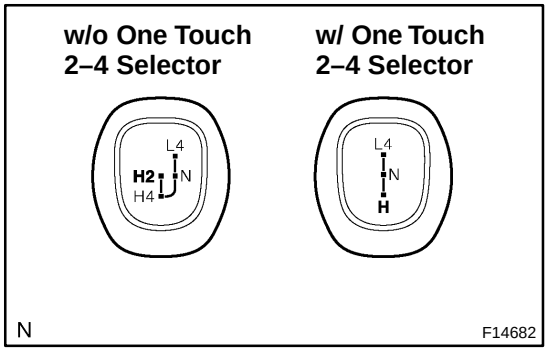

(b) w/o One touch 2–4 selector:
Shift the transfer shift lever to ”H2” position.

(c) w/ One touch 2–4 selector:
Shift the transfer shift lever to ”H” position.

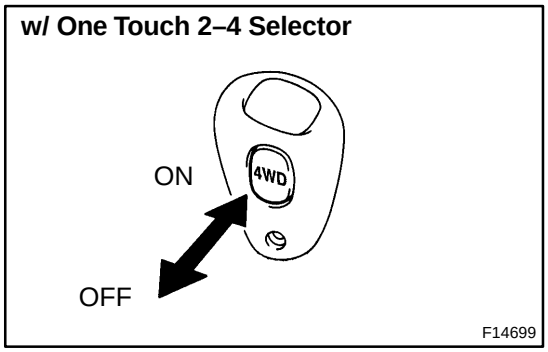

(d) w/ One touch 2–4 selector:
Switch the 2–4 selector switch to ”OFF”.

(e) Check the A.D.D. actuator operation by sound.

(f) Disconnect the actuator connector.

(g) Check the continuity between each terminal, as shown in the chart.

Tester connected terminal number	Specified condition
1 – 3	No continuity
1 – 4	No continuity
3 – 5	Continuity
4 – 5	No continuity

(h) Connect the actuator connector.

(i) w/ One touch 2–4 selector:
Switch the 2–4 selector switch to ”ON”.

w/o One Touch 2–4 Selector

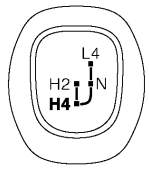

F14700

(j) w/o One touch 2–4 selector:
Shift the transfer shift lever to ”H4” position.

(k) Check the A.D.D. actuator operation by sound.

(l) Disconnect the actuator connector.

(m) Check the continuity between each terminal, as shown in the chart.

Tester connected terminal number	Specified condition
1 – 3	Continuity
1 – 4	No continuity
3 – 5	No continuity
4 – 5	No continuity

(n) Connect the actuator connector.

Relay side

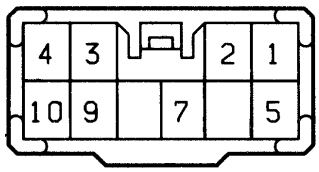

F14701

4. INSPECT A.D.D. RELAY

(a) Check the continuity between each terminal, as shown in the chart.

Tester connected terminal number	Specified condition
1 – 2	Continuity
2 – 4	Continuity
5 – 7	*

*: There is a diode between the terminals 5 and 7. If no continuity exists, check that continuity exists when changing the position of ⊕ probe for the position of negative ⊖ probe of tester.

(b) Apply battery positive voltage between each terminal and check the continuity between each terminal, as shown in the chart.

Battery voltage applied terminal	Tester connected terminal number	Specified condition
7 (+) – 5 (–)	1 – 3 1 – 2	Continuity No continuity
7 (+) – 2 (–)	9 – 10	No continuity
9 (+) – 10 (–)	3 – 4 2 – 4	Continuity No continuity

If continuity is not as specified, replace the relay.

5. INSPECT TRANSFER 4WD POSITION SWITCH (See page TR–13)

6. REMOVE A.D.D. ACTUATOR (See page SA–48)

7. INSPECT CLUTCH HUB AND CLUTCH SLEEVE

(a) Check the clutch hub and clutch sleeve for wear and damage.

If necessary, replace them.

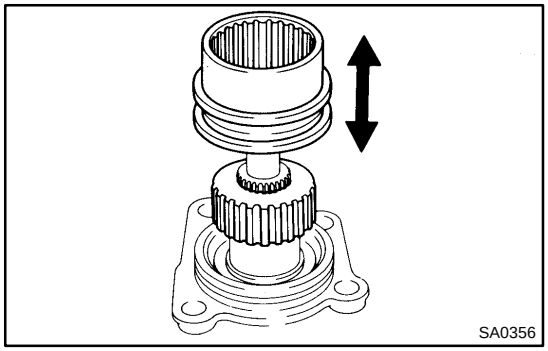

(b) Check that clutch sleeve slides smoothly on the clutch hub.

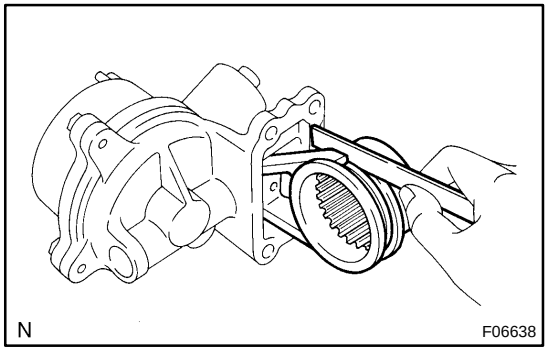

8. MEASURE SLEEVE FORK AND CLUTCH SLEEVE CLEARANCE

Using a feeler gauge, measure the clearance between the sleeve fork and clutch sleeve.

Maximum clearance: 0.35 mm (0.0138 in.)

If the clearance exceeds the maximum, replace the fork or sleeve.

A.D.D. CONTROL SYSTEM (4WD)

SA0BF–05

LOCATION

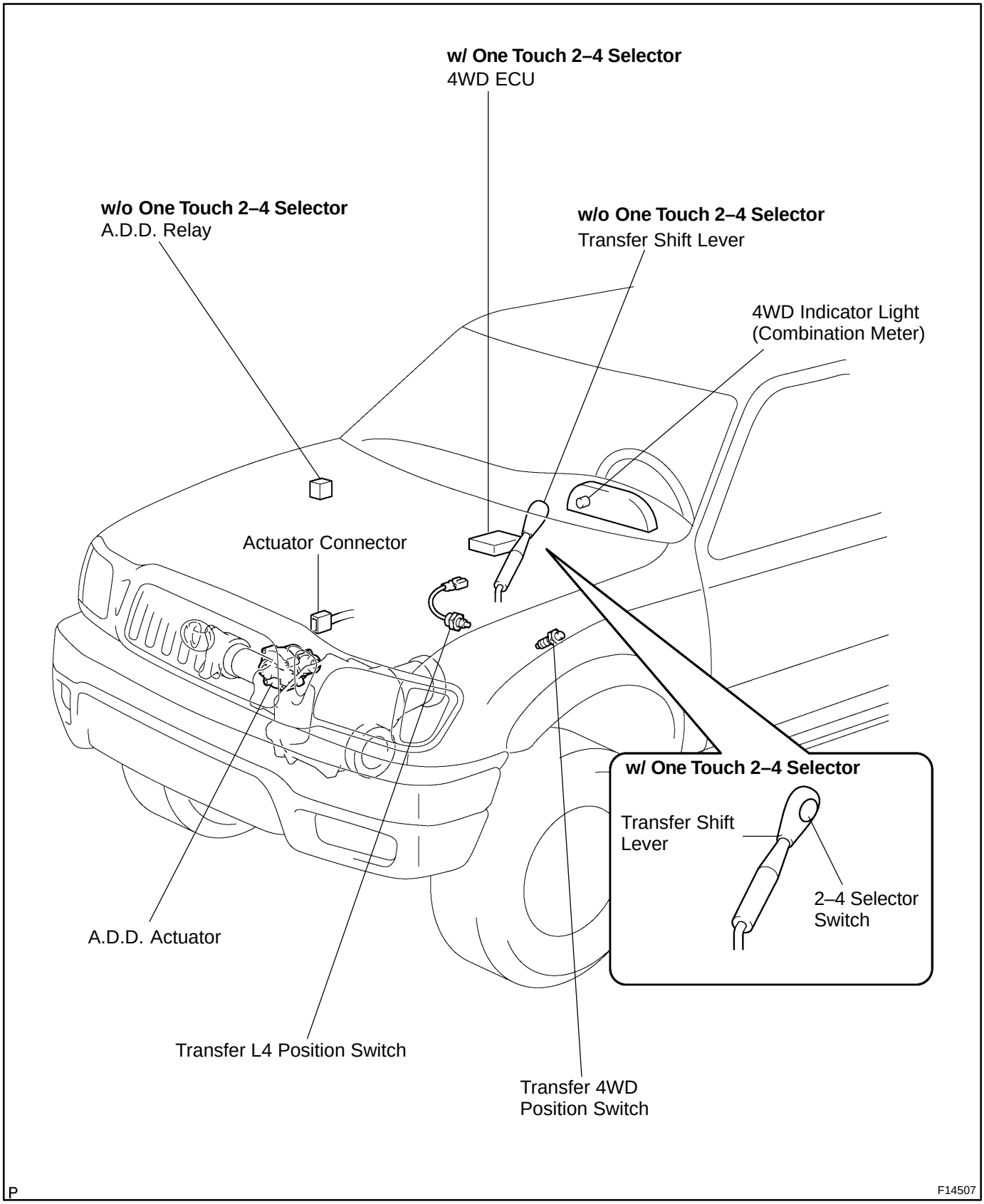

SA0BV–04

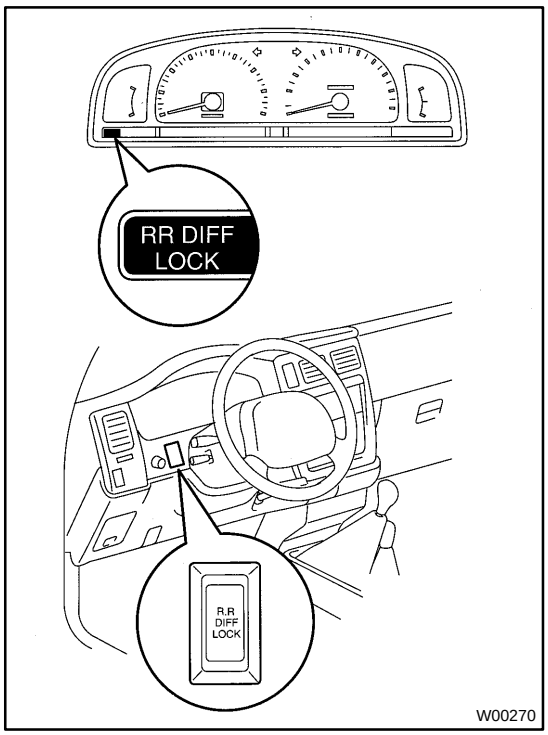

INSPECTION

1. INSPECT DIFFERENTIAL LOCK SYSTEM

(a) Inspect the indicator light.
Check that the indicator light lights up for approx. 1 second when the ignition switch is turned ON.

(b) Inspect the differential lock operation.
(1) Jack up the vehicle then start the engine.
(2) Shift the transfer shift lever to the L4 position.
(3) When the Diff. lock control switch is set to the ON position, the indicator light is turned on.
Differential lock is applied to the rear wheel at this time.

HINT:
If the gears of the differential lock system are not meshed, the indicator light remains blinking, so rotate the tires to mesh the gear.

(4) When the Diff. lock control switch is at the OFF position, the indicator light goes off.
Differential lock is released for the rear wheel at this time.

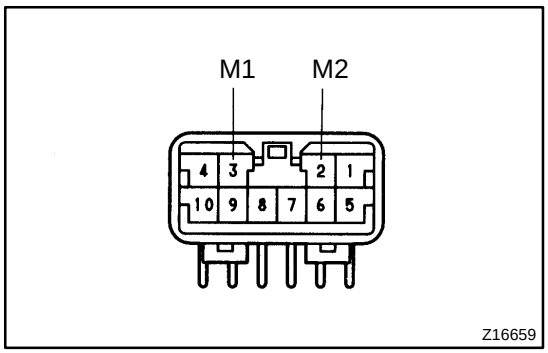

(5) Check the voltage between the terminals of the 4WD control ECU when switching the Diff. lock control switch with the speedometer, registering approx. 8 km/h (5 mph) or more.

Switch position	Terminal	Specified value
ON	M1 – M2	0.5 V or less (No change)

(6) Check that the indicator lights blink when 2WD mode is set.
Diff. lock is released for both the rear wheels at this time.
(7) Return the Diff. lock control switch to OFF.
(8) Stop the engine and lower the vehicle.

2. INSPECT DIFF. LOCK SYSTEM CIRCUIT

(a) Inspect the battery positive voltage.
Battery positive voltage: 10 – 14 V

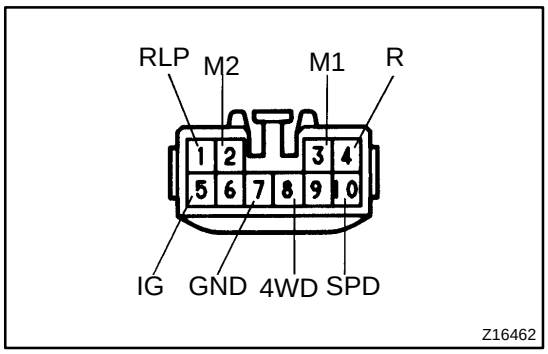

(b) Inspect the system circuit with the connector disconnected.
Disconnect the connector from the 4WD control ECU and inspect the connector on the wire harness side, as shown in the chart.

Symbols	Trouble part	Condition	Specified value
M1 – M2	RR Differential Lock Actuator	–	Less than 100 Ω
GND – Body ground	Body ground	–	Continuity
SPD – Body ground	Speed sensor	Vehicle moves slowly	1 pulse each 40 cm (15.75 in.)
IG – Body ground	DIFF Fuse	Ignition switch ON	10 – 14 V
RLP – Body ground	Rear Differential Lock Indicator Switch	Ignition switch ON with indicator light ON	About 0 V
		Ignition switch ON with indicator light OFF	10 – 14 V
4WD – Body ground	4WD Indicator Switch	Ignition switch ON with indicator light OFF	About 0 V
		Ignition switch ON with indicator light OFF	10 – 14 V
R – Body ground	Differential Lock Control Switch	Ignition switch ON with differential lock control switch ON	10 – 14 V
		Ignition switch ON with differential lock control switch OFF	About 0 V

HINT:
If the circuit is not as specified, check and repair or replace the trouble part shown in the table above.

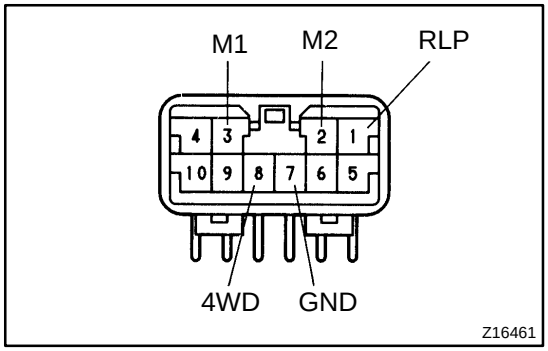

(c) Inspect the system circuit with the connector connected.
(1) Turn the ignition switch to the ON position.
(2) Keep the center Diff. lock condition.
(3) Remove the Diff. lock ECU.
(4) Using a voltmeter, measure the voltage when the differential lock control switch is in the position as shown below.

Tester Connection ⊕ – ⊖	Switch position	Specified valve
4WD – GND	–	0.5 V or less
RLP – GND	ON	0.5 V or less → 10 – 14 V (Approx. 1 sec.) → 0.5 V or less
M1 – M2	OFF – ON	
M2 – M1	ON – OFF	

If the circuit is not as specified, replace the ECU.
(5) Install the ECU in place.

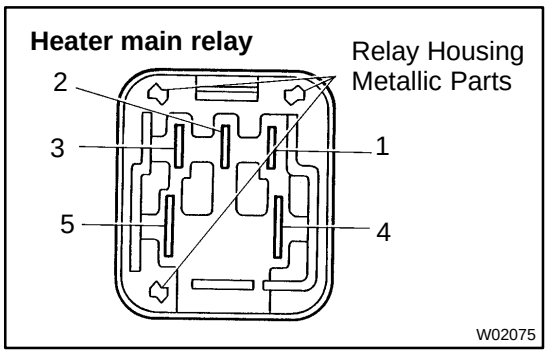

3. INSPECT DIFF. LOCK COMPONENTS

(a) Inspect the relay operation.

(1) Jack up the vehicle.

(2) Use a heater main relay and connect it, as shown in the chart.

NOTICE:

Connect the terminals being careful not to touch the neighboring terminals or metallic parts of the relay housing.

(3) Rotate the tire and check that differential lock has occurred.

If operation is not as specified, replace the actuator.

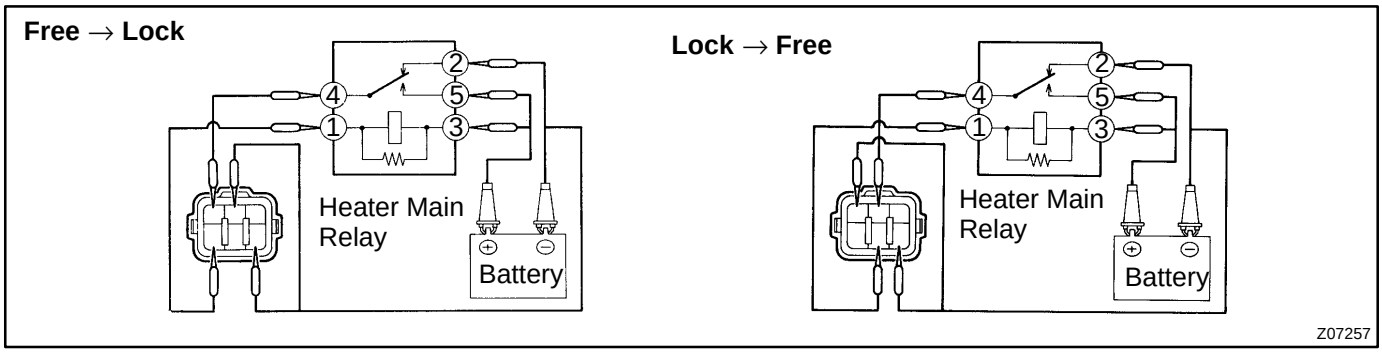

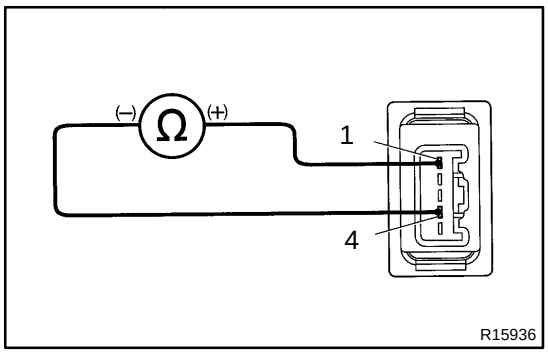

(b) Inspect the Diff. lock control switch continuity.

Inspect the switch continuity between terminal 1 and terminal 4.

HINT:

Continuity doesn't exist, replace the switch.

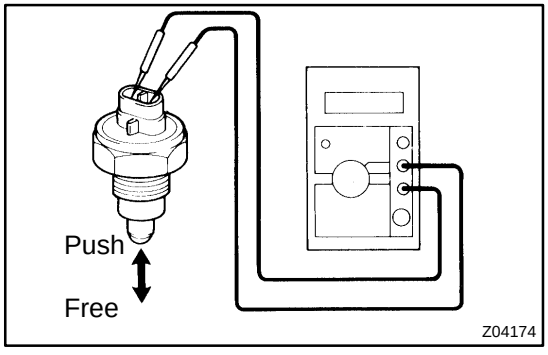

(c) Inspect the Diff. lock indicator switch.

(1) Check that there is continuity exists between terminals when the switch is pushed (differential locked position).

(2) Check continuity doesn't exist when the switch is free (differential unlocked position).

HINT:

If operation is not as specified, replace the switch.

(d) Inspect the transfer L4 switch (See page TR–13).

(e) Inspect the vehicle speed sensor (See page BE–39).

SA0BW–01

INSTALLATION

INSTALL DIFF. LOCK ACTUATOR (See page SA–185)

DIFFERENTIAL LOCKING SYSTEM

SA0BT–04

LOCATION

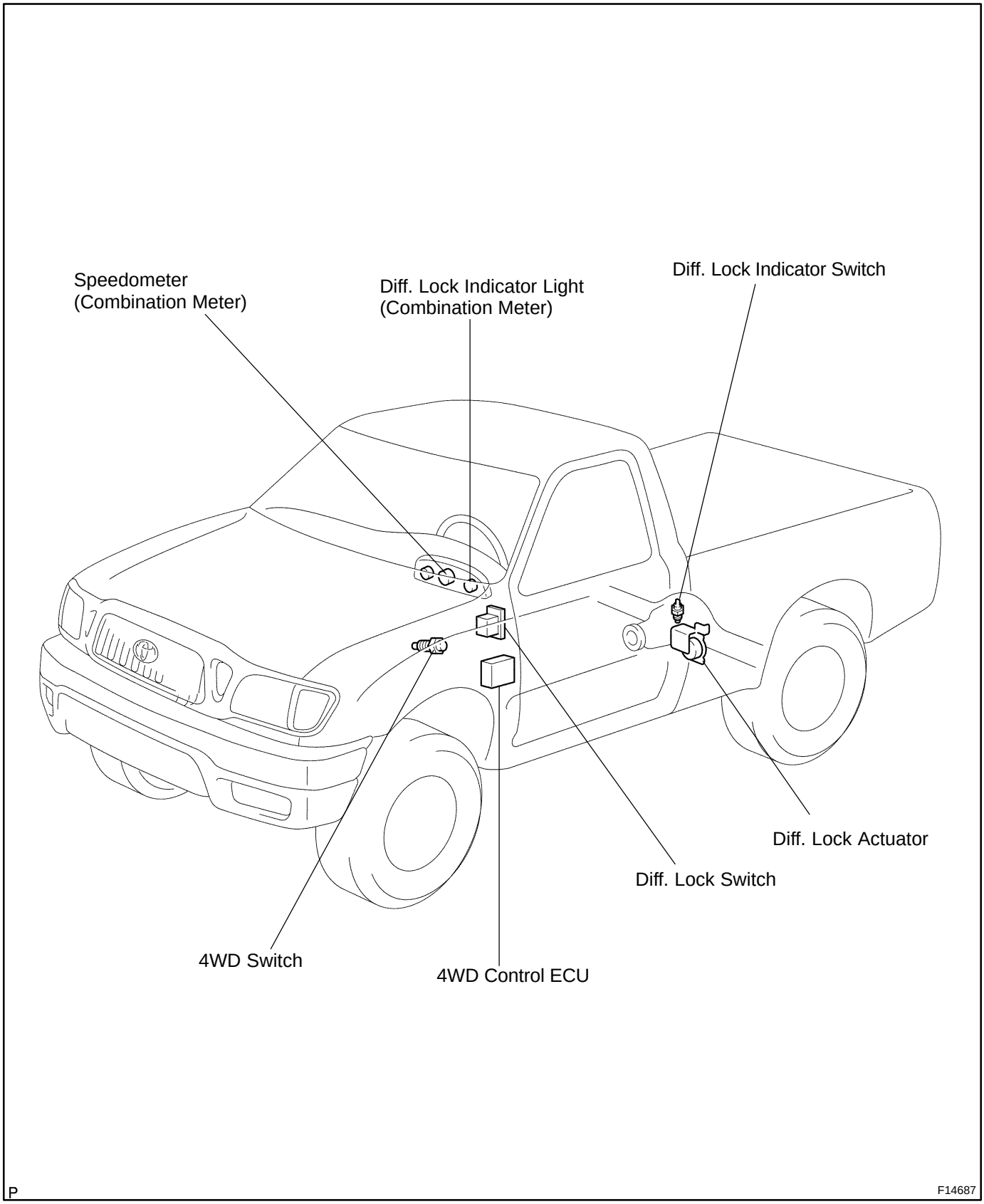

SA0BU–01

REMOVAL

REMOVE DIFF. LOCK ACTUATOR (See page SA–179)

FRONT AXLE HUB (2WD)

COMPONENTS

SA094–03

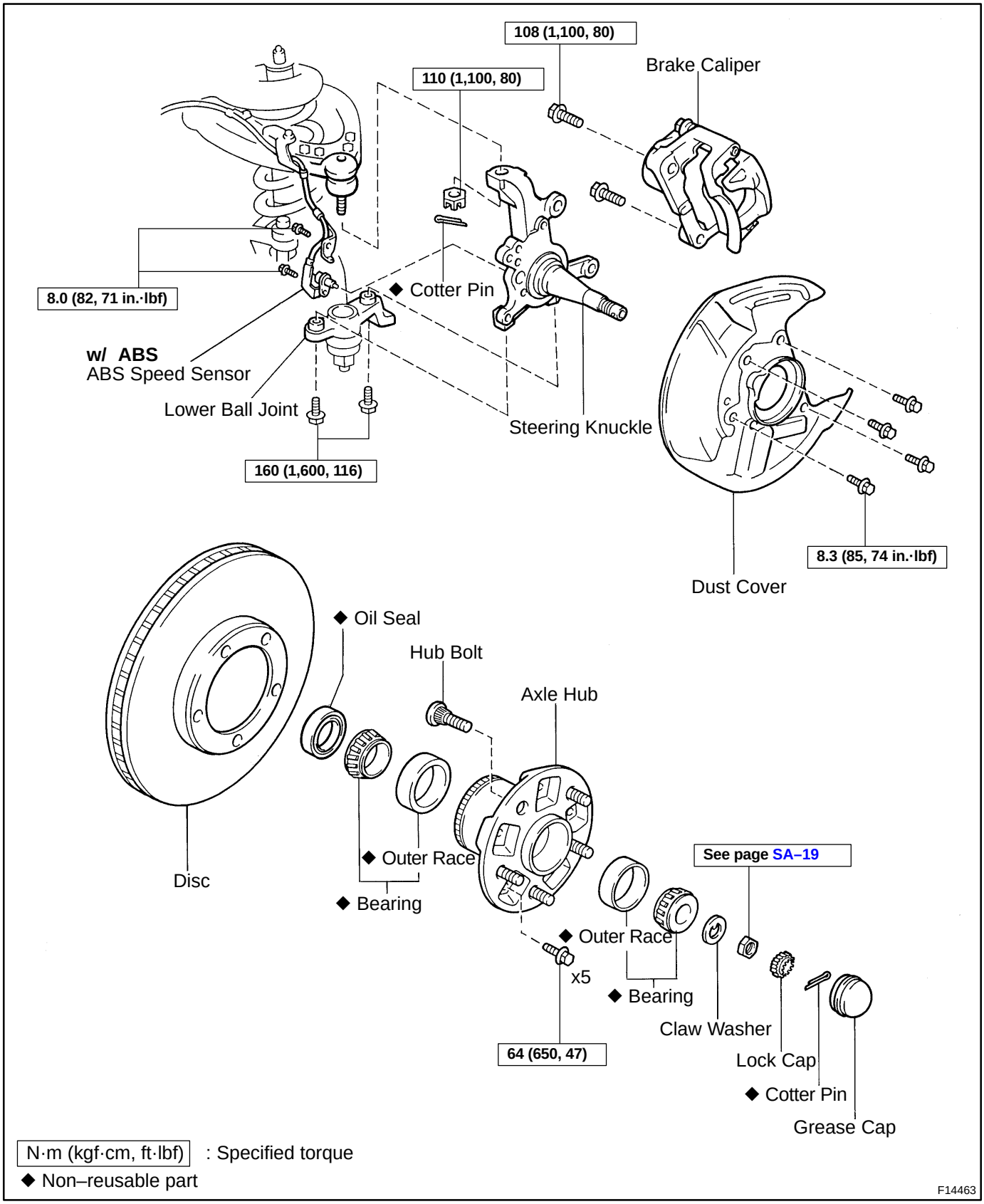

SA096–03

DISASSEMBLY

1. CHECK HUB BEARINGS

Clean the bearings and outer races and inspect them for wear or damage.

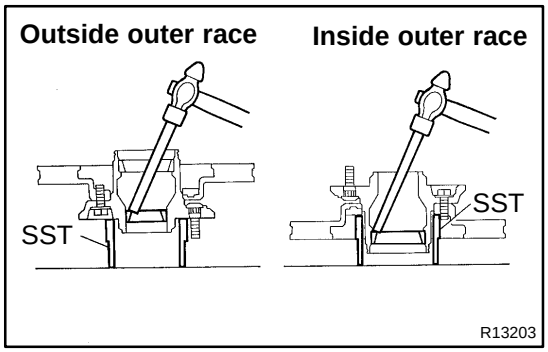

2. REMOVE BEARING OUTER RACES

Using SST, a brass bar and hammer, remove the inside and outside of the bearing outer races.

SST 09527–17011

NOTICE:

Be careful not to damage the ABS speed sensor rotor.

SA1G1–02

INSTALLATION

1. INSTALL STEERING KNUCKLE

(a) Support the lower suspension arm with a jack.

(b) Place the steering knuckle to the lower ball joint and temporarily install the 2 bolts.

(c) Push down the upper suspension arm and connect the upper ball joint to the steering knuckle and install the nut.

Torque: 110 N·m (1,100 kgf·cm, 80 ft·lbf)

(d) Install a new cotter pin.

If the holes for the cotter pin are not aligned, tighten the nut further up to 60°.

(e) Torque the 2 lower ball joint bolts.

Torque: 160 N·m (1,600 kgf·cm, 116 ft·lbf)

2. INSTALL DUST COVER

Install the dust cover with the 4 bolts.

Torque: 8.3 N·m (85 kgf·cm, 74 in.·lbf)

3. INSTALL STABILIZER BAR LINK

Install the bolt, 5 retainers, collar, 4 cushions and a new nut.

4. PACK BEARINGS WITH MP GREASE

(a) Place MP grease in the your palm.

(b) Pack grease into the bearing, continuing until the grease oozes out from the other side.

(c) Employ the same manner around the bearing circumference.

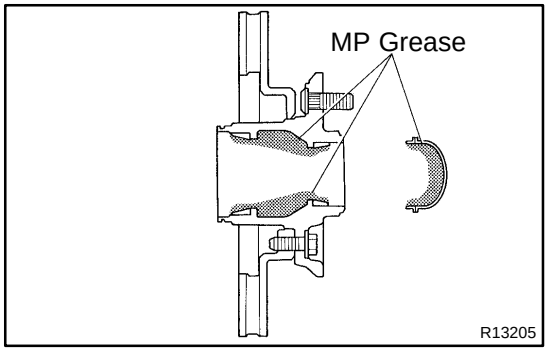

5. COAT INSIDE OF HUB AND CAP WITH MP GREASE

6. INSTALL INNER BEARING AND OIL SEAL

(a) Place inner bearing into the axle hub.

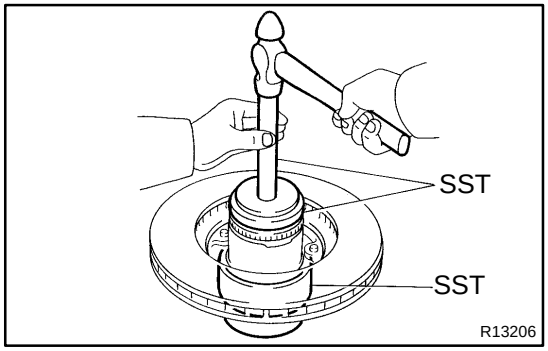

(b) Using SST and a hammer, install a new oil seal into the axle hub.

SST 09527–17011, 09950–60020 (09951–00710), 09950–70010 (09951–07150)

NOTICE:

Be careful not to damage the ABS speed sensor rotor.

(c) Coat the oil seal lip with MP grease.

7. INSTALL AXLE HUB WITH DISC

(a) Place the axle hub on the spindle.

(b) Install a new outer bearing and claw washer.

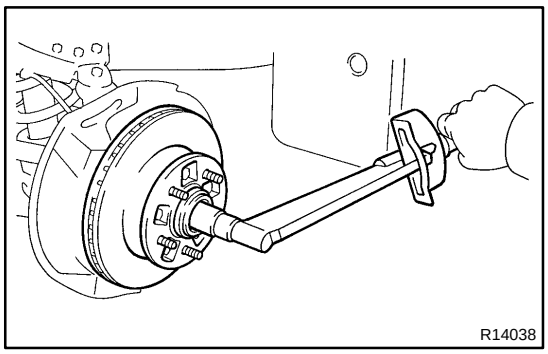

8. ADJUST PRELOAD

(a) Install and torque the nut.
Torque: 34 N·m (350 kgf·cm, 25 ft·lbf)

(b) Turn the hub several times to make the bearing more smoothly.

(c) Loosen the nut until it can be turned by hand.

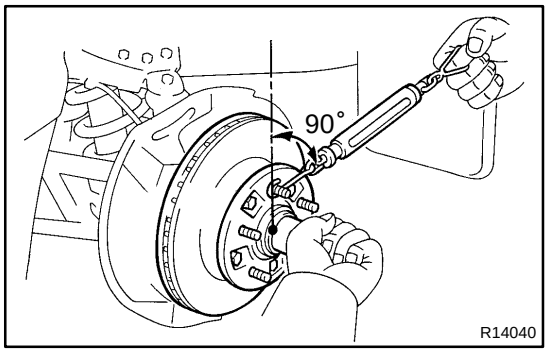

(d) Using a spring tension gauge, measure and make a note down of the frictional force of the oil seal.

HINT:
Make sure to check preload in the direction of rotation.

(e) Tighten the nut until the preload is within the specified value.
Preload (at starting):
Frictional force plus 6 – 18 N (0.6 – 1.8 kgf, 1.3 – 4.0 lbf)

HINT:
Make sure to check preload in the direction of rotation.

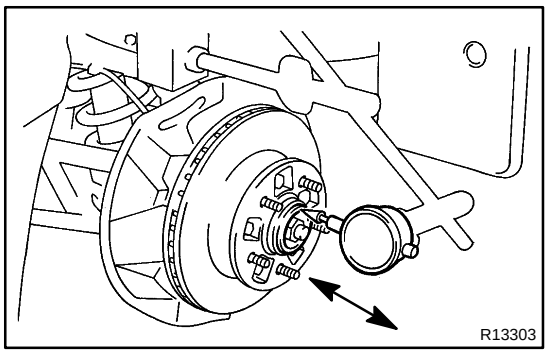

(f) Using a dial indicator near the center of the axle hub and measure the backlash in the bearing shaft direction.
Maximum: 0.05 mm (0.0020 in.) or less

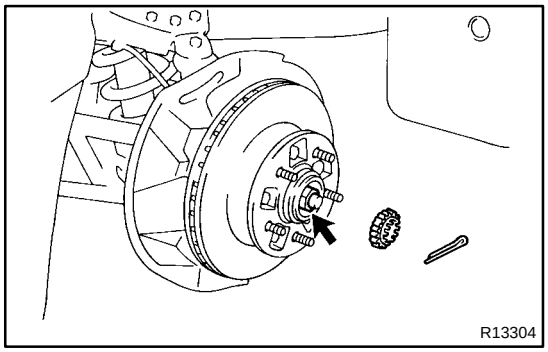

9. INSTALL LOCK CAP, COTTER PIN AND GREASE CAP

(a) Install the lock cap and a new cotter pin.

If the holes for the cotter pin are not aligned, tighten the nut further up to 60°.

(b) Install the grease cap.

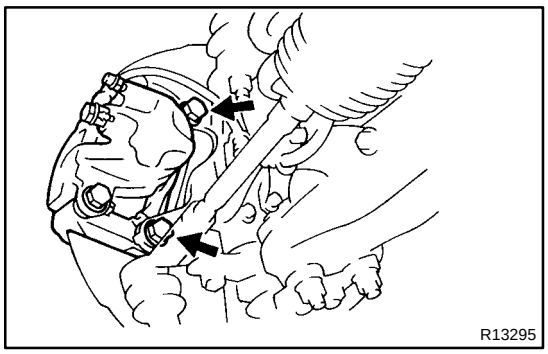

10. INSTALL BRAKE CALIPER

Install the brake caliper with the 2 bolts.

Torque: 108 N·m (1,100 kgf·cm, 80 ft·lbf)

11. w/ ABS:

CONNECT ABS SPEED SENSOR AND WIRE HARNESS CLAMP TO STEERING KNUCKLE

Connect the ABS speed sensor and wire harness clamp with the 2 bolts.

Torque: 8.0 N·m (82 kgf·cm, 71 in.·lbf)

12. INSTALL FRONT WHEEL

Torque: 110 N·m (1,150 kgf·cm, 83 ft·lbf)

13. DEPRESS BRAKE PEDAL SEVERAL TIMES

14. CHECK FRONT WHEEL ALIGNMENT (See page SA–6)

15. w/ ABS:

CHECK ABS SPEED SENSOR SIGNAL (See page DI–534)

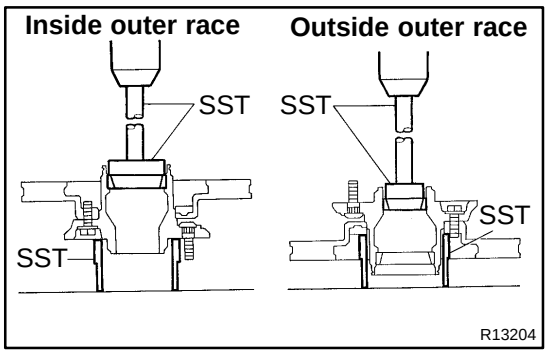

SA097–03

REASSEMBLY

INSTALL NEW BEARING OUTER RACES

(a) Using SST and a press, install a new inside of the bearing outer race.

SST 09527–17011, 09950–60010 (09951–00640), 09950–70010 (09951–07150)

(b) Using SST and a press, install a new outside of the bearing race.

SST 09527–17011, 09950–60010 (09951–00490), 09950–70010 (09951–07150)

NOTICE:

Be careful not to damage the ABS speed sensor rotor.

SA1G0–01

REMOVAL

1. REMOVE FRONT WHEEL

2. w/ ABS:

DISCONNECT ABS SPEED SENSOR AND WIRE HARNESS CLAMP FROM STEERING KNUCKLE

Remove the 2 bolts and disconnect the ABS speed sensor and wire harness clamp from the steering knuckle.

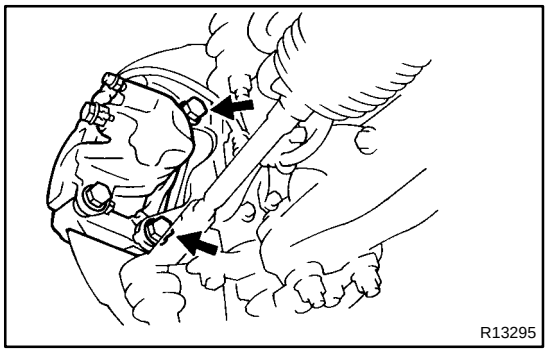

3. DISCONNECT BRAKE CALIPER

(a) Remove the 2 bolts and brake caliper.

(b) Support the brake caliper securely.

4. CHECK AXLE HUB BEARING BACKLASH

(a) Using a screwdriver, remove the grease cap.

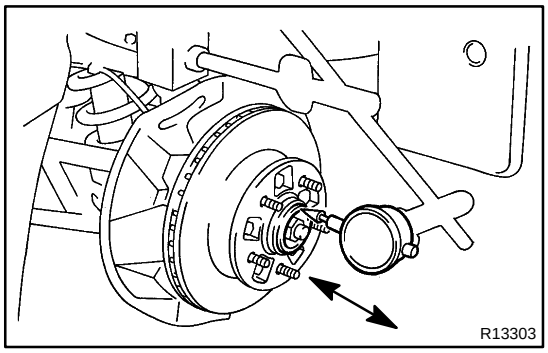

(b) Using a dial indicator near the center of the axle hub and check the backlash in the bearing shaft direction.

Maximum: 0.05 mm (0.0020 in.)

If the backlash exceeds the maximum, replace the axle hub bearing.

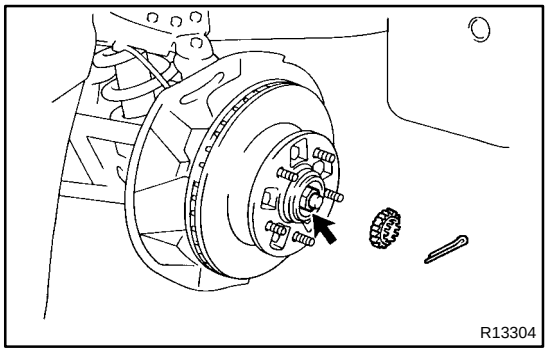

5. REMOVE AXLE HUB WITH DISC

(a) Remove the cotter pin and lock cap.

(b) Using a 30 mm socket wrench, remove the nut.

(c) Remove the claw washer, outer bearing and axle hub with the disc from the steering knuckle.

NOTICE:

Be careful not to drop the outer bearing.

6. REMOVE OIL SEAL AND INNER BEARING

(a) Using a screwdriver, pry out the oil seal.

NOTICE:

Be careful not to damage the ABS speed sensor rotor.

(b) Remove the inner bearing from the axle hub.

7. REMOVE DUST COVER

Remove the 4 bolts and dust cover.

8. REMOVE STABILIZER BAR LINK

Hold the bolt with a wrench, then remove the nut, 5 retainers, collar, 4 cushions and bolt.

9. REMOVE STEERING KNUCKLE

(a) Support the lower suspension arm with a jack.

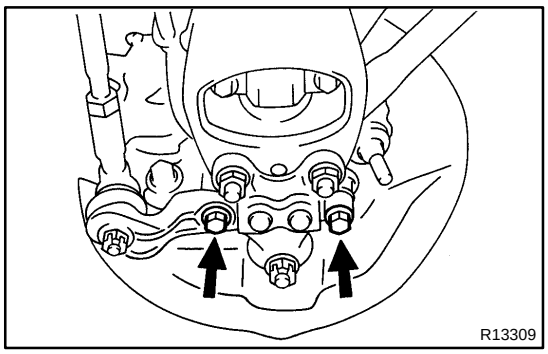

(b) Loosen the 2 lower ball joint set bolts.
(c) Remove the cotter pin and loosen the nut.

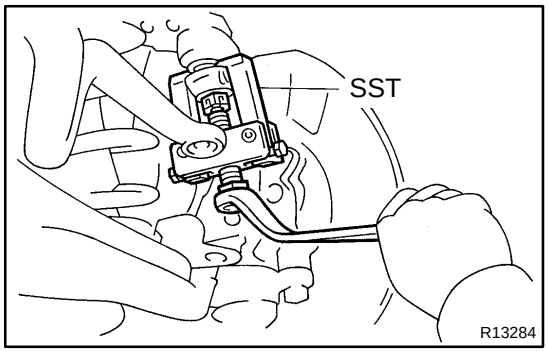

(d) Using SST, disconnect the steering knuckle from the upper ball joint.
SST 09628–62011
(e) Remove the 2 lower ball joint set bolts.
(f) Remove the nut and steering knuckle.

NOTICE:

Do not remove the jack.

FRONT AXLE HUB (4WD and PRE RUNNER)

SA1G2–02

COMPONENTS

HINT:

Pre runner is the model described below.

RZN191L–TRPDKAB, RZN196L–CRPDKAB, RZN196L–PRPDKAB, VZN195L–CRPDKAB, VZN195L–PRPDKAB

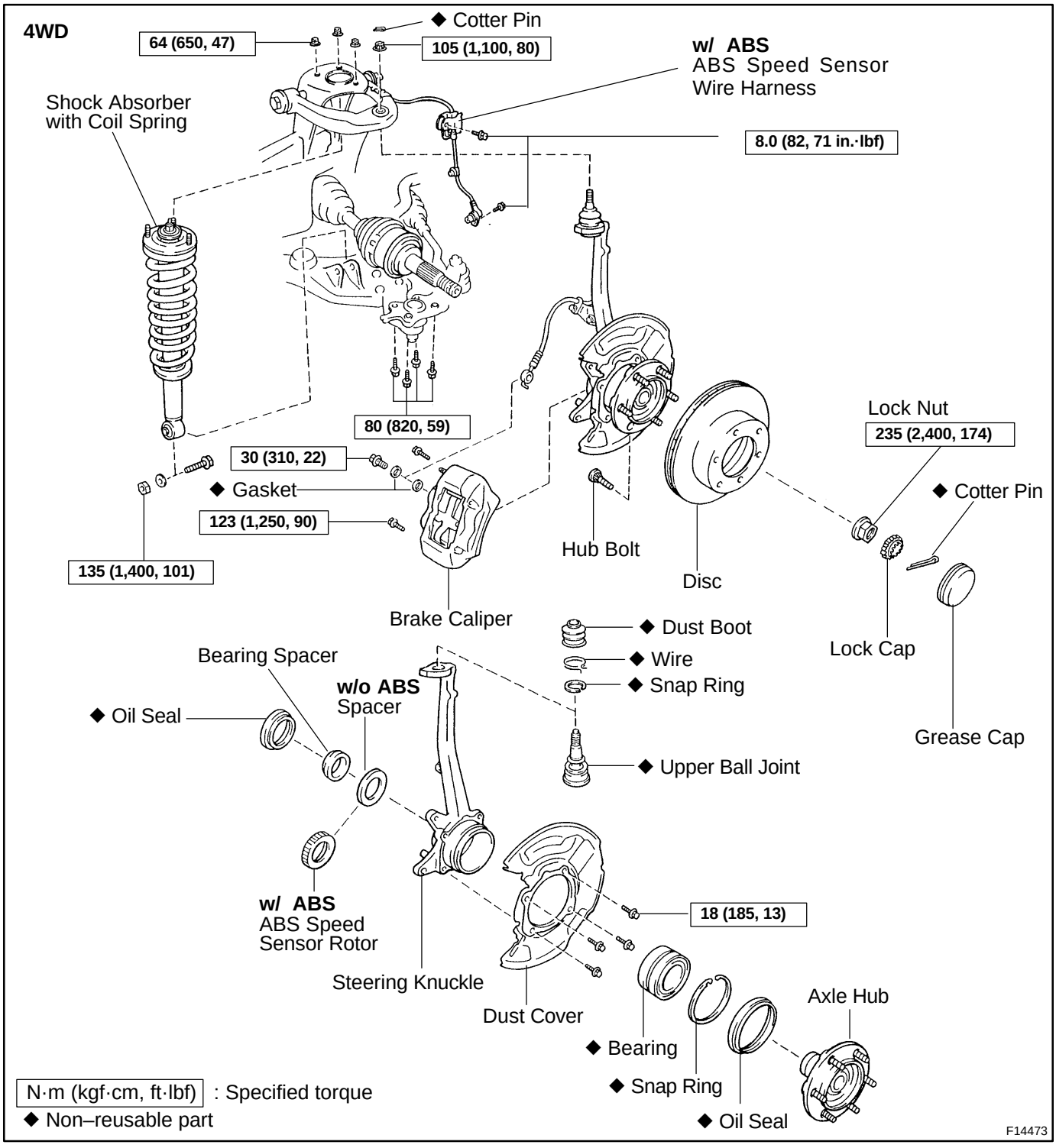

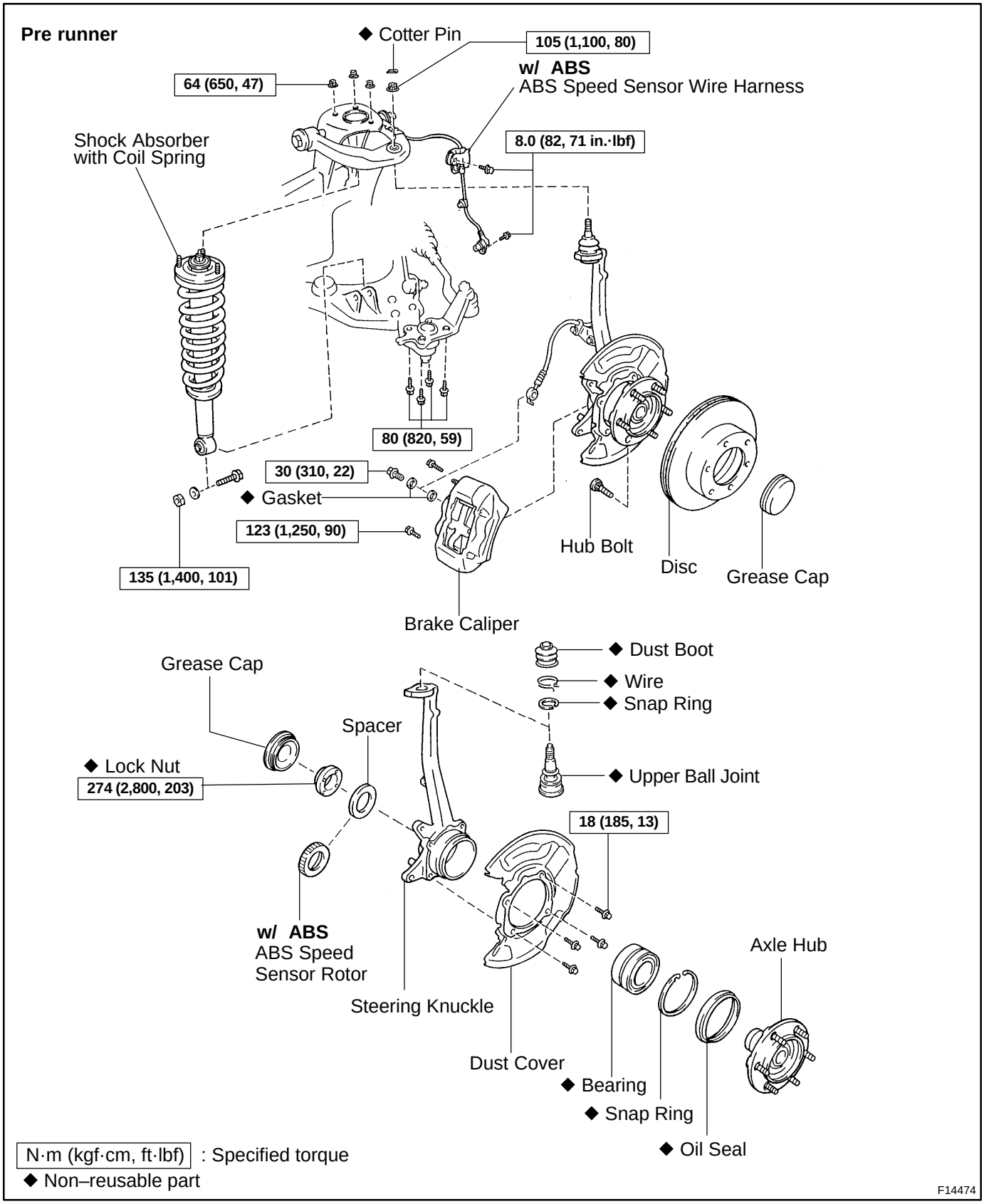
Pre runner
◆ Cotter Pin
105 (1,100, 80)
64 (650, 47)
w/ ABS
ABS Speed Sensor Wire Harness
Shock Absorber with Coil Spring
8.0 (82, 71 in.·lbf)
80 (820, 59)
30 (310, 22)
◆ Gasket
123 (1,250, 90)
135 (1,400, 101)
Hub Bolt
Disc
Grease Cap
Brake Caliper
Grease Cap
◆ Dust Boot
◆ Wire
◆ Snap Ring
Spacer
◆ Lock Nut
274 (2,800, 203)
◆ Upper Ball Joint
18 (185, 13)
w/ ABS
ABS Speed Sensor Rotor
Axle Hub
Steering Knuckle
Dust Cover
◆ Bearing
◆ Snap Ring
◆ Oil Seal
N·m (kgf·cm, ft·lbf) : Specified torque
◆ Non–reusable part
F14474

SA1G4–03

DISASSEMBLY

1. 4WD:

REMOVE OIL SEAL (INSIDE)

(a) Clamp the axle hub in a soft jaw vise.

HINT:

Close vise until it holds hub bolts. Do not tighten further.

(b) Using a screwdriver, remove the oil seal (inside).

2. Pre runner:

REMOVE GREASE CAP

(a) Clamp the axle hub in a soft jaw vise.

HINT:

Close vise until it holds hub bolts. Do not tighten further.

(b) Using a screwdriver, remove the grease cap.

3. Pre runner:

REMOVE LOCK NUT AND ABS SPEED SENSOR ROTOR/SPACER

(a) Using a chisel and hammer, loosen the staked part of the lock nut.

NOTICE:

Be careful not to damage the bushing.

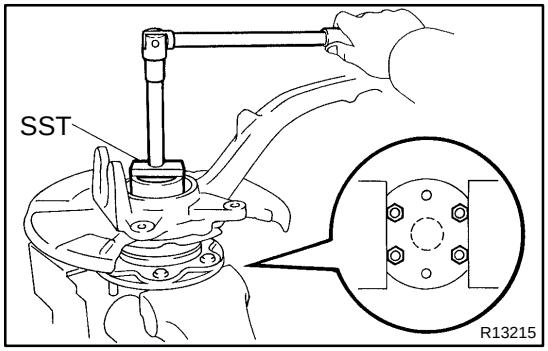

(b) Using SST, remove the lock nut.

SST 09318–12010

(c) Remove the ABS speed sensor rotor/spacer.

NOTICE:

Take care not to scratch the serration of the speed sensor rotor.

4. REMOVE AXLE HUB FROM STEERING KNUCKLE

(a) Remove the 4 bolts and shift the dust cover towards the hub side (outside).

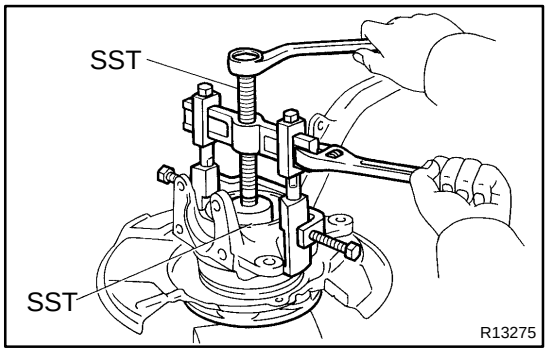

(b) Using SST, remove the axle hub from the steering knuckle.

SST 09710–30021 (09710–03051), 09950–40011 (09951–04020, 09952–04010, 09953–04020, 09954–04010, 09955–04031, 09957–04010, 09958–04011)

(c) Remove the dust cover from the steering knuckle.

(d) 4WD:

Remove the bearing spacer and ABS speed sensor rotor/spacer.

5. REMOVE OIL SEAL (OUTSIDE)

Using a screwdriver, remove the oil seal (outside) from the steering knuckle.

6. REMOVE BEARING FROM STEERING KNUCKLE

(a) Using snap ring pliers, remove the snap ring.

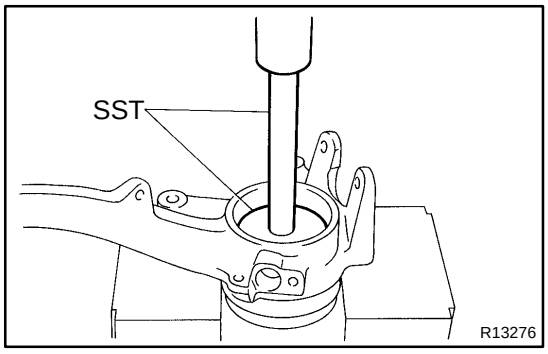

(b) Using SST and a press, remove the bearing from the steering knuckle.

SST 09950–60020 (09951–00810), 09950–70010 (09951–07150)

SA1G6–01

INSTALLATION

Installation is in the reverse order of removal (See page SA–24).

HINT:

After installation, bleed the brake system (See page BR–4), check the front wheel alignment (See page SA–10) and ABS speed sensor signal (See page DI–534).

SA1G5–02

REASSEMBLY

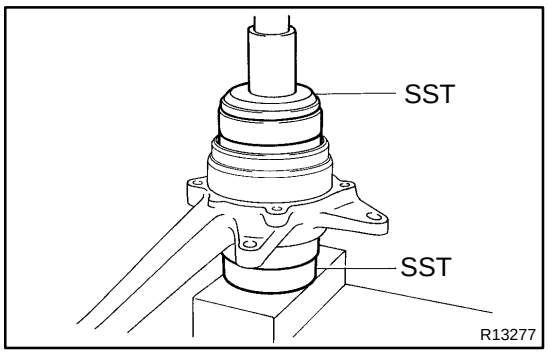

1. INSTALL NEW BEARING

(a) Using SST and a press, install a new bearing to the steering knuckle.
SST 09527–17011, 09950–60020 (09951–00910)

(b) Using snap ring pliers, install a snap ring.

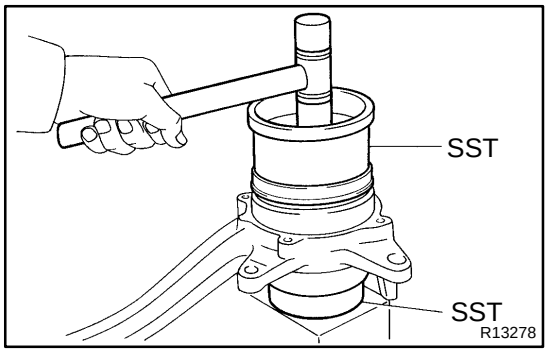

2. INSTALL NEW OIL SEAL (OUTSIDE)

(a) Using SST and a plastic hammer, install a new oil seal (outside).
SST 09223–15030, 09527–17011

(b) Coat the oil seal lip with MP grease.

3. INSTALL AXLE HUB TO STEERING KNUCKLE

(a) Install the dust cover to the steering knuckle with the 4 bolts.
Torque: 18 N·m (185 kgf·cm, 13 ft·lbf)

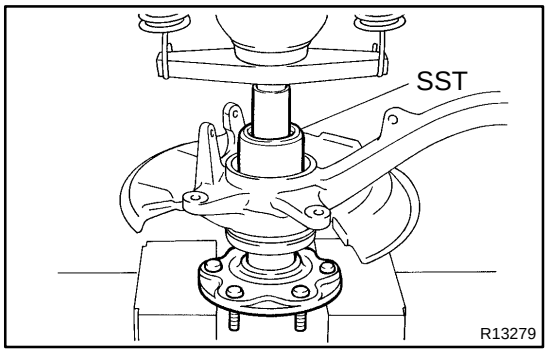

(b) Using SST and a press, install the axle hub to the steering knuckle.
SST 09649–17010

4. INSTALL ABS SPEED SENSOR ROTOR/SPACER

NOTICE:

Do not scratch the serration of the speed sensor rotor.

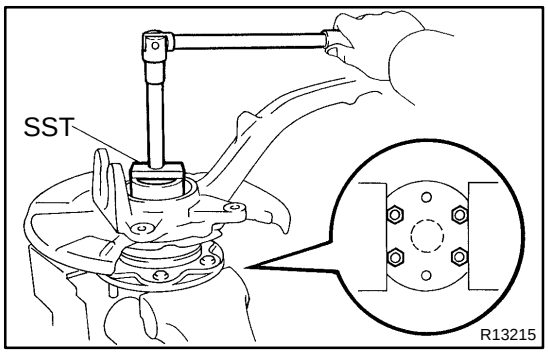

5. Pre runner:
INSTALL NEW LOCK NUT

(a) Using SST, install and torque a new lock nut to the axle hub.
SST 09318–12010
Torque: 274 N·m (2,800 kgf·cm, 203 ft·lbf)

(b) Using a chisel and hammer, stake the lock nut.

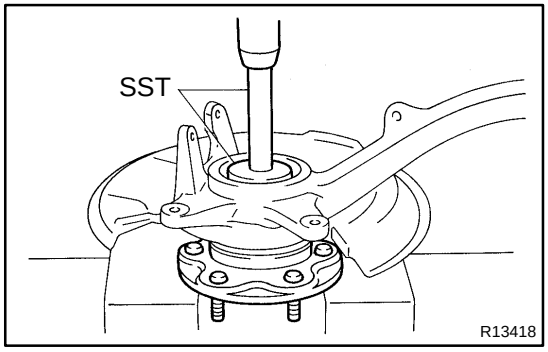

6. 4WD:
INSTALL BEARING SPACER

Using SST and a press, install the bearing spacer.
SST 09950–60010 (09951–00650),
09950–70010 (09951–07150)

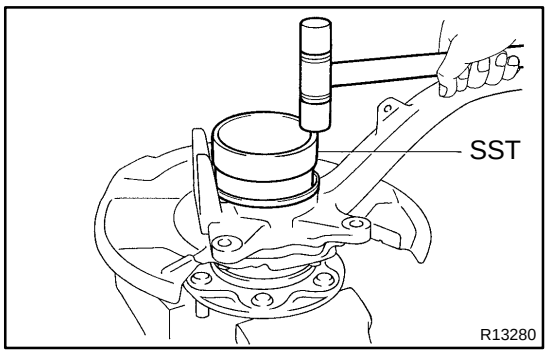

7. 4WD:
INSTALL NEW OIL SEAL (INSIDE)

(a) Using SST and a plastic hammer, install a new oil seal (inside).
SST 09527–17011

HINT:
Strike the SST on its circumference evenly.

(b) Coat the oil seal lip with MP grease.

8. Pre runner:
INSTALL GREASE CAP

SA22Q–01

REMOVAL

1. REMOVE FRONT WHEEL

Torque: 110 N·m (1,150 kgf·cm, 83 ft·lbf)

2. REMOVE SHOCK ABSORBER (See page SA–76)

3. 4WD:

DISCONNECT DRIVE SHAFT

(a) Using a screwdriver, remove the grease cap.

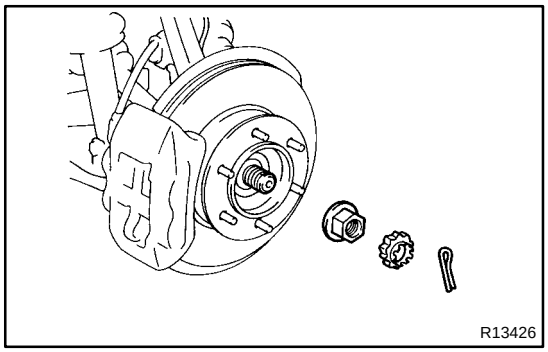
R13426

(b) Remove the cotter pin and lock cap.

HINT:

At the time of installation, if the holes for the cotter pin are not aligned, tighten the nut further up to 60°.

(c) With applying the brakes, remove the lock nut.

Torque: 235 N·m (2,400 kgf·cm, 174 ft·lbf)

4. w/ ABS:

DISCONNECT ABS SPEED SENSOR AND WIRE HARNESS CLAMP FROM STEERING KNUCKLE

Remove the 2 bolts and ABS speed sensor wire harness clamp from the steering knuckle.

Torque: 8.0 N·m (82 kgf·cm, 71 in.·lbf)

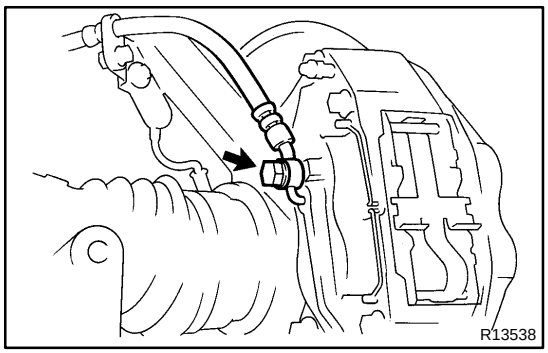
R13538

5. REMOVE BRAKE CALIPER AND DISC

(a) Remove the union bolt and 2 gaskets from the caliper, then disconnect the flexible hose from the caliper.

Torque: 30 N·m (310 kgf·cm, 22 ft·lbf)

HINT:

At the time of installation, install the flexible hose lock securely in the lock hole in the caliper.

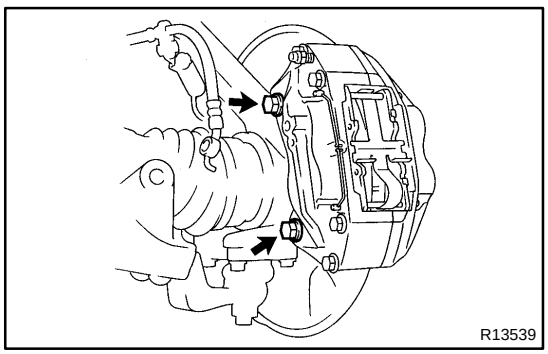
R13539

(b) Remove the 2 bolts, brake caliper and disc.

Torque: 123 N·m (1,250 kgf·cm, 90 ft·lbf)

(c) Support the brake caliper securely.

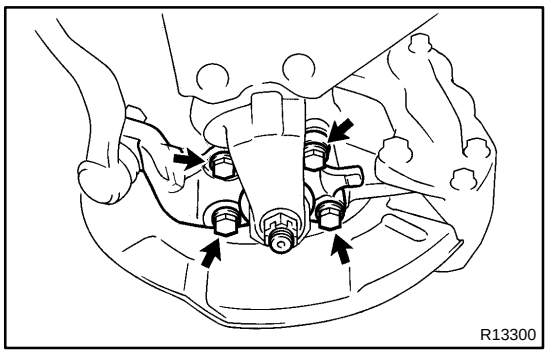

6. DISCONNECT LOWER BALL JOINT

Remove the 4 bolts and disconnect the lower ball joint.

Torque: 80 N·m (820 kgf·cm, 59 ft·lbf)

7. REMOVE STEERING KNUCKLE

(a) Remove the cotter pin and loosen the nut.

Torque: 105 N·m (1,100 kgf·cm, 80 ft·lbf)

HINT:

At the time of installation, if the holes for the cotter pin are not aligned, tighten the nut further up to 60°.

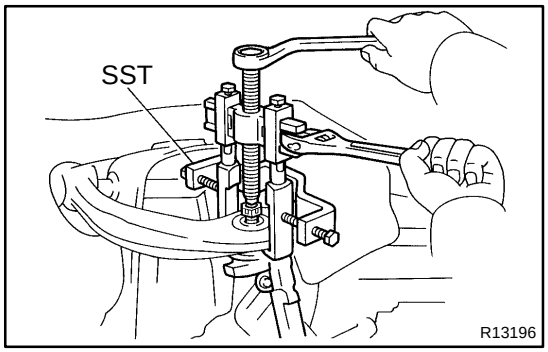

(b) Using SST, disconnect the steering knuckle.

SST 09950–40011 (09951–04010, 09952–04010, 09553–04020, 09554–04010, 09955–04031, 09958–04011)

(c) Remove the nut and steering knuckle.

NOTICE:

4WD:

Be careful not to damage the oil seal and drive shaft boot.

HINT:

4WD:

When it is difficult to disconnect the drive shaft, tap the tip of the drive shaft with a plastic hammer.

FRONT DIFFERENTIAL CARRIER (4WD)

SA09N–04

COMPONENTS

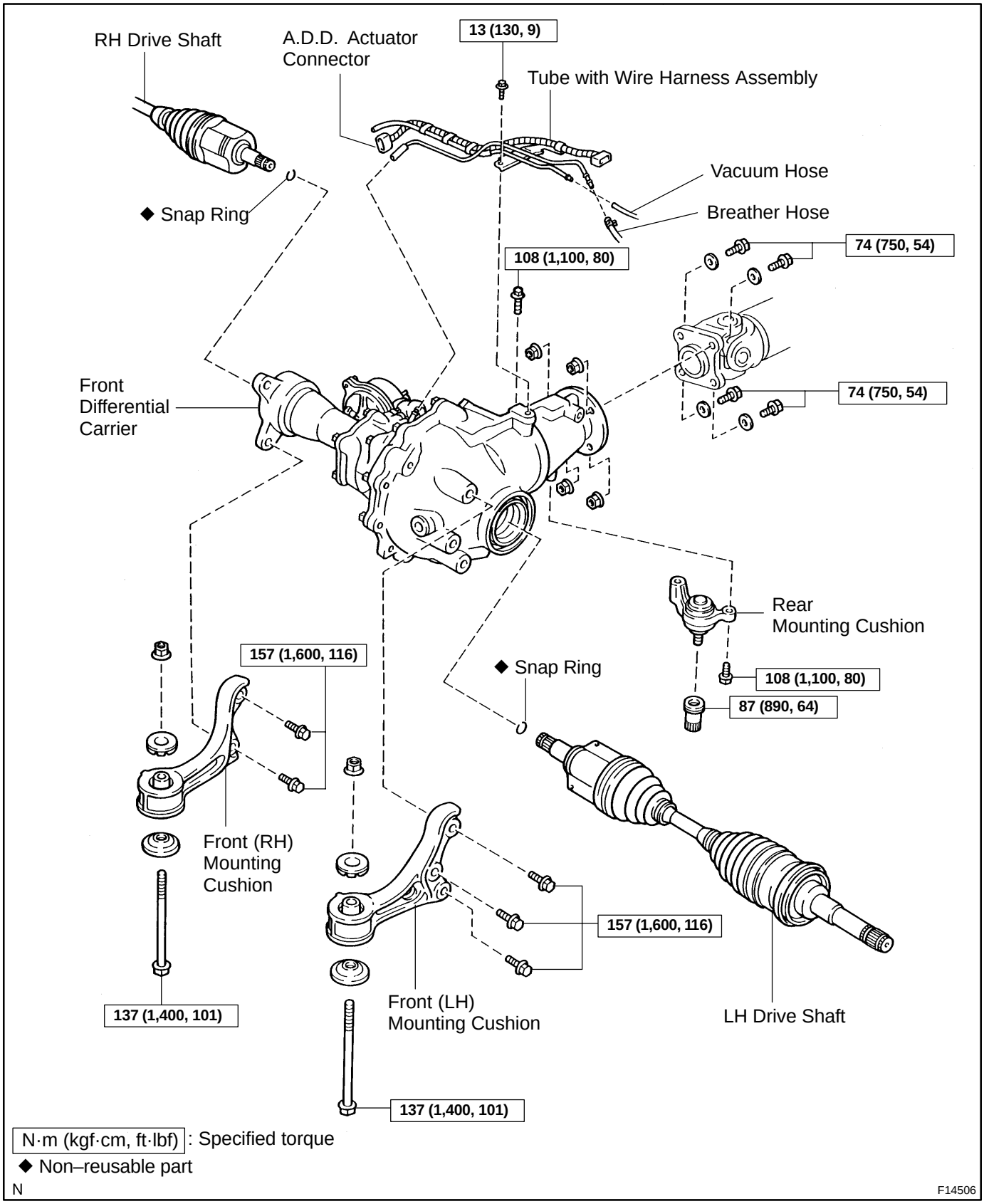

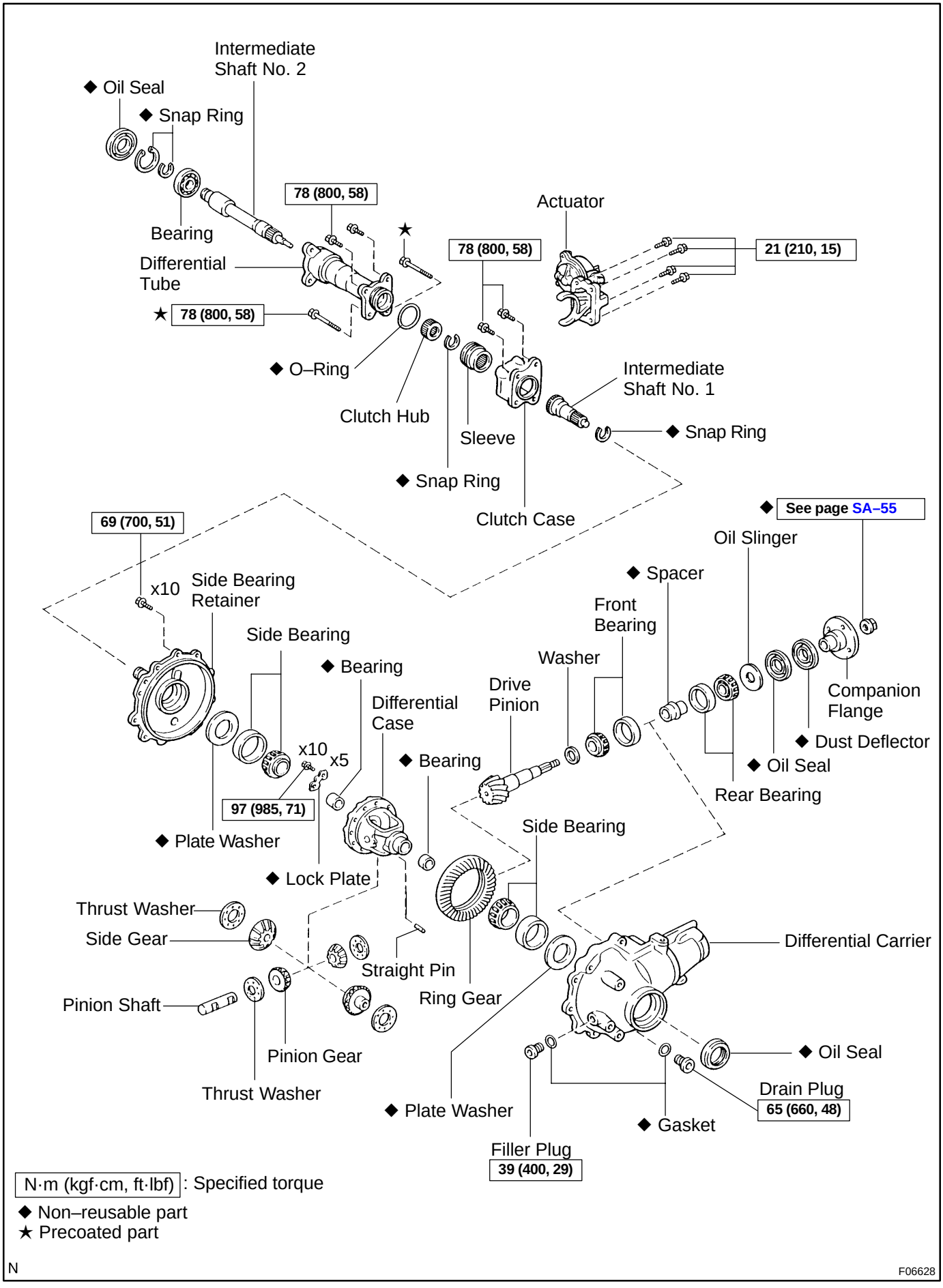
Intermediate Shaft No. 2
◆ Oil Seal
◆ Snap Ring
Bearing
78 (800, 58)
Actuator
21 (210, 15)
Differential Tube
★ 78 (800, 58)
◆ O–Ring
Clutch Hub
Sleeve
Intermediate Shaft No. 1
◆ Snap Ring
◆ Snap Ring
Clutch Case
◆ See page SA–55
69 (700, 51)
x10
Side Bearing Retainer
Side Bearing
◆ Bearing
Differential Case
x10
x5
97 (985, 71)
◆ Plate Washer
◆ Lock Plate
Oil Slinger
◆ Spacer
Front Bearing
Washer
Drive Pinion
Companion Flange
◆ Dust Deflector
◆ Oil Seal
Rear Bearing
◆ Bearing
Side Bearing
Thrust Washer
Side Gear
Straight Pin
Ring Gear
Differential Carrier
Pinion Shaft
Pinion Gear
Thrust Washer
◆ Plate Washer
◆ Oil Seal
Drain Plug
65 (660, 48)
◆ Gasket
Filler Plug
39 (400, 29)
N·m (kgf·cm, ft·lbf) : Specified torque
◆ Non–reusable part
★ Precoated part
N
F06628

SA09P–08

DISASSEMBLY

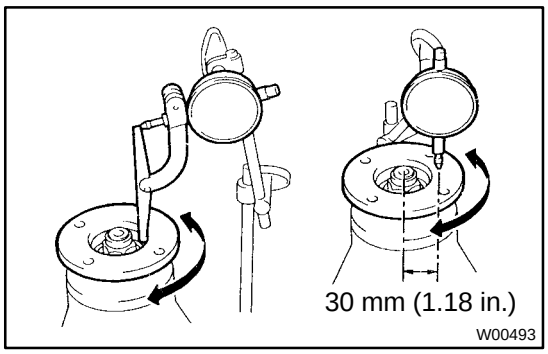

1. CHECK COMPANION FLANGE RUNOUT

Using a dial indicator, measure the vertical and lateral runout of the companion flange.

Maximum runout: 0.10 mm (0.0039 in.)

If the runout exceeds the maximum, replace the companion flange.

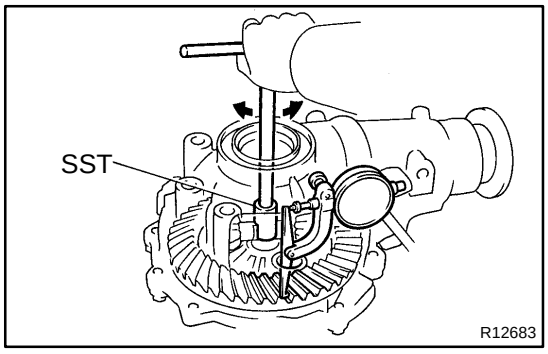

2. CHECK RING GEAR BACKLASH

Using SST and a dial indicator, measure the ring gear backlash.

SST 09564–32011

Backlash: 0.13 – 0.18 mm (0.0051 – 0.0071 in.)

HINT:

Measure at 3 or more points on the circumference of the ring gear.

If the backlash is not within the specified value, adjust the side bearing preload or repair as necessary.

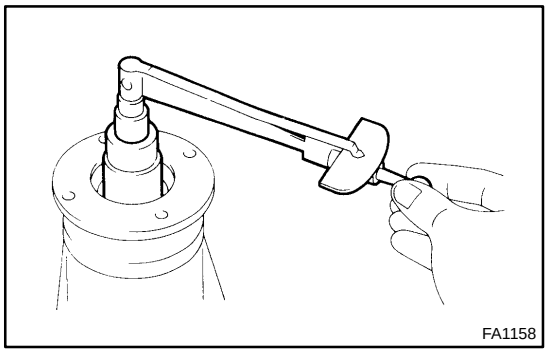

3. MEASURE DRIVE PINION PRELOAD

Using a torque wrench, measure the preload using the backlash between the drive pinion and ring gear.

Preload (at starting):
0.6 – 1.0 N·m (6 – 10 kgf·cm, 5.2 – 8.7 in.·lbf)

4. CHECK TOTAL PRELOAD

Using a torque wrench, measure the total preload with the teeth of the drive pinion and ring gear in contact.

Total preload (at starting):
Drive pinion preload plus 0.4 – 0.6 N·m (4 – 6 kgf·cm, 3.5 – 5.2 in.·lbf)

If necessary, disassemble and inspect the differential.

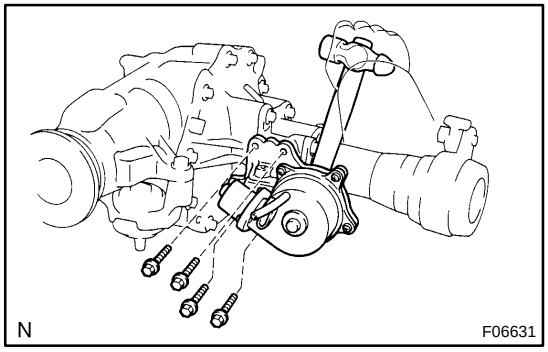

5. REMOVE A.D.D. ACTUATOR

(a) Remove the 4 bolts.

(b) Using a hammer handle, remove the actuator.

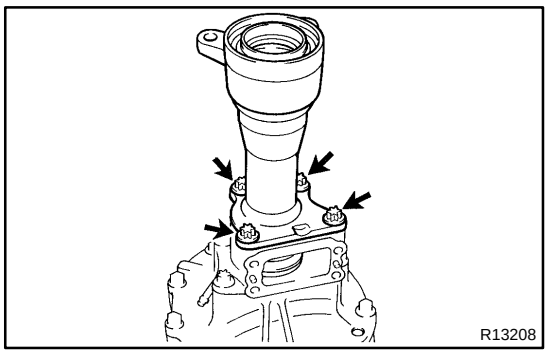

6. REMOVE DIFFERENTIAL TUBE

(a) Using a torx socket (E14), remove the 4 torx bolts.

(b) Using a plastic hammer, tap on the differential tube to remove it.

(c) Remove the sleeve.

(d) Remove the O–ring from the differential tube.

7. REMOVE CLUTCH CASE

(a) Using a torx socket (E14), remove the 2 torx bolts.

(b) Using a plastic hammer, tap on the clutch case to remove it.

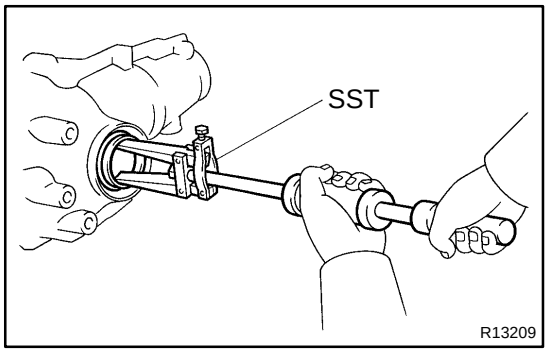

8. REMOVE SIDE OIL SEAL

Using SST, remove the side oil seal.

SST 09308–00010

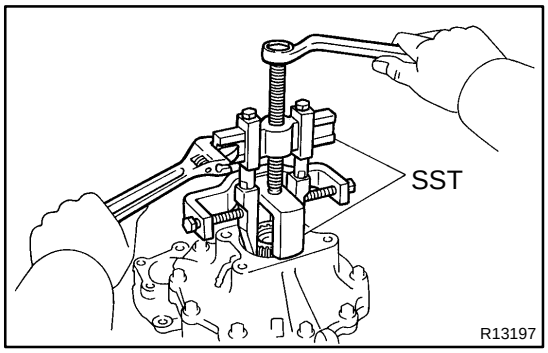

9. REMOVE INTERMEDIATE SHAFT NO. 1

(a) Using SST, remove the intermediate shaft No. 1.

SST 09350–20015 (09369–20040), 09950–40011 (09951–04010, 09952–04010, 09953–04020, 09954–04010, 09955–04011, 09957–04010, 09958–04011)

(b) Remove the snap ring.

10. REMOVE COMPANION FLANGE

(a) Using a chisel and hammer, unstake the nut.

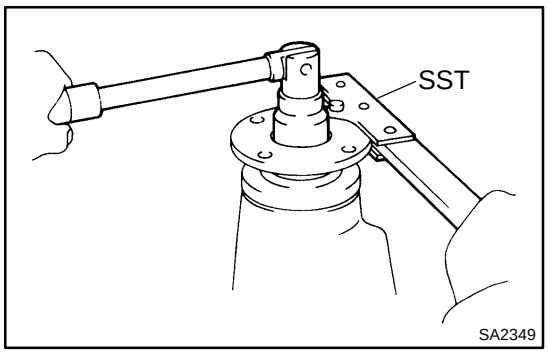

(b) Using SST to hold the flange, remove the nut.

SST 09330–00021

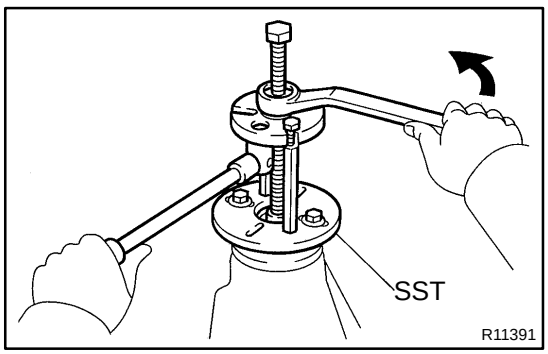

(c) Using SST, remove the companion flange.

SST 09950–30012 (09951–03010, 09953–03010, 09954–03010, 09955–03030, 09956–03020)

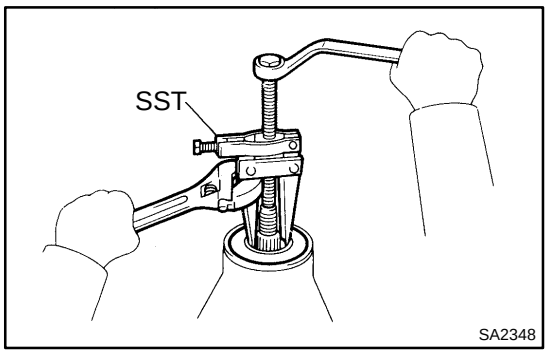

11. REMOVE OIL SEAL AND OIL SLINGER

(a) Using SST, remove the oil seal.
SST 09350–32014 (09308–10010)

(b) Remove the oil slinger.

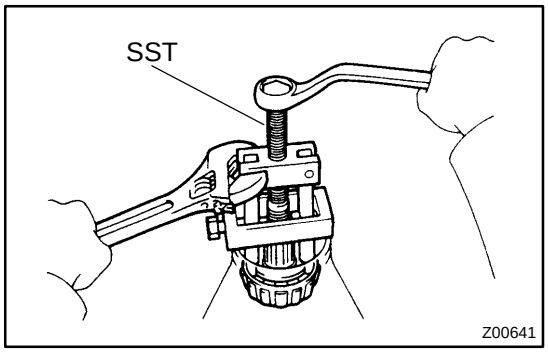

12. REMOVE REAR BEARING AND BEARING SPACER

(a) Using SST, remove the rear bearing from the drive pinion.
SST 09556–22010

(b) Remove the bearing spacer.

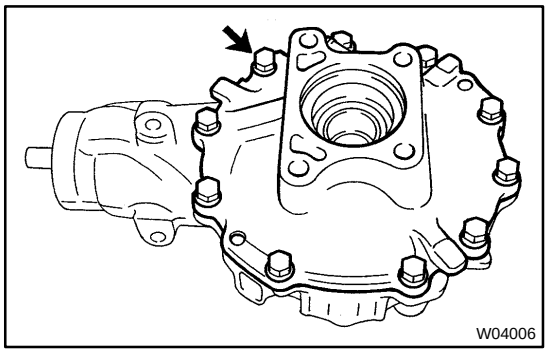

13. REMOVE SIDE BEARING RETAINER

Remove the 10 bolts and tap out the retainer with a plastic hammer.

14. REMOVE DIFFERENTIAL CASE ASSEMBLY

15. REMOVE DRIVE PINION FROM DIFFERENTIAL CARRIER

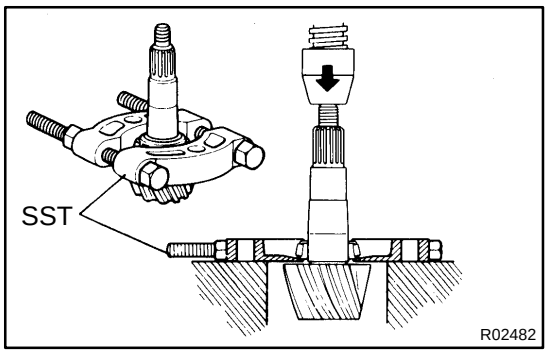

16. REMOVE DRIVE PINION FRONT BEARING

Using SST and a press, remove the bearing and washer from the drive pinion.
SST 09950–00020

HINT:
If the drive pinion or ring gear is damaged, replace them as a set.

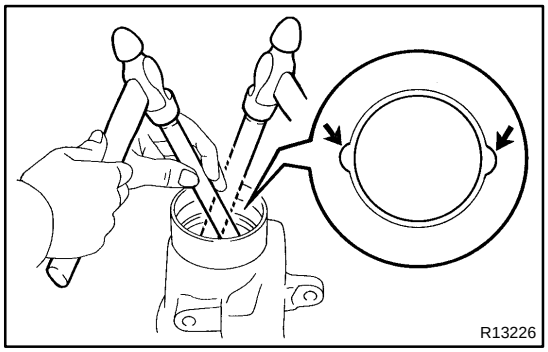

17. REMOVE DRIVE PINION BEARING OUTER RACES

(a) Using a brass bar and hammer, remove the front bearing outer race.

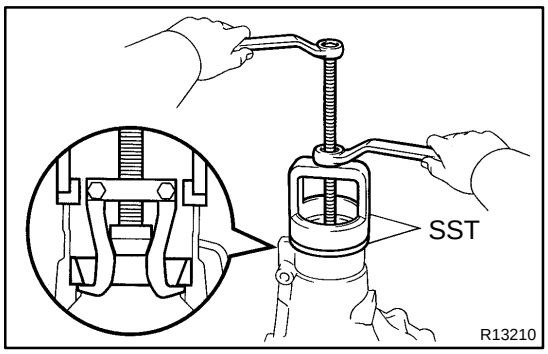

(b) Using SST, remove the rear bearing outer race.
SST 09502–12010, 09612–65014 (09612–01020, 09612–01050)

18. REMOVE SIDE BEARING OUTER RACES

HINT:

- Measure the plate washer thickness and note it down.
- Tag the bearing outer races to show the location for reassembling.

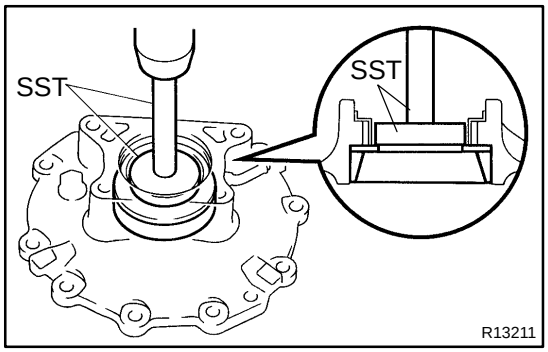

(a) Using SST and a press, remove the plate washer and outer race from the bearing retainer.
SST 09950–60010 (09951–00540), 09950–70010 (09951–07150)

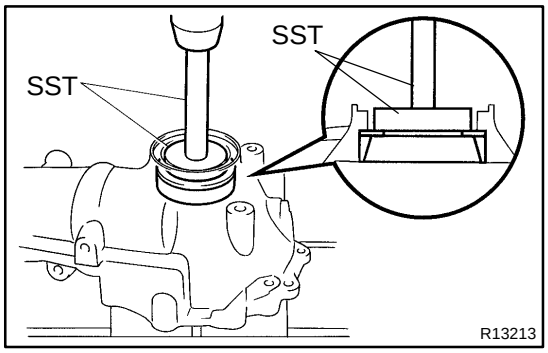

(b) Using SST and a press, remove the plate washer and outer race from the differential carrier.
SST 09950–60010 (09951–00650), 09950–70010 (09951–07150)

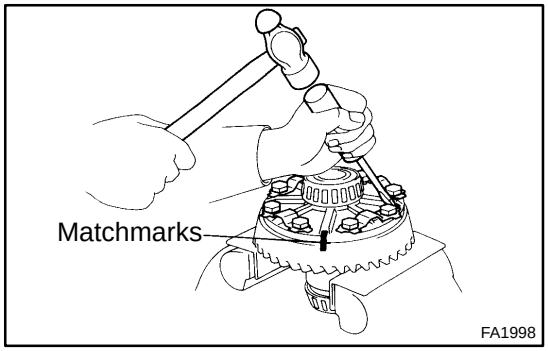

19. REMOVE RING GEAR

(a) Place matchmarks on the ring gear and differential case.
(b) Using a screwdriver and hammer, unstake the 5 lock plates.
(c) Remove the 10 bolts and 5 lock plates.
(d) Using a plastic hammer, tap on the ring gear to separate it from the differential case.

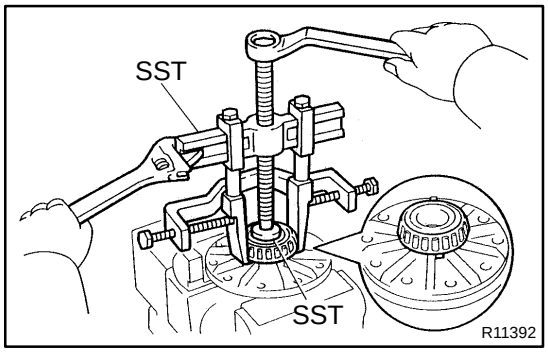

20. REMOVE SIDE BEARINGS

Using SST, remove the 2 side bearings from the differential case.
SST 09950–40011 (09951–04010, 09952–04010, 09953–04020, 09954–04010, 09955–04061, 09957–04010, 09958–04011), 09950–60010 (09951–00480)

HINT:

Fix the claws of SST to the notch in the differential case.

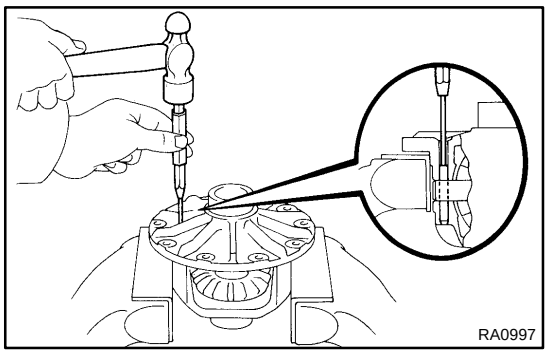

21. DISASSEMBLE DIFFERENTIAL CASE ASSEMBLY

(a) Using a pin punch and hammer, remove the straight pin.

(b) Remove the pinion shaft, 2 pinion gears, pinion gear thrust washers, side gears and side gear thrust washers from the differential case.

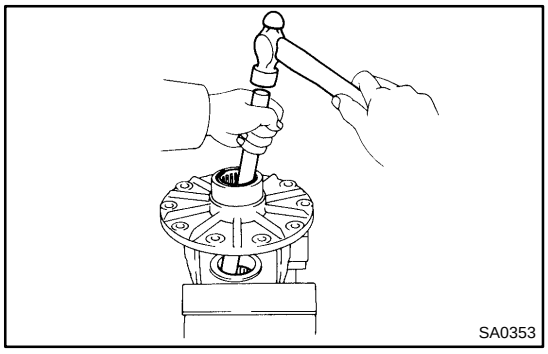

22. REMOVE BEARINGS

Using a brass bar and hammer, remove the 2 bearings.

SA09S–04

INSTALLATION

1. INSTALL DIFFERENTIAL MOUNTING CUSHIONS

(a) Install the 2 front mounting cushions with the 5 bolts.
Torque: 157 N·m (1,600 kgf·cm, 116 ft·lbf)

(b) Install the rear mounting cushion with the 2 bolts.
Torque: 108 N·m (1,100 kgf·cm, 80 ft·lbf)

2. INSTALL FRONT DIFFERENTIAL CARRIER

(a) Jack up the front differential.

(b) Install the 2 front mounting bolts.
Torque: 137 N·m (1,400 kgf·cm, 101 ft·lbf)

(c) Using a hexagon (12 mm) wrench, install the rear mounting nut.
Torque: 87 N·m (890 kgf·cm, 64 ft·lbf)

(d) Remove the jack.

3. INSTALL TUBE WITH WIRE HARNESS ASSEMBLY

(a) Install tube with wire harness assembly with the bolt.
Torque: 13 N·m (130 kgf·cm, 9 ft·lbf)

(b) Connect the actuator connector, vacuum hose and breather hose.

4. CONNECT FRONT PROPELLER SHAFT (See page PR–16)

5. INSTALL DRIVE SHAFTS (See page SA–40)

6. FILL DIFFERENTIAL WITH HYPOID GEAR OIL (See page SA–42)

SA09R–08

REASSEMBLY

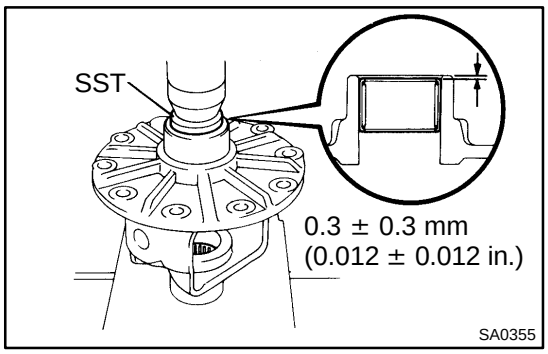

1. INSTALL NEW BEARINGS

Using SST and a press, install 2 new bearings.

SST 09950–60010 (09951–00380)

Bearing press in depth:
0.3 ± 0.3 mm (0.012 ± 0.012 in.)

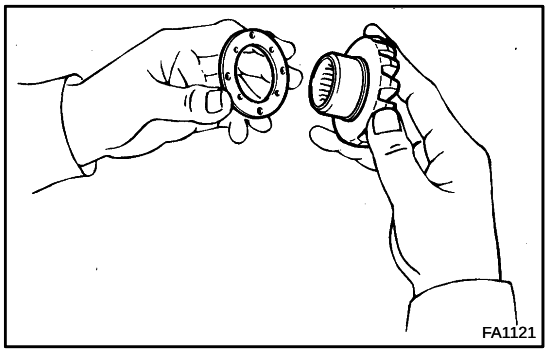

2. ASSEMBLE DIFFERENTIAL CASE

(a) Install the 2 thrust washers on the side gears.

(b) Install the 2 side gears, pinion gears, pinion gear thrust washers and pinion shaft in the differential case.

HINT:
Align the holes for the straight pin in the differential case and pinion shaft.

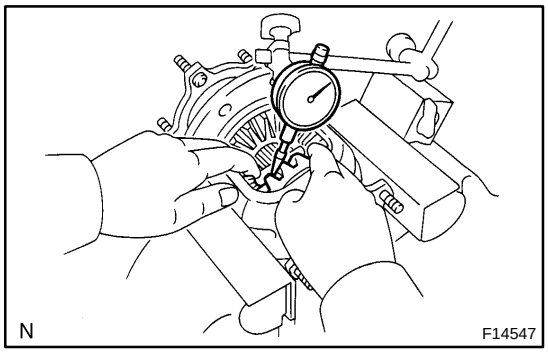

(c) Measure the side gear backlash.

(1) Install the 2 side gear shafts to the differential case.

(2) Using a dial indicator, measure the side gear backlash while holding one pinion gear toward the differential case.

Backlash: 0 – 0.20 mm (0 – 0.0079 in.)

If the backlash is not within the specified value, replace the side gear thrust washer with the one of an appropriate thickness.

HINT:
Refer to the following table to select thrust washers which will ensure that the backlash is within the specified value.

Washer thickness:

Thickness mm (in.)	Thickness mm (in.)
0.96 – 1.04 (0.0378 – 0.0409)	1.16 – 1.24 (0.0457 – 0.0488)
1.06 – 1.14 (0.0417 – 0.0449)	1.26 – 1.34 (0.0496 – 0.0528)

(3) Remove the 2 side gear shafts.

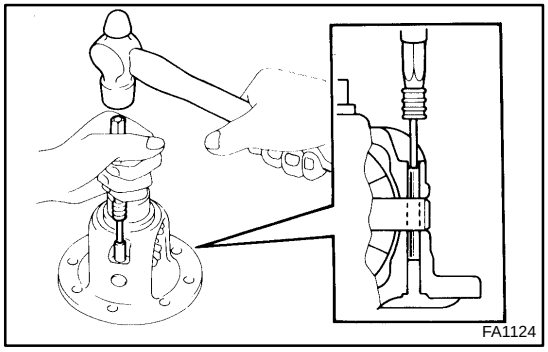

3. INSTALL STRAIGHT PIN AND STAKE DIFFERENTIAL CASE

(a) Using a pin punch and hammer, install the straight pin through the differential case and hole in the pinion shaft.

(b) Stake the differential case.

4. INSTALL RING GEAR ON DIFFERENTIAL CASE

(a) Clean the contact surfaces of the differential case and ring gear.

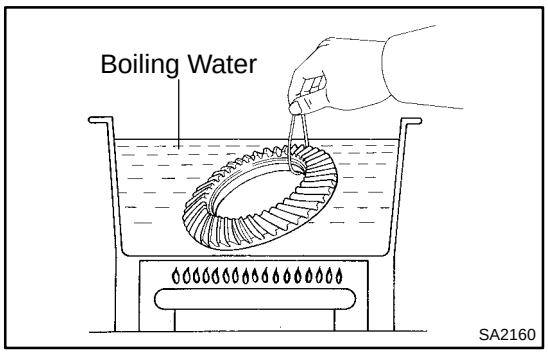

(b) Heat the ring gear to about 100˚C (212˚F) in boiling water.
(c) Carefully take the ring gear out of the boiling water.
(d) After the moisture on the ring gear has completely evaporated, quickly install the ring gear to the differential case.

HINT:
Align the matchmarks on the ring gear and differential case.

(e) Temporarily install 5 new lock plates and 10 bolts so that the bolt holes in the ring gear and differential case are aligned.
(f) After the ring gear has cooled sufficiently, torque the ring gear set bolts.
Torque: 97 N·m (985 kgf·cm, 71 ft·lbf)

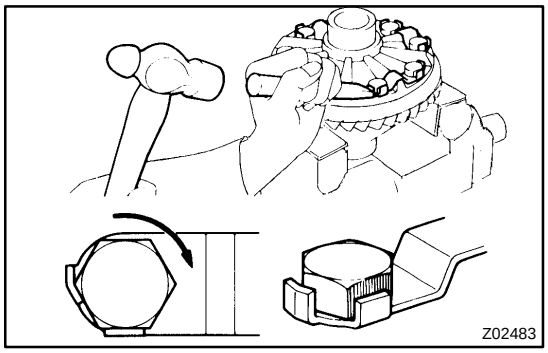

(g) Using a chisel and hammer, stake the 5 lock plates.

HINT:
Stake the claws of the lock plates to fix the bolts. For the claw contacting the protruding portion of the bolt, stake only the half of it along the tightening direction.

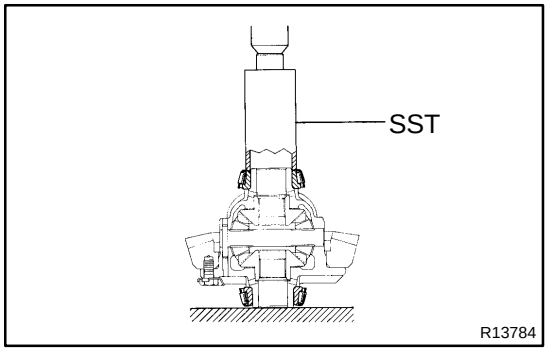

5. INSTALL SIDE BEARINGS

Using SST and a press, install the bearings into the differential case.

SST 09226–10010

6. INSTALL SIDE BEARING OUTER RACES

If replacing the side bearings, fit the thinnest new plate washers to each bearing outer race.
If reusing the bearings, fit the new washers with the same thickness as removed.

(a) Install a new plate washer to the side bearing retainer.
(b) Using SST and a press, install the bearing outer race.
SST 09950–60020 (09951–00790),
09950–70010 (09951–07150)
(c) Install a new plate washer to the differential carrier.

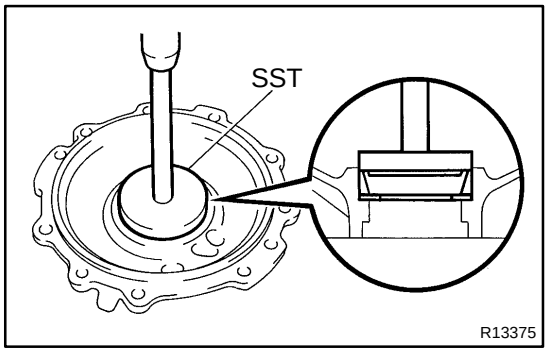

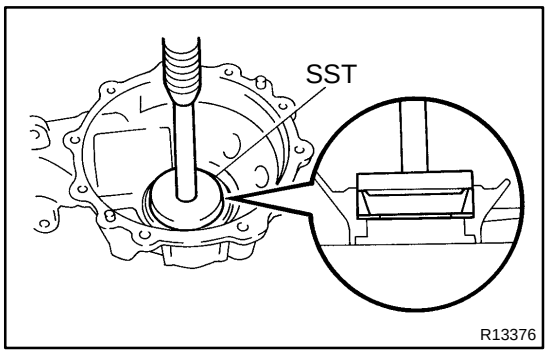

(d) Using SST and a press, install the bearing outer race.
SST 09950–60020 (09951–00790),
09950–70010 (09951–07150)

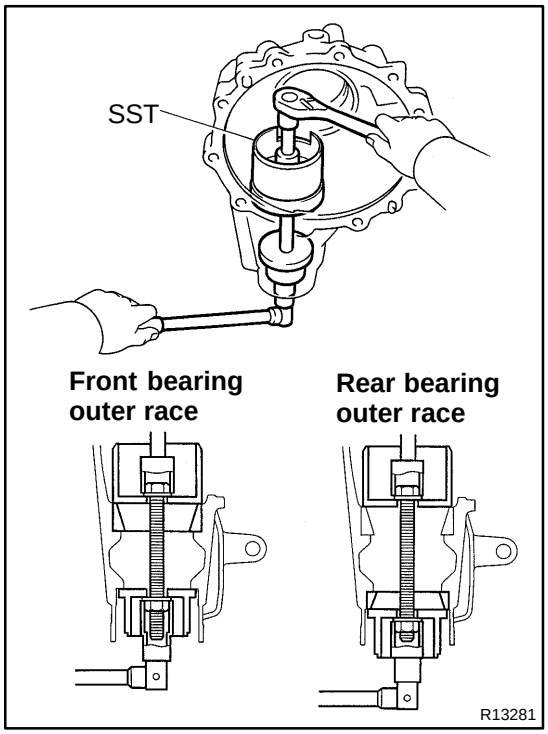

7. INSTALL DRIVE PINION FRONT AND REAR BEARING OUTER RACES

Using SST, install the 2 outer races.
SST 09570–22011

8. INSTALL DRIVE PINION FRONT BEARING

(a) Install the washer on the drive pinion.

HINT:

First fit a washer with the same thickness as the washer which was removed, then after checking the tooth contact pattern, replace the washer with one of a different thickness if necessary.

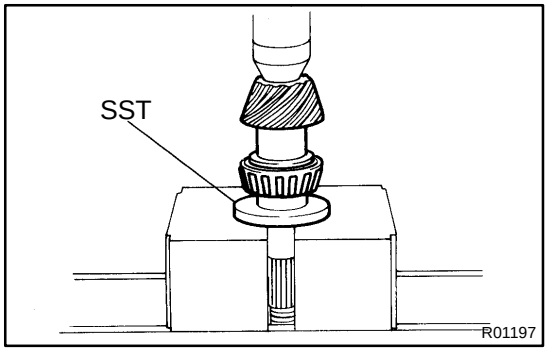

(b) Using SST and a press, install the front bearing onto the drive pinion.
SST 09506–30012

9. TEMPORARILY ADJUST DRIVE PINION PRELOAD

(a) Install the drive pinion, rear bearing and oil slinger.

HINT:

After adjusting the ring gear tooth contact pattern, assemble the spacer and oil seal.

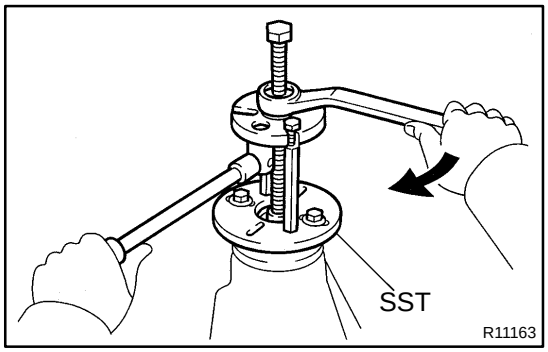

(b) Using SST, install the companion flange.
SST 09950–30012 (09951–03010, 09953–03010, 09954–03010, 09955–03030, 09956–03020)

(c) Coat the threads of the nut with hypoid gear oil.

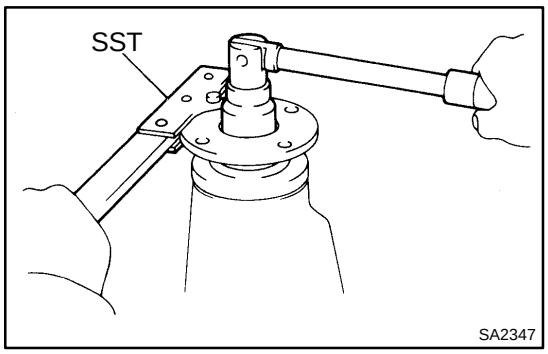

(d) Using SST to hold the flange, tighten the nut.

HINT:

Adjust the drive pinion preload by tightening the companion flange nut.

SST 09330–00021

NOTICE:

As there is no spacer, tighten the nut a little at a time and be careful not to overtighten it.

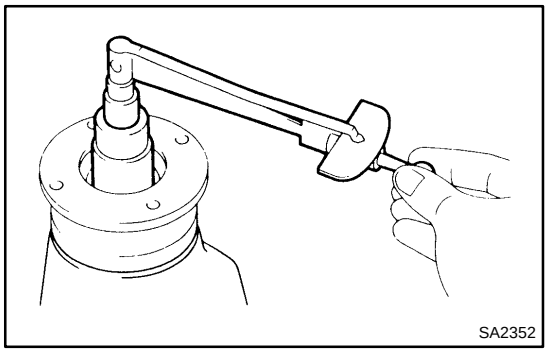

(e) Using a torque wrench, measure the preload of the drive pinion using the backlash between the drive pinion and ring gear.

Preload (at starting):

New bearing

1.2 – 1.9 N·m (12 – 19 kgf·cm, 10.4 – 16.5 in.·lbf)

Reused bearing

0.6 – 1.0 N·m (6 – 10 kgf·cm, 5.2 – 8.7 in.·lbf)

10. INSTALL DIFFERENTIAL CASE IN DIFFERENTIAL CARRIER

11. ADJUST RING GEAR BACKLASH

(a) Install the side bearing retainer with the 10 bolts.

Torque: 69 N·m (700 kgf·cm, 51 ft·lbf)

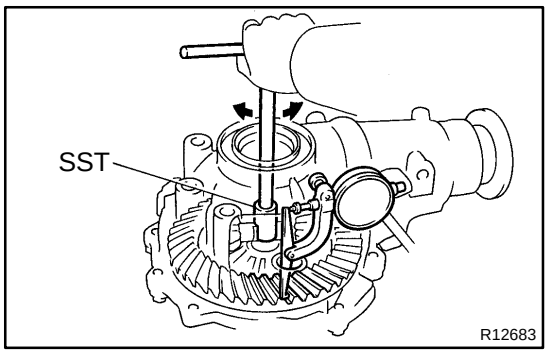

(b) Using SST and a dial indicator, measure the ring gear backlash.

SST 09564–32011

Backlash: 0.13 – 0.18 mm (0.0051 – 0.0071 in.)

If the backlash is not within the specified value, adjust it by either increasing or decreasing the thickness of plate washers on both sides by an equal amount.

HINT:

There should be no clearance between the plate washer and case. Ensure that there is ring gear backlash.

Washer thickness:

Thickness mm (in.)	Thickness mm (in.)	Thickness mm (in.)
2.00 – 2.02 (0.0787 – 0.0795)	2.27 – 2.29 (0.0894 – 0.0902)	2.54 – 2.56 (0.1000 – 0.1008)
2.03 – 2.05 (0.0799 – 0.0807)	2.30 – 2.32 (0.0906 – 0.0913)	2.57 – 2.59 (0.1012 – 0.1020)
2.06 – 2.08 (0.0811 – 0.0819)	2.33 – 2.35 (0.0917 – 0.0925)	2.60 – 2.62 (0.1024 – 0.1031)
2.09 – 2.11 (0.0823 – 0.0831)	2.36 – 2.38 (0.0929 – 0.0937)	2.63 – 2.65 (0.1035 – 0.1043)
2.12 – 2.14 (0.0835 – 0.0843)	2.39 – 2.41 (0.0941 – 0.0949)	2.66 – 2.68 (0.1047 – 0.1055)
2.15 – 2.17 (0.0846 – 0.0854)	2.42 – 2.44 (0.0953 – 0.0961)	2.69 – 2.71 (0.1059 – 0.1067)
2.18 – 2.20 (0.0858 – 0.0866)	2.45 – 2.47 (0.0965 – 0.0972)	2.72 – 2.74 (0.1071 – 0.1079)
2.21 – 2.23 (0.0870 – 0.0878)	2.48 – 2.50 (0.0976 – 0.0984)	2.75 – 2.77 (0.1083 – 0.1091)
2.24 – 2.26 (0.0882 – 0.0890)	2.51 – 2.53 (0.0988 – 0.0996)	2.78 – 2.80 (0.1094 – 0.1102)

12. MEASURE TOTAL PRELOAD

Using a torque wrench, measure the preload with the teeth of the drive pinion and ring gear in contact.

Total preload (at starting):

Drive pinion preload plus 0.4 – 0.6 N·m (4 – 6 kgf·cm, 3.5 – 5.2 in.·lbf)

13. INSPECT TOOTH CONTACT BETWEEN RING GEAR AND DRIVE PINION

(a) Remove the 10 bolts, side bearing retainer and differential case.

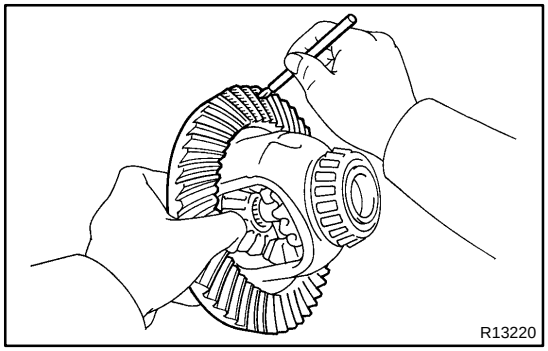

(b) Coat 3 or 4 teeth at three different positions on the ring gear with red lead primer.

(c) Install the differential case and side bearing retainer with the 10 bolts.

Torque: 69 N·m (700 kgf·cm, 51 ft·lbf)

(d) Hold the companion flange firmly and rotate the ring gear in both directions.

(e) Remove the 10 bolts, side bearing retainer and differential case.

(f) Inspect the tooth contact pattern.

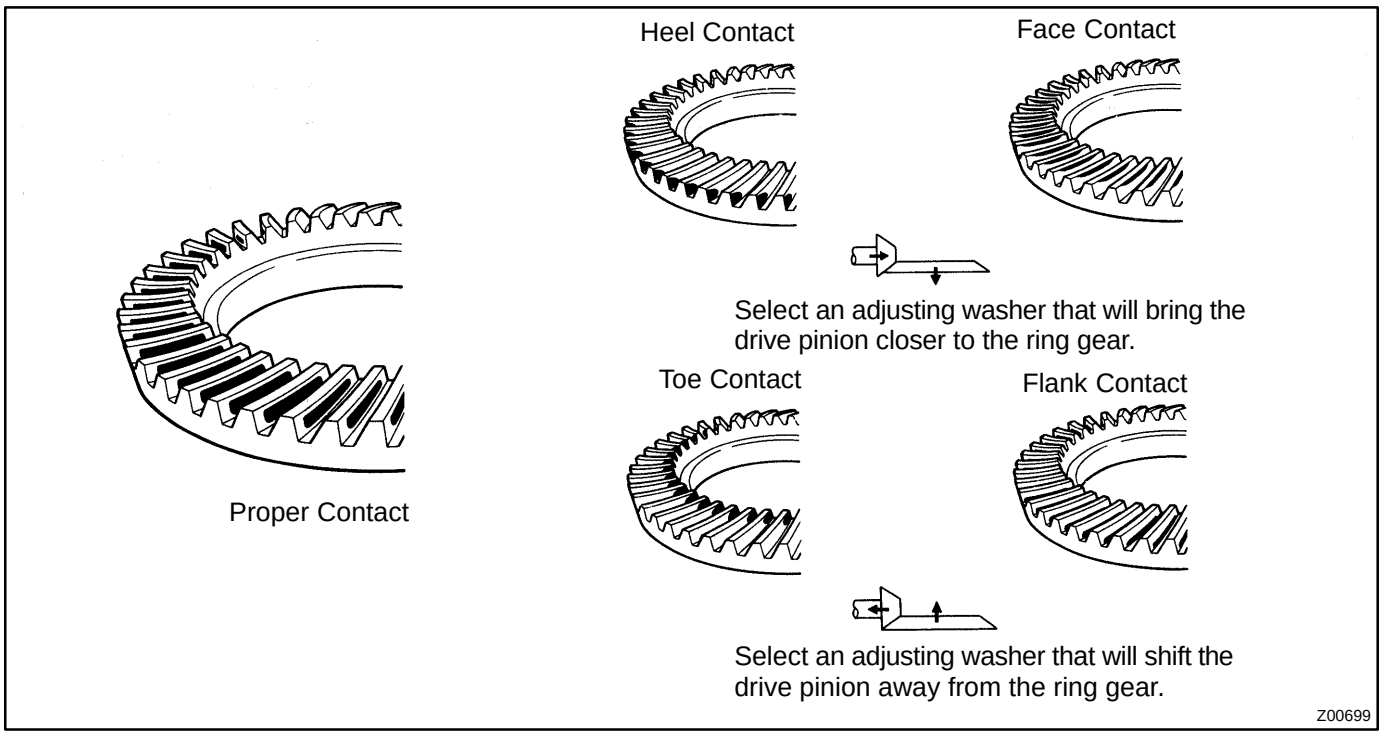

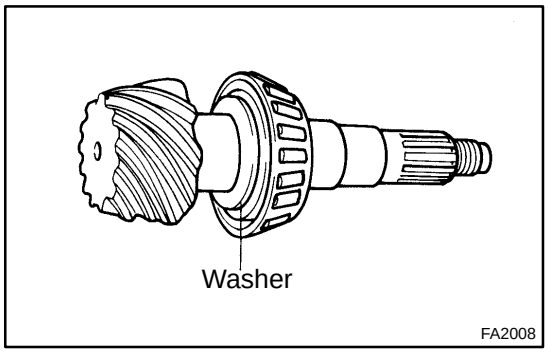

If the teeth are not contacting properly, use the following table to select a proper washer for correction.

Washer thickness:

Thickness mm (in.)	Thickness mm (in.)	Thickness mm (in.)
1.69 – 1.71 (0.0665 – 0.0673)	1.93 – 1.95 (0.0760 – 0.0768)	2.17 – 2.19 (0.0854 – 0.0862)
1.72 – 1.74 (0.0677 – 0.0685)	1.96 – 1.98 (0.0772 – 0.0780)	2.20 – 2.22 (0.0866 – 0.0874)
1.75 – 1.77 (0.0689 – 0.0697)	1.99 – 2.01 (0.0783 – 0.0791)	2.23 – 2.25 (0.0878 – 0.0886)
1.78 – 1.80 (0.0701 – 0.0709)	2.02 – 2.04 (0.0795 – 0.0803)	2.26 – 2.28 (0.0890 – 0.0898)
1.81 – 1.83 (0.0713 – 0.0720)	2.05 – 2.07 (0.0807 – 0.0815)	2.29 – 2.31 (0.0902 – 0.0909)
1.84 – 1.86 (0.0724 – 0.0732)	2.08 – 2.10 (0.0819 – 0.0827)	2.32 – 2.34 (0.0913 – 0.0921)
1.87 – 1.89 (0.0736 – 0.0744)	2.11 – 2.13 (0.0831 – 0.0839)	–
1.90 – 1.92 (0.0748 – 0.0756)	2.14 – 2.16 (0.0843 – 0.0850)	–

14. REMOVE COMPANION FLANGE AND OIL SLINGER (See page SA–48)

15. REMOVE REAR BEARING (See page SA–48)

16. INSTALL NEW BEARING SPACER, REAR BEARING AND OIL SLINGER

(a) Install a new bearing spacer and place the rear bearing and oil slinger.

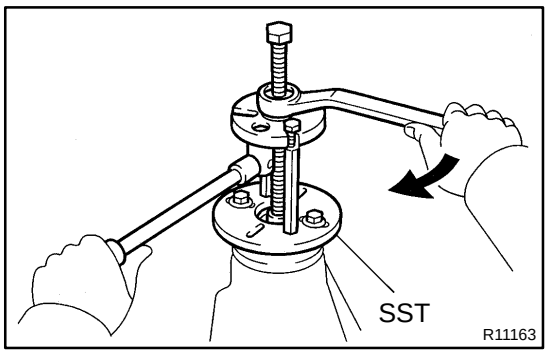

(b) Using SST and the companion flange, install the rear bearing, then remove the companion flange.
SST 09950–30012 (09951–03010, 09953–03010, 09954–03010, 09955–03030, 09956–03020)

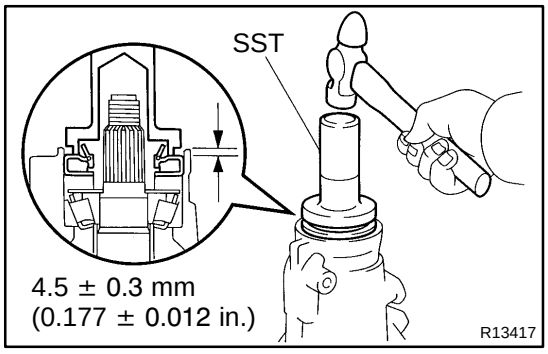

17. INSTALL OIL SEAL

(a) Using SST and a hammer, install a new oil seal.
SST 09554–22010
Oil seal drive in depth: 4.5 ± 0.3 mm (0.177 ± 0.012 in.)

(b) Coat the oil seal lip with MP grease.

18. INSTALL COMPANION FLANGE

(a) Place the companion flange on the drive pinion.

(b) Coat the threads of a new nut with hypoid gear oil.

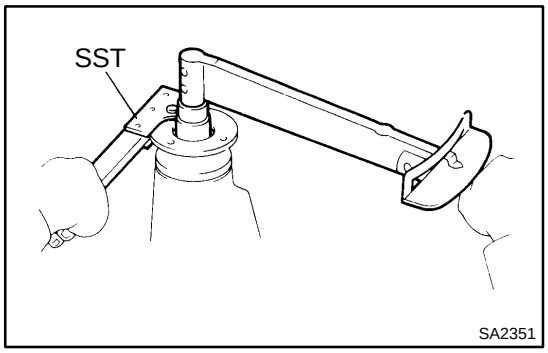

(c) Using SST to hold the flange, torque the nut.
SST 09330–00021
Torque: 108 N·m (1,100 kgf·cm, 80 ft·lbf)

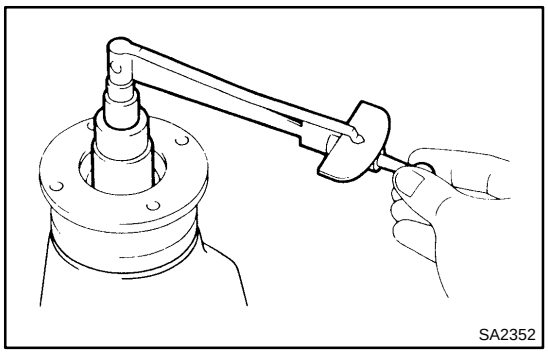

19. ADJUST DRIVE PINION PRELOAD

Using a torque wrench, measure the preload of the drive pinion using the backlash between the drive pinion and the ring gear.

Preload (at starting):
New bearing
1.2 – 1.9 N·m (12 – 19 kgf·cm, 10.4 – 16.5 in.·lbf)
Reused bearing
0.6 – 1.0 N·m (6 – 10 kgf·cm, 5.2 – 8.7 in.·lbf)

If the preload is greater than the specified value, replace the bearing spacer.

If the preload is less than the specified value, retighten the nut with 13 N·m (130 kgf·cm, 9 ft·lbf) of torque at a time until the specified preload is reached.

Torque: 223 N·m (2,275 kgf·cm, 165 ft·lbf) or less

If the maximum torque is exceeded while retightening the nut, replace the bearing spacer and repeat the preload adjusting procedure. Do not loosen the nut to reduce the preload.

20. INSTALL DIFFERENTIAL CASE

21. INSTALL SIDE BEARING RETAINER

(a) Remove any old FIPG material and be careful not to drop oil on the contact surfaces of the differential carrier and side bearing retainer.

(b) Clean both installation surfaces of loose FIPG and oil material with gasoline or alcohol.

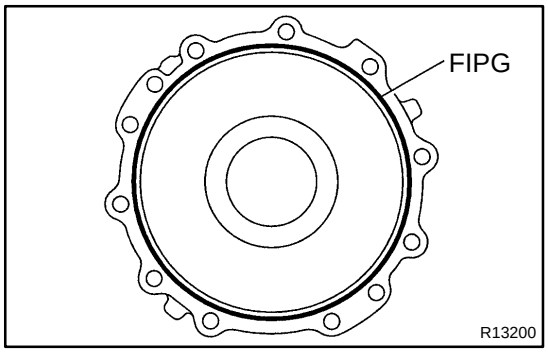

(c) Apply FIPG to the side bearing retainer, as shown in the illustration.

FIPG:

Part No. 08826–00090, THREE BOND 1281 or equivalent

HINT:

Install the side bearing retainer within 10 minutes after applying FIPG.

(d) Install the side bearing retainer with the 10 bolts.

Torque: 69 N·m (700 kgf·cm, 51 ft·lbf)

22. CHECK TOTAL PRELOAD (See step 12.)

23. RECHECK RING GEAR BACKLASH (See page SA–48)

24. RECHECK TOOTH CONTACT BETWEEN RING GEAR AND DRIVE PINION (See step 13.)

25. CHECK COMPANION FLANGE RUNOUT (See page SA–48)

26. STAKE DRIVE PINION NUT

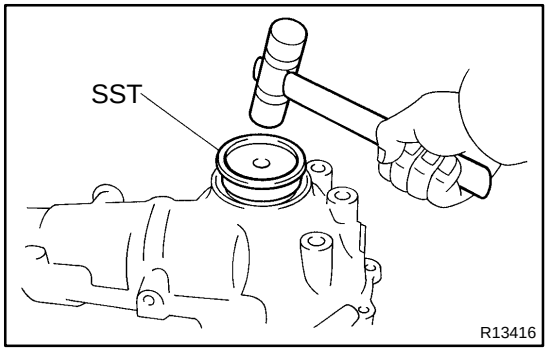

27. INSTALL SIDE OIL SEAL

(a) Using SST and a plastic hammer, install a new oil seal until its surface is flush with the differential carrier end.

SST 09608–32010

(b) Coat the oil seal lip with MP grease.

28. INSTALL INTERMEDIATE SHAFT NO. 1

(a) Install a new snap ring to the shaft.

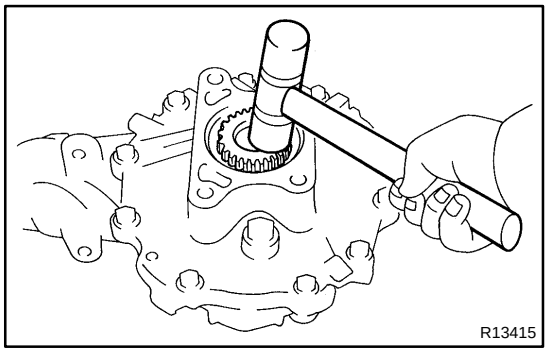

(b) Using a plastic hammer, install the shaft to the differential case.

(c) Check that there is 2 – 3 mm (0.08 – 0.12 in.) of play in the axial direction.

(d) Check that the intermediate shaft will not come out by trying to pull it completely out by hand.

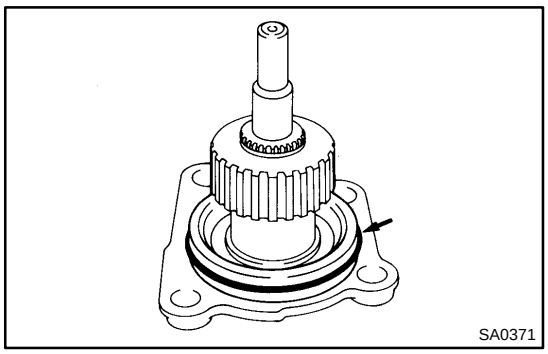
SA0371

29. INSTALL CLUTCH CASE TO DIFFERENTIAL TUBE

(a) Install a new O–ring to the tube.

(b) Coat the O–ring with MP grease.

(c) Install the clutch case to the tube.

(d) Using a torx socket (E14), torque the 2 torx bolts.
Torque: 78 N·m (800 kgf·cm, 58 ft·lbf)

30. INSTALL CLUTCH SLEEVE

31. INSTALL DIFFERENTIAL TUBE TO DIFFERENTIAL

(a) Remove any old FIPG material and be careful not to drop oil on the contact surfaces of the differential and clutch case.

(b) Clean both installation surfaces of loose FIPG and oil material with gasoline or alcohol.

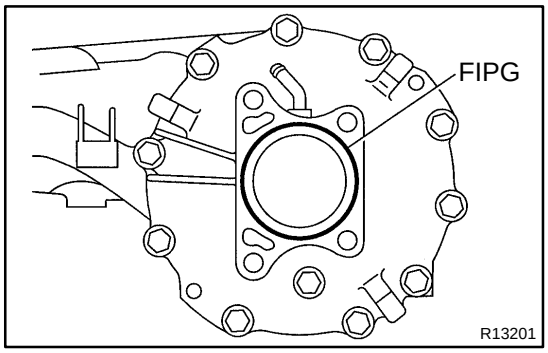

R13201

(c) Apply FIPG to the differential, as shown in the illustration.
FIPG:
Part No. 08826–00090, THREE BOND 1281 or equivalent

HINT:
Install the differential tube within 10 minutes after applying FIPG.

(d) Install the differential tube to the differential.

(e) Clean the threads of the 2 long torx bolts and retainer bolt holes with toluene or trichlorethylene.

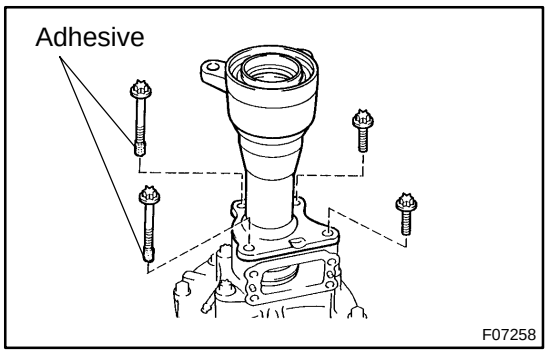

F07258

(f) Apply adhesive to 2 or 3 threads of the long bolts end.
Adhesive:
Part No. 08833–00070, THREE BOND 1324 or equivalent

(g) Using torx socket (E14), torque the 4 torx bolts.
Torque: 78 N·m (800 kgf·cm, 58 ft·lbf)

32. INSTALL A.D.D. ACTUATOR

(a) Remove any old FIPG material and be careful not to drop oil on the contact surfaces of the actuator and clutch case.

(b) Clean both installation surfaces of loose FIPG and oil material with gasoline or alcohol.

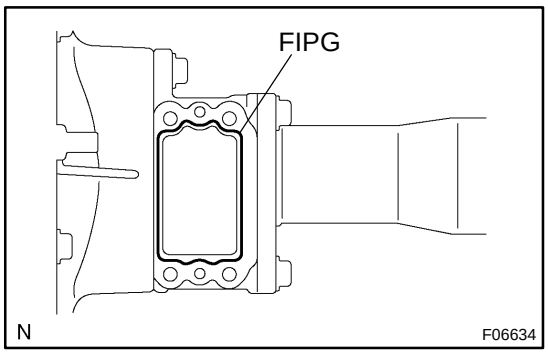

(c) Apply FIPG to the clutch case, as shown in the illustration.
FIPG:
Part No. 08826–00090, THREE BOND 1281 or equivalent

HINT:
Install the actuator within 10 minutes after applying FIPG.

(d) Install the A.D.D. actuator with the 4 bolts.
Torque: 21 N·m (210 kgf·cm, 15 ft·lbf)

SA09O–04

REMOVAL

1. DRAIN DIFFERENTIAL OIL

2. REMOVE DRIVE SHAFTS (See page SA–34)

3. DISCONNECT FRONT PROPELLER SHAFT (See page PR–11)

HINT:

Support the front propeller shaft securely.

4. REMOVE TUBE WITH WIRE HARNESS ASSEMBLY

(a) Disconnect the breather hose, vacuum hose and actuator connector.

(b) Remove the bolt and tube with wire harness assembly.

5. REMOVE FRONT DIFFERENTIAL CARRIER

(a) Support the front differential with a jack.

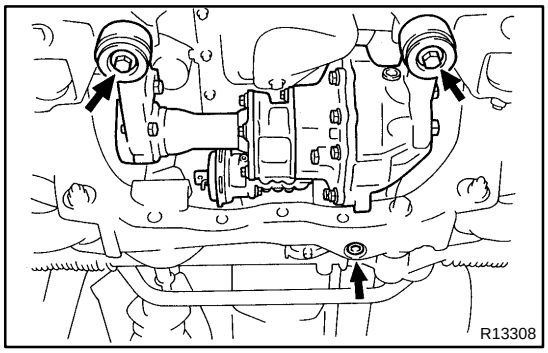

(b) Remove the rear mounting nut.

(c) Remove the 2 front mounting bolts.

(d) Lower the jack and remove the front differential carrier.

6. REMOVE DIFFERENTIAL MOUNTING CUSHIONS

(a) Remove the 2 bolts and rear mounting cushion.

(b) Remove the 5 bolts and 2 front mounting cushions.

SA1K4–01

REPLACEMENT

1. REPLACE COMPANION FLANGE DUST DEFLECTOR, IF NECESSARY

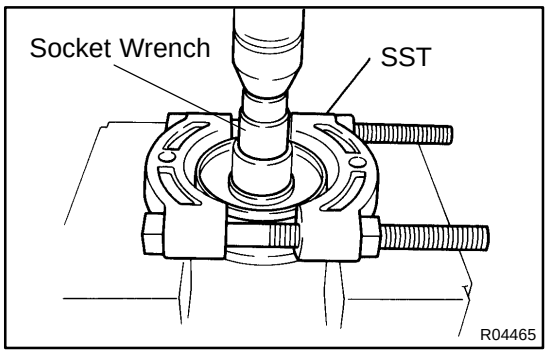

(a) Using SST, a socket wrench and a press, remove the dust deflector.
SST 09950–00020

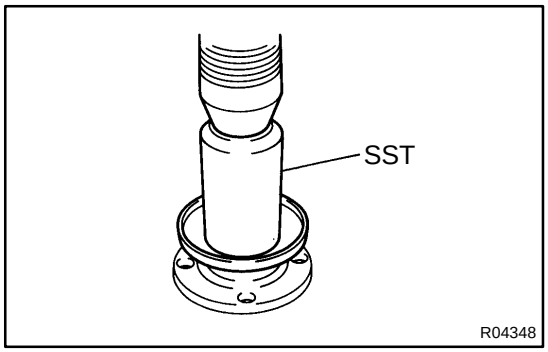

(b) Using SST and a press, install a new dust deflector.
SST 09636–20010

2. REPLACE INTERMEDIATE SHAFT NO. 2, IF NECESSARY

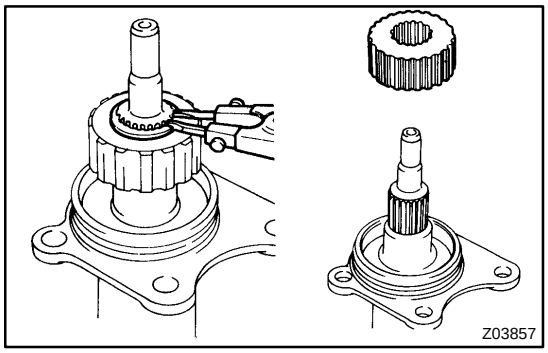

(a) Remove the clutch hub.
(1) Using a snap ring expander, remove the snap ring.
(2) Remove the clutch hub from the intermediate shaft No. 2.

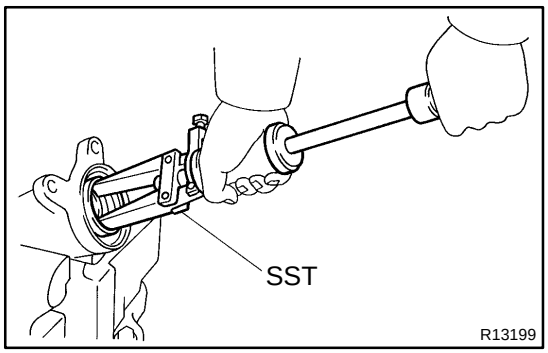

(b) Remove the oil seal.
Using SST, remove the oil seal from the tube.
SST 09308–00010

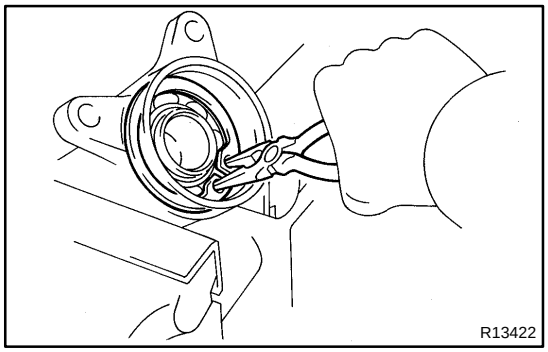

(c) Remove the intermediate shaft No. 2 from the tube.
(1) Using needle nose pliers, remove the snap ring.
(2) Remove the shaft from the tube.

(d) Remove the intermediate shaft No. 2 bearing.
(1) Using a snap ring expander, remove the snap ring.

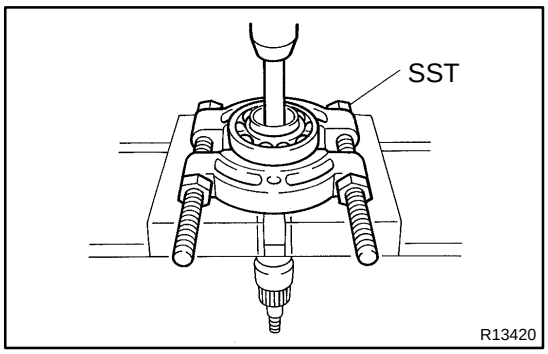

(2) Using SST, a brass bar and press, remove the bearing.

SST 09950–00020

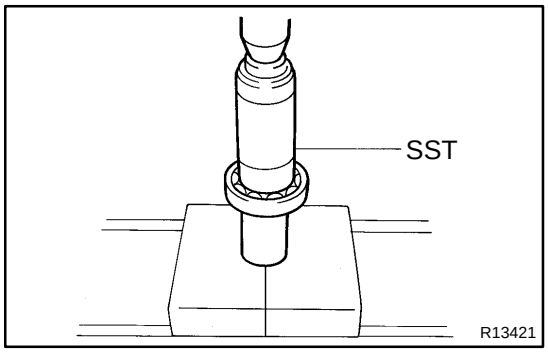

(e) Install a new intermediate shaft No. 2 bearing.
(1) Using SST and a press, install a new bearing.
SST 09309–37010
(2) Using a snap ring expander, install a new snap ring.

(f) Install the intermediate shaft No. 2 to the tube.
(1) Install the shaft into the tube.
(2) Using needle nose pliers, install a new snap ring.

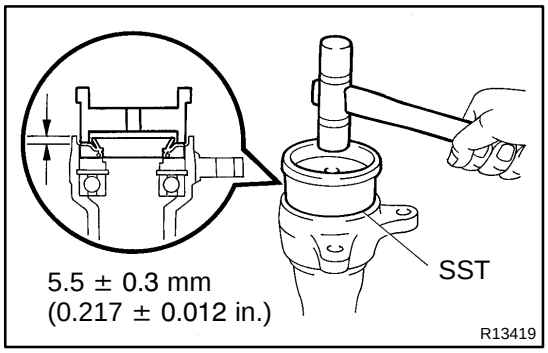

(g) Install a new oil seal.
(1) Using SST and a plastic hammer, install a new oil seal.
SST 09223–15020
Oil seal drive in depth: 5.5 ± 0.3 mm (0.217 ± 0.012 in.)
(2) Coat the oil seal lip with MP grease.

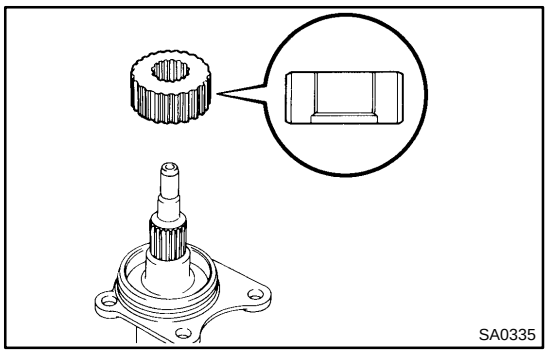

(h) Install the clutch hub.
(1) Install the clutch hub to the shaft.
(2) Using a snap ring expander, install a new snap ring.

FRONT DIFFERENTIAL REAR OIL SEAL (4WD)

SA09L–04

COMPONENTS

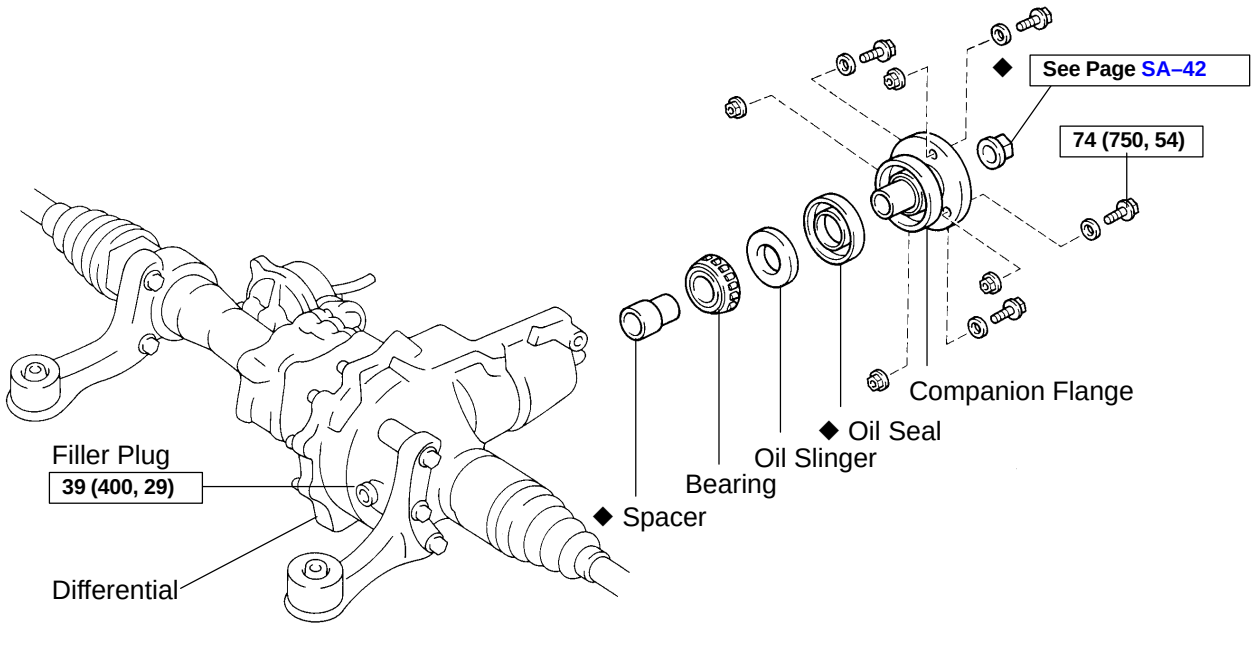

N·m (kgf·cm, ft·lbf) : Specified torque
◆ Non–reusable part
N

F06626

SA09M–08

REPLACEMENT

1. **REMOVE UNDER COVER**
2. **REMOVE FRONT PROPELLER SHAFT (See page PR–11)**

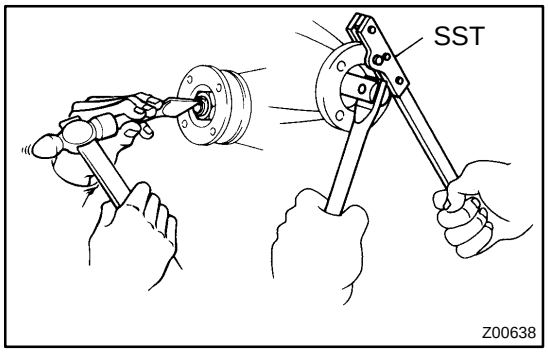

3. **REMOVE COMPANION FLANGE**

(a) Using a chisel and hammer, unstake the nut.

(b) Using SST to hold the flange, remove the nut.
SST 09330–00021

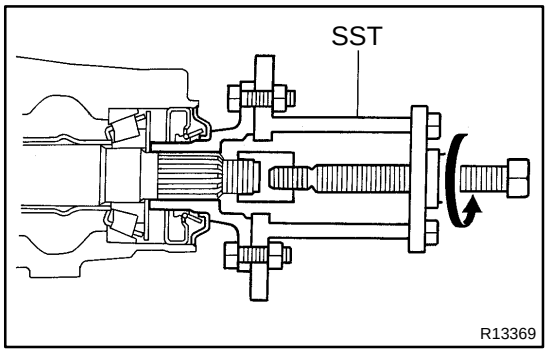

(c) Using SST, remove the companion flange.
SST 09950–30012 (09951–03010, 09953–03010, 09954–03010, 09955–03030, 09956–03020)

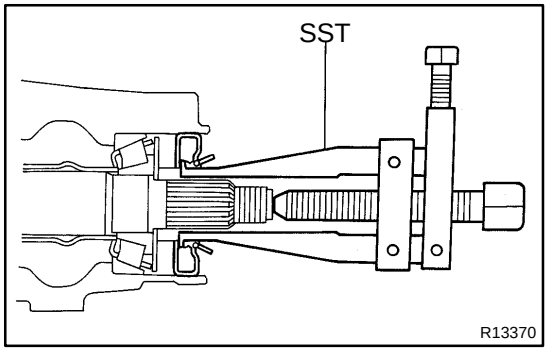

4. **REMOVE OIL SEAL AND OIL SLINGER**

(a) Using SST, remove the oil seal.
SST 09350–32014 (09308–10010)

(b) Remove the oil slinger.

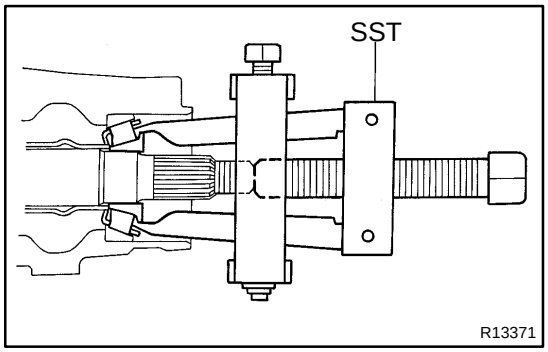

5. **REMOVE REAR BEARING AND BEARING SPACER**

(a) Using SST, remove the rear bearing from the drive pinion.
SST 09556–22010

(b) Remove the bearing spacer.

6. **INSTALL BEARING SPACER, REAR BEARING AND OIL SLINGER**

(a) Install a new bearing spacer and place the rear bearing and oil slinger.

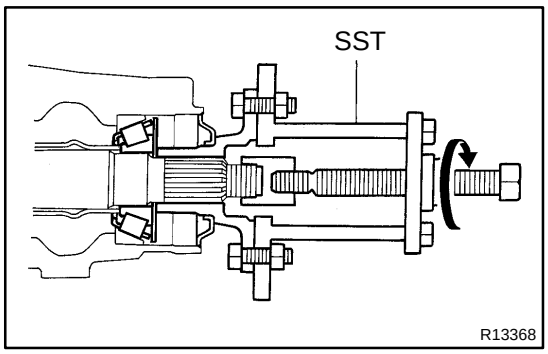

(b) Using SST and the companion flange, install the rear bearing, then remove the companion flange.
SST 09950–30012 (09951–03010, 09953–03010, 09954–03010, 09955–03030, 09956–03020)

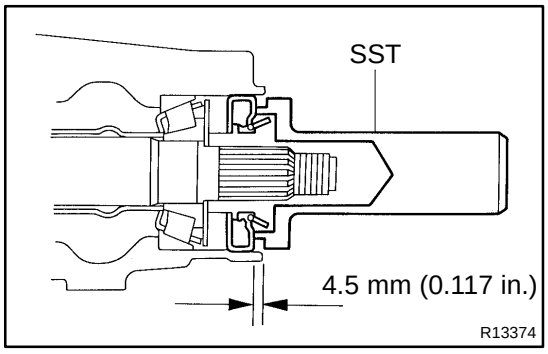

7. INSTALL OIL SEAL

(a) Coat a new oil seal lip with MP grease.

(b) Using SST and a hammer, install the oil seal.
SST 09554–22010
Oil seal drive in depth: 4.5 mm (0.177 in.)

8. INSTALL COMPANION FLANGE

(a) Place the companion flange on the drive pinion.

(b) Coat the threads of a new nut with hypoid gear oil.

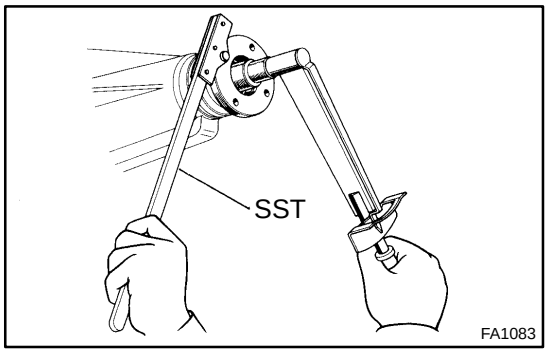

(c) Using SST to hold the flange, torque the nut.
SST 09330–00021
Torque: 108 N·m (1,100 kgf·cm, 80 ft·lbf)

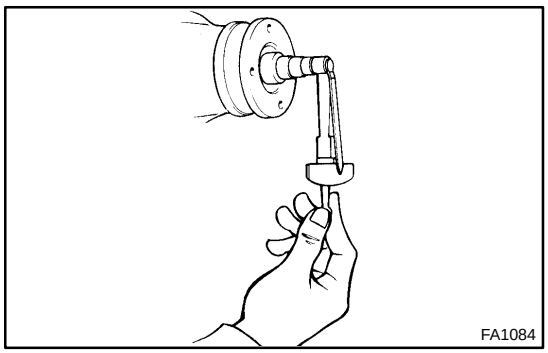

9. ADJUST DRIVE PINION PRELOAD

Using a torque wrench, measure the preload of the drive pinion using the backlash between the drive pinion and ring gear.

Preload (at starting):
0.6 – 1.0 N·m (6 – 10 kgf·cm, 5.2 – 8.7 in.·lbf)

If the preload is greater than the specified value, replace the bearing spacer.

If the preload is less than the specified value, retighten the nut 13 N·m (130 kgf·cm, 9 ft·lbf) a little at a time until the specified preload is reached.

Torque: 223 N·m (2,275 kgf·cm, 165 ft·lbf) or less

If the maximum torque is exceeded while retightening the nut, replace the bearing spacer and repeat the preload adjusting procedure. Do not back off the pinion nut to reduce the preload.

10. STAKE DRIVE PINION NUT

11. INSTALL FRONT PROPELLER SHAFT (See page PR–16)

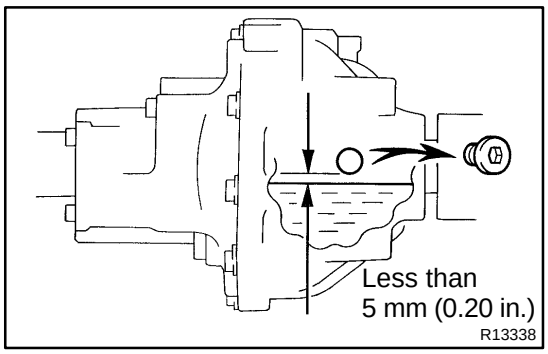

12. FILL DIFFERENTIAL WITH HYPOID GEAR OIL
Torque: 39 N·m (400 kgf·cm, 29 ft·lbf)
Oil type: Hypoid gear oil API GL–5
Recommended oil viscosity: SAE 75W–90
Capacity: 1.15 liters (1.22 US qts, 1.01 Imp. qts)

13. INSTALL UNDER COVER

FRONT DRIVE SHAFT (4WD)

COMPONENTS

SA09G–05

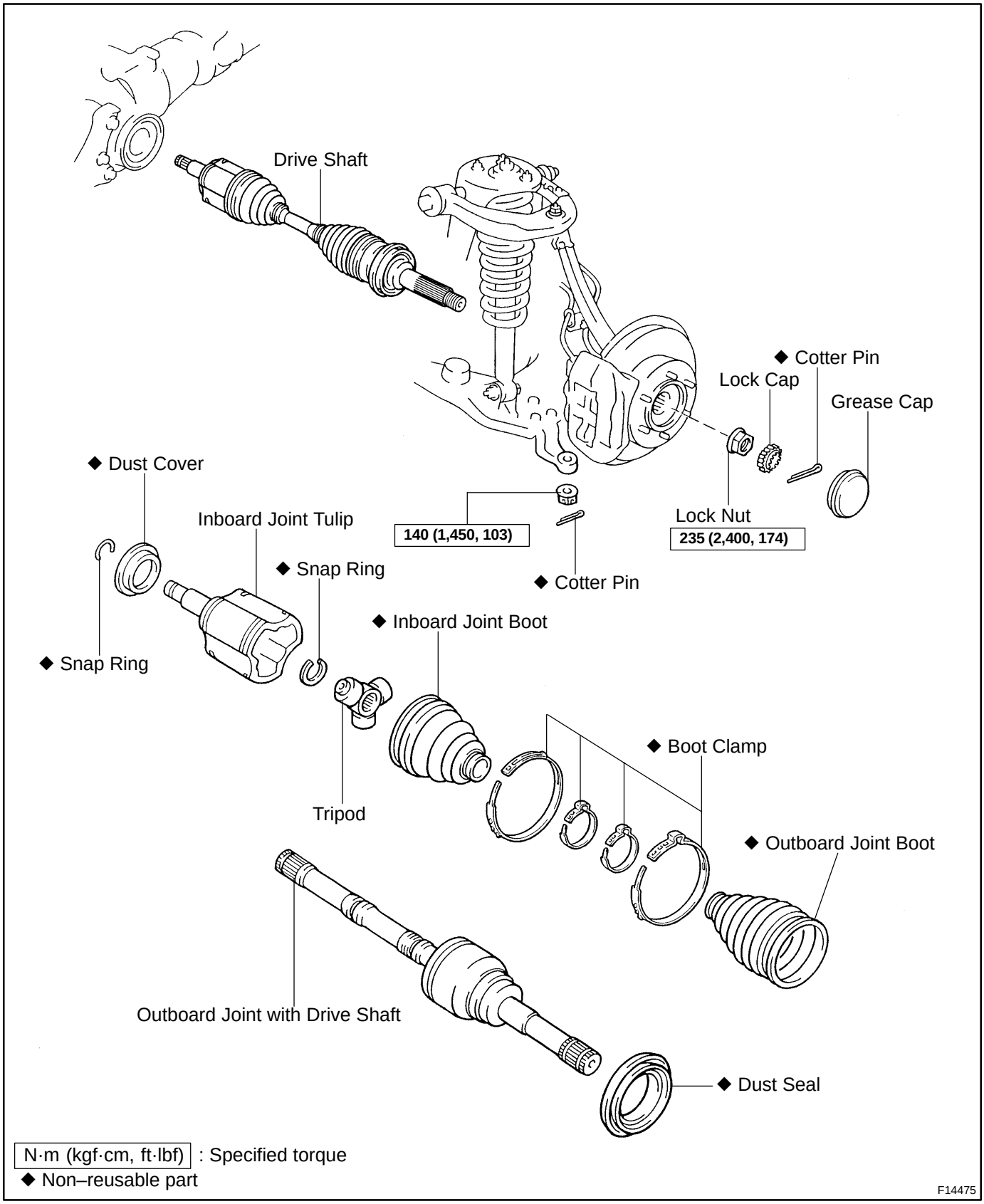

N·m (kgf·cm, ft·lbf) : Specified torque
◆ Non–reusable part

F14475

SA09I–02

DISASSEMBLY

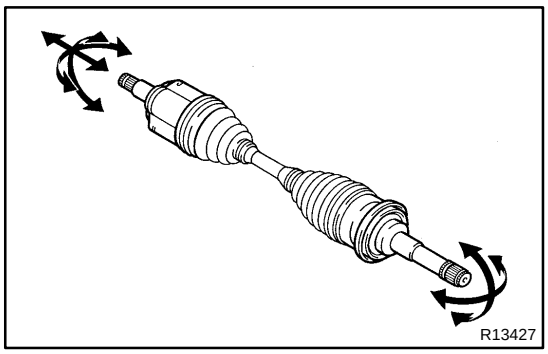

1. CHECK DRIVE SHAFT

(a) Check to see that there is no play in the inboard and outboard joints.
(b) Check to see that the inboard joint slides smoothly in the thrust direction.
(c) Check to see that there is no significant play in the radial direction of the inboard joint.
(d) Check the boot for damage.

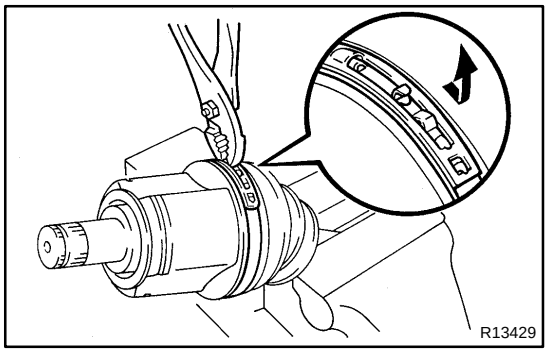

2. REMOVE INBOARD JOINT BOOT CLAMPS

(a) Using pliers, draw the hooks together and remove the large clamp.
(b) Using a side cutter, cut the small boot clamp.
(c) Slide the inboard joint boot toward the outboard joint.

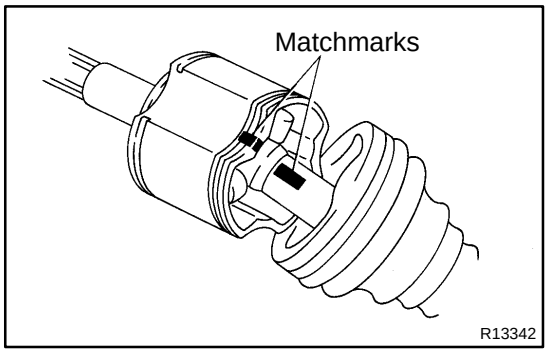

3. REMOVE INBOARD JOINT TULIP

(a) Place matchmarks on the inboard joint and drive shaft.
(b) Remove the inboard joint tulip from the drive shaft.

4. REMOVE TRIPOD JOINT FROM DRIVE SHAFT

(a) Using a snap ring expander, remove the snap ring.

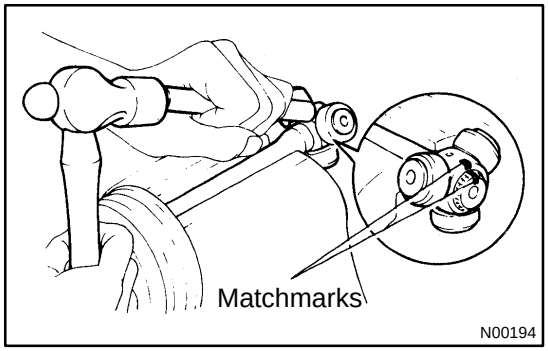

(b) Place matchmarks on the shaft and tripod.
(c) Using a brass bar and hammer, remove the tripod joint.

NOTICE:

Do not tap the roller.

5. REMOVE INBOARD AND OUTBOARD JOINT BOOTS

(a) Remove the inboard joint boot from the drive shaft.
(b) Using a side cutter, cut the outboard boot clamps.
(c) Remove the outboard joint boot from the drive shaft.

NOTICE:

Do not disassemble the outboard joint.

6. REMOVE DUST COVER

Using a screwdriver, remove the dust cover from the inboard joint tulip.

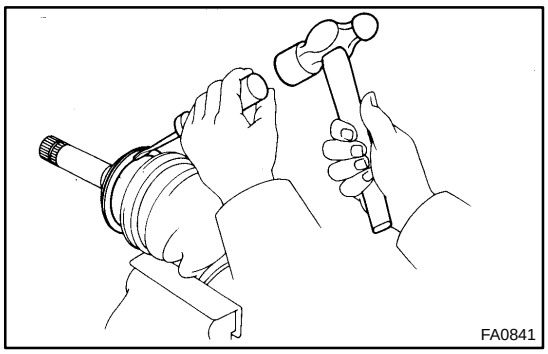

7. REMOVE DUST SEAL

Using a screwdriver and hammer, remove the dust seal from the drive shaft.

SA09K–02

INSTALLATION

Installation is in the reverse order of removal (See page SA–34).

HINT:

After installation, fill the differential with hypoid gear oil (See page SA–42).

SA09J–03

REASSEMBLY

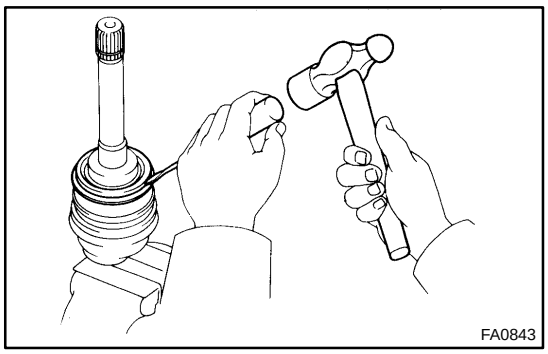

1. INSTALL DUST COVER

Using a screwdriver and hammer, install a new dust cover.

2. INSTALL DUST SEAL

Using a screwdriver and hammer, install a new dust seal.

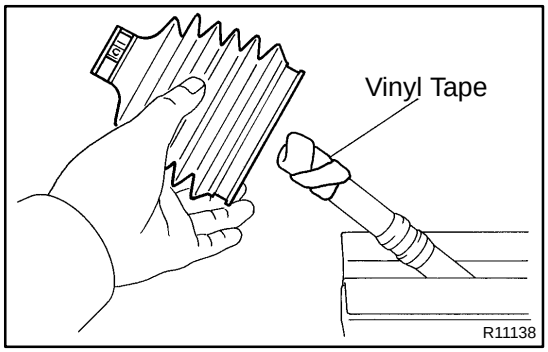

3. TEMPORARILY INSTALL NEW BOOTS TO DRIVE SHAFT

HINT:

- Before installing the boots, wrap vinyl tape around the spline of the shaft to prevent damaging the boot.
- Place new clamps to boot's small ends and install the boots to the drive shaft.

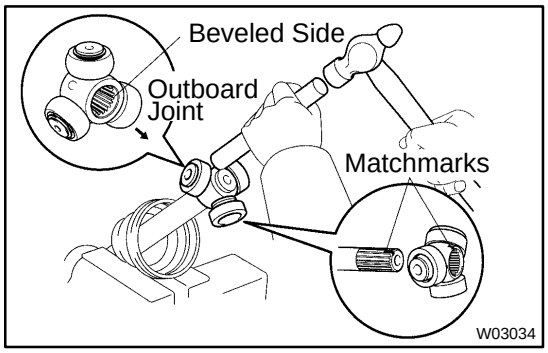

4. ASSEMBLE TRIPOD JOINT

(a) Place the beveled side of the tripod axial spline toward the outboard joint.

(b) Align the matchmarks placed before removal.

(c) Using a brass bar and hammer, install the tripod onto the drive shaft.

NOTICE:

Do not tap the roller.

(d) Using a snap ring expander, install a new snap ring.

5. ASSEMBLE BOOT TO OUTBOARD JOINT

Before assembling the boot, pack the outboard joint and boot with grease in the boot kit.

Grease capacity: (Color = Black)
215 – 235 g (7.58 – 8.29 oz.)

6. ASSEMBLE BOOT AND INBOARD JOINT TULIP

(a) Pack the inboard joint and boot with grease in the boot kit.
Grease capacity: (Color = Yellow ocher)
230 – 250 g (8.11 – 8.82 oz.)

(b) Align the matchmarks placed before removal, install the inboard joint tulip to the drive shaft.

(c) Temporarily install the boot to the inboard joint tulip.

7. ASSEMBLE BOOT CLAMPS TO BOTH BOOTS

(a) Make sure that the boots are in the shaft groove.

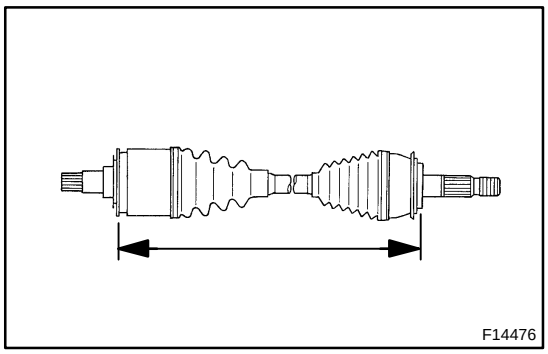
F14476

(b) Make sure that the boots are not stretched or contracted when the drive shaft is at standard length.
Drive shaft standard length:
436.2 ± 2.0 mm (17.173 ± 0.079 in.)

(c) Place a new inboard joint large boot clamp.

(d) Holding the clamp near the closing hooks, position the holes in the clamp's free end over the closing hooks with pliers.

(e) Secure clamps by drawing the closing hooks together.

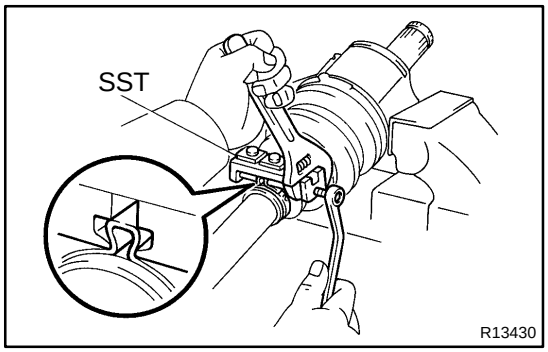

R13430

(f) To assemble the other boot clamps, pinch the clamps and adjust clearance with SST.

NOTICE:
Do not overtighten the SST.

SST 09521–24010

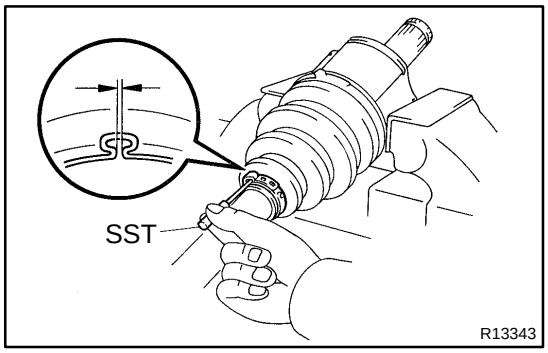

R13343

(g) Measure the clearance of the boot clamps with SST.
SST 09240–00020
Clearance: 1.0 – 1.5 mm (0.039 – 0.059 in.)

8. CHECK DRIVE SHAFT (See page SA–36)

SA22R–01

REMOVAL

1. REMOVE FRONT WHEEL

Torque: 110 N·m (1,150 kgf·cm, 83 ft·lbf)

2. DRAIN DIFFERENTIAL OIL

3. REMOVE DRIVE SHAFT LOCK NUT

(a) Using a screwdriver, remove the grease cap.

(b) Remove the cotter pin and lock cap.

HINT:

At the time of installation, if the holes for the cotter pin are not aligned, tighten the nut further up to 60°.

(c) With applying the brakes, remove the lock nut.

Torque: 235 N·m (2,400 kgf·cm, 174 ft·lbf)

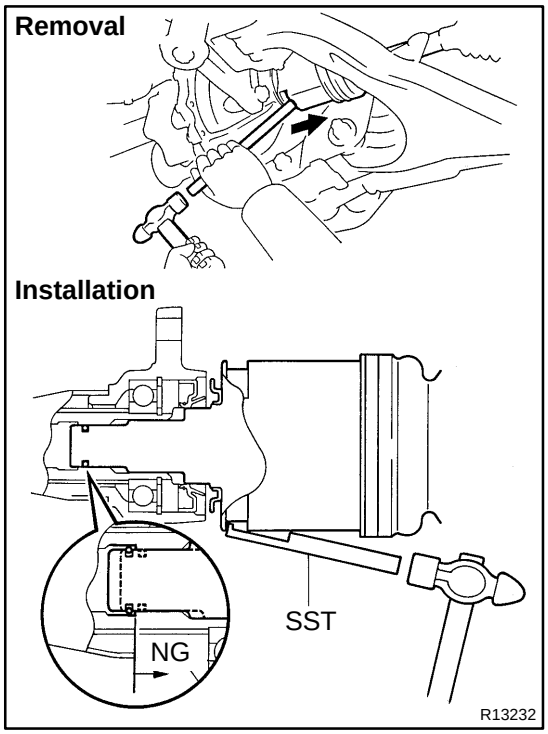

4. DISCONNECT DRIVE SHAFT

(a) Using a brass bar and hammer, disconnect the drive shaft.

HINT:

When it is difficult to disconnect the drive shaft, tap in a screwdriver between differential tube/differential carrier and drive shaft.

HINT:

At the time of installation, please refer to the following items.

- Before installation, set the snap ring opening side facing downward.
- Using SST and a hammer, strike the inboard joint into the differential. At that time, strike the snags evenly to avoid snags deformation.
  SST 09631–10030
- After installation, check that the drive shaft cannot be pulled out by hand.

NOTICE:

Be careful not to damage the dust cover of the drive shaft.

(b) Using a screwdriver, remove the snap ring from the inboard joint tulip.

5. DISCONNECT LOWER SUSPENSION ARM

(a) Remove the cotter pin and nut.

Torque: 140 N·m (1,450 kgf·cm, 103 ft·lbf)

HINT:

At the time of installation, if the holes for the cotter pin are not aligned, tighten the nut further up to 60°.

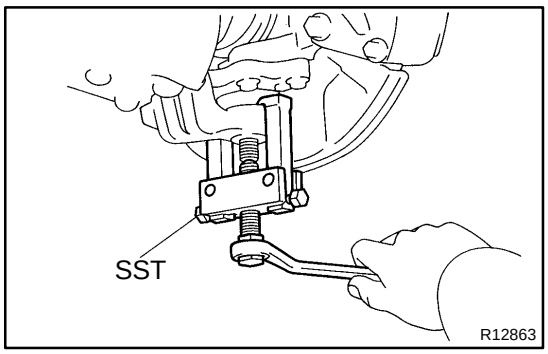

(b) Using SST, disconnect the lower suspension arm.
SST 09628–62011

HINT:
At the time of installation, face the cotter pin hole of the lower ball joint forward.

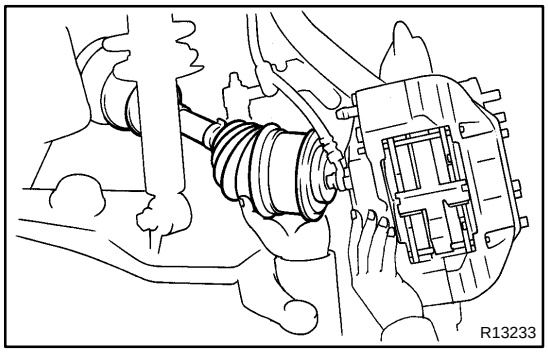

6. REMOVE DRIVE SHAFT

Push the steering knuckle outward and remove the drive shaft.

HINT:
When it is difficult to disconnect the drive shaft, tap the drive shaft with a plastic hammer.

NOTICE:
Be careful not to damage the oil seal, boots and dust seal.

SA0AS–03

COMPONENTS

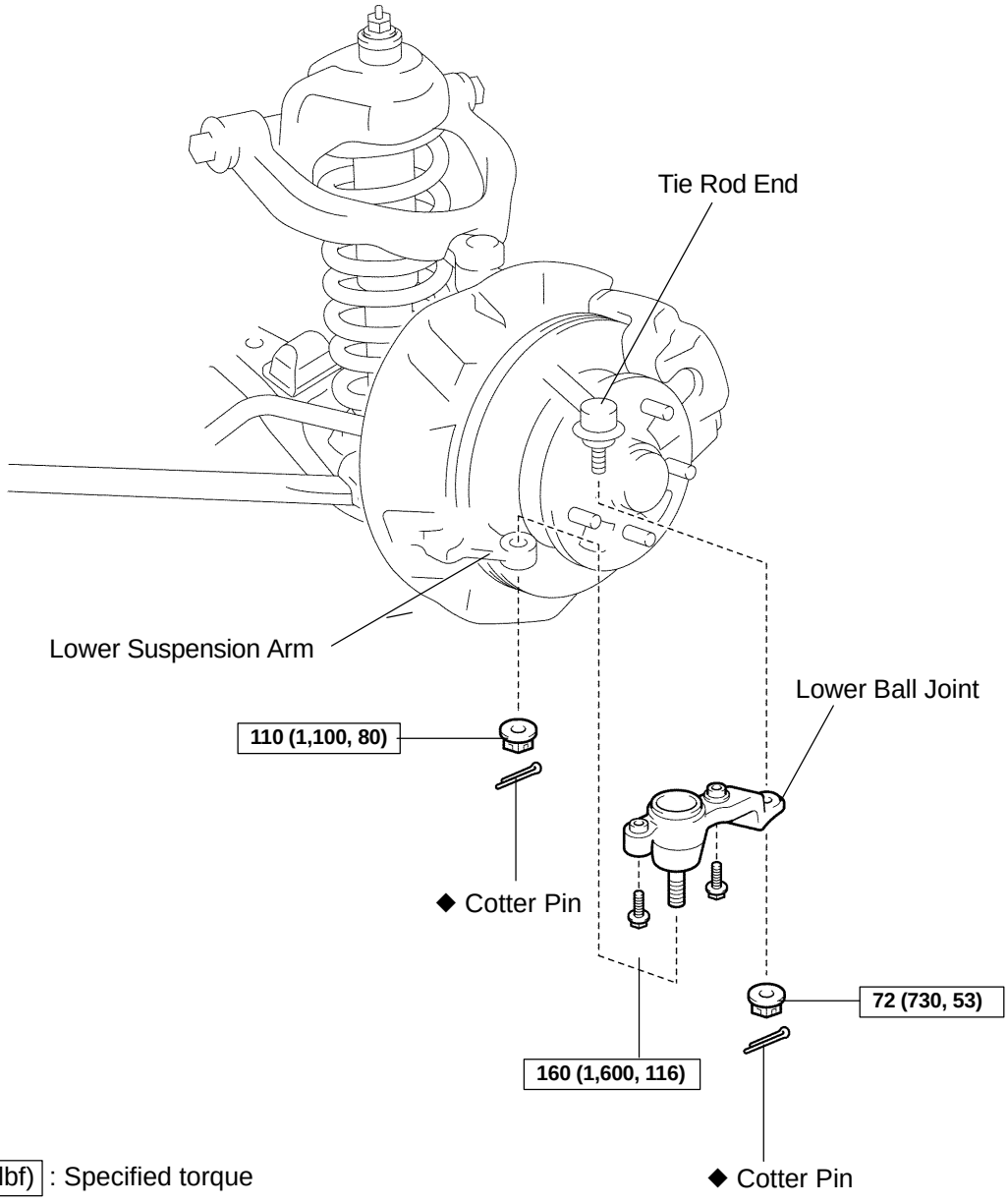

N·m (kgf·cm, ft·lbf) : Specified torque

◆ Non–reusable part

P

F14466

SA0AU–03

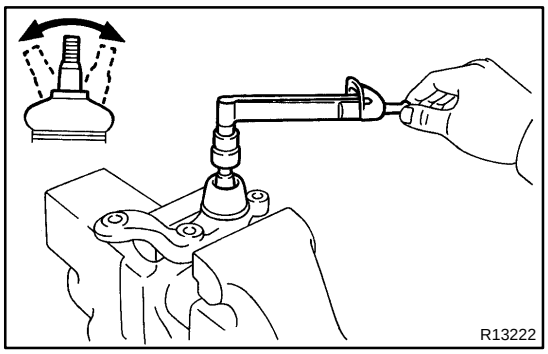

INSPECTION

INSPECT LOWER BALL JOINT FOR ROTATION CONDITION

(a) As shown in the illustration, flip the ball joint stud back and forth 5 times before installing the nut.

(b) Using a torque wrench, turn the nut continuously 1 turn each 2 – 4 seconds and take the torque reading on the 5th turn.

Turning torque:
0.1 – 3.45 N·m (1 – 35 kgf·cm, 0.8 – 30 in.·lbf)

SA0AV–01

INSTALLATION

Installation is in the reverse order of removal (See page SA–110).

FRONT LOWER BALL JOINT (2WD)

SA0AR–02

ON–VEHICLE INSPECTION

INSPECT LOWER BALL JOINT EXCESSIVE PLAY

(a) Remove the front wheel and install the hub nuts to the disc.

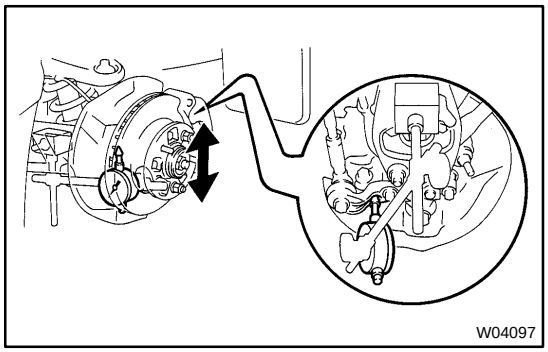

(b) Using a dial indicator, check the lower ball joint for excessive play when you push the hub nuts up and down with a force of 294 N (30 kgf, 66 lbf).
Maximum: 0.5 mm (0.020 in.)

SA0AT–02

REMOVAL

1. REMOVE FRONT WHEEL
Torque: 110 N·m (1,150 kgf·cm, 83 ft·lbf)

2. SUPPORT LOWER SUSPENSION ARM WITH JACK

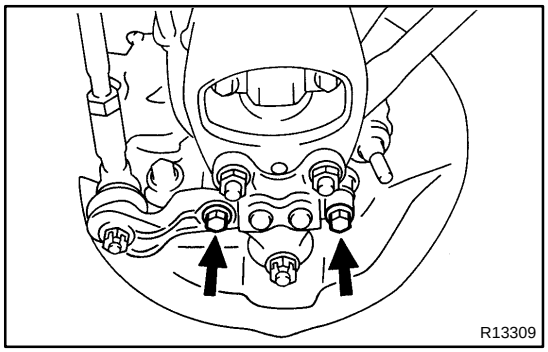

3. DISCONNECT TIE ROD END

(a) Loosen the 2 lower ball joint set bolts.
Torque: 160 N·m (1,600 kgf·cm, 116 ft·lbf)

HINT:
Do not remove the bolts.

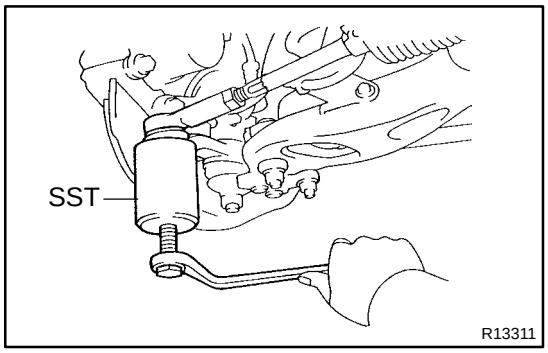

(b) Remove the cotter pin and nut.
Torque: 72 N·m (730 kgf·cm, 53 ft·lbf)

HINT:
At the time of installation, if the holes for the cotter pin are not aligned, tighten the nut further up to 60°.

(c) Using SST, disconnect the tie rod end.
SST 09610–20012

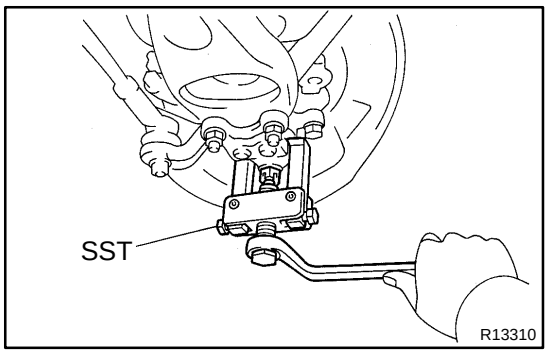

4. REMOVE LOWER BALL JOINT

(a) Remove the cotter pin and loosen the nut.
Torque: 110 N·m (1,100 kgf·cm, 80 ft·lbf)

HINT:
At the time of installation, if the holes for the cotter pin are not aligned, tighten the nut further up to 60°.

(b) Using SST, disconnect the lower ball joint.
SST 09628–62011

(c) Remove the nut, 2 bolts and lower ball joint.

SA0AX–03

COMPONENTS

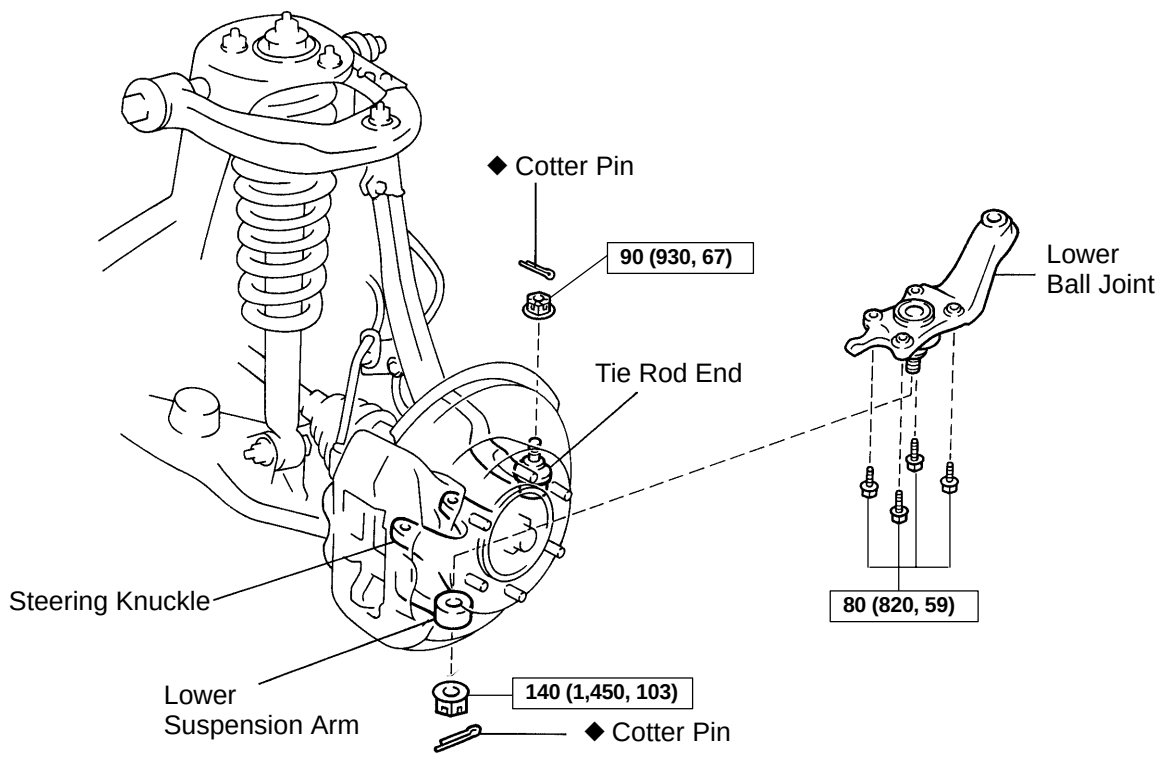

N·m (kgf·cm, ft·lbf) : Specified torque

◆ Non–reusable part

R13647

SA0AZ–02

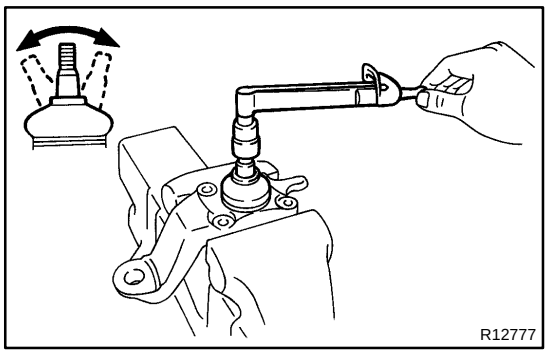

INSPECTION

INSPECT LOWER BALL JOINT FOR ROTATION CONDITION

(a) As shown in the illustration, flip the ball joint stud back and forth 5 times before installing the nut.

(b) Using a torque wrench, turn the nut continuously 1 turn each 2 – 4 seconds and take the torque reading on the 5th turn.

Turning torque:

0.1 – 2.5 N·m (1 – 25 kgf·cm, 1 – 22 in.·lbf)

SA0B0–02

INSTALLATION

Installation is in the reverse order of removal (See page SA–115).

HINT:

After installation, check the front wheel alignment (See page SA–10).

FRONT LOWER BALL JOINT (4WD and PRE RUNNER)

SA0AW–04

ON–VEHICLE INSPECTION

HINT:

Pre runner is the model described below.

RZN191L–TRPDKAB, RZN196L–CRPDKAB, RZN196L–PRPDKAB, VZN195L–CRPDKAB, VZN195L–PRPDKAB

INSPECT LOWER BALL JOINT EXCESSIVE PLAY ON–VEHICLE

(a) Remove the front wheel and install the hub nuts to the disc.

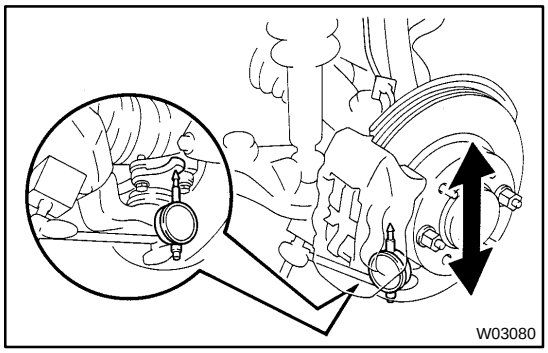

(b) Using a dial indicator, check the lower ball joint for excessive play when you push the hub nuts up and down with a force of 294 N (30 kgf, 66 lbf).

Maximum: 0.5 mm (0.020 in.)

SA0AY–02

REMOVAL

1. REMOVE FRONT WHEEL

Torque: 110 N·m (1,150 kgf·cm, 83 ft·lbf)

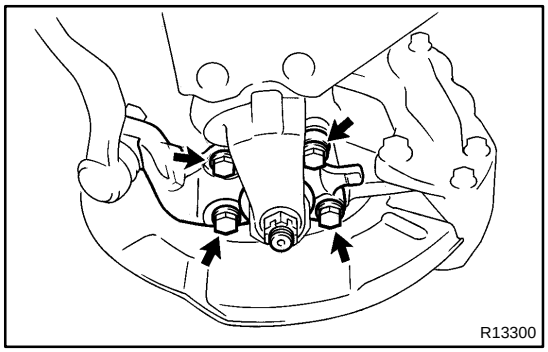

2. DISCONNECT TIE ROD END

(a) Loosen the 4 bolts.

Torque: 80 N·m (820 kgf·cm, 59 ft·lbf)

HINT:

Do not remove the bolts.

(b) Remove the cotter pin and nut from the tie rod end.

Torque: 90 N·m (930 kgf·cm, 67 ft·lbf)

HINT:

At the time of installation, if the holes for the cotter pin are not aligned, tighten the nut further up to 60°.

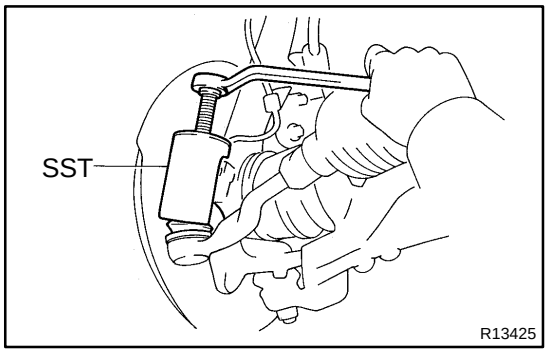

(c) Using SST, disconnect the tie rod end from the steering knuckle.

SST 09610–20012

3. REMOVE LOWER BALL JOINT

(a) Remove the cotter pin and nut from the lower ball joint.

Torque: 140 N·m (1,450 kgf·cm, 103 ft·lbf)

HINT:

At the time of installation, if the holes for the cotter pin are not aligned, tighten the nut further up to 60°.

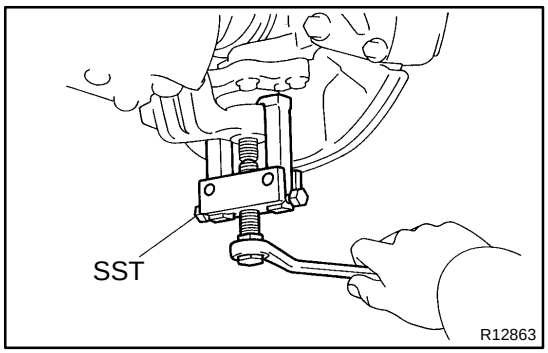

(b) Using SST, disconnect the lower ball joint from the lower suspension arm.

SST 09628–62011

HINT:

At the time of installation, face the cotter pin hole of the lower ball joint forward.

(c) Remove the 4 bolts.

(d) With lifting the upper suspension arm and steering knuckle, remove the lower ball joint.

HINT:

At the time of installation, after removing the lower ball joint, support the upper suspension arm and steering knuckle securely.

FRONT LOWER SUSPENSION ARM (4WD and PRE RUNNER)

SA0AJ–06

COMPONENTS

HINT:

Pre runner is the model described below.

RZN191L–TRPDKAB, RZN196L–CRPDKAB, PZN196L–PRPDKAB, VZN195L–CRPDKAB, VZN195–PRPDKAB

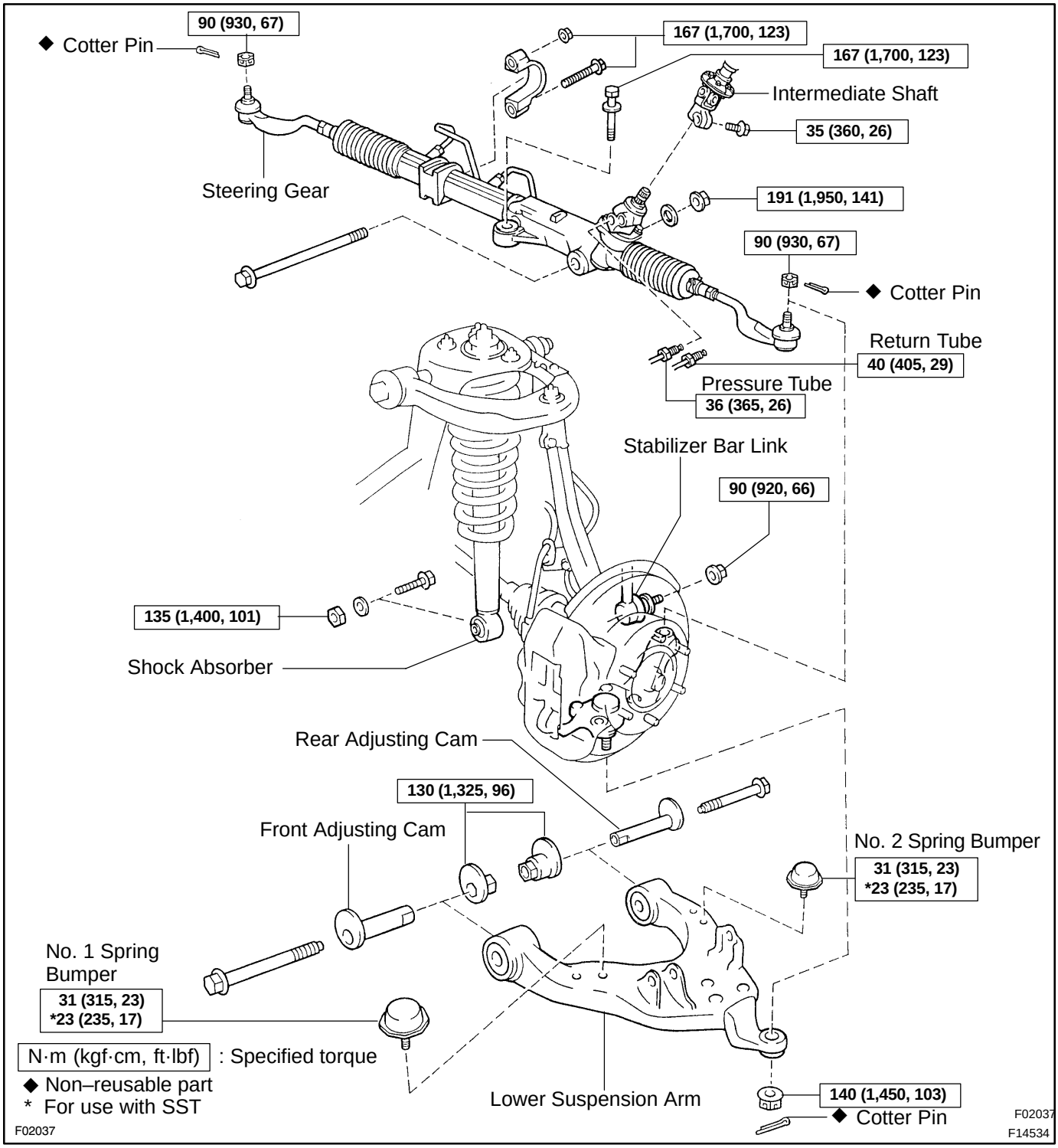

SA0AL–02

INSTALLATION

Installation is in the reverse order of removal (See page SA–99).

HINT:

After installation, check the front wheel alignment (See page SA–10).

SA1G9–02

REMOVAL

1. REMOVE FRONT WHEEL

Torque: 110 N·m (1,150 kgf·cm, 83 ft·lbf)

2. REMOVE STEERING GEAR ASSEMBLY

(See page SR–76)

3. DISCONNECT STABILIZER BAR LINK

Remove the nut and disconnect the stabilizer bar link from the lower suspension arm.

Torque:90 N·m (920 kgf·cm, 66 ft·lbf)

4. DISCONNECT SHOCK ABSORBER

(a) Remove the shock absorber lower nut and washer.

Torque: 135 N·m (1,400 kgf·cm, 101 ft·lbf)

HINT:

At the time of installation, after stabilizing the suspension, torque the nut.

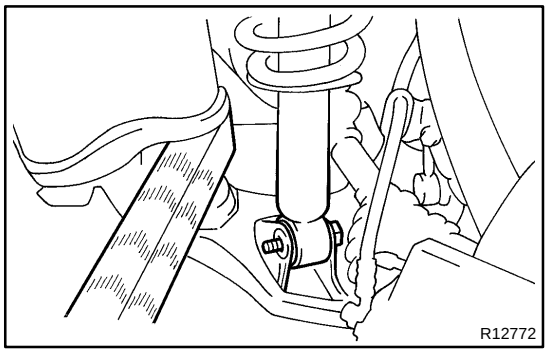

(b) With lowering the lower suspension arm, remove the bolt and disconnect the shock absorber.

5. DISCONNECT LOWER BALL JOINT

(a) Support the upper suspension arm and steering knuckle securely.

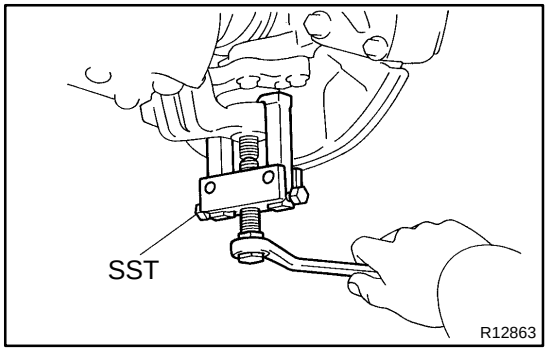

(b) Remove the cotter pin and nut from the lower ball joint.

Torque: 140 N·m (1,450 kgf·cm, 103 ft·lbf)

HINT:

At the time of installation, if the holes for the cotter pin are not aligned, tighten the nut further up to 60°.

(c) Using SST, disconnect the lower ball joint from the lower suspension arm.

SST 09628–62011

NOTICE:

Be careful not to damage the lower ball joint.

HINT:

At the time of installation, face the cotter pin hole of the lower ball joint forward.

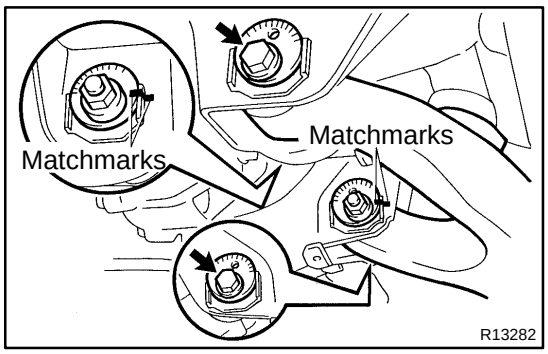

6. REMOVE LOWER SUSPENSION ARM

(a) Place matchmarks on the front and rear adjusting cams.

(b) Remove the nuts, adjusting cams, bolt and lower suspension arm.

Torque: 130 N·m (1,325 kgf·cm, 96 ft·lbf)

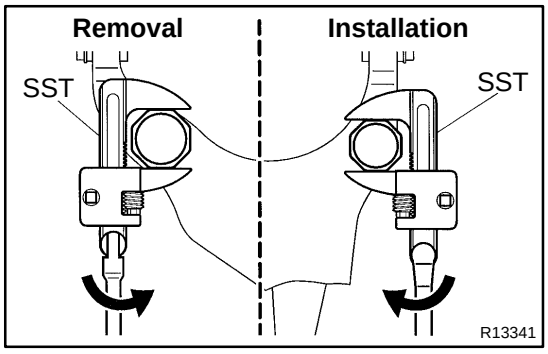

7. REMOVE NO. 1 AND NO. 2 SPRING BUMPERS

Using SST, remove the No. 1 and No. 2 spring bumpers.

SST 09922–10010

Torque: 23 N·m (235 kgf·cm, 17 ft·lbf)

HINT:

At the time of installation, use a torque wrench with a fulcrum length of 345 mm (13.58 in.).

FRONT LOWER SUSPENSION ARM AND COIL SPRING (2WD)

SA0AF–03

COMPONENTS

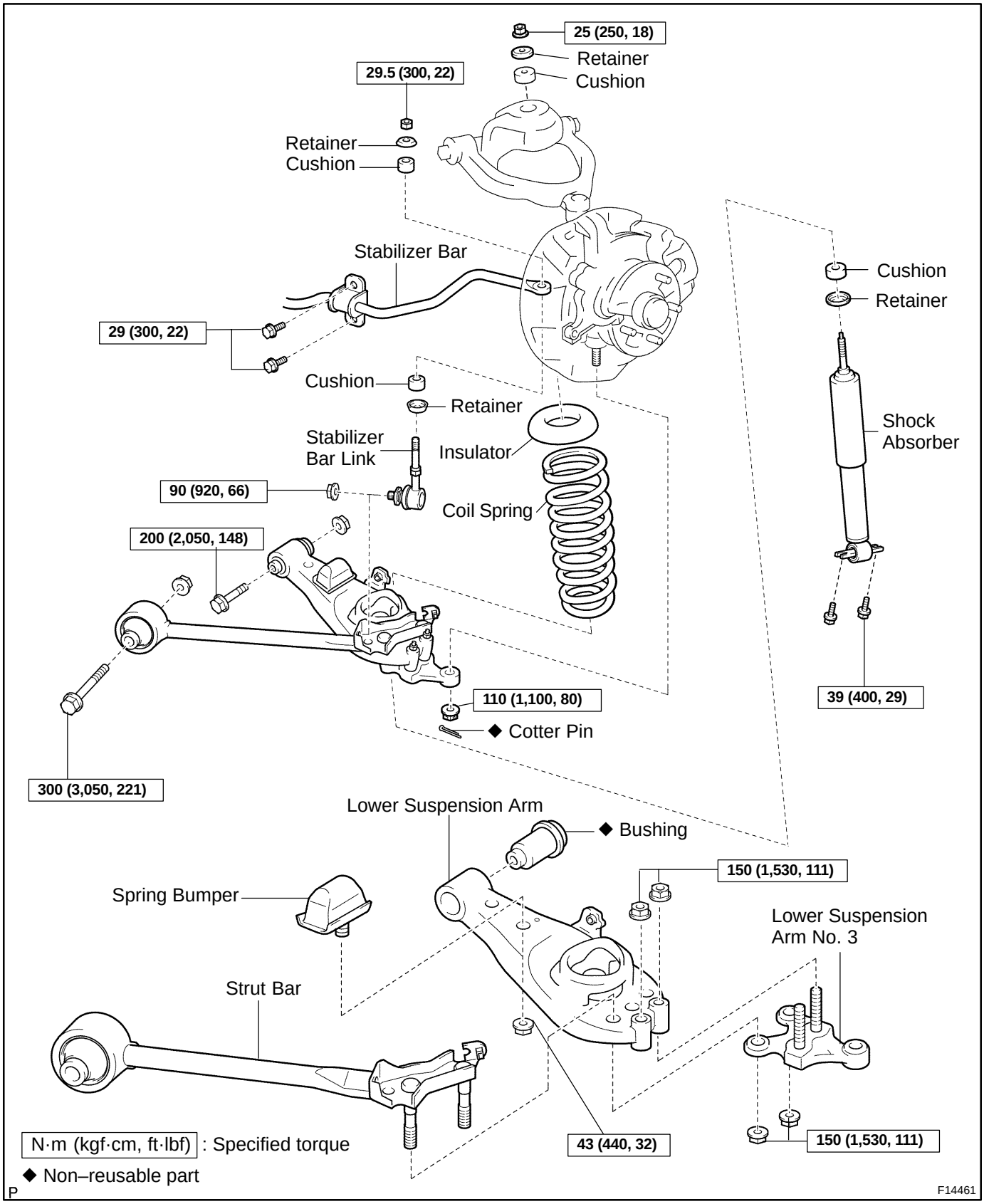

SA0AI–02

INSTALLATION

Installation is in the reverse order of removal (See page SA–94).

HINT:

After installation, check the front wheel alignment (See page SA–6).

SA0AG–03

REMOVAL

1. REMOVE FRONT WHEEL

Torque: 110 N·m (1,150 kgf·cm, 83 ft·lbf)

2. REMOVE SHOCK ABSORBER (See page SA–71)

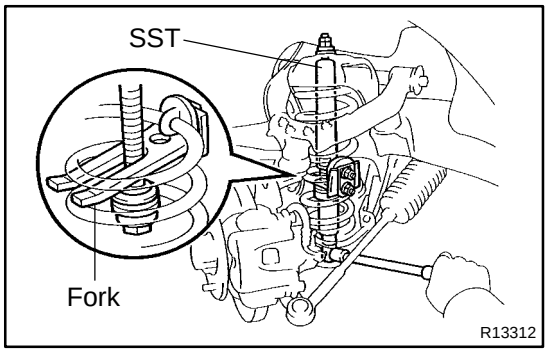

3. COMPRESS COIL SPRING

Using SST, compress the coil spring.

SST 09727–22011 (09727–23010, 09727–23020, 09727–23030, 09727–23040)

HINT:

When setting the fork, insert it to the center area of the coil spring and lower it by turning it along the coil spring.

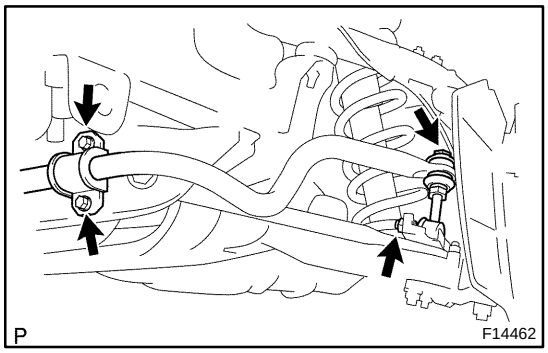

4. DISCONNECT STABILIZER BAR

(a) Remove the 2 nuts, stabilizer bar link, 2 retainer and 2 cushions.

Torque:

Stabilizer bar side: 29.5 N·m (300 kgf·cm, 22 ft·lbf)

Lower arm side: 90 N·m (920 kgf·cm, 66 ft·lbf)

(b) Remove the 2 stabilizer bar bracket set bolts.

Torque: 29 N·m (300 kgf·cm, 22 ft·lbf)

5. REMOVE LOWER SUSPENSION ARM WITH STRUT BAR

(a) Support the upper suspension arm and steering knuckle securely.

(b) Remove the cotter pin and nut.

Torque: 110 N·m (1,100 kgf·cm, 80 ft·lbf)

HINT:

At the time of installation, if the holes for the cotter pin are not aligned, tighten the nut further up to 60°.

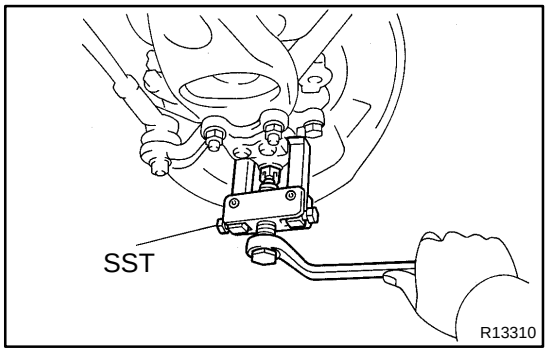

(c) Using SST, disconnect the lower ball joint from the lower suspension arm.

SST 09628–62011

NOTICE:

Be careful not to damage the lower ball joint boot.

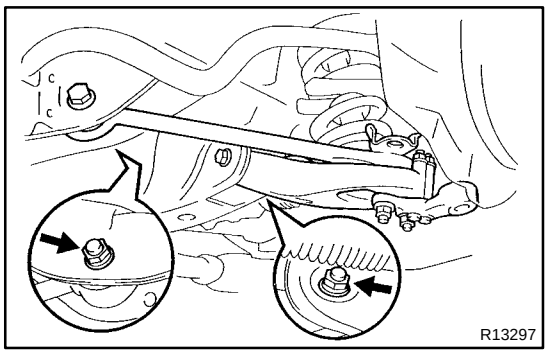

(d) Loosen the lower suspension arm set bolt and remove the nut.

Torque: 200 N·m (2,050 kgf·cm, 148 ft·lbf)

HINT:

At the time of installation, after stabilizing the suspension, torque the bolt.

(e) Loosen the strut bar front set bolt and remove the nut.

Torque: 300 N·m (3,050 kgf·cm, 221 ft·lbf)

HINT:

At the time of installation, after stabilizing the suspension, torque the bolt.

(f) Pull out the 2 bolts and remove the lower suspension arm with the strut bar.

6. REMOVE SST AND COIL SPRING

HINT:

At the time of installation, place the end of the coil spring and lower suspension arm seat in contact.

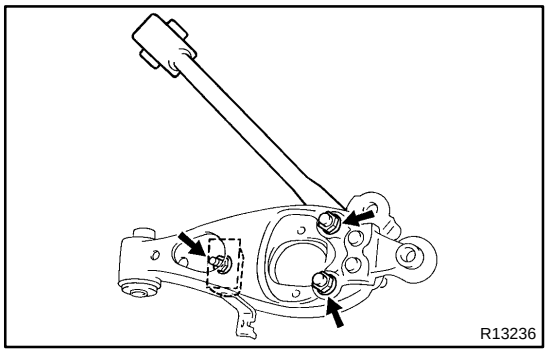

7. REMOVE STRUT BAR AND SPRING BUMPER

(a) Remove 2 nuts and strut bar from the lower suspension arm.

Torque: 150 N·m (1,530 kgf·cm, 111 ft·lbf)

(b) Remove the nut and spring bumper.

Torque: 43 N·m (440 kgf·cm, 32 ft·lbf)

8. REMOVE LOWER SUSPENSION ARM NO. 3

Remove the 2 nuts and lower suspension arm No. 3.

Torque: 150 N·m (1,530 kgf·cm, 111 ft·lbf)

SA0AH–02

REPLACEMENT

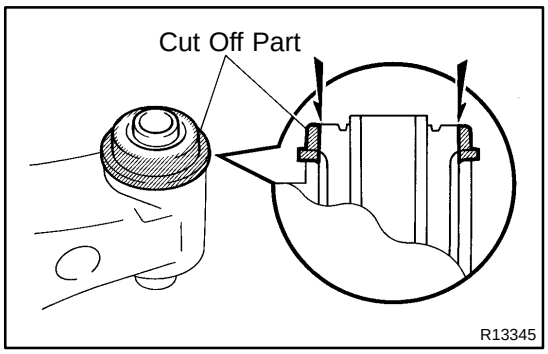

1. REMOVE BUSHING

(a) Cut off the shaded portion shown in the illustration to expose the edge of the tube.

NOTICE:

Be careful not to damage the edge of the arm tube.

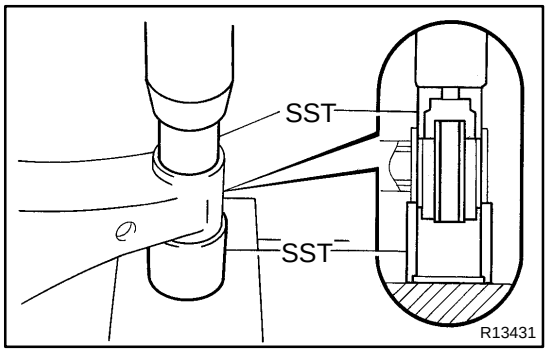

(b) Face the cut side downward and using SST and a press, remove the bushing.

SST 09710–30021 (09710–03071, 09710–03141)

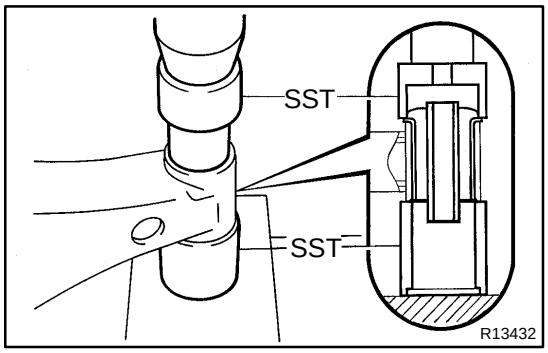

2. INSTALL NEW BUSHING

Using SST and a press, install a new bushing.

SST 09710–30021 (09710–03101, 09710–03141)

NOTICE:

Press in the bushing from the rear side.

FRONT SHOCK ABSORBER (2WD)

SA08V–03

COMPONENTS

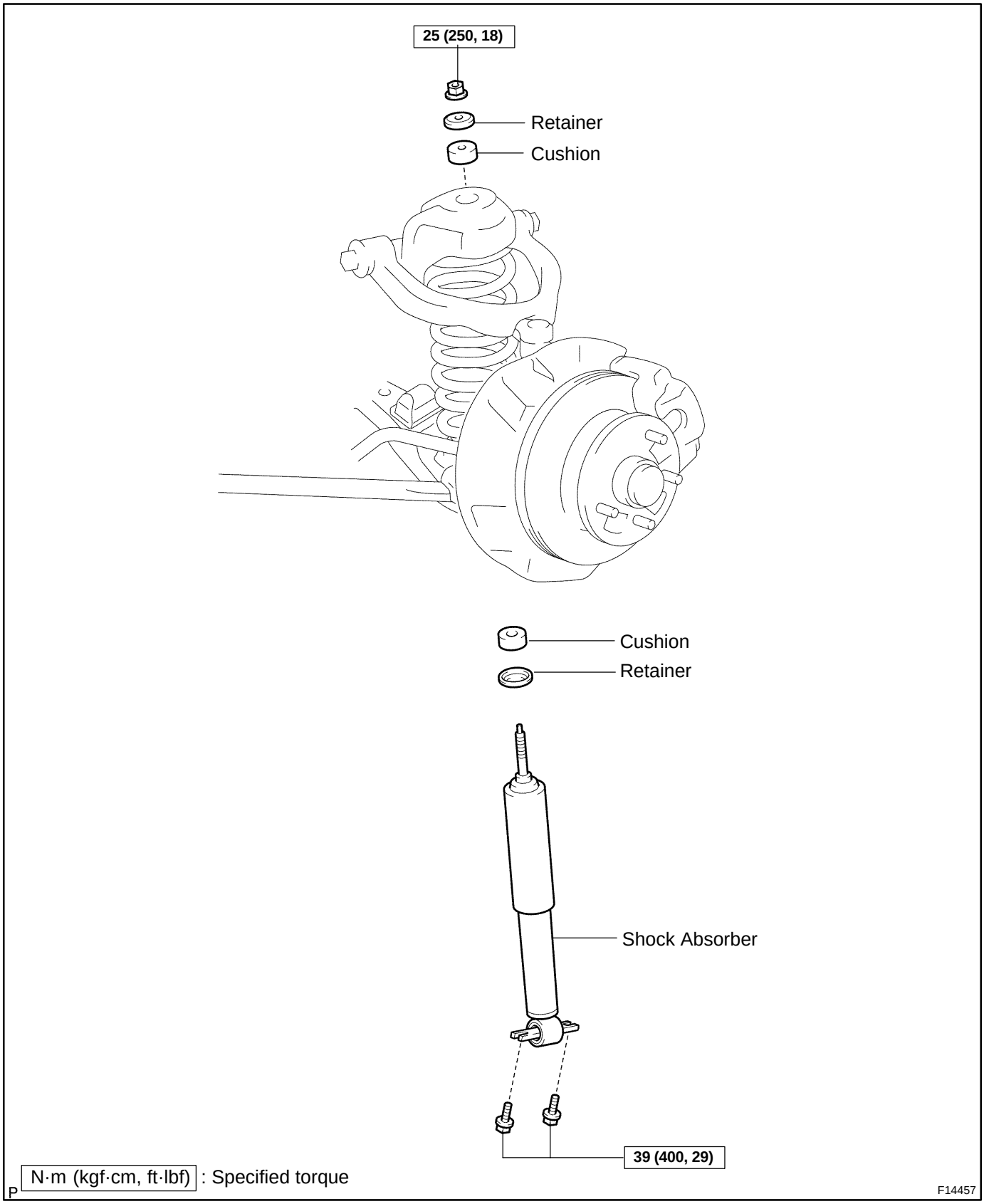

SA08Y–02

DISPOSAL

1. FULLY EXTEND SHOCK ABSORBER ROD

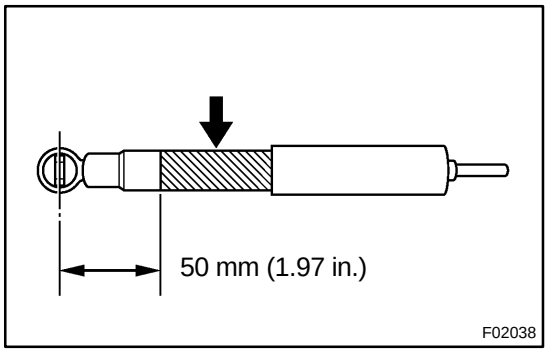

2. DRILL HOLE TO DISCHARGE GAS FROM CYLINDER

Using a drill, make a hole in the cylinder as shown in the illustration to discharge the gas inside.

CAUTION:

The discharged gas is harmless, but be careful of chips which may fly up when drilling.

SA08X–02

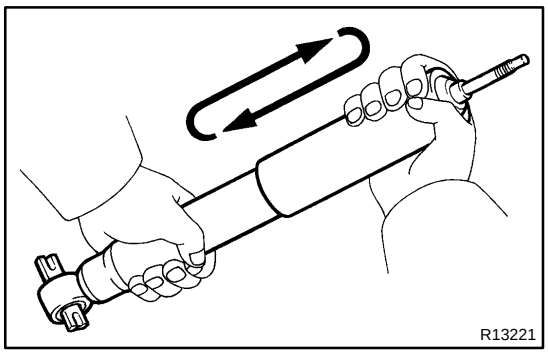

INSPECTION

INSPECT SHOCK ABSORBER

Compress and extend the shock absorber rod and check that there is no abnormal resistance or unusual operation sounds. If there is any abnormality, replace the shock absorber with a new one.

NOTICE:

When disposing the shock absorber, see DISPOSAL on page SA–73.

SA08Z–01

INSTALLATION

Installation is in the reverse order of removal (See page SA–71).

SA08W–02

REMOVAL

1. REMOVE FRONT WHEEL

Torque: 110 N·m (1,150 kgf·cm, 83 ft·lbf)

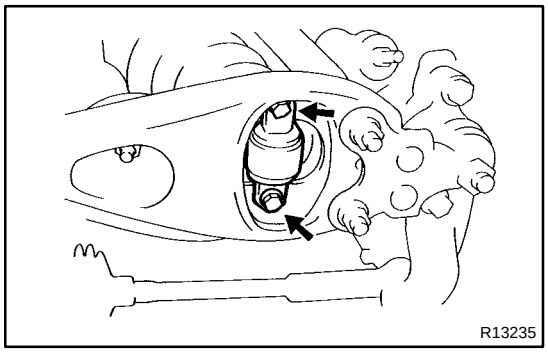

2. REMOVE SHOCK ABSORBER

(a) Remove the 2 bolts and disconnect the shock absorber from the lower suspension arm.

Torque: 39 N·m (400 kgf·cm, 29 ft·lbf)

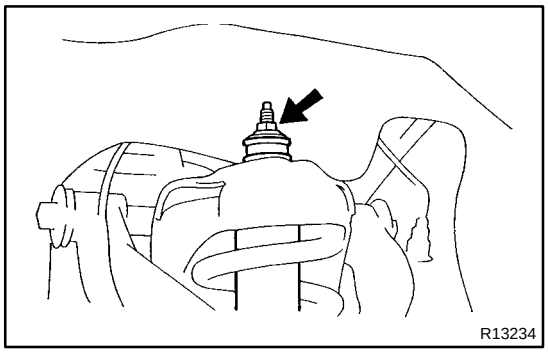

(b) Hold the shock absorber rod, then remove the nut, retainer, cushion and shock absorber.

Torque: 25 N·m (250 kgf·cm, 18 ft·lbf)

(c) Remove the cushion and retainer from the shock absorber.

FRONT SHOCK ABSORBER (4WD and PRE RUNNER)

SA09Z–05

COMPONENTS

HINT:

Pre runner is the model described below.

RZN191L–TRPDKAB, RZN196L–CRPDKAB, PZN196L–PRPDKAB, VZN195L–CRPDKAB, VZN195L–RPDKAB

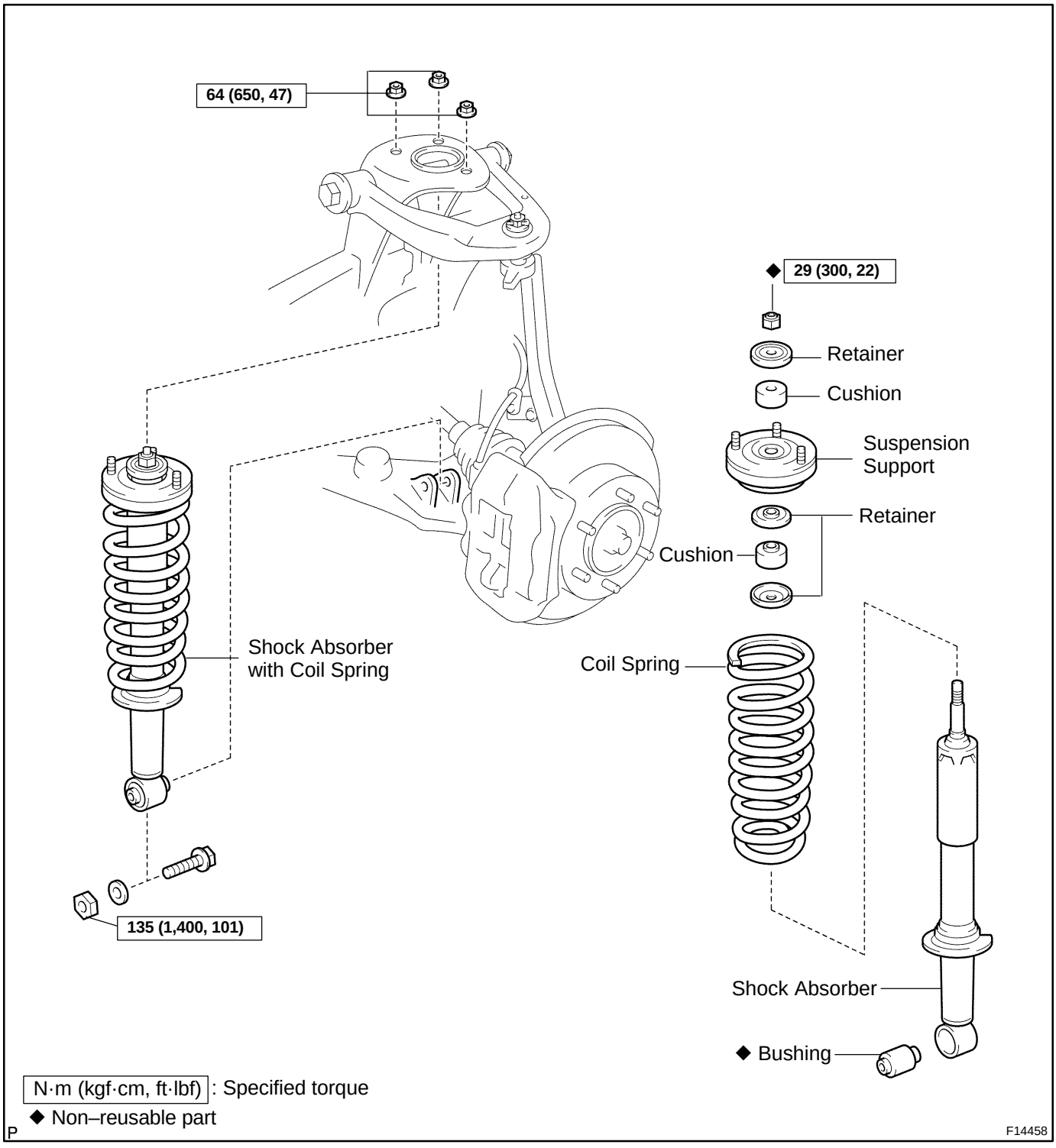

SA0A1–02

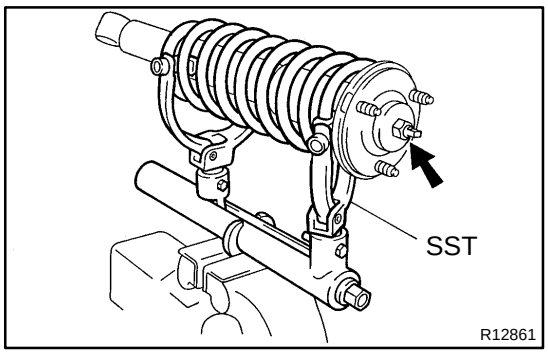

DISASSEMBLY

REMOVE SUSPENSION SUPPORT AND COIL SPRING

(a) Using SST, compress the coil spring until there is a clearance on both ends.
SST 09727–30021

NOTICE:

- **To avoid damage to SST, set SST arms to allow clearance to hold a 8–roll coil between them.**
- **Do not compress the coil spring more than necessary.**
- **Do not use an impact wrench. It will damage the SST.**

(b) Remove suspension support center nut.

(c) Remove the 3 retainers, 2 cushions, suspension support and coil spring.

SA0A3–02

DISPOSAL

1. FULLY EXTEND SHOCK ABSORBER ROD

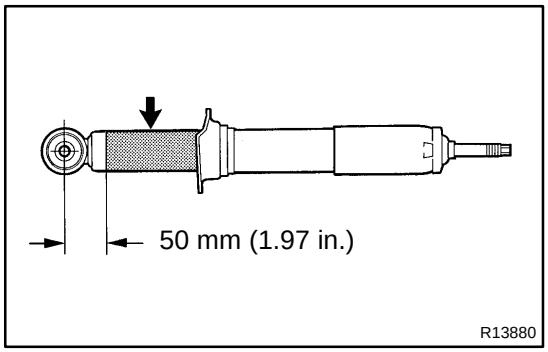

2. DRILL HOLE TO DISCHARGE GAS FROM CYLINDER

Using a drill, make a hole in the cylinder as shown in the illustration to discharge the gas inside.

CAUTION:

The discharged gas is harmless, but be careful of chips which may fly up when drilling.

SA0A2–02

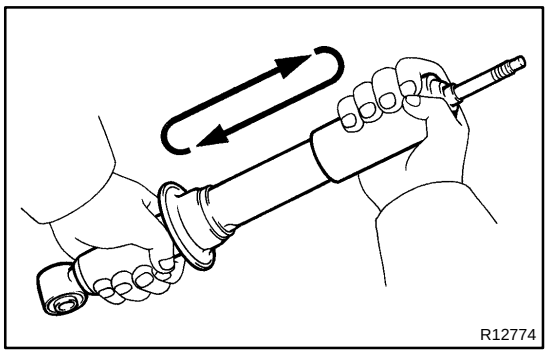

INSPECTION

INSPECT SHOCK ABSORBER

Compress and extend the shock absorber rod and check that there is no abnormal resistance or unusual operation sounds. If there is any abnormality, replace the shock absorber with a new one.

NOTICE:

When discarding the shock absorber, see DISPOSAL on page SA–79.

SA0A6–02

INSTALLATION

Installation is in the reverse order of removal (See page SA–76).

SA0A5–02

REASSEMBLY

1. INSTALL COIL SPRING TO SHOCK ABSORBER

(a) Using SST, compress the coil spring.
SST 09727–30021

NOTICE:

- **To avoid damage to SST, set SST arms to allow clearance to hold a 8–roll coil between them.**
- **Do not compress the coil spring more than necessary.**
- **Do not use an impact wrench. It will damage the SST.**

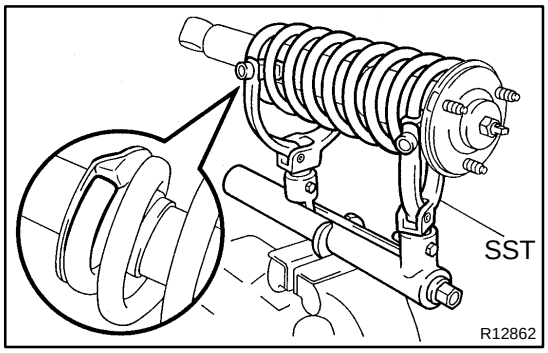

(b) Install the coil spring to the shock absorber.

HINT:

Fit the lower end of the coil spring into the gap of the spring seat of the shock absorber.

2. INSTALL SUSPENSION SUPPORT

(a) Install the 2 cushions, 3 retainers and suspension support to the rod.

(b) Temporarily tighten a new suspension support center nut.

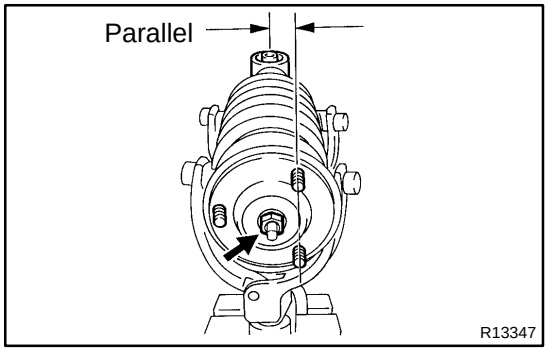

(c) Position the suspension support so that a line drawn between the 2 bolts would be parallel to the direction of the lower bushing.

(d) Remove the SST.
SST 09727–30021

HINT:

After removing the SST, again check the direction of the suspension support.

(e) Torque the suspension center nut.
Torque: 29 N·m (300 kgf·cm, 22 ft·lbf)

SA0A0–02

REMOVAL

1. REMOVE FRONT WHEEL

Torque: 110 N·m (1,150 kgf·cm, 83 ft·lbf)

2. DISCONNECT SHOCK ABSORBER FROM LOWER SUSPENSION ARM

(a) Remove the shock absorber lower nut and washer.

NOTICE:

Do not remove the bolt.

Torque: 135 N·m (1,400 kgf·cm, 101 ft·lbf)

HINT:

At the time of installation, after stabilizing the suspension, torque the nut.

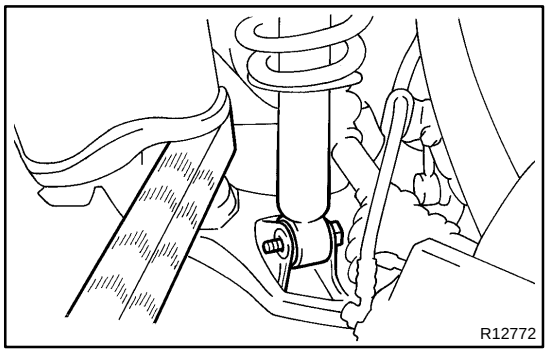

(b) With lowering the lower suspension arm, remove the bolt and disconnect the shock absorber.

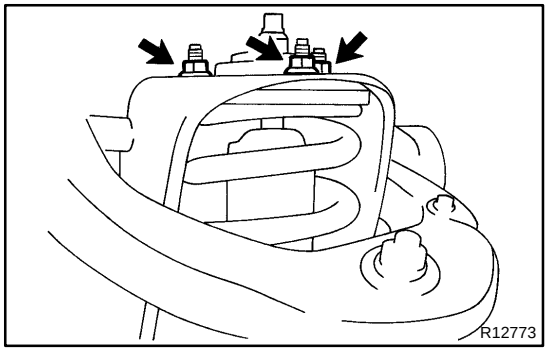

3. REMOVE SHOCK ABSORBER WITH COIL SPRING

Remove the 3 nuts and shock absorber with the coil spring.

Torque: 64 N·m (650 kgf·cm, 47 ft·lbf)

SA0A4–02

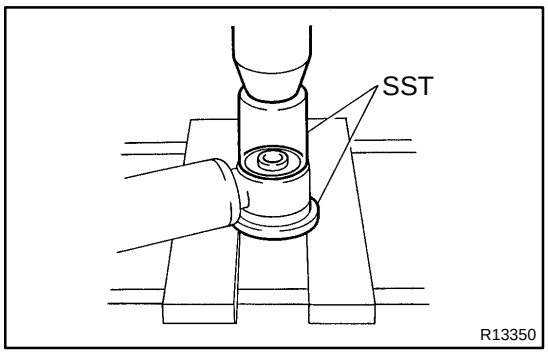

REPLACEMENT

1. REMOVE BUSHING

Using SST and a press, remove the bushing.

SST 09506–35010, 09632–36010

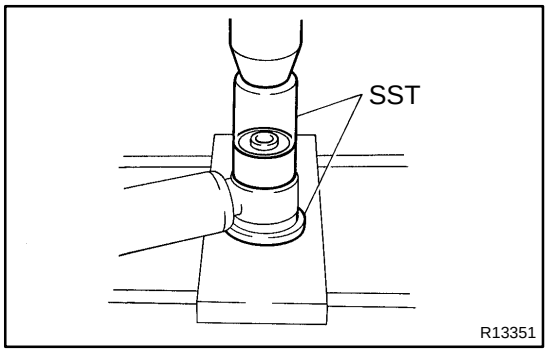

2. INSTALL NEW BUSHING

Using SST and a press, install a new bushing.

SST 09506–35010, 09632–36010

HINT:

Do not apply grease or oil to the bushing.

FRONT STABILIZER BAR (2WD)

SA0B1–03

COMPONENTS

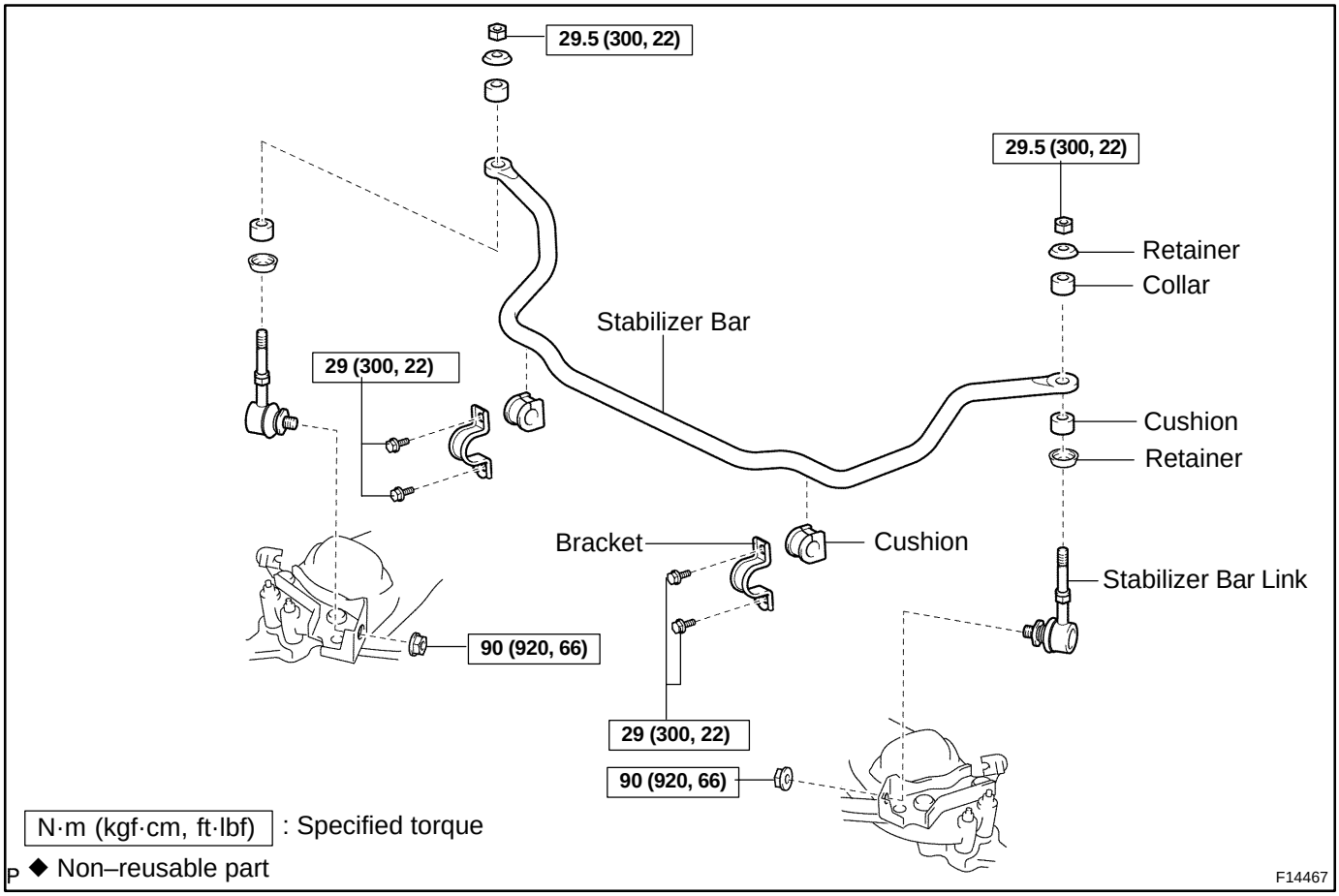

SA0B6–02

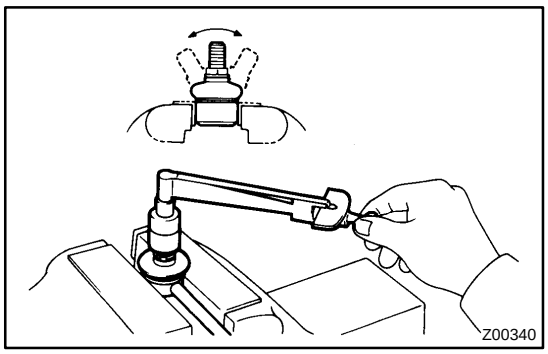

INSPECTION

INSPECT STABILIZER BAR LINK BALL JOINT FOR ROTATION CONDITION

(a) As shown in the illustration, flip the ball joint stud back and forth 5 times before installing the nut.

(b) Using a torque wrench, turn the nut continuously 1 turn each 2 – 4 seconds and take the torque reading on the 5th turn.

Turning torque:
0.05 – 2.0 N·m (0.5 – 20 kgf·cm, 0.4 – 17 in.·lbf)

SA0B3–01

INSTALLATION

Installation is in the reverse order of removal (See page SA–119).

SA0B2–03

REMOVAL

1. REMOVE FRONT WHEELS

Torque: 110 N·m (1,150 kgf·cm, 83 ft·lbf)

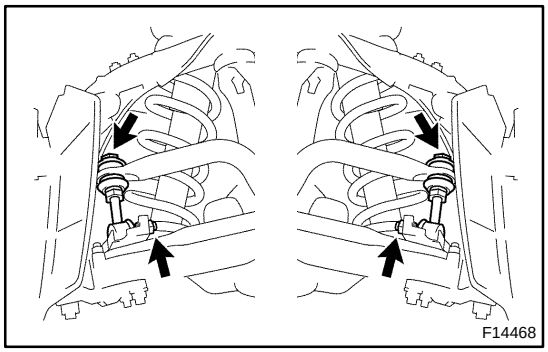

2. REMOVE STABILIZER BAR

(a) Remove the 2 nuts, stabilizer bar link, 2 retainers and 2 bushings.

Torque:

Stabilizer bar side: 29.5 N·m (300 kgf·cm, 22 ft·lbf)

Lower arm side: 90 N·m (920 kgf·cm, 66 ft·lbf)

HINT:

If the ball joint stud turns together with the nut, use a hexagon wrench to hold the stud.

(b) Employ the same manner described above to the other side.

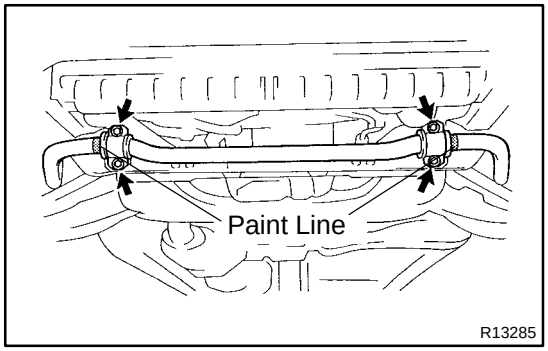

(c) Remove the 4 bolts and stabilizer bar with the cushions and brackets.

Torque: 29 N·m (300 kgf·cm, 22 ft·lbf)

(d) Remove the brackets and cushions from the stabilizer bar.

HINT:

At the time of installation, install the cushion to the portion inside the paint line.

FRONT STABILIZER BAR (4WD and PRE RUNNER)

SA0B4–06

COMPONENTS

HINT:

Pre runner is the model described below.

RZN191L–TRPDKAB, RZN196L–CRPDKAB, PZN196L–PRPDKAB, VZN195L–CRPDKAB, VZN195L–PRPDKAB

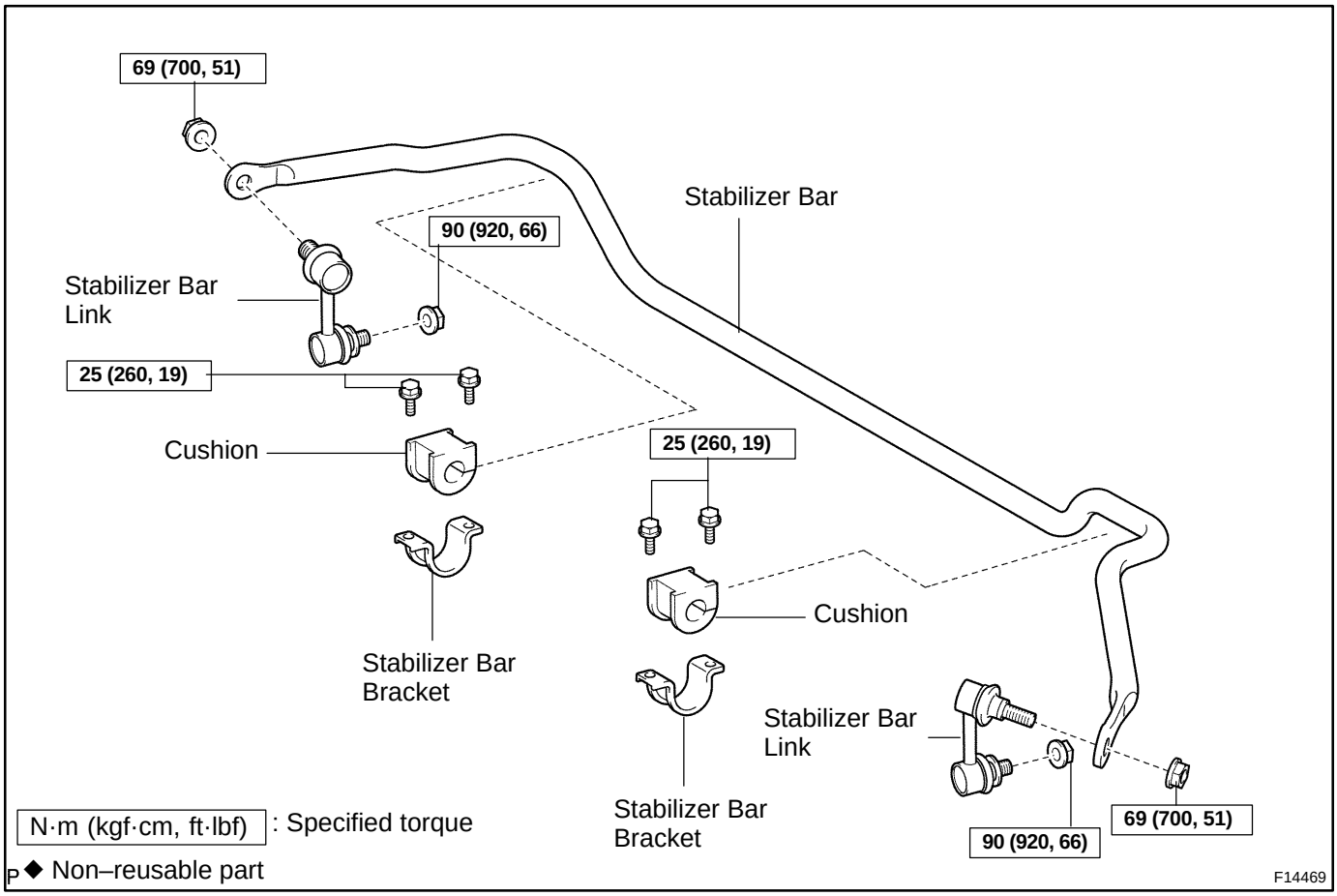

SA0B6–02

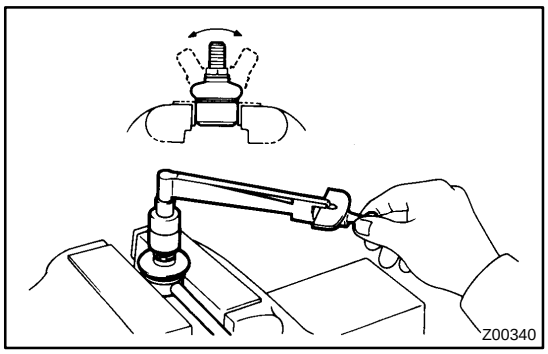

INSPECTION

INSPECT STABILIZER BAR LINK BALL JOINT FOR ROTATION CONDITION

(a) As shown in the illustration, flip the ball joint stud back and forth 5 times before installing the nut.

(b) Using a torque wrench, turn the nut continuously 1 turn each 2 – 4 seconds and take the torque reading on the 5th turn.

Turning torque:
0.05 – 2.0 N·m (0.5 – 20 kgf·cm, 0.4 – 17 in.·lbf)

SA0B7–02

INSTALLATION

Installation is in the reverse order of removal (See page SA–123).

SA22T–01

REMOVAL

1. REMOVE FRONT WHEELS

Torque: 110 N·m (1,150 kgf·cm, 83 ft·lbf)

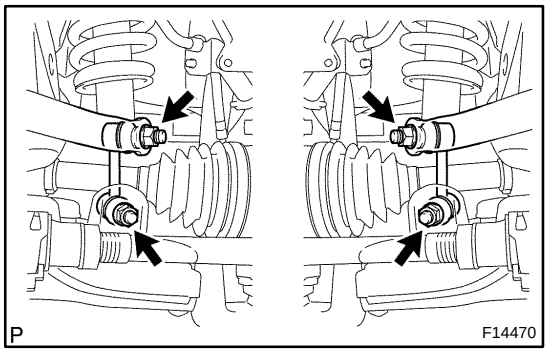

2. REMOVE STABILIZER BAR LINKS

(a) Remove the 2 nuts and stabilizer bar link from the lower suspension arm and stabilizer.

Torque: 90 N·m (920 kgf·cm, 66 ft·lbf)

HINT:

If the ball joint stud turns together with the nut, use a hexagon wrench to hold the stud.

(b) Employ the same manner described above to the other side.

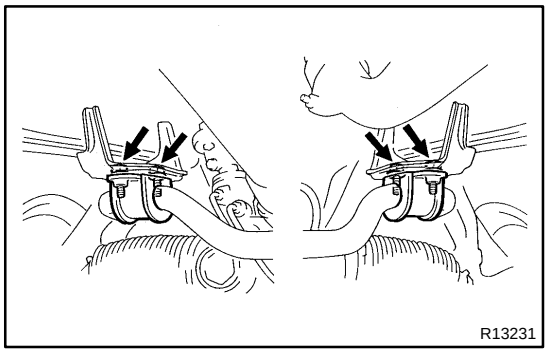

3. REMOVE STABILIZER BAR

(a) Remove the 4 bracket set bolts and stabilizer bar with the cushions and brackets.

Torque: 25 N·m (260 kgf·cm, 19 ft·lbf)

(b) Remove the 2 brackets and cushions from the stabilizer bar.

FRONT UPPER BALL JOINT (4WD and PRE RUNNER)

SA1GA–02

COMPONENTS

HINT:

Pre runner is the model described below.

RZN191L–TRPDKAB, RZN196L–CRPDKAB, PZN196L–PRPDKAB, VZN195L–CRPDKAB, VZN195L–PRPDKAB

4WD

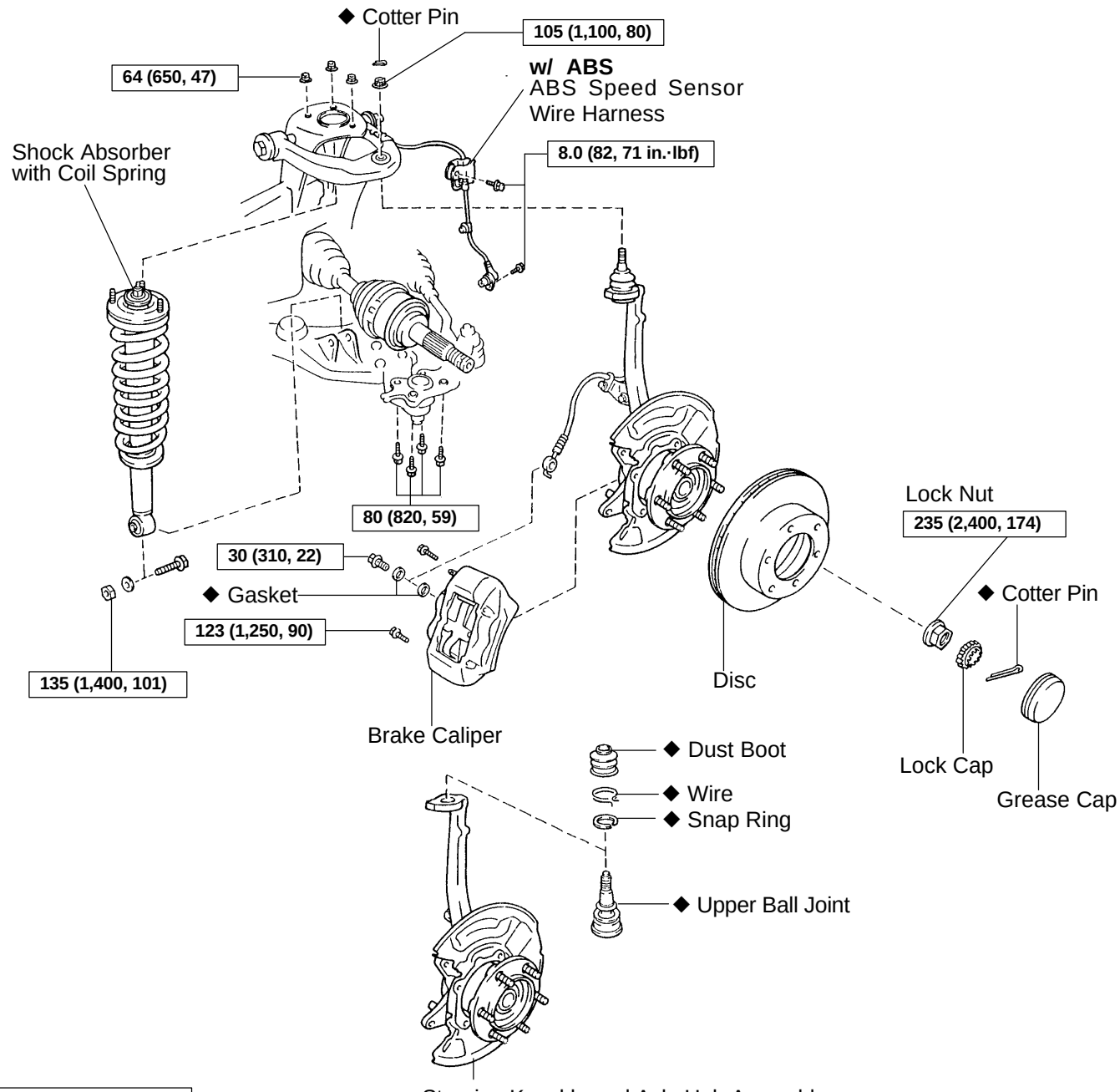

N·m (kgf·cm, ft·lbf) : Specified torque

◆ Non–reusable part

F14479

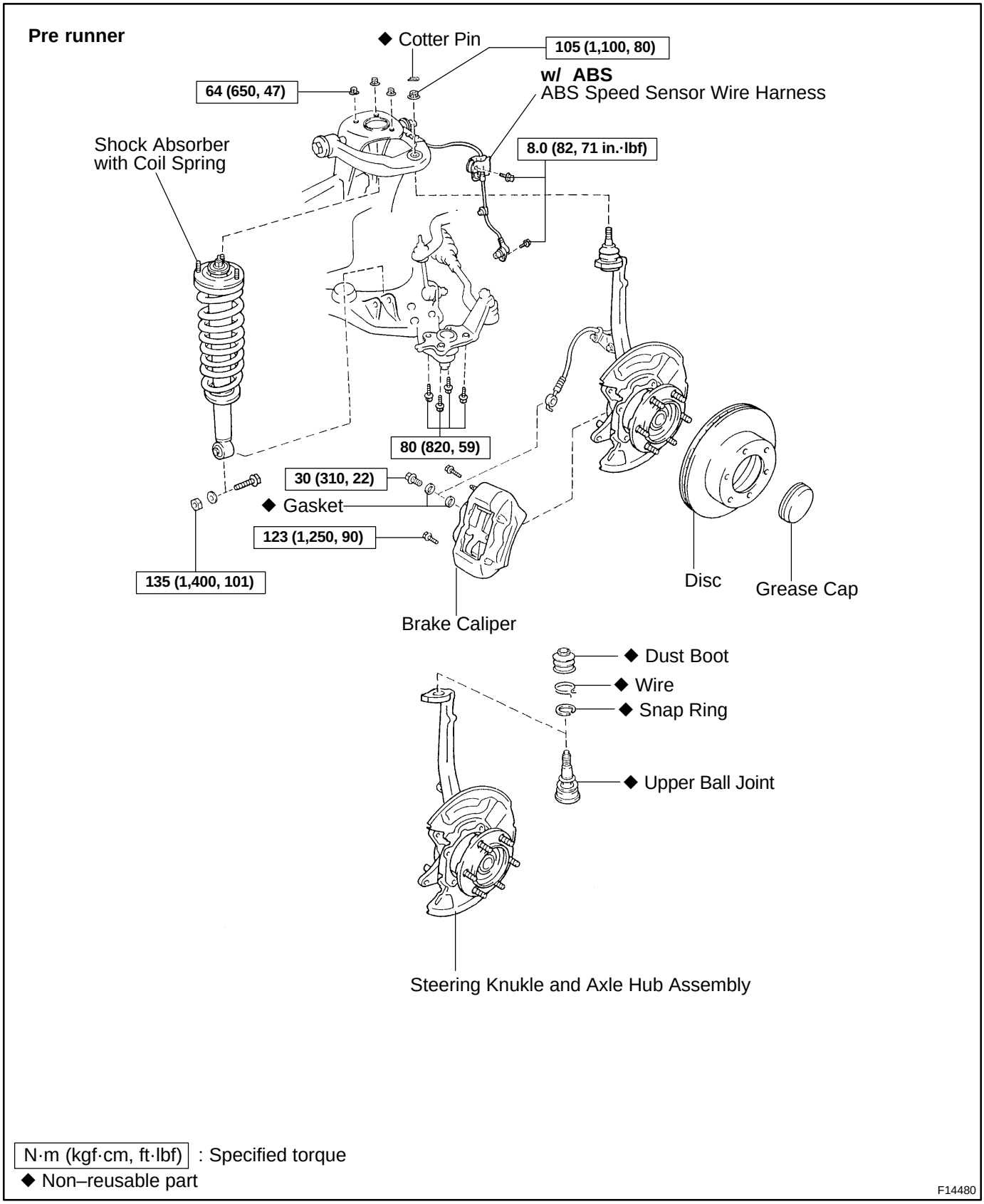
Pre runner
◆ Cotter Pin
105 (1,100, 80)
w/ ABS
ABS Speed Sensor Wire Harness
64 (650, 47)
Shock Absorber with Coil Spring
8.0 (82, 71 in.·lbf)
80 (820, 59)
30 (310, 22)
◆ Gasket
123 (1,250, 90)
135 (1,400, 101)
Disc
Grease Cap
Brake Caliper
◆ Dust Boot
◆ Wire
◆ Snap Ring
◆ Upper Ball Joint
Steering Knukle and Axle Hub Assembly
N·m (kgf·cm, ft·lbf) : Specified torque
◆ Non–reusable part
F14480

SA0AO–02

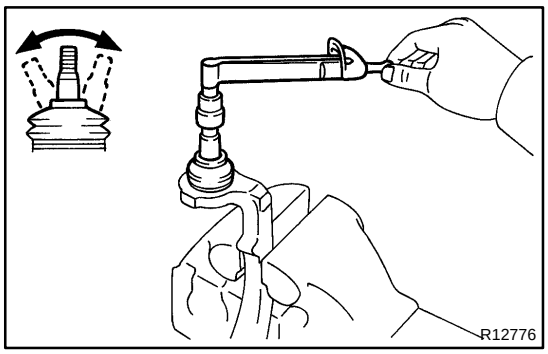

INSPECTION

INSPECT UPPER BALL JOINT FOR ROTATION CONDITION

(a) As shown in the illustration, flip the ball joint stud back and forth 5 times, before installing the nut.

(b) Using a torque wrench, turn the nut continuously 1 turn each 2 – 4 seconds and take the torque reading on the 5th turn.

Turning torque:
0.7 – 4.4 N·m (7 – 45 kgf·cm, 6 – 39 in.·lbf)

SA0AQ–02

INSTALLATION

INSTALL STEERING KNUCKLE WITH AXLE HUB (See page SA–30)

SA0AN–02

REMOVAL

REMOVE STEERING KNUCKLE WITH AXLE HUB (See page SA–24)

SA0AP–03

REPLACEMENT

1. REMOVE UPPER BALL JOINT

(a) Remove the wire and boot.

(b) Using a snap ring expander, remove the snap ring.

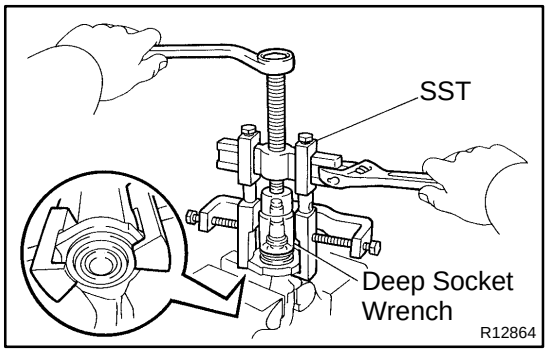

(c) Using SST and a deep socket wrench, remove the upper ball joint.

SST 09950–40011 (09951–04010, 09952–04010, 09953–04020, 09954–04010, 09955–04031, 09957–04010, 09958–04011)

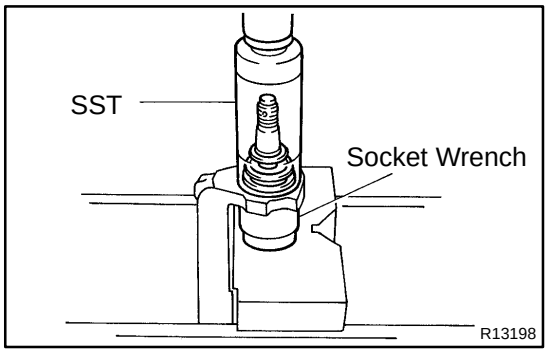

2. INSTALL UPPER BALL JOINT

(a) Using SST and a socket wrench, install a new ball joint.

SST 09309–37010

(b) Using a snap ring expander, install a new snap ring.

(c) Install a new boot and fix it with a new wire.

HINT:

Use the grease supplied in the kit.

FRONT UPPER SUSPENSION ARM (2WD)

SA0A7–03

COMPONENTS

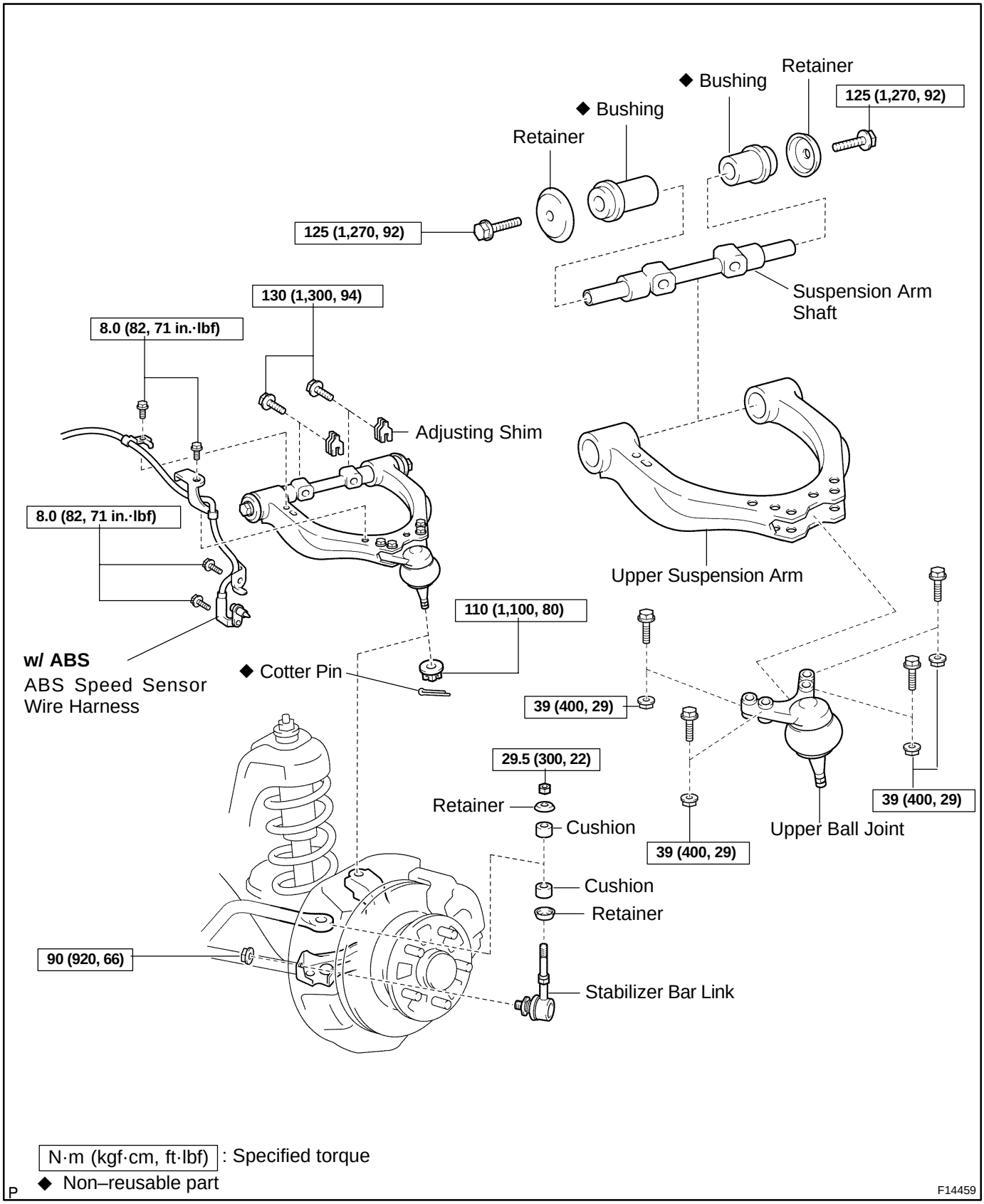

SA0A9–02

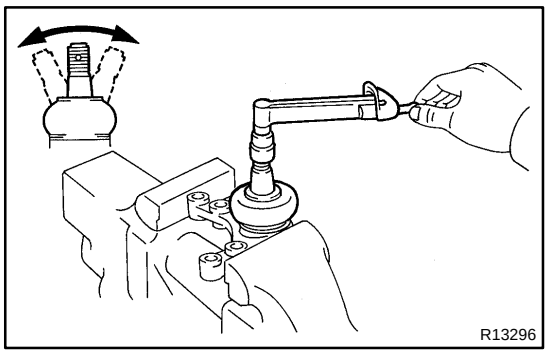

INSPECTION

INSPECT UPPER BALL JOINT FOR ROTATION CONDITION

(a) As shown in the illustration, flip the ball joint stud back and forth 5 times, before installing the nut.

(b) Using a torque wrench, turn the nut continuously 1 turn each 2 – 4 seconds and take the torque reading on the 5th turn.

Turning torque:
0.5 – 3.5 N·m (5 – 35 kgf·cm, 4 – 30 in.·lbf)

SA0AB–02

INSTALLATION

Installation is in the reverse order of removal (See page SA–84).

HINT:

After installation, check the front wheel alignment (See page SA–6) and ABS speed sensor signal (See page DI–534).

SA1G8–02

REMOVAL

1. REMOVE FRONT WHEEL

Torque: 110 N·m (1,150 kgf·cm, 83 ft·lbf)

2. w/ ABS:

REMOVE ABS SPEED SENSOR AND WIRE HARNESS CLAMP

(a) Remove the bolt and ABS speed sensor from the steering knuckle.

Torque: 8.0 N·m (82 kgf·cm, 71 in.·lbf)

(b) Remove the 3 bolts and ABS speed sensor wire harness clamps from the upper suspension arm and steering knuckle.

Torque: 8.0 N·m (82 kgf·cm, 71 in.·lbf)

3. REMOVE STABILIZER BAR LINK

Remove the 2 nuts, stabilizer bar link, 2 retainers and 2 bushings.

HINT:

If the ball joint stud turns together with the nut, use a hexagon wrench to hold the stud.

Torque:

Stabilizer bar side: 29.5 N·m (300 kgf·cm, 22 ft·lbf)

Lower arm side: 90 N·m (920 kgf·cm, 66 ft·lbf)

4. DISCONNECT UPPER BALL JOINT

(a) Support the lower suspension arm with a jack.

(b) Remove the cotter pin and loosen the nut.

Torque: 110 N·m (1,100 kgf·cm, 80 ft·lbf)

HINT:

At the time of installation, if the holes for the cotter pin are not aligned, tighten the nut further up to 60°.

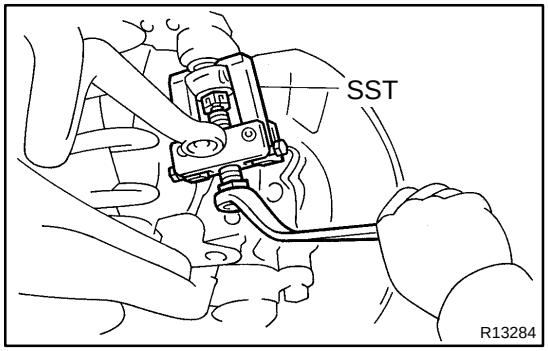

(c) Using SST, disconnect the steering knuckle from the upper ball joint.

SST 09628–62011

(d) Remove the nut and disconnect the steering knuckle from upper ball joint.

NOTICE:

Do not remove the jack.

HINT:

Support the steering knuckle securely.

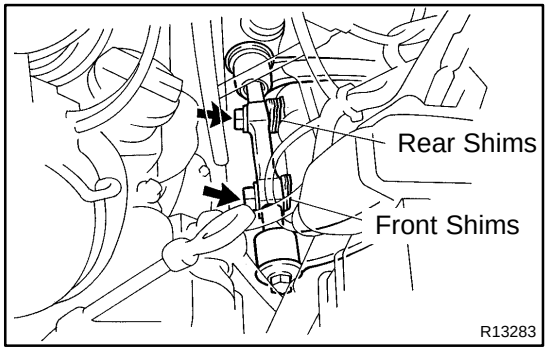

5. REMOVE UPPER SUSPENSION ARM

(a) Loosen the 2 bolts and remove the front and rear alignment adjusting shims.

Torque: 130 N·m (1,300 kgf·cm, 94 ft·lbf)

HINT:

Make a note of the number and thickness of the front and rear shims.

(b) Remove the 2 bolts, retainers and upper suspension arm.

6. REMOVE UPPER BALL JOINT

Remove the 4 bolts, nuts and upper ball joint from the upper suspension arm.

Torque: 39 N·m (400 kgf·cm, 29 ft·lbf)

SA0AA–03

REPLACEMENT

REPLACE UPPER SUSPENSION ARM SHAFT AND BUSHINGS

(a) Remove the lock bolts.
Remove the 2 bolts and retainers from the arm shaft.

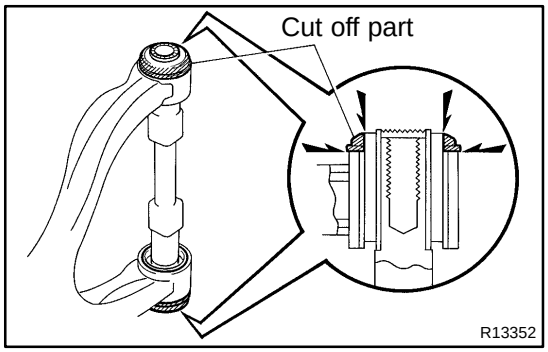

(b) Remove bushings.
Cut off the shaded portions shown in the illustration to expose the edge of the tubes.

NOTICE:
Be careful not to damage the edge of arm tubes.

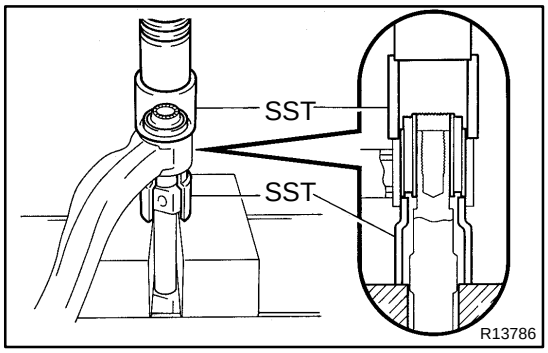

(1) Using SST and a press, press down the suspension arm tube until it touches SST.
SST 09710–30021 (09710–03031, 09710–03141)

NOTICE:
Do not press the tube excessively.

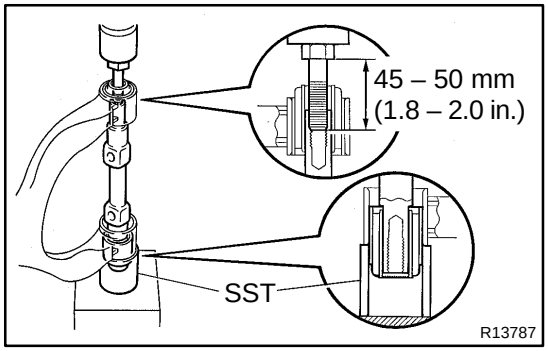

(2) Temporarily install a bolt to the arm shaft on the other side.
Bolt length: 45 – 50 mm (1.8 – 2.0 in.)

(3) Using SST and a press, remove the bushing and arm shaft.
SST 09710–30021 (09710–03141)

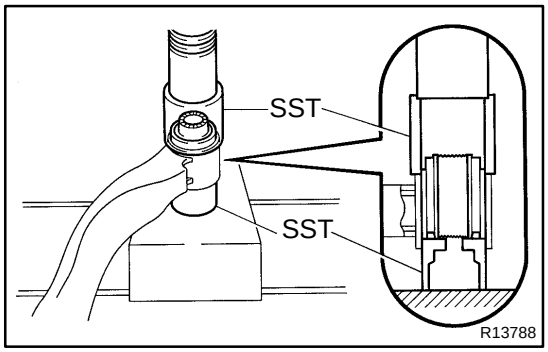

(4) Using SST and a press, remove the other bushing.
SST 09710–30021 (09710–03071, 09710–03141)

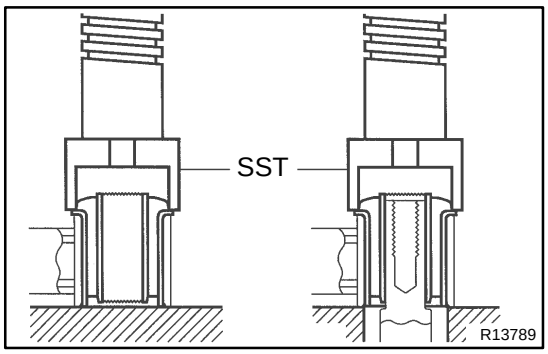

(c) Install new bushings.
(1) Using SST and a press, install a new bushing.
SST 09710–30021 (09710–03101)
(2) Place the arm shaft on the bushing.
(3) Using SST and a press, install another new bushing.
SST 09710–30021 (09710–03101)

HINT:
Pass the arm shaft through the bushing.

(4) Check that the arm shaft turns easily, and check that there is no axial play in the arm shaft.

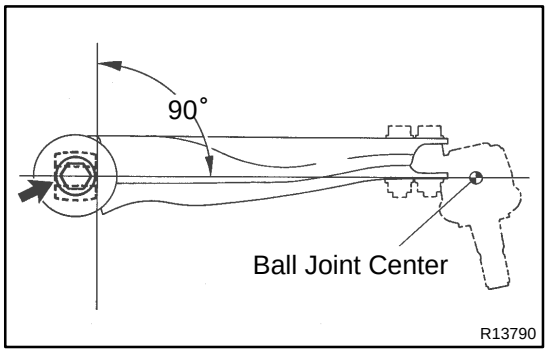

(d) Install the lock bolts.
Position the arm shaft so that the frame installation surface is at 90° to the suspension arm as shown, and torque the lock bolts.
Torque: 125 N·m (1,270 kgf·cm, 92 ft·lbf)

FRONT UPPER SUSPENSION ARM (4WD and PRE RUNNER)

SA0AC–06

COMPONENTS

HINT:

Pre runner is the model described below.

RZN191L–TRPDKAB, RZN196L–CRPDKAB, PZN196L–PRPDKAB, VZN195L–CRPDKAB, VZN195L–PRPDKAB

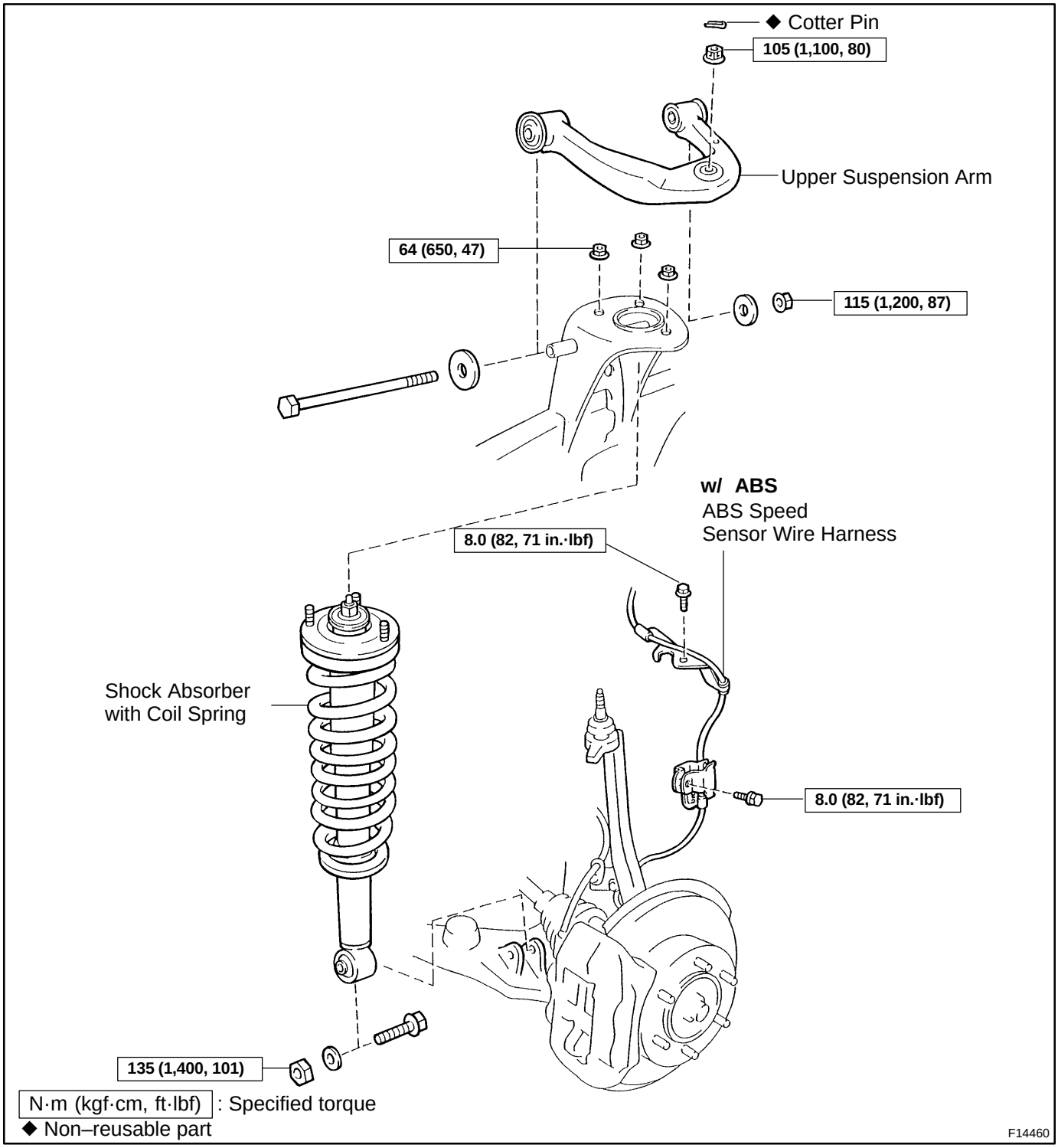

SA0AE–02

INSTALLATION

Installation is in the reverse order of removal (See page SA–91).

HINT:

After installation, check the front wheel alignment (See page SA–10).

SA0AD–03

REMOVAL

1. REMOVE SHOCK ABSORBER WITH COIL SPRING (See page SA–79)

2. w/ ABS:

DISCONNECT ABS SPEED SENSOR WIRE HARNESS CLAMP

Remove the 2 bolts and ABS speed sensor wire harness clamps from the steering knuckle and upper suspension arm.

Torque: 8.0 N·m (82 kgf·cm, 71 in.·lbf)

3. DISCONNECT UPPER BALL JOINT

(a) Remove the cotter pin and loosen the nut.

Torque: 105 N·m (1,100 kgf·cm, 80 ft·lbf)

HINT:

At the time of installation, if the hole for the cotter pin are not aligned, tighten the nut further up to 60°.

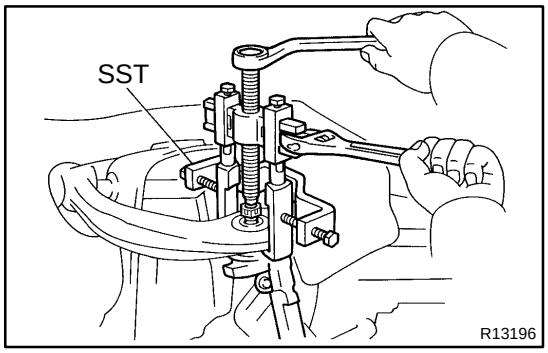

(b) Using SST, disconnect the upper ball joint.

SST 09950–40011 (09951–04010, 09952–04010, 09953–04020, 09954–04010, 09955–04031, 09958–04011)

(c) Support the steering knuckle securely.

(d) Remove the nut.

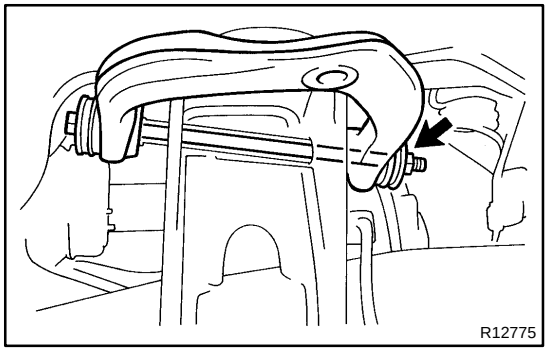

4. REMOVE UPPER SUSPENSION ARM

Remove the nut, bolt, 2 washers and upper suspension arm.

Torque: 115 N·m (1,200 kgf·cm, 87 ft·lbf)

HINT:

At the time of installation, after stabilizing the suspension, torque the nut.

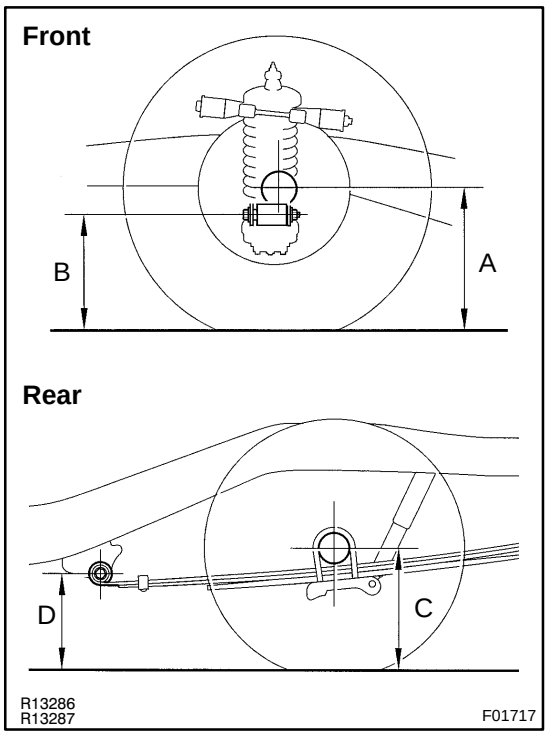

FRONT WHEEL ALIGNMENT (2WD)

SA092–04

INSPECTION

1. MEASURE VEHICLE HEIGHT (See page SS–63)

Measuring points:

A: Ground clearance of spindle center

B: Ground clearance of lower suspension arm bolt center

C: Ground clearance of rear axle shaft center

D: Ground clearance of leaf spring front hanger pin bolt center

NOTICE:

Before inspecting the wheel alignment, adjust the vehicle height to the specified value.

If the vehicle height is not the specified value, try to adjust it by pushing down on or lifting the body.

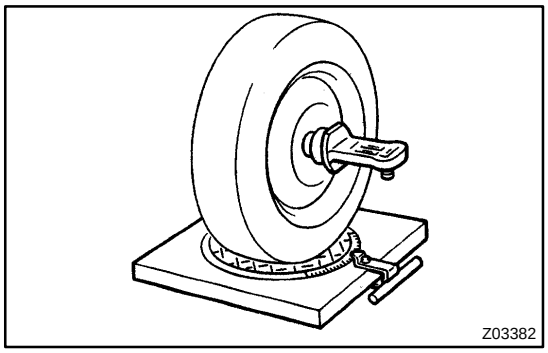

2. INSTALL CAMBER–CASTER–KINGPIN GAUGE OR POSITION VEHICLE ON WHEEL ALIGNMENT TESTER

Follow the specific instructions of the equipment manufacturer.

3. INSPECT CAMBER, CASTER AND STEERING AXIS INCLINATION (See page SS–63)

If the steering axis inclination is not within the specified value, after the camber and caster have been correctly adjusted, recheck the steering knuckle and front wheel for bearing or looseness.

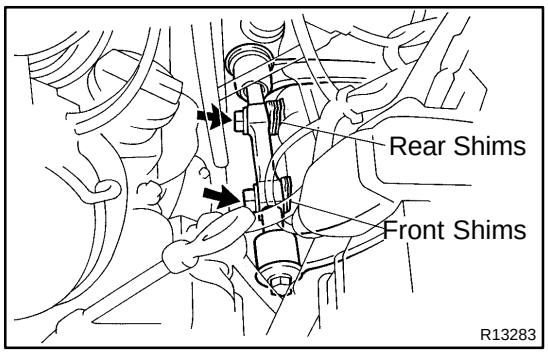

4. ADJUST CAMBER AND CASTER

(a) Loosen the upper suspension arm set bolts.

(b) Adjust the camber and caster by adding or removing shims (See adjustment chart).

Shim thickness:

4.0 mm (0.157 in.)	1.6 mm (0.063 in.)	1.2 mm (0.047 in.)

HINT:

Try to adjust the camber and caster to the center of the specified values.

Example

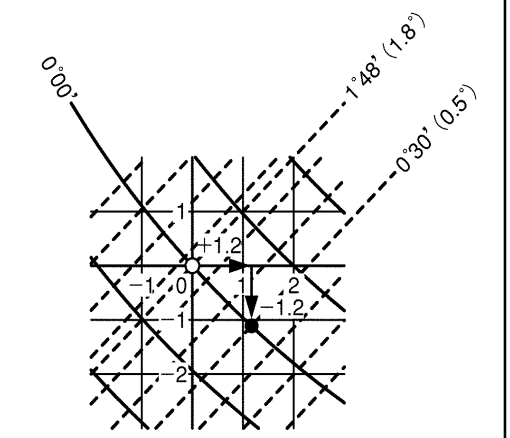

P F14683

(c) How to read adjustment chart.

(1) Find the wheel alignment standard value applicable for the particular model (See page SS–63).

(2) Mark the selected standard value on the adjustment chart.

Example:
Camber: 0°00
Caster: 0°30' (0.5°)

(3) Mark the alignment value measured when the vehicle was non–loaded on the adjustment chart.

Example:
Camber: 0°00'
Caster: 1°48' (1.8°)

(4) As shown in the chart, read the distance from the measured value to the standard value, and adjust the front and/or rear shim thickness accordingly.

Example:
Front shim thickness: –1.2 mm (–0.047 in.)
Rear shim thickness: +1.2 mm (0.047 in.)

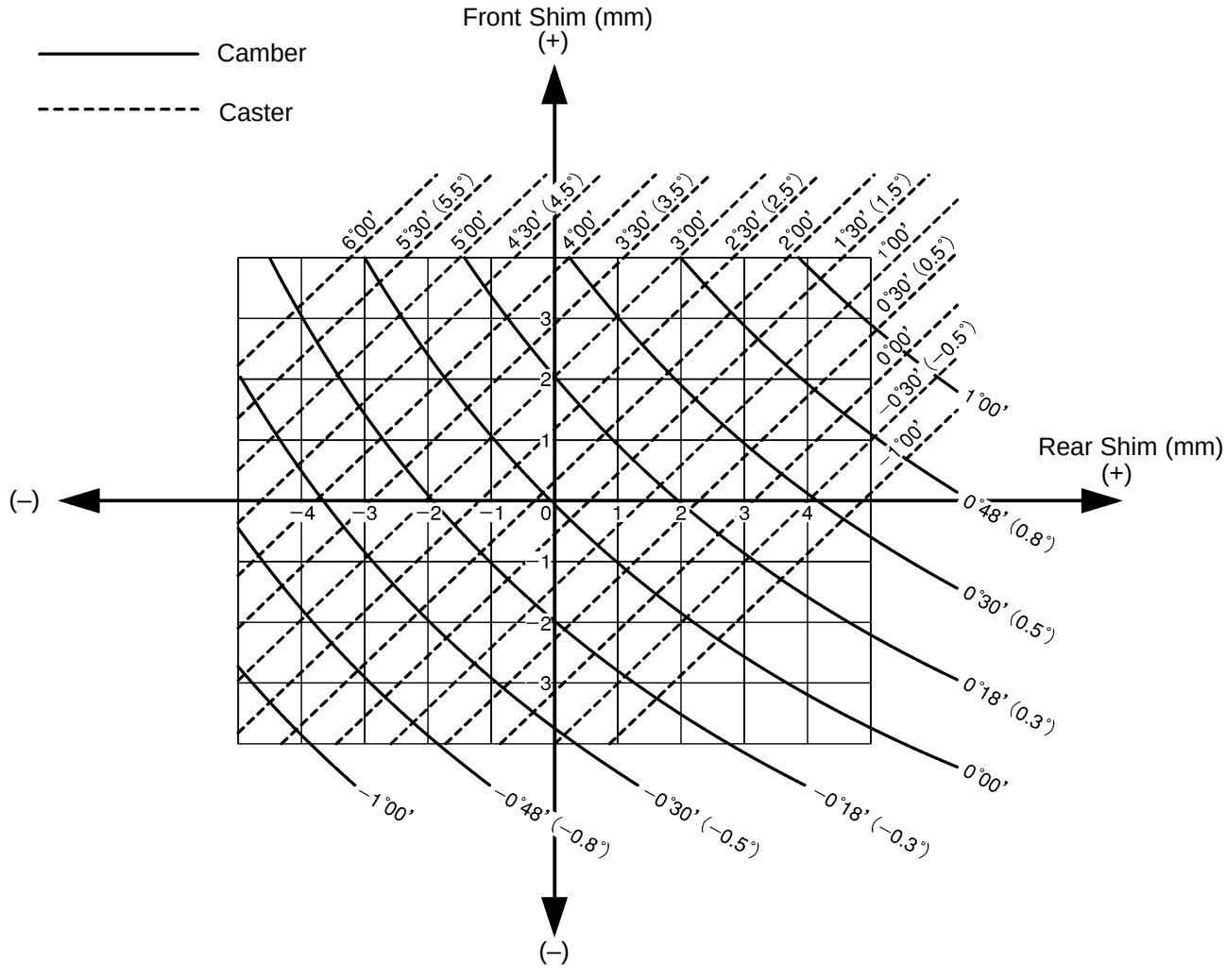

P F14684

(d) Torque the upper suspension arm set bolts.
Torque: 130 N·m (1,300 kgf·cm, 94 ft·lbf)

HINT:
If the steering axis inclination is not as specified value after the camber and caster have been correctly adjusted, recheck the steering knuckle and front wheel for distortion or looseness.

NOTICE:
Adjust the shim thickness to 7 mm (4 – 11 mm), and adjust the difference between the front and rear of the upper suspension arm shaft to within 4 mm.

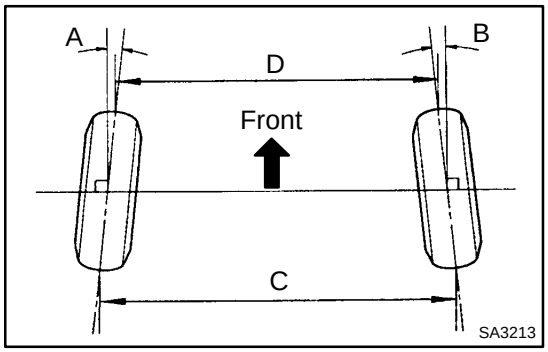

5. INSPECT TOE–IN (See page SS–63)

If the toe–in is not within the specified value, adjust the rack ends.

6. ADJUST TOE–IN

(a) Remove the 2 clips.

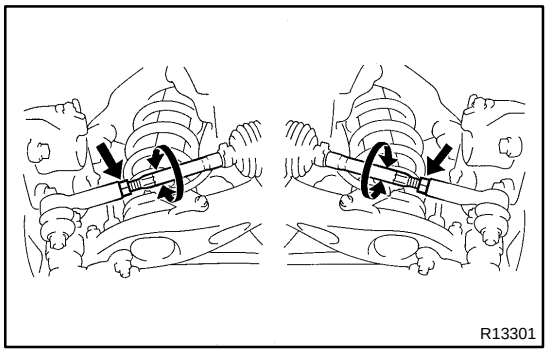

(b) Loosen the tie rod end lock nuts.
(c) Turn the right and left rack ends by an equal amount to adjust the toe–in.

HINT:
Try to adjust the toe–in to the center of the specified value.

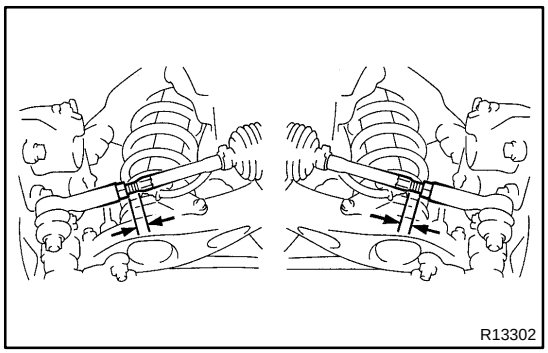

(d) Make sure that the lengths of the right and left rack ends are the same.
Rack end length difference: 1.5 mm (0.059 in.) or less
(e) Tighten the tie rod end lock nuts.
Torque: 54 N·m (550 kgf·cm, 40 ft·lbf)
(f) Place the boots on the seats and install the clips.

HINT:
Make sure that the boots are not twisted.

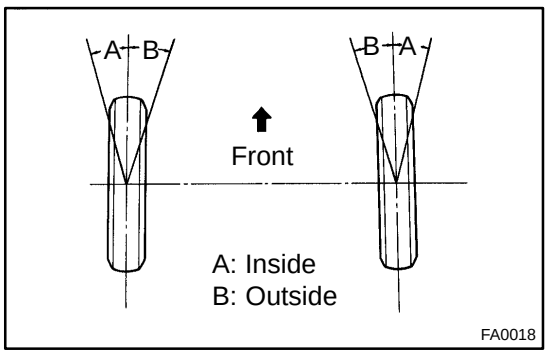

7. INSPECT WHEEL ANGLE

Turn the steering wheel fully and measure the turning angle.

Wheel turning angle:

Item	Inside wheel	Outside wheel: Reference
Max.	36° (33° – 36°)	31° (28° – 31°)

If the right and left inside wheel angles differ from the specified value, check the right and left rack end lengths.

HINT:
If the rack ends lengths are not equal, the wheel turning angle cannot be adjusted properly.
Reinspect the toe–in after adjusting the rack ends lengths.

FRONT WHEEL ALIGNMENT (4WD and PRE RUNNER)

SA1FZ–04

INSPECTION

HINT:
Pre runner is the model described below.
RZN191L–TRPDKAB, RZN196L–CRPDKAB,
RZN196L–PRPDKAB, VZN195L–CRPDKAB,
VZN195L–PRPDKAB

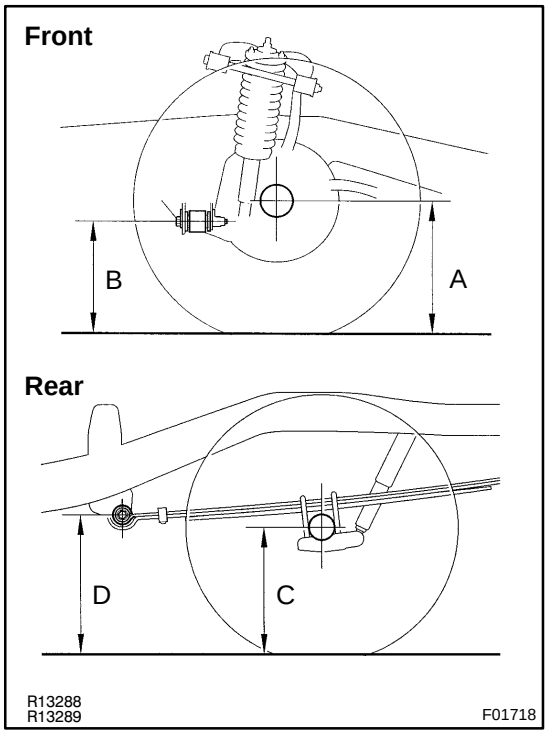

1. MEASURE VEHICLE HEIGHT (See page SS–63)

Measuring points:
A: Ground clearance of spindle center
B: Ground clearance of front adjusting cam bolt center
C: Ground clearance of rear axle shaft center
D: Ground clearance of leaf spring front hanger pin bolt center

NOTICE:

Before inspecting the wheel alignment, adjust the vehicle height to the specified value.

If the vehicle height is not the specified value, try to adjust it by pushing down on or lifting the body.

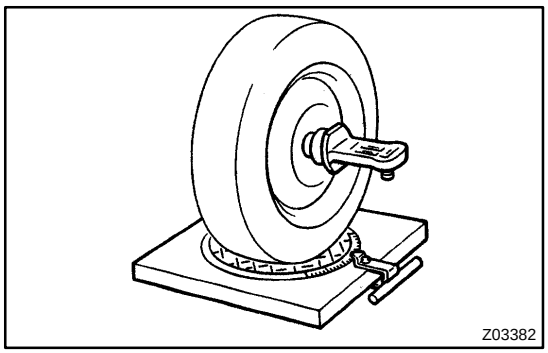

2. INSTALL CAMBER–CASTER–KINGPIN GAUGE OR POSITION VEHICLE ON WHEEL ALIGNMENT TESTER

Follow the specific instructions of the equipment manufacturer.

3. INSPECT CAMBER, CASTER AND STEERING AXIS INCLINATION (See page SS–63)

If the steering axis inclination is not within the specified value, after the camber and caster have been correctly adjusted, recheck the steering knuckle and front wheel for bearing or looseness.

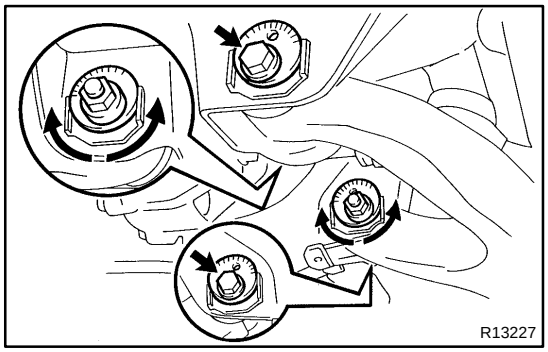

4. ADJUST CAMBER AND CASTER

(a) Loosen the front and/or rear adjusting cam nuts.
(b) Adjust the camber and caster by front and/or rear adjusting cams (See adjustment chart).

HINT:
Try to adjust the camber and caster to the center of the specified values.

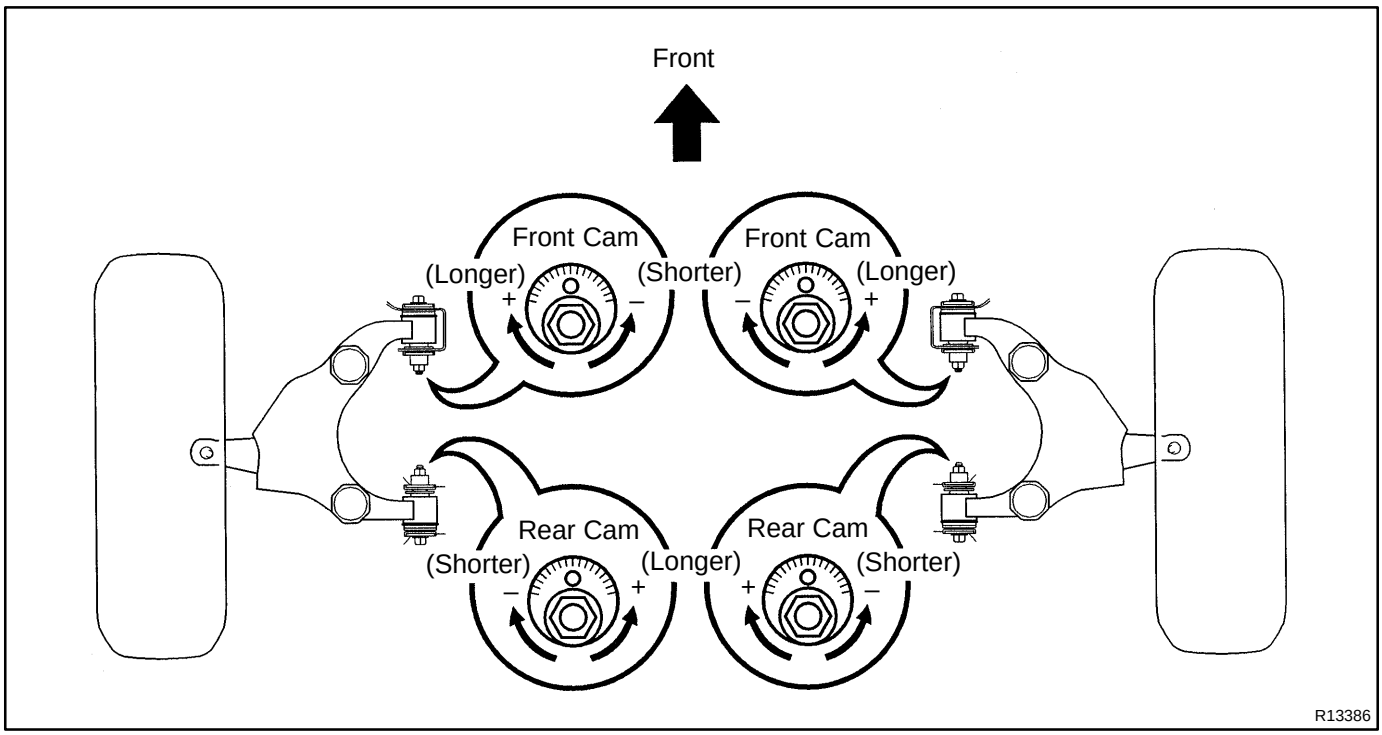

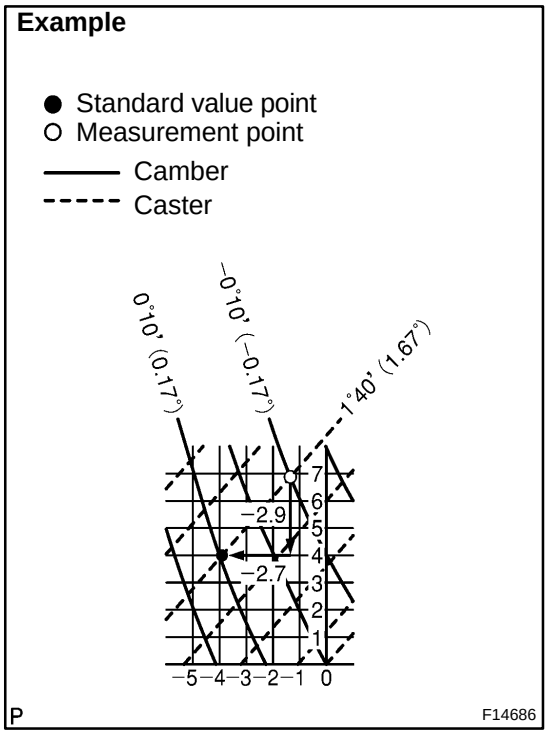

(c) How to read adjustment chart.

(1) Find the wheel alignment standard value applicable for the particular model.

(2) Mark the selected standard value on the adjustment chart.

Example:
Camber: 0˚10' (0.17˚)
Caster: 1˚40' (1.67˚)

(3) Mark the alignment value measured when the vehicle was non–loaded on the adjustment chart.

Example:
Camber: –0˚10' (–0.17˚)
Caster: 1˚40' (1.67˚)

(4) As shown in the chart, read the distance from the measured value to the standard value, and adjust the front and/or rear adjusting cams accordingly.

Example:
Front cam: –(Shorter) 2.9
Rear cam: –(Shorter) 2.7

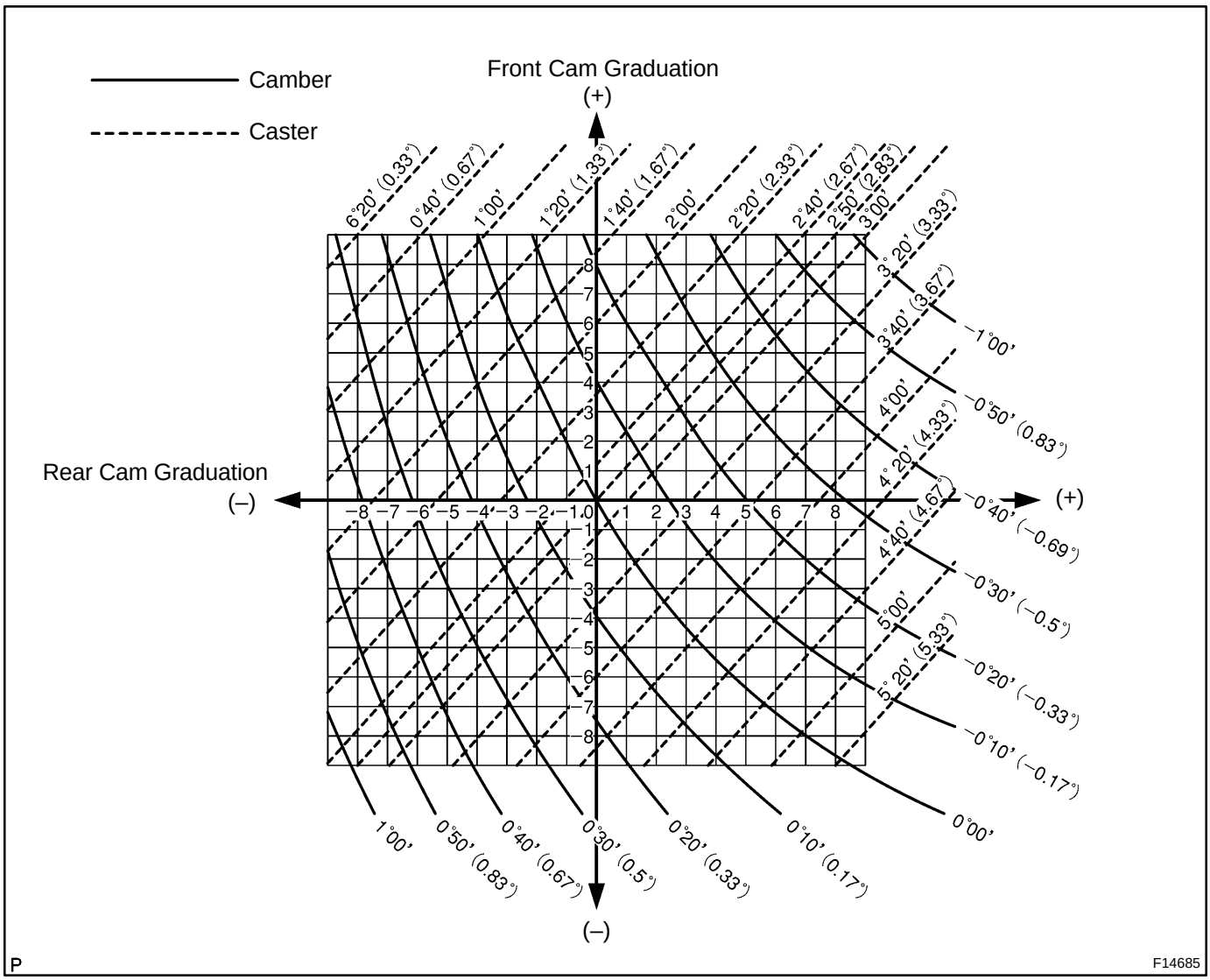

(d) Torque the front and/or rear adjusting cam nuts.
Torque: 130 N·m (1,325 kgf·cm, 96 ft·lbf)

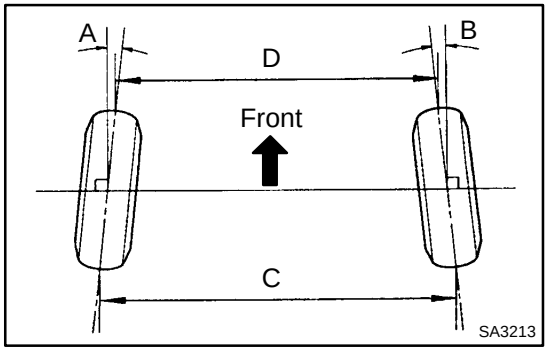

5. INSPECT TOE–IN (See page SS–63)
If the toe–in is not within the specified value, adjust the rack ends.

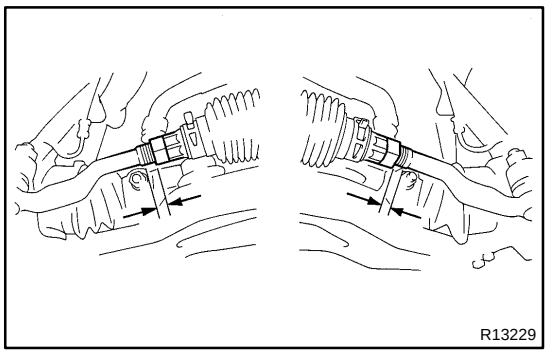

6. ADJUST TOE–IN AND WHEEL ANGLE

HINT:

First, check or adjust the lengths of the rack ends, then adjust the toe–in.

Rack end length difference: 1.5 mm (0.059 in.) or less

(a) Remove the 2 clips.

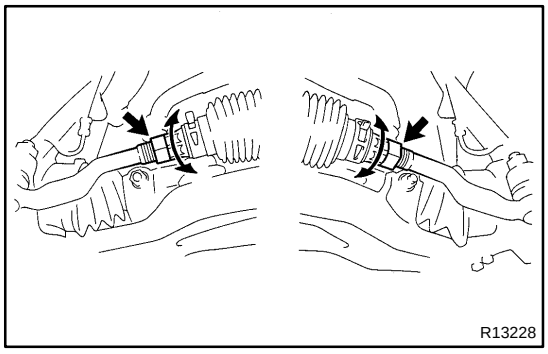

(b) Loosen the tie rod end lock nuts.

(c) Turn the right and left rack ends by an equal amount to adjust the toe–in.

HINT:

Try to adjust the toe–in to the center of the specified value.

(d) Make sure that the lengths of the right and left rack ends are the same.

Rack end length difference: 1.5 mm (0.059 in.) or less

(e) Tighten the tie rod end lock nuts.

Torque: 55 N·m (560 kgf·cm, 41 ft·lbf)

(f) Place the boots on the seats and install the clips.

HINT:

Make sure that the boots are not twisted.

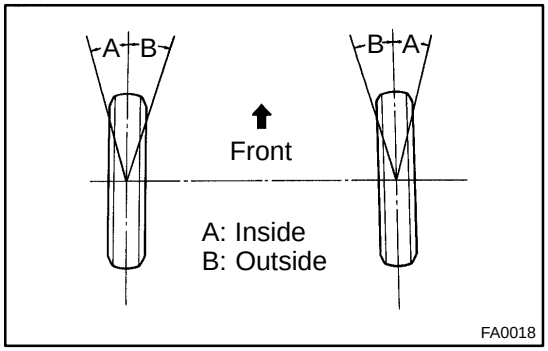

(g) Inspect the wheel angle.

Turn the steering wheel fully and measure the turning angle.

Wheel turning angle:

Item	Inside wheel	Outside wheel: Reference
Max.	37˚05' (35˚05' – 38˚05') (37.08˚ (35.08˚ – 38.08˚))	32˚20' (32.33˚)

If the right and left wheel turning angles differ from the specified value, readjust the toe–in and wheel angle within the specified value. At this time, the right and left error lengths of the rack end may be less than 1.5 mm (0.059 in.).

FRONT WHEEL HUB BOLT (2WD)

SA09E–02

REPLACEMENT

1. **REMOVE FRONT WHEEL**
2. **REMOVE AXLE HUB WITH STEERING KNUCKLE (See page SA–15)**

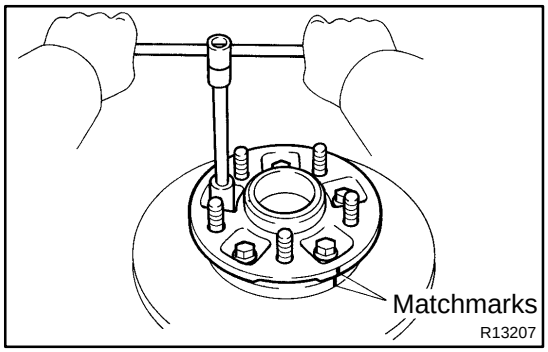

3. **REMOVE HUB BOLT**

(a) Place matchmarks on the disc and axle hub.

(b) Remove the 5 bolts and separate the disc and axle hub.

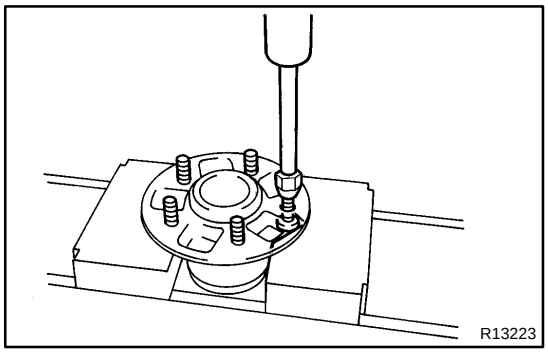

(c) Install the nut to the hub bolt.

(d) Using a brass bar and press, remove the hub bolt.

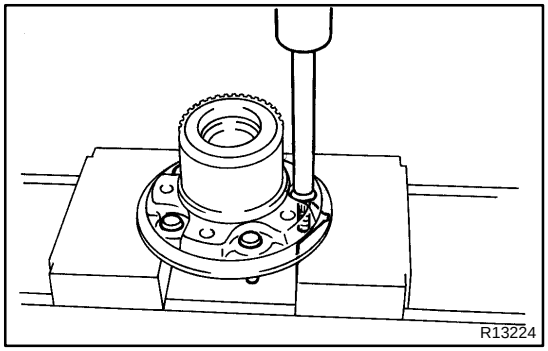

4. **INSTALL HUB BOLT**

(a) Using a brass bar and press, install a new hub bolt.

(b) Align the matchmarks and install the axle hub to the disc with the 5 bolts.

Torque: 64 N·m (650 kgf·cm, 47 ft·lbf)

5. **INSTALL AXLE HUB WITH STEERING KNUCKLE (See page SA–19)**
6. **INSTALL FRONT WHEEL**

Torque: 110 N·m (1,150 kgf·cm, 83 ft·lbf)

FRONT WHEEL HUB BOLT (4WD and PRE RUNNER)

SA1G7–02

REPLACEMENT

HINT:
Pre runner is the model described below.
RZN191L–TRPDKAB, RZN196L–CRPDKAB,
RZN196L–PRPDKAB, VZN195L–CRPDKAB,
VZN195L–PRPDKAB

1. REMOVE FRONT WHEEL

2. REMOVE BRAKE CALIPER AND DISC (See page SA–24)

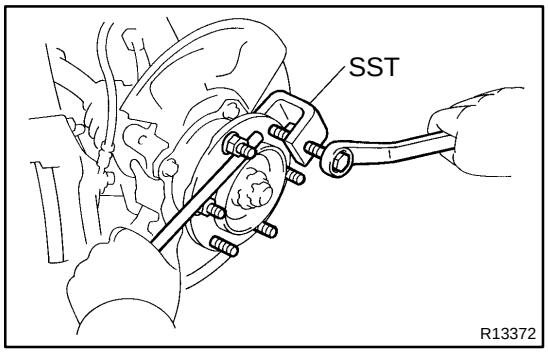

3. REMOVE HUB BOLT

Using SST, remove the hub bolt.

SST 09650–17011

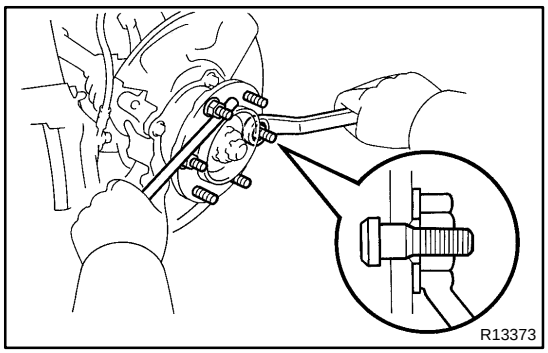

4. INSTALL HUB BOLT

(a) Install a washer and nut to a new hub bolt as shown in the illustration.

(b) Using a hammer handle or an equivalent to hold, install the bolt by torquing the nut.

5. INSTALL BRAKE DISC AND CALIPER (See page SA–30)

6. INSTALL FRONT WHEEL

Torque: 110 N·m (1,150 kgf·cm, 83 ft·lbf)

7. DEPRESS BRAKE PEDAL SEVERAL TIMES

REAR AXLE SHAFT

SA0B8–04

COMPONENTS

HINT:
Pre runner is the model described below.
RZN191L–TRPDKAB, RZN196L–CRPDKAB, PZN196L–PRPDKAB, VZN195L–CRPDKAB, VZN195L–PRPDKAB

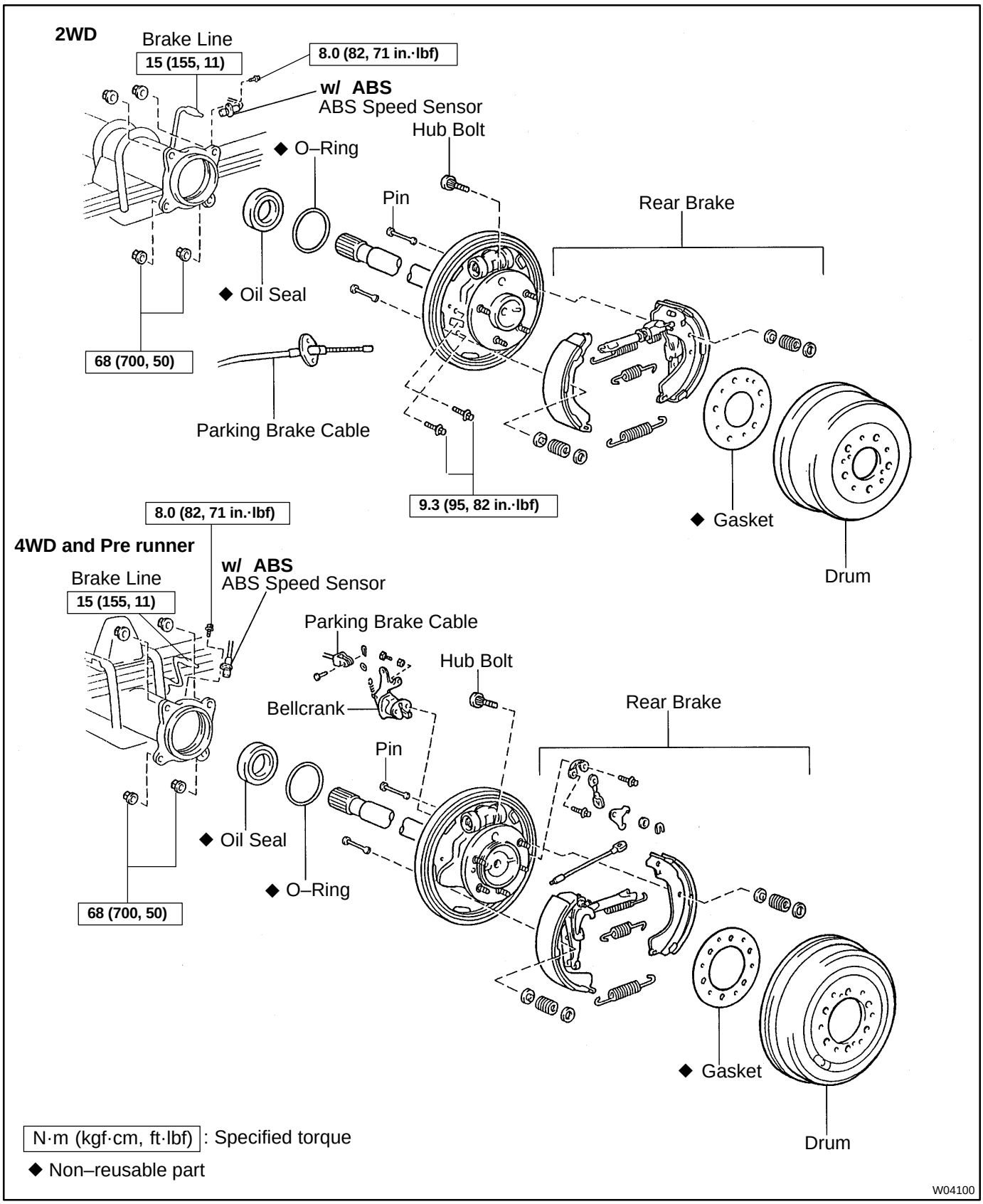
2WD
Brake Line
15 (155, 11)
8.0 (82, 71 in.·lbf)
w/ ABS
ABS Speed Sensor
Hub Bolt
◆ O–Ring
Pin
Rear Brake
◆ Oil Seal
68 (700, 50)
Parking Brake Cable
9.3 (95, 82 in.·lbf)
◆ Gasket
Drum
8.0 (82, 71 in.·lbf)
4WD and Pre runner
w/ ABS
ABS Speed Sensor
Brake Line
15 (155, 11)
Parking Brake Cable
Hub Bolt
Bellcrank
Rear Brake
Pin
◆ Oil Seal
◆ O–Ring
68 (700, 50)
◆ Gasket
Drum
N·m (kgf·cm, ft·lbf) : Specified torque
◆ Non–reusable part
W04100

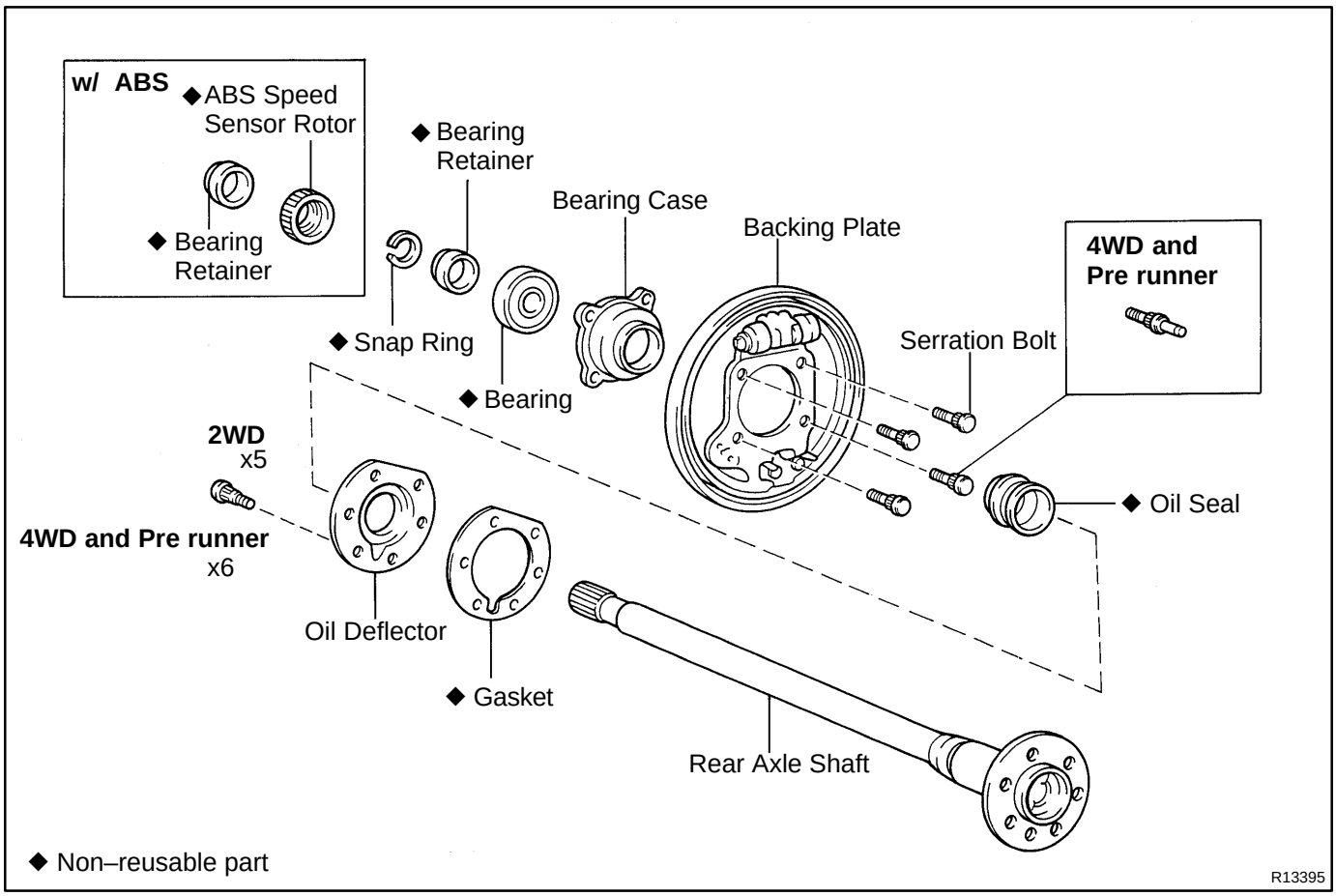
w/ ABS
◆ABS Speed Sensor Rotor
◆ Bearing Retainer
◆ Bearing Retainer
◆ Snap Ring
◆ Bearing
Bearing Case
Backing Plate
4WD and Pre runner
Serration Bolt
◆ Oil Seal
2WD
x5
4WD and Pre runner
x6
Oil Deflector
◆ Gasket
Rear Axle Shaft
◆ Non–reusable part
R13395

SA1GB–04

INSPECTION

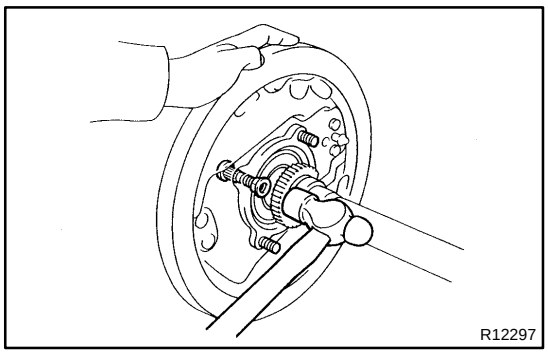

1. w/ ABS:

REMOVE BEARING RETAINER (DIFFERENTIAL SIDE) AND ABS SPEED SENSOR ROTOR

(a) Attach 4 nuts to the serration bolts and remove the serration bolts from the backing plate using a hammer.

NOTICE:

Do not reuse the nuts previously removed from the vehicle.

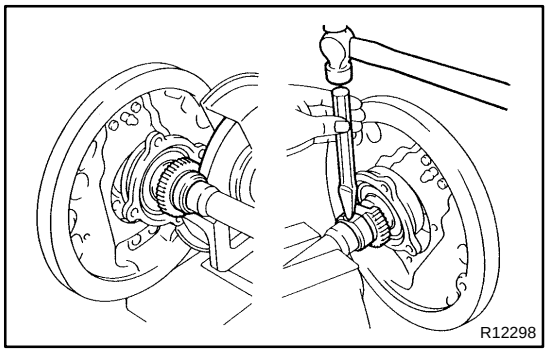

(b) Grind the retainer and sensor rotor surfaces using a grinder, then pry them out with a chisel and hammer.

(c) Attach washers and nuts to the serration bolts, then torque the nuts to install the serration bolts to the backing plate.

(d) Remove the 4 nuts and washers from the serration bolts.

2. REMOVE SNAP RING FROM AXLE SHAFT

Using a snap ring expander, remove the snap ring.

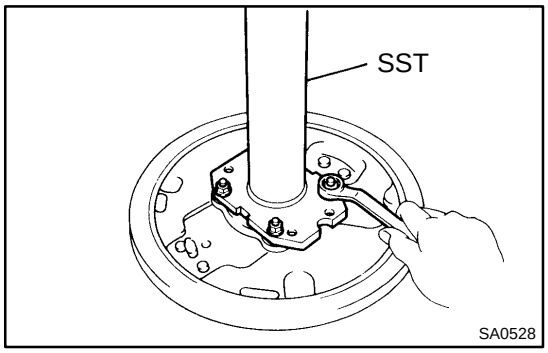

3. REMOVE REAR AXLE SHAFT FROM BACKING PLATE

(a) Position SST on the backing plate with the 4 nuts.
SST 09521–25011

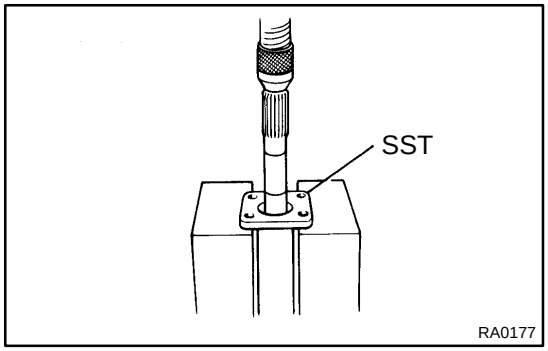

(b) Using a press, remove the rear axle shaft and bearing retainer from the backing plate.

(c) Remove the SST.

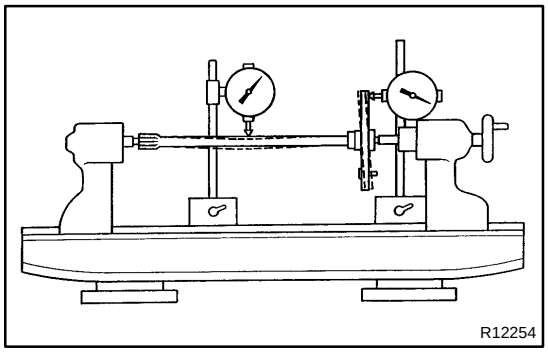

4. INSPECT AXLE SHAFT

Using a dial indicator, measure the runout of the shaft and flange.

Maximum shaft runout: 2.0 mm (0.079 in.)

Maximum flange runout: 0.1 mm (0.004 in.)

If the rear axle shaft or flange are damaged or worn, or if runout is greater than the maximum, replace the rear axle shaft.

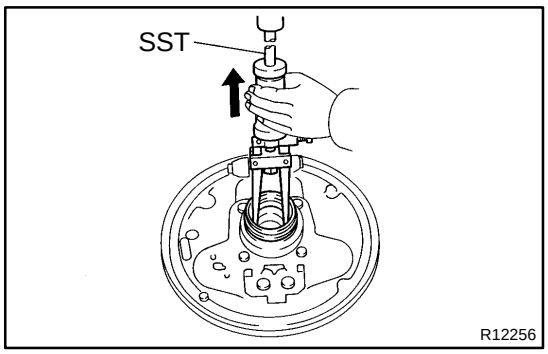

5. REMOVE OUTER OIL SEAL

Using SST, remove the oil seal.

SST 09308–00010

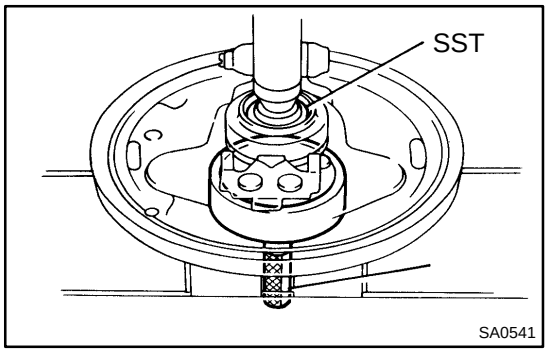

6. REPLACE REAR AXLE BEARING

(a) Using SST and a press, remove the bearing.

SST 09223–56010, 09950–60010 (09951–00560)

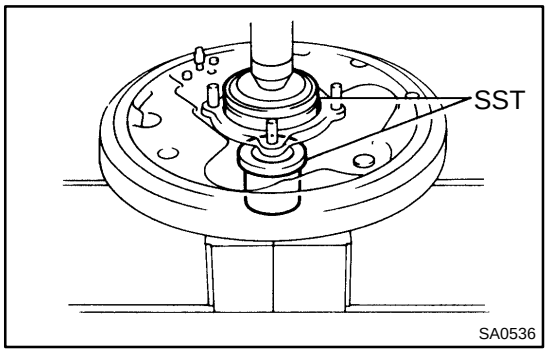

(b) Using SST and a press, install a new bearing.

SST 09515–30010, 09950–60020 (09951–00890)

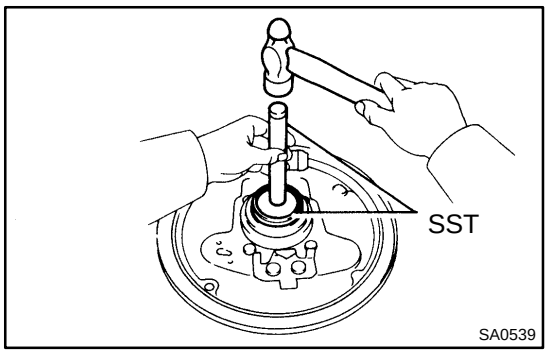

7. INSTALL NEW OUTER OIL SEAL

Using SST and a hammer, install a new oil seal.

SST 09950–60010 (09951–00610),
09950–70010 (09951–07150)

8. REPLACE BEARING CASE

(a) Remove the oil seal (outer side) and bearing.

(b) Install 4 nuts to the serration bolts.

(c) Using a hammer, remove the serration bolts and bearing case.

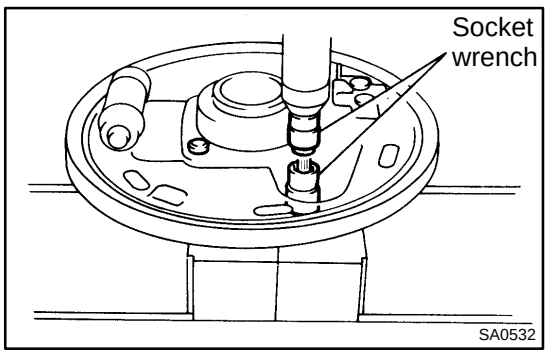

(d) Position the backing plate on a new bearing case and using 2 socket wrenches, install the serration bolts.

(e) Install a new bearing and oil seal (outer side).

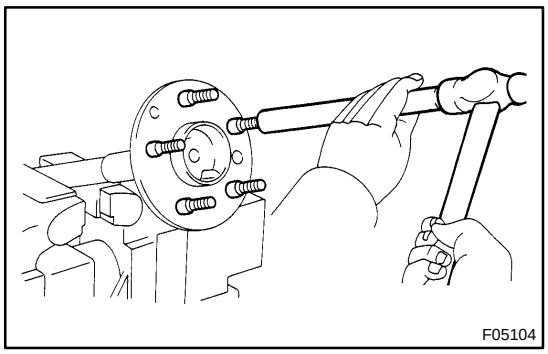

9. REPLACE OIL DEFLECTOR

(a) Using a brass bar and hammer, remove the hub bolts, oil deflector and gasket.

(b) Position a new gasket on the axle shaft and install a washer and nut to a new hub bolt, as shown in the illustration, and install the hub bolt by torquing the nut.

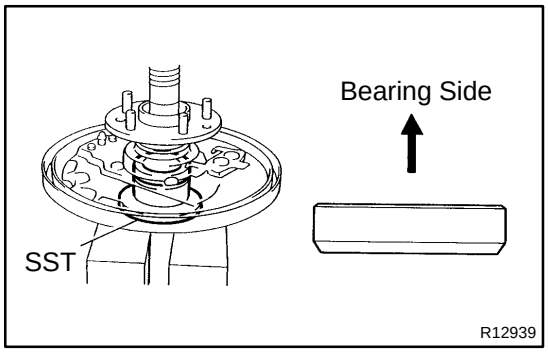

10. INSTALL REAR AXLE SHAFT IN BACKING PLATE

(a) Coat a new oil seal lip with MP grease.

(b) Install the backing plate and bearing retainer on the rear axle shaft.

(c) Using SST and a press, install the rear axle shaft into the backing plate.

SST 09316–60011 (09316–00051)

(d) Using snap ring expander, install a new snap ring.

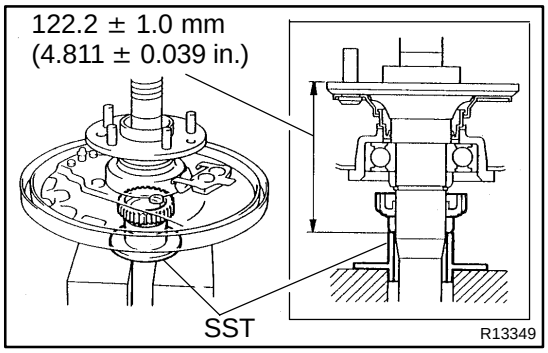

11. w/ ABS:
INSTALL ABS SPEED SENSOR ROTOR AND BEARING RETAINER (DIFFERENTIAL SIDE)

Using SST and a press, install a new sensor rotor and new bearing retainer to the axle shaft.

SST 09316–60011 (09316–00051)

Standard length: 122.2 ± 1.0 mm (4.811 ± 0.039 in.)

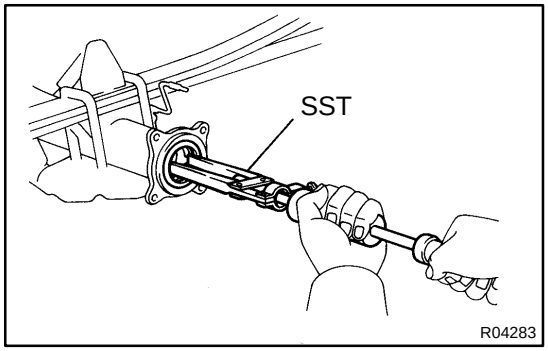

12. REPLACE OIL SEAL (INNER SIDE)

(a) Using SST, remove the oil seal.

SST 09308–00010

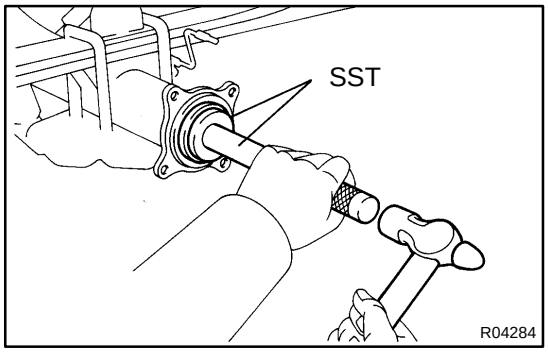

(b) Using SST and a hammer, install a new oil seal.

SST 09950–60020 (09951–00710),
09950–70010 (09951–07150)

(c) Coat a new oil seal lip with MP grease.

SA0BB–04

INSTALLATION

Installation is in the reverse order of removal (See page SA–129).

HINT:

After installation, bleed the brake system (See page BR–4) and check the ABS speed sensor signal (See page DI–534).

SA0B9–03

REMOVAL

1. REMOVE REAR WHEEL AND BRAKE DRUM

Torque: 110 N·m (1,150 kgf·cm, 83 ft·lbf)

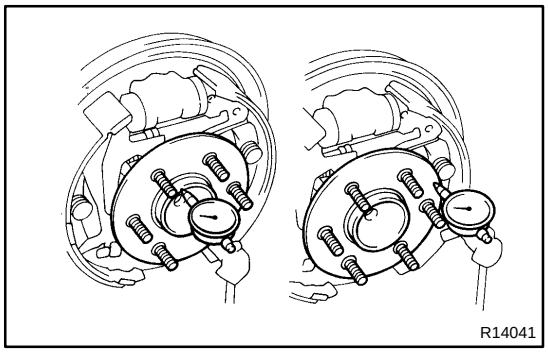

2. CHECK BEARING BACKLASH AND AXLE SHAFT DEVIATION

(a) Using a dial indicator, check the backlash in the bearing shaft direction.

Maximum: 0.7 mm (0.028 in.)

If the backlash exceeds the maximum, replace the bearing.

(b) Using a dial indicator, check the deviation at the surface of the axle shaft outside the hub bolt.

Maximum: 0.1 mm (0.0039 in.)

If the deviation exceeds the maximum, replace the axle shaft.

3. w/ ABS:

REMOVE ABS SPEED SENSOR FROM REAR AXLE HOUSING

Remove the bolt and ABS speed sensor.

Torque: 8.0 N·m (82 kgf·cm, 71 in.·lbf)

4. REMOVE REAR BRAKE ASSEMBLY

2WD: See page BR–37

4WD and pre runner: See page BR–42

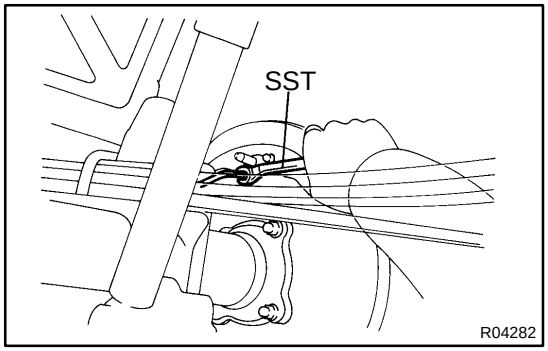

5. DISCONNECT BRAKE LINE AND PARKING BRAKE CABLE

(a) Using SST, disconnect the brake line from the wheel cylinder.

SST 09751–36011

Torque: 15 N·m (155 kgf·cm, 11 ft·lbf)

(b) 2WD:

Remove the 2 bolts and disconnect the parking brake cable.

Torque: 9.3 N·m (95 kgf·cm, 82 in.·lbf)

6. REMOVE REAR AXLE SHAFT ASSEMBLY

(a) Remove the 4 backing plate mounting nuts.

Torque: 68 N·m (700 kgf·cm, 50 ft·lbf)

(b) Pull out the rear axle shaft assembly from the rear axle housing.

NOTICE:

Be careful not to damage the oil seal.

7. REMOVE O–RING FROM REAR AXLE HOUSING

REAR DIFFERENTIAL CARRIER (2RZ–FE)

SA0BH–03

COMPONENTS

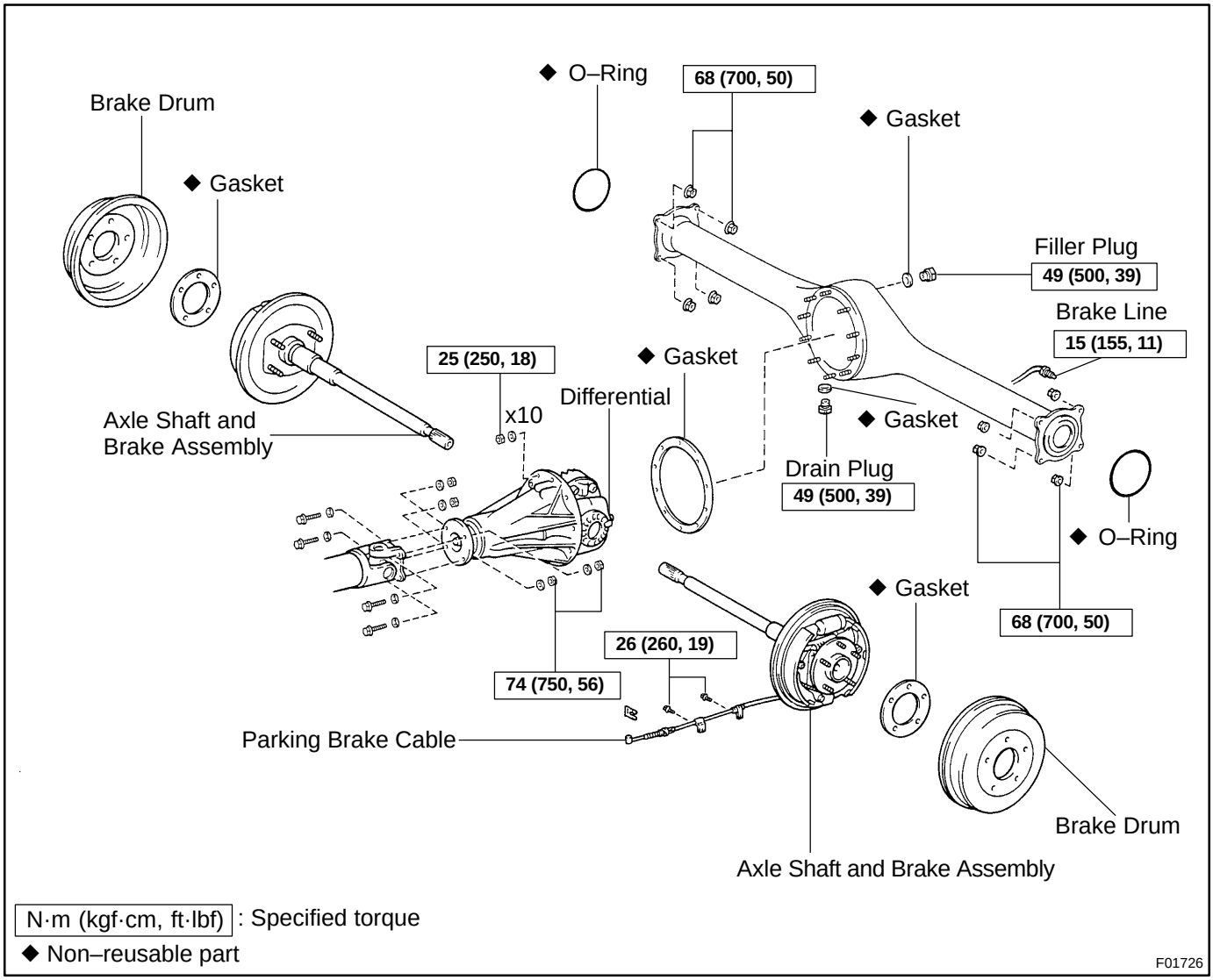

N·m (kgf·cm, ft·lbf) : Specified torque

◆ Non–reusable part

F01726

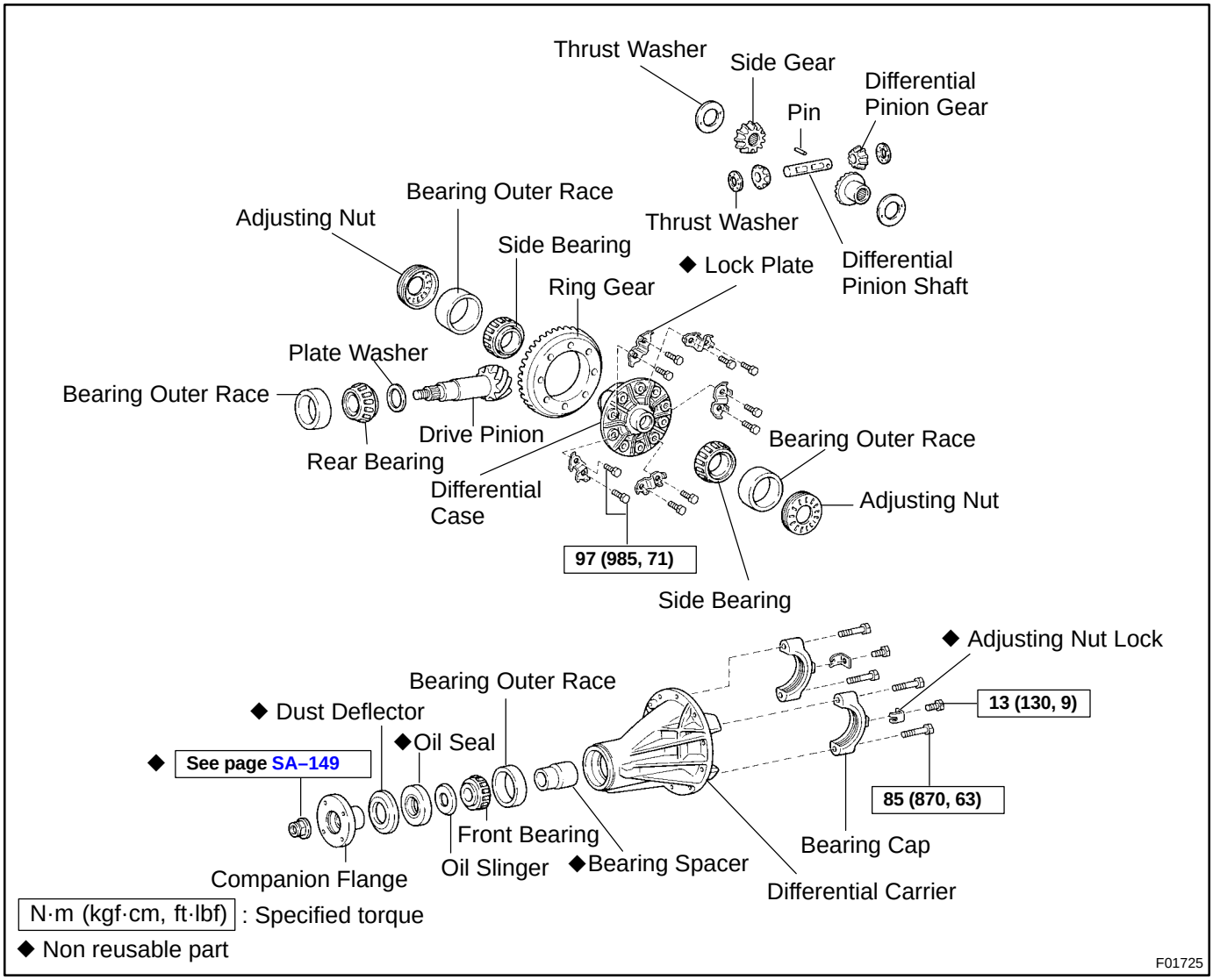
Thrust Washer
Side Gear
Differential Pinion Gear
Pin
Thrust Washer
Differential Pinion Shaft
Bearing Outer Race
Adjusting Nut
Side Bearing
Ring Gear
◆ Lock Plate
Plate Washer
Bearing Outer Race
Drive Pinion
Rear Bearing
Differential Case
Bearing Outer Race
Adjusting Nut
97 (985, 71)
Side Bearing
◆ Adjusting Nut Lock
13 (130, 9)
Bearing Outer Race
◆ Dust Deflector
◆Oil Seal
◆ See page SA–149
85 (870, 63)
Front Bearing
Oil Slinger
◆Bearing Spacer
Bearing Cap
Companion Flange
Differential Carrier
N·m (kgf·cm, ft·lbf) : Specified torque
◆ Non reusable part
F01725

SA1GC–04

DISASSEMBLY

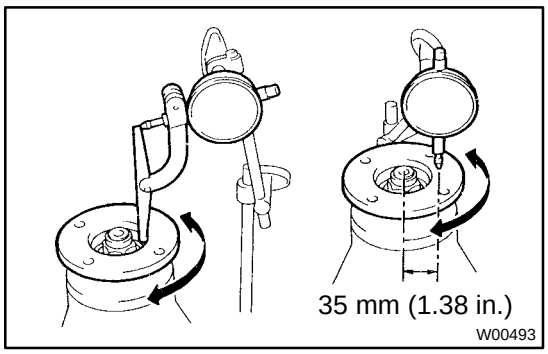

1. CHECK COMPANION FLANGE RUNOUT

Using a dial indicator, measure the vertical and lateral runout of the companion flange.

Maximum: runout: 0.10 mm (0.0039 in.)

If the runout exceeds the maximum, replace the companion flange.

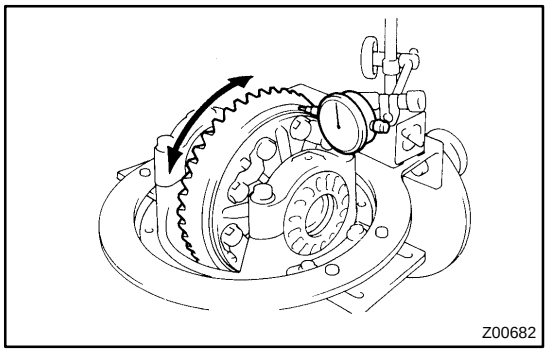

2. CHECK RING GEAR RUNOUT

Using a dial indicator, measure the ring gear runout.

Maximum runout: 0.07 mm (0.0028 in.)

If the runout exceeds the maximum, replace the ring gear.

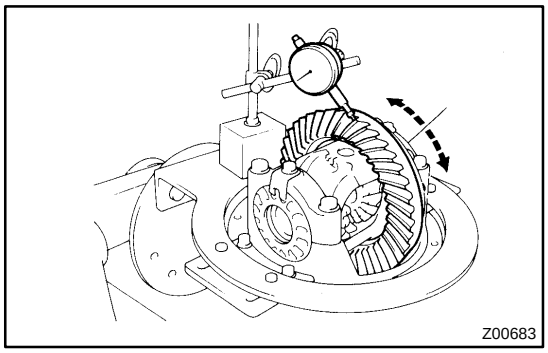

3. CHECK RING GEAR BACKLASH

Using a dial indicator, while holding the companion flange, measure the ring gear backlash.

Backlash: 0.13 – 0.18 mm (0.0051 – 0.0071 in.)

HINT:

Measure at 3 or more positions around the circumference of the ring gear.

If the backlash is not within the specified value, adjust the side bearing preload or repair as necessary.

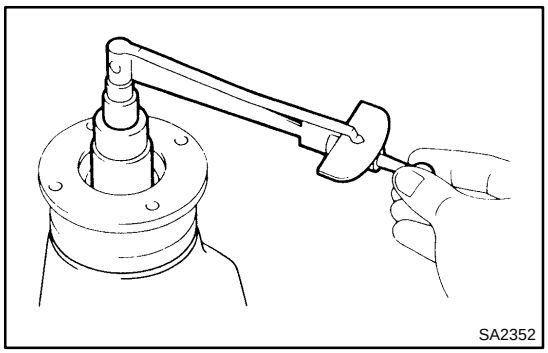

4. MEASURE DRIVE PINION PRELOAD

Using a torque wrench, measure the preload of the drive pinion using the backlash between the drive pinion and ring gear.

Preload (at starting):

0.6 – 1.0 N·m (6 – 10 kgf·cm, 5.2 – 8.7 in.·lbf)

5. CHECK TOTAL PRELOAD

Using a torque wrench, measure the total preload with the teeth of the drive pinion and ring gear in contact.

Total preload (at starting):

Drive pinion preload plus 0.4 – 0.6 N·m (4 – 6 kgf·cm, 3.5 – 5.2 in.·lbf)

If necessary, disassemble and inspect the differential.

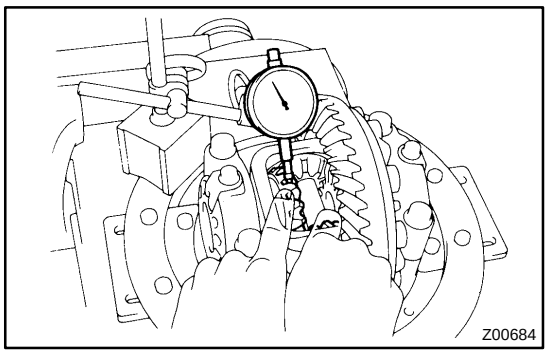
Z00684

6. CHECK SIDE GEAR BACKLASH

Using a dial indicator, measure the side gear backlash with holding one pinion gear toward the case.

Backlash: 0.05 – 0.20 mm (0.0020 – 0.0079 in.)

If the backlash is not within the specified value, replace the side gear thrust washer of the different thickness (See page SA–149).

7. CHECK TOOTH CONTACT BETWEEN RING GEAR AND DRIVE PINION (See page SA–149)

8. REMOVE COMPANION FLANGE

(a) Using a chisel and a hammer, unstake the nut.

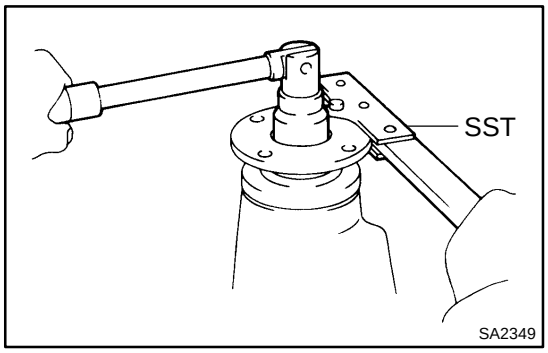

SA2349

(b) Using SST to hold the flange, remove the nut.
SST 09330–00021

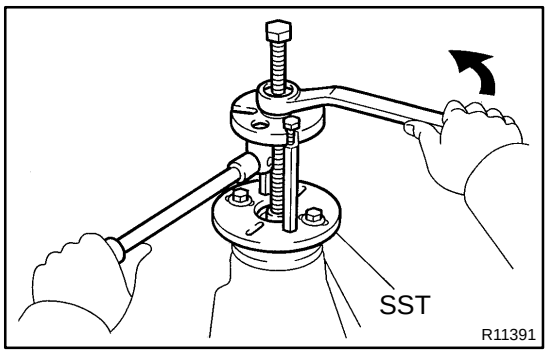

R11391

(c) Using SST, remove the companion flange.
SST 09950–30012 (09951–03010, 09953–03010, 09954–03010, 09955–03030, 09956–03020)

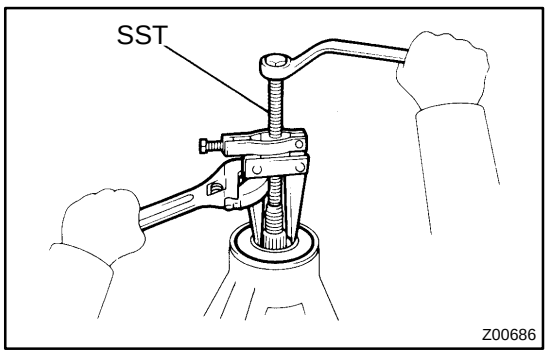

Z00686

9. REMOVE FRONT OIL SEAL AND OIL SLINGER

(a) Using SST, remove the oil seal from the differential carrier.
SST 09350–32014 (09308–10010)

(b) Remove the oil slinger.

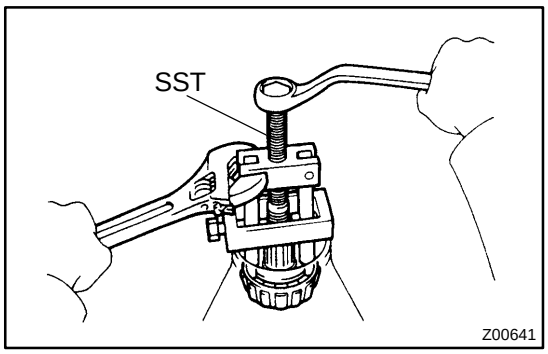

10. REMOVE FRONT BEARING AND BEARING SPACER

(a) Using SST, remove the bearing from the drive pinion.
SST 09556–22010

If the front bearing is damage or worn, replace the front bearing.

(b) Remove the bearing spacer.

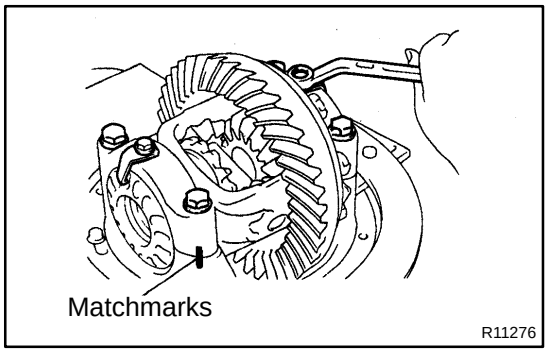

11. REMOVE DIFFERENTIAL CASE

(a) Place matchmarks on the bearing cap and differential carrier.
(b) Remove the 2 adjusting nut locks.
(c) Remove the 4 bolts and 2 bearing caps.
(d) Remove the 2 adjusting nuts.
(e) Remove the differential case with the side bearing outer races from the differential carrier.

HINT:
Tag the disassembled parts to show the location for reassembling.

12. REMOVE DRIVE PINION FROM DIFFERENTIAL CARRIER

Remove the drive pinion with the rear bearing.

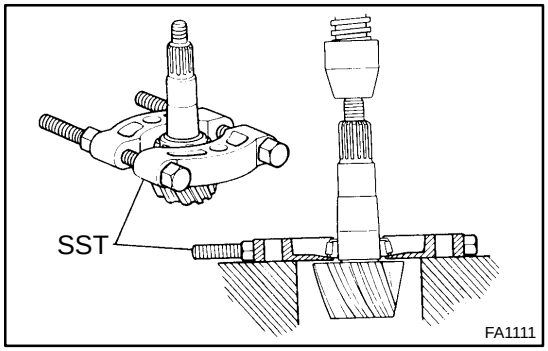

13. REMOVE DRIVE PINION REAR BEARING

(a) Using SST and a press, remove the bearing from the drive pinion.
SST 09950–00020

HINT:
If the drive pinion or ring gear is damaged, replace them as a set.

(b) Remove the plate washer from the drive pinion.

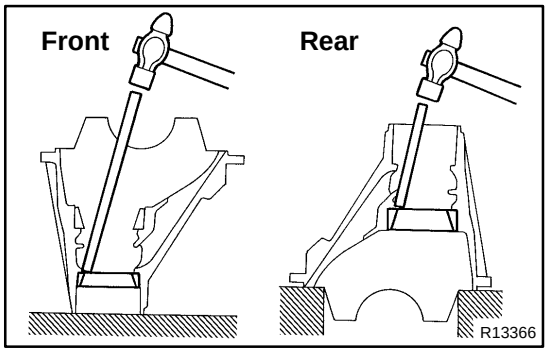

14. REMOVE FRONT AND REAR BEARING OUTER RACE

Using a brass bar and hammer, remove the outer races from the carrier.

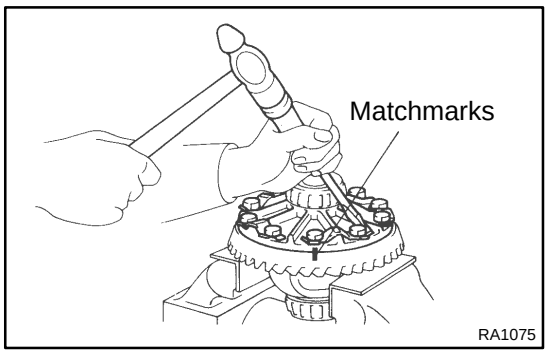

15. REMOVE RING GEAR

(a) Place matchmarks on the ring gear and differential case.
(b) Using a screwdriver and hammer, unstake the 5 lock plates.
(c) Remove the 10 bolts and 5 lock plates.
(d) Using a plastic hammer, tap on the ring gear to separate it from the differential case.

16. CHECK DIFFERENTIAL CASE RUNOUT

(a) Place the bearing outer races on their respective bearings. Check that the right and left outer races are not interchanged.
(b) Install the differential case in the differential carrier.
(c) When there is not play left in the side bearings, install the plate washers.
(d) Align the matchmarks on the bearing cap and differential carrier.
(e) Install and uniformly tighten the 4 bearing cap bolts in several passes.

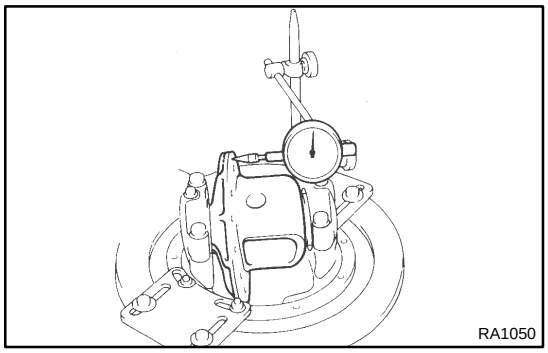

(f) Using a dial indicator, measure the differential case runout.
Maximum runout: 0.07 mm (0.0028 in.)
(g) Remove the differential case.

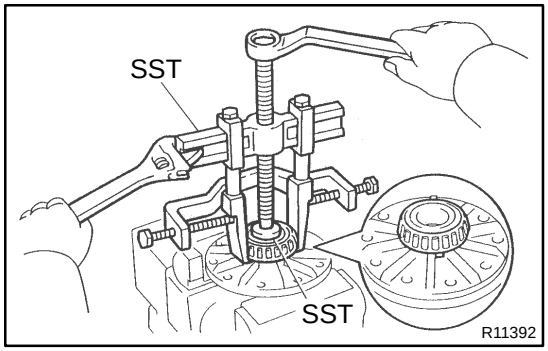

17. REMOVE SIDE BEARINGS

Using SST, remove the 2 side bearings from the differential case.

SST 09950–40011 (09951–04010, 09952–04010, 09953–04020, 09954–04010, 09955–04061, 09957–04010, 09958–04011), 09950–60010 (09951–00450)

HINT:
Fix the claws of SST to the notch in the differential case.

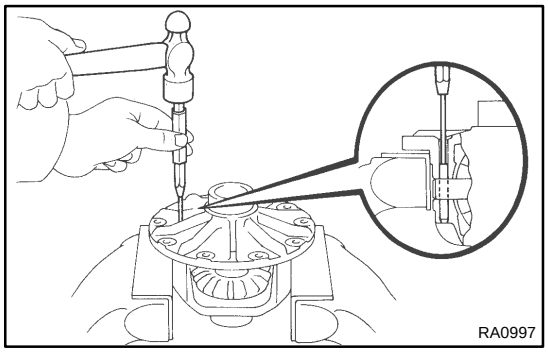

18. DISASSEMBLE DIFFERENTIAL CASE ASSEMBLY

(a) Using a pin punch and hammer, remove the straight pin.
(b) Remove the pinion shaft, 2 pinion gears, pinion gear thrust washers, side gears and side gear thrust washers from the differential case.

SA0BM–03

INSTALLATION

Installation is in the reverse order of removal (See page SA–143).

HINT:

After installation, fill the differential with hypoid gear oil (See page SA–137).

SA0BL–05

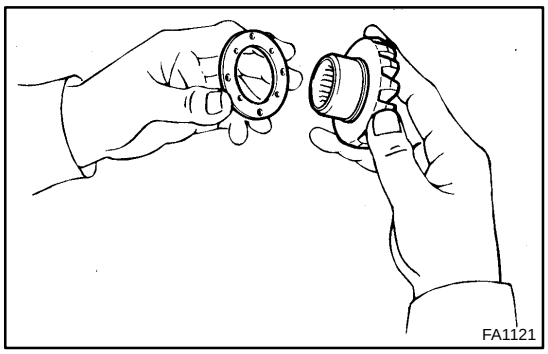
FA1121

REASSEMBLY

1. ASSEMBLE DIFFERENTIAL SIDE

(a) Install the 2 thrust washers on the side gears.

HINT:

Refer to the table below to select thrust washers which will ensure that the backlash is within the specification.

Washer thickness:

Thickness	Thickness
1.0 mm (0.039 in.)	1.2 mm (0.047 in.)
1.1 mm (0.043 in.)	1.3 mm (0.051 in.)

(b) Install the 2 side gears with the thrust washers, 2 pinion gears, 2 pinion gear thrust washers and pinion shaft in the differential case.

HINT:

Align the holes of the differential case and pinion shaft.

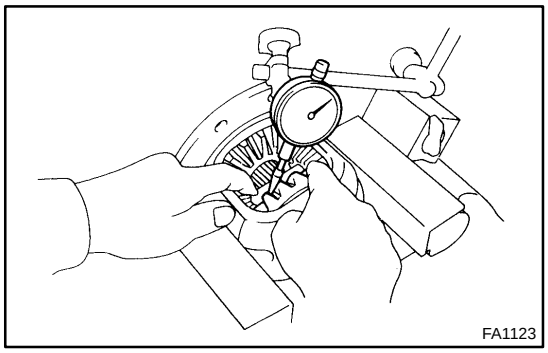
FA1123

(c) Using a dial indicator, measure the side gear backlash with holding one pinion gear toward the differential case.

Backlash: 0.05 – 0.20 mm (0.0020 – 0.0079 in.)

If the backlash is not within the specified value, select an appropriate thickness for the side gear thrust washer.

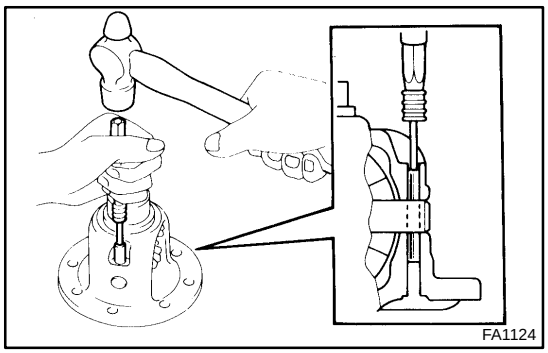
FA1124

(d) Using a pin punch and hammer, install the straight pin through the differential case and hole of the pinion shaft.

(e) Using a chisel and hammer, stake the outside of the differential case pin hole.

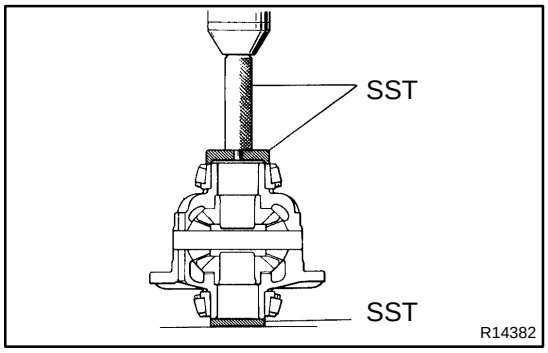

R14382

2. INSTALL SIDE BEARINGS

Using SST and a press, install the 2 side bearings into the differential case.

SST 09550–10013 (09252–10010, 09557–10011), 09950–60010 (09951–00450)

3. INSTALL RING GEAR ON DIFFERENTIAL CASE

(a) Clean the contact surfaces of the differential case and ring gear.

(b) Heat the ring gear to about 100˚C (212˚F) in boiling water.

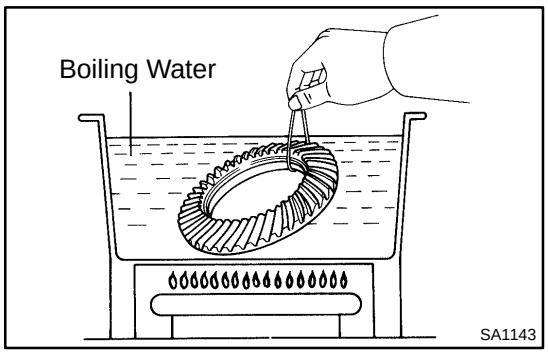

(c) Carefully take the ring gear out of the boiling water.

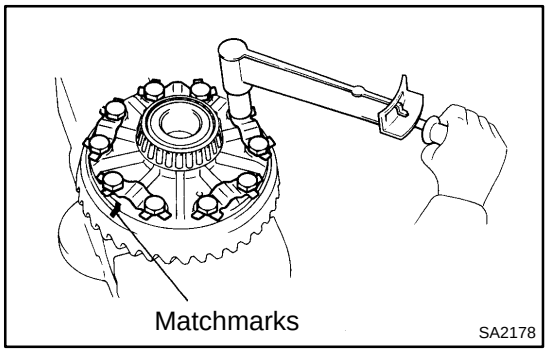

(d) After the moisture on the ring gear has completely evaporated, quickly install the ring gear to the differential case.

HINT:

Align the matchmarks on the ring gear and the differential case.

(e) Temporarily install 5 new lock plates and the 10 bolts so that the bolt holes in the ring gear and differential case are not misaligned.

(f) After the ring gear has cooled sufficiently, torque the ring gear set bolts.

Torque: 97 N·m (985 kgf·cm, 71 ft·lbf)

(g) Using a chisel and hammer, stake the lock plates.

HINT:

Stake the claws of the lock plates to fix the bolts. For the claw contacting the protruding portion of the bolt, stake only the half of it along the tightening direction.

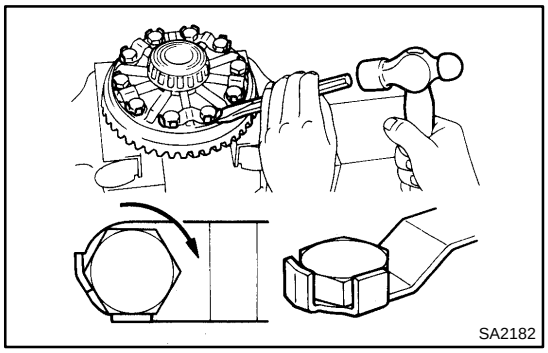

4. CHECK RING GEAR RUNOUT

(a) Install the differential case into the differential carrier and tighten the adjusting nut just to make sure the no play in the bearing (See step 8. to 9.).

(b) Install the bearing caps (See step 10.).

(c) Using a dial indicator, measure the runout of the ring gear.

Maximum runout: 0.07 mm (0.0028 in.)

(d) Remove the bearing caps and differential case.

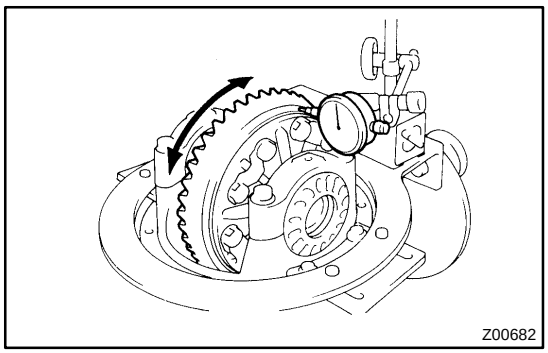

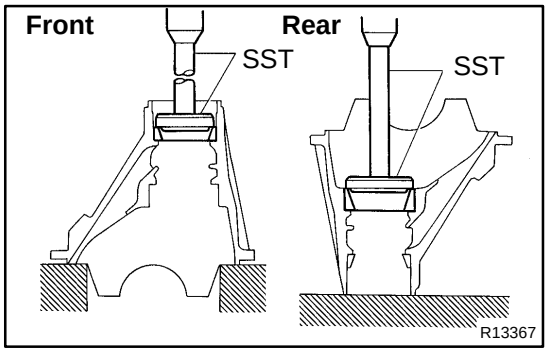

5. INSTALL DRIVE PINION FRONT AND REAR BEARING OUTER RACES

(a) Using SST and a press, install the front bearing outer race.

SST 09950–60020 (09951–00790),
09950–70010 (09951–07150)

(b) Using SST and a press, install the rear bearing outer race.

SST 09950–60020 (09951–00710),
09950–70010 (09951–07150)

6. INSTALL DRIVE PINION REAR BEARING

(a) Install the plate washer on the drive pinion.

HINT:

First fit a washer with the same thickness as the washer which was removed, then after checking the tooth contact pattern, replace the washer with one of a different thickness if necessary.

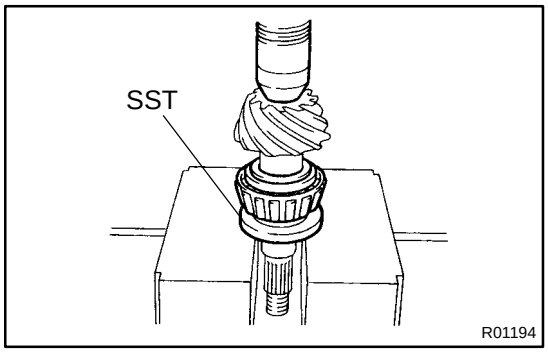

(b) Using SST and a press, install the rear bearing to the drive pinion.

SST 09506–30012

7. TEMPORARILY ADJUST DRIVE PINION PRELOAD

(a) Place the drive pinion and front bearing.

HINT:

Assemble the spacer and oil seal after adjusting the tooth contact pattern.

(b) Install the oil slinger.

(c) Using SST, install the companion flange.

SST 09950–30012 (09951–03010, 09953–03010, 09954–03010, 09955–03030, 09956–03020)

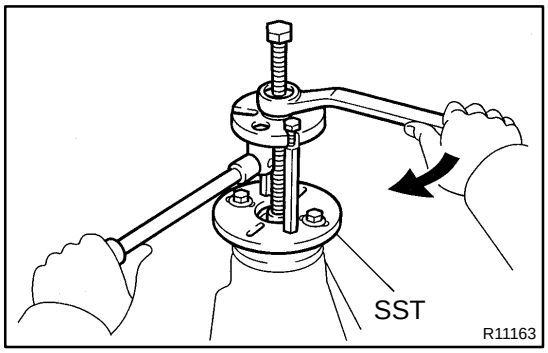

(d) Coat the threads of the nut with hypoid gear oil.

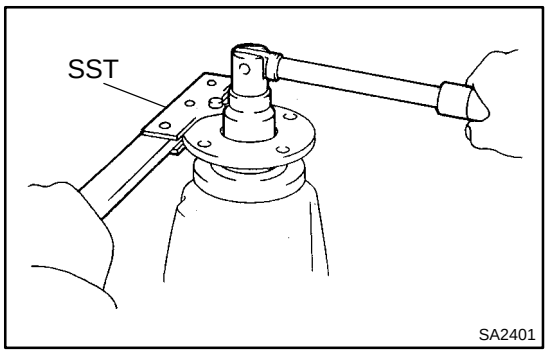

(e) Adjust the drive pinion preload by tightening the companion flange nut.

HINT:

Using SST to hold the flange, tighten the nut.

SST 09330–00021

NOTICE:

As there is no spacer, tighten the nut a little at a time, being careful not to overtighten it.

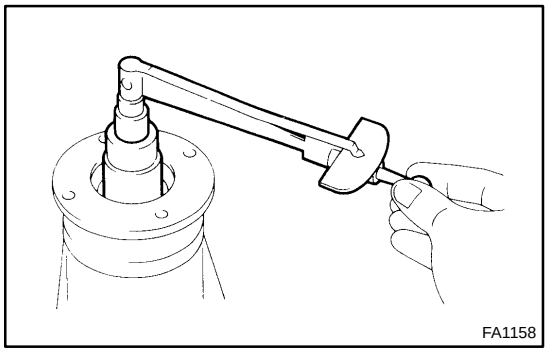

(f) Using a torque wrench, measure the preload of the drive pinion using the backlash between the drive pinion and ring gear.

Preload (at starting):

New bearing

1.4 – 2.1 N·m (14 – 21 kgf·cm, 12.2 – 18.3 in.·lbf)

Reused bearing

0.6 – 1.0 N·m (6 – 10 kgf·cm, 5.2 – 8.7 in.·lbf)

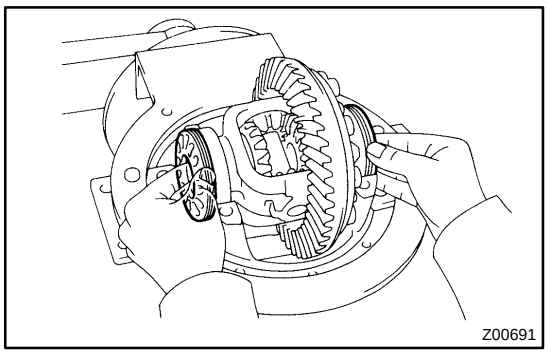
Z00691

8. INSTALL DIFFERENTIAL CASE IN CARRIER

(a) Place the 2 bearing outer races on their respective bearings. Make sure the right and left outer races are not interchanged.

(b) Install the case in the carrier.

HINT:

Make sure that there is a backlash between the ring gear and drive pinion.

9. INSTALL ADJUSTING NUTS

Install the 2 adjusting nuts on the carrier, making sure the nuts are threaded properly.

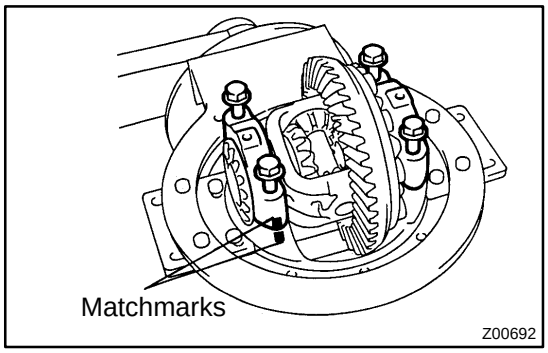

Z00692

10. INSTALL BEARING CAPS

Align the matchmarks on the cap and carrier. Screw in the 2 bearing cap bolts 2 or 3 turns and press down the bearing cap by hand.

HINT:

If the bearing cap does not fit tightly on the carrier, the adjusting nuts are not threaded properly.

Reinstall the adjusting nuts if necessary.

11. ADJUST SIDE BEARING PRELOAD

(a) Tighten the 4 bearing cap bolts to the specified torque, then loosen them to the point where they can be turned by hand.

Torque: 85 N·m (870 kgf·cm, 63 ft·lbf)

(b) Fully tighten the 4 bearing cap bolts by hand.

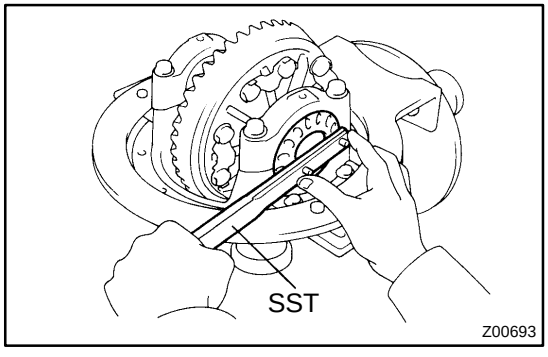

Z00693

(c) Using SST, tighten the adjusting nut on the ring gear back side until the ring gear has a backlash of about 0.2 mm (0.008 in.).

SST 09504–00011

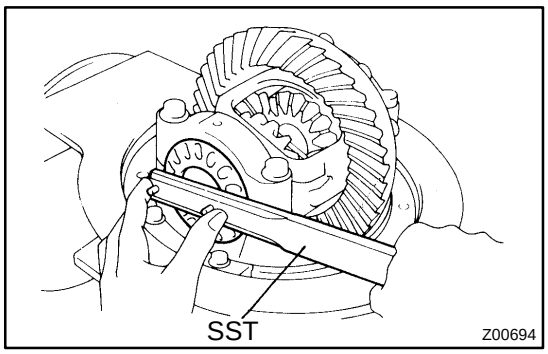

(d) With turning the ring gear, use SST to fully tighten the adjusting nut on the ring gear teeth side.
After the bearings are settled, loosen the adjusting nut on the drive pinion side.
SST 09504–00011

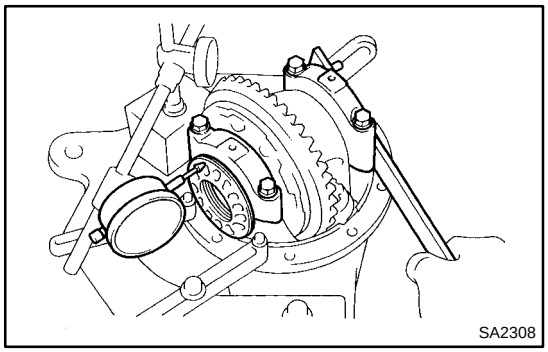

(e) Place a dial indicator on the top of the adjusting nut on the ring gear back side.
(f) Adjust the side bearing to zero preload by tightening the other adjusting nut until the pointer on the indicator begins to move.
(g) Tighten the adjusting nut 1 – 1.5 notches from the zero preload position.

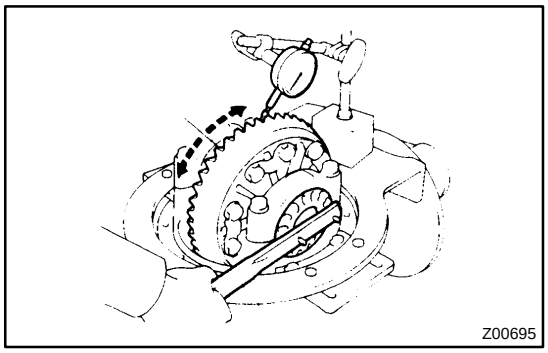

(h) Using a dial indicator, adjust the ring gear backlash until it is within the specified value.
Backlash: 0.13 – 0.18 mm (0.0051 – 0.0071 in.)

HINT:
The backlash is adjusted by turning the right and left adjusting nuts equal amount. For example, loosen the nut of the left side one notch and tighten the nut on the right side one notch.

(i) Torque the 4 bearing cap bolts.
Torque: 85 N·m (870 kgf·cm, 63 ft·lbf)

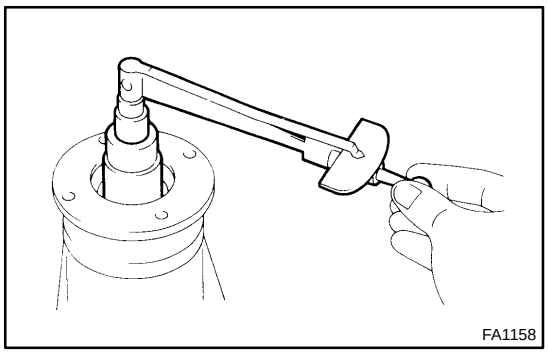

(j) Recheck the ring gear backlash.
Backlash: 0.13 – 0.18 mm (0.0051 – 0.0071 in.)
(k) Using a torque wrench, measure the preload with the teeth of the drive pinion and ring gear in contact.
Total preload (at starting):
Drive pinion preload plus 0.4 – 0.6 N·m (4 – 6 kgf·cm, 3.5 – 5.2 in.·lbf)

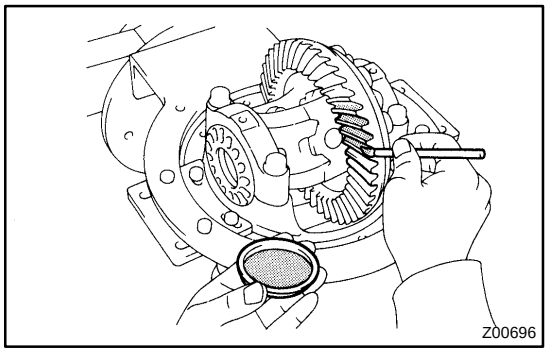

12. INSPECT TOOTH CONTACT BETWEEN RING GEAR AND DRIVE PINION

(a) Coat 3 or 4 teeth at 3 different positions on the ring gear with red lead primer.
(b) Hold the companion flange firmly and rotate the ring gear in both directions.
(c) Inspect the tooth pattern.

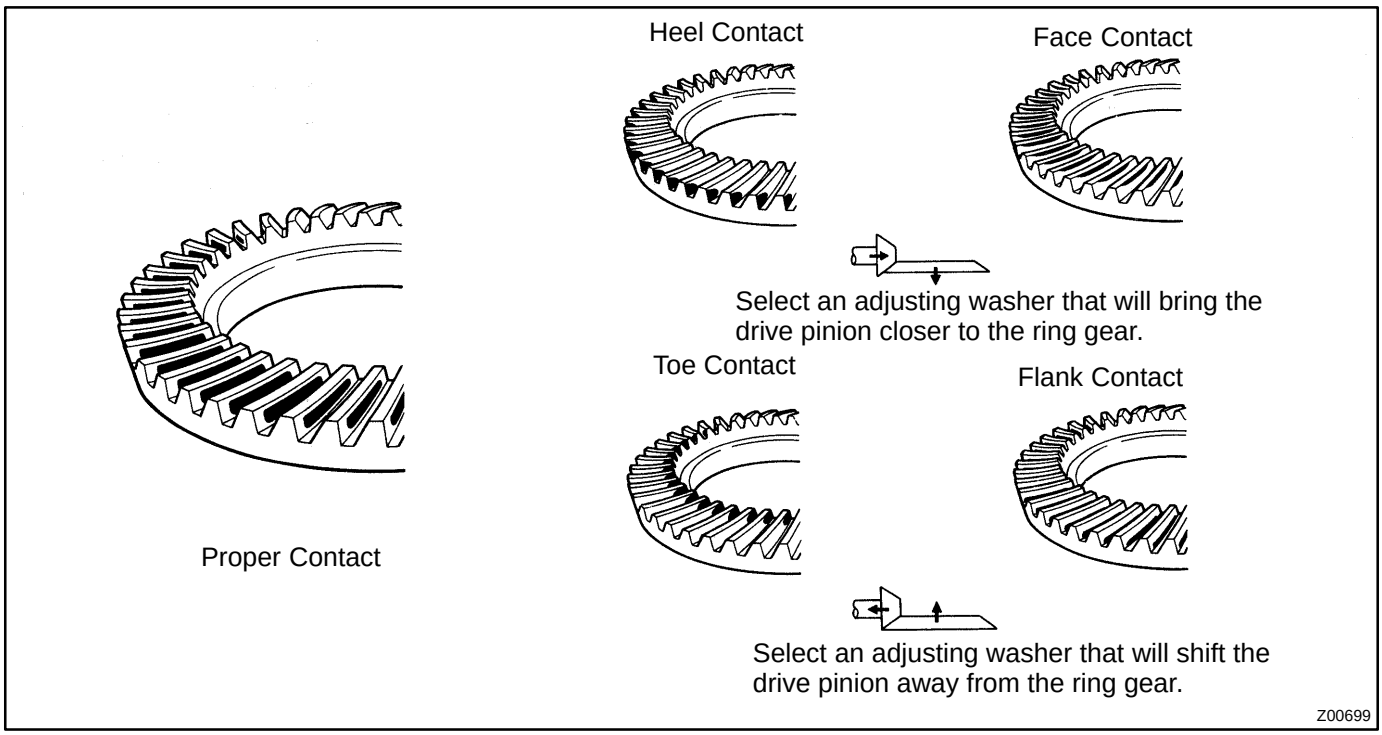

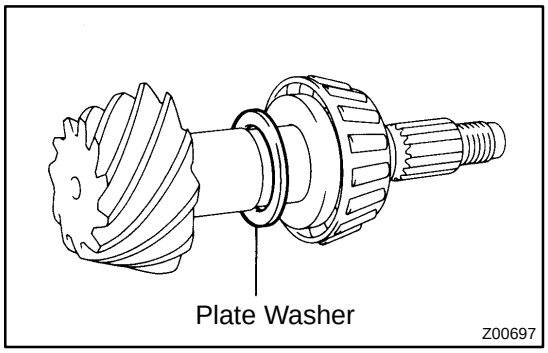

If the teeth are not contacting properly, use the following chart to select a proper washer for correction.

Washer thickness:

Thickness mm (in.)	Thickness mm (in.)
2.24 (0.0882)	2.51 (0.0988)
2.27 (0.0894)	2.54 (0.1000)
2.30 (0.0906)	2.57 (0.1012)
2.33 (0.0917)	2.60 (0.1024)
2.36 (0.0929)	2.63 (0.1035)
2.39 (0.0941)	2.66 (0.1047)
2.42 (0.0953)	2.69 (0.1059)
2.45 (0.0965)	2.72 (0.1071)
2.48 (0.0976)	–

13. REMOVE COMPANION FLANGE AND OIL SLINGER (See page SA–144)

14. REMOVE FRONT BEARING (See page SA–144)

15. INSTALL NEW BEARING SPACER, FRONT BEARING AND OIL SLINGER

(a) Install a new bearing spacer and place the front bearing and oil slinger.

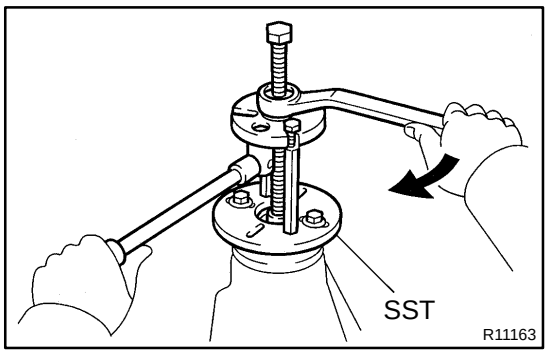

(b) Using SST and the companion flange, install the front bearing then remove the companion flange.
SST 09950–30012 (09951–03010, 09953–03010, 09954–03010, 09955–03030, 09956–03020)

16. INSTALL NEW OIL SEAL

(a) Coat a new oil seal lip with MP grease.

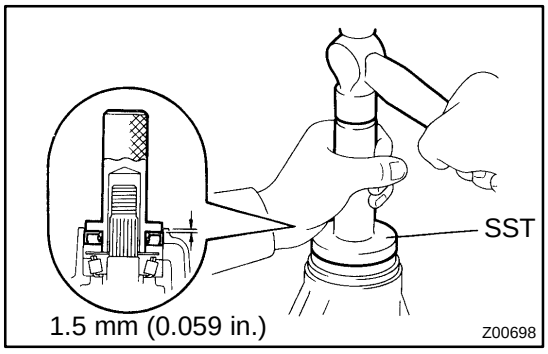

(b) Using SST and a hammer, install the oil seal.
SST 09554–30011
Oil seal drive in depth: 1.5 mm (0.059 in.)

17. INSTALL COMPANION FLANGE

(a) Place the companion flange.

(b) Coat the threads of a new nut with hypoid gear oil.

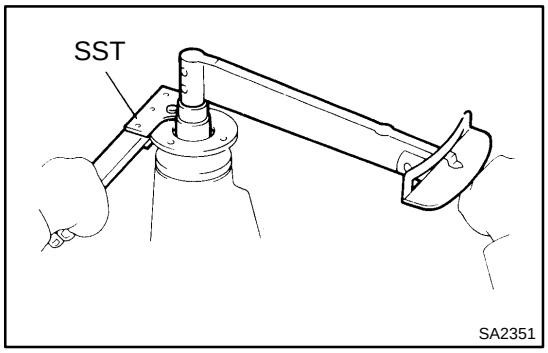

(c) Using SST to hold the flange, torque the nut.
SST 09330–00021
Torque: 108 N·m (1,100 kgf·cm, 80 ft·lbf)

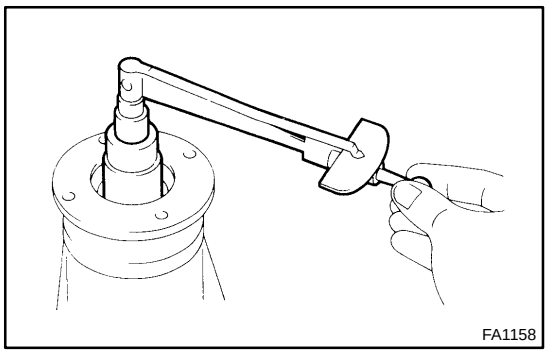

18. ADJUST DRIVE PINION PRELOAD

Using a torque wrench, measure the preload of the drive pinion using the backlash between the drive pinon and ring gear.

Preload (at starting):
New bearing
1.4 – 2.1 N·m (14 – 21 kgf·cm, 12.2 – 18.3 in.·lbf)
Reused bearing
0.6 – 1.0 N·m (6 – 10 kgf·cm, 5.2 – 8.7 in.·lbf)

If the preload is greater than the specified value, replace the bearing spacer.

If the preload is less than the specified value, retighten the nut 13 N·m (130 kgf·cm, 9 ft·lbf) a little at a time until the specified preload is reached.

Torque: 235 N·m (2,400 kgf·cm, 174 ft·lbf) or less

If the maximum torque is exceeded while retightening the nut, replace the bearing spacer and repeat the preload adjusting procedure. Do not loosen the pinion nut to reduce the preload.

19. CHECK COMPANION FLANGE RUNOUT (See page SA–144)

20. STAKE DRIVE PINION NUT

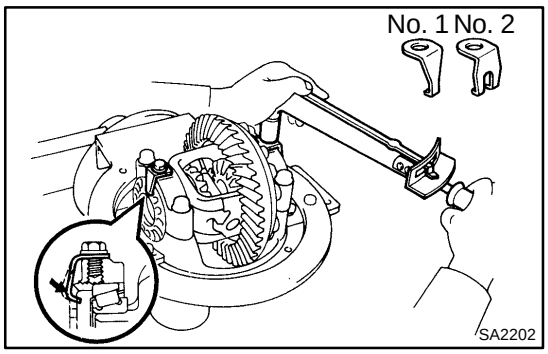

21. INSTALL ADJUSTING NUT LOCKS

(a) Select either a lock No. 1 or No. 2, whichever will fit the adjusting nuts.

(b) Install new nut locks on the bearing caps.
Torque: 13 N·m (130 kgf·cm, 9 ft·lbf)

SA0BI–02

REMOVAL

1. DRAIN HYPOID GEAR OIL

2. REMOVE REAR AXLE SHAFTS (See page SA–129)

3. DISCONNECT REAR PROPELLER SHAFT (See page PR–3)

4. REMOVE DIFFERENTIAL CARRIER ASSEMBLY

(a) Remove the 10 nuts, washers and differential carrier assembly.

NOTICE:

Be careful not to damage the installation surface.

Torque: 25 N·m (250 kgf·cm, 18 ft·lbf)

(b) Remove the gasket.

SA0BK–03

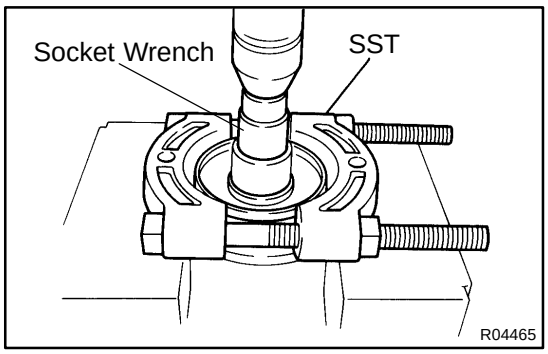

REPLACEMENT

REPLACE COMPANION FLANGE DUST DEFLECTOR

(a) Using SST, a socket wrench and a press, remove the dust deflector.
SST 09950–00020

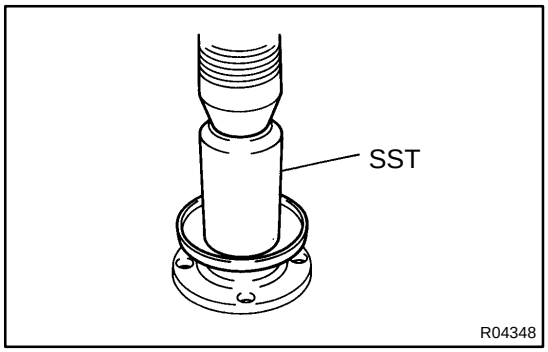

(b) Using SST and a press, install a new dust deflector.
SST 09636–20010

REAR DIFFERENTIAL CARRIER (3RZ–FE, 5VZ–FE w/ Diff. Lock)

SA09T–04

COMPONENTS

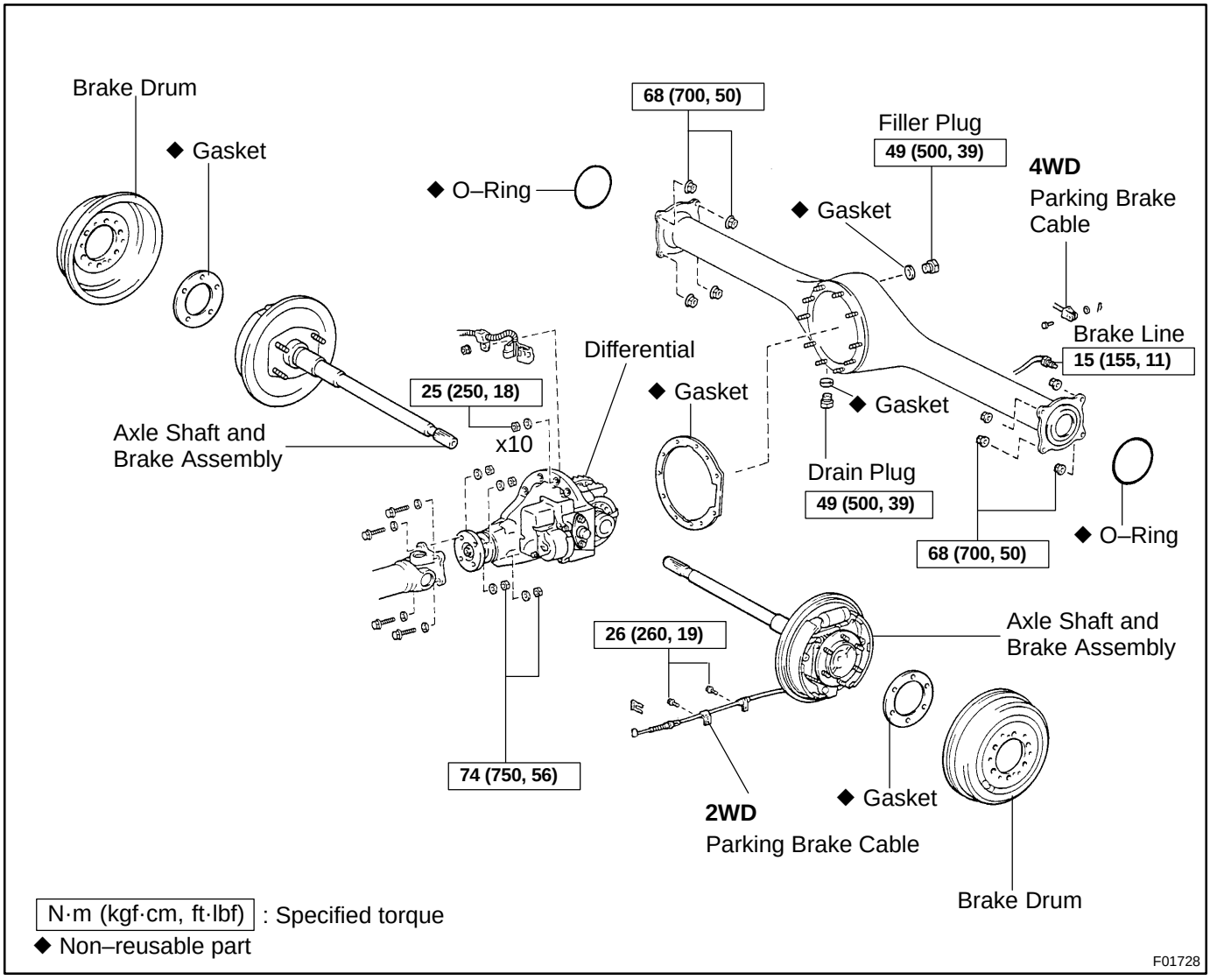

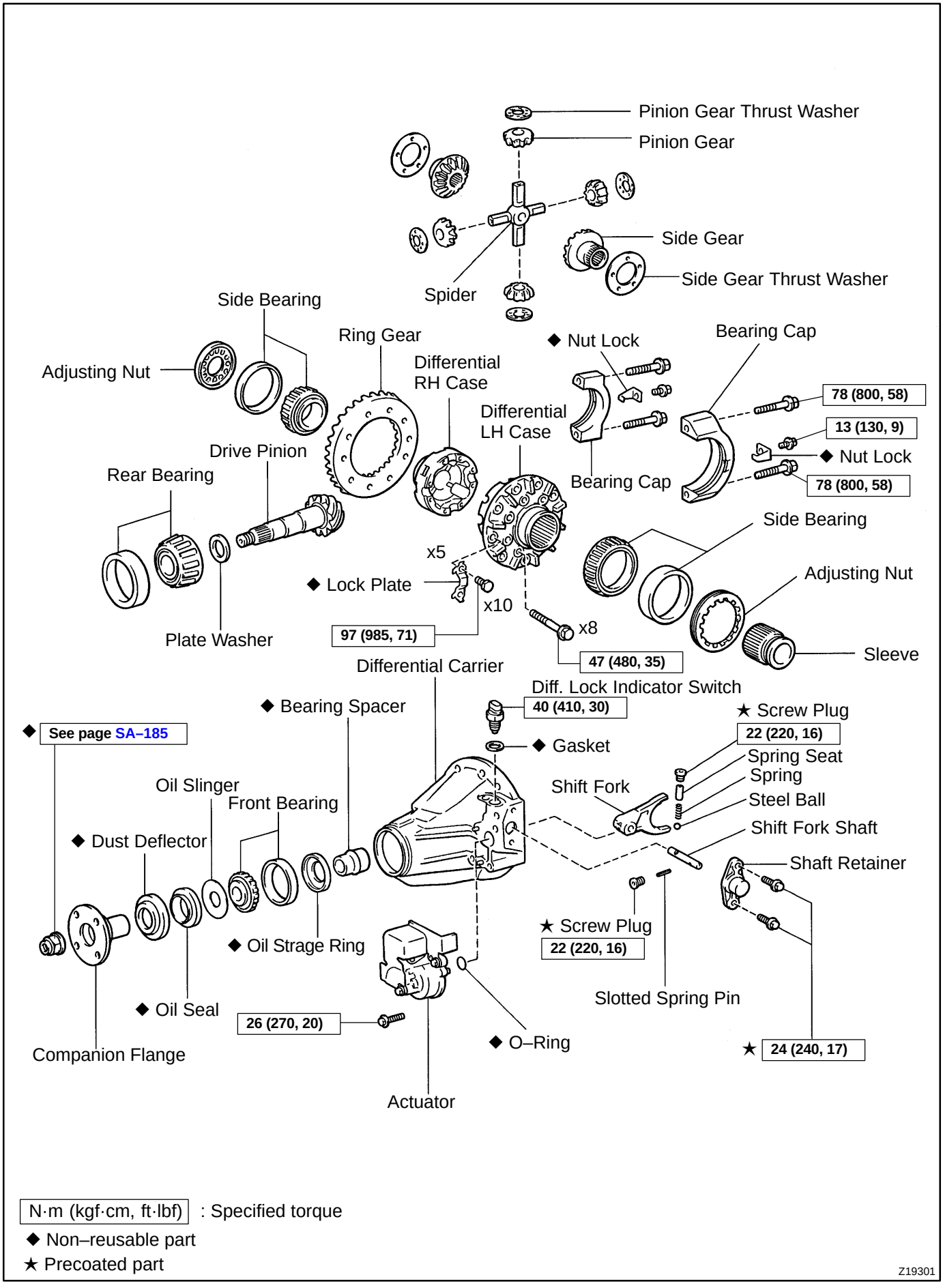

N·m (kgf·cm, ft·lbf) : Specified torque
◆ Non–reusable part
★ Precoated part

Z19301

SA09V–06

DISASSEMBLY

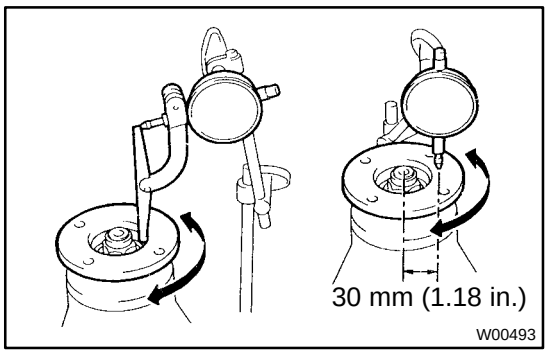

1. CHECK COMPANION FLANGE RUNOUT

Using a dial indicator, measure the vertical and lateral runout of the companion flange.

Maximum: runout: 0.10 mm (0.0039 in.)

If the runout exceeds the maximum, replace the companion flange.

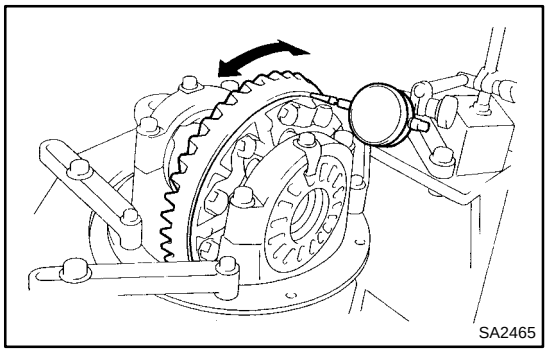

2. CHECK RING GEAR RUNOUT

Using a dial indicator, measure the ring gear runout.

Maximum runout: 0.10 mm (0.0039 in.)

If the runout exceeds the maximum, replace the ring gear.

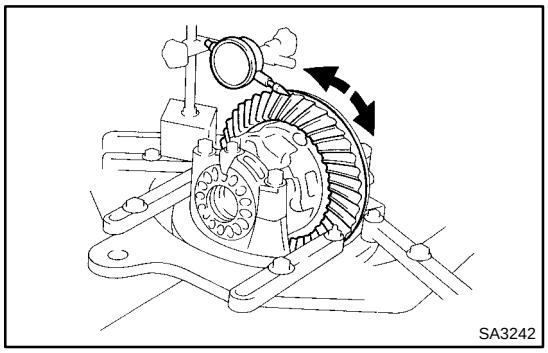

3. CHECK RING GEAR BACKLASH

Using a dial indicator, while holding the companion flange, measure the ring gear backlash.

Backlash: 0.13 – 0.18 mm (0.0051 – 0.0071 in.)

HINT:

Measure at 3 or more positions around the circumference of the ring gear.

If the backlash is not within the specified value, adjust the side bearing preload or repair as necessary.

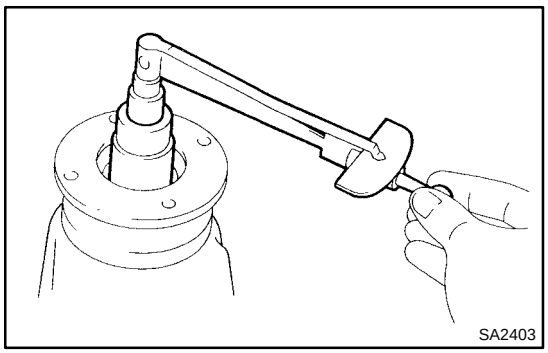

4. MEASURE DRIVE PINION PRELOAD

Using a torque wrench, measure the preload of the drive pinion using the backlash between the drive pinion and ring gear.

Preload (at starting):

0.5 – 0.8 N·m (5 – 8 kgf·cm, 4.3 – 6.9 in.·lbf)

5. CHECK TOTAL PRELOAD

Using a torque wrench, measure the total preload with the teeth of the drive pinion and ring gear in contact.

Total preload (at starting):

Drive pinion preload plus 0.4 – 0.6 N·m (4 – 6 kgf·cm, 3.5 – 5.2 in.·lbf)

If necessary, disassemble and inspect the differential.

6. CHECK TOOTH CONTACT BETWEEN RING GEAR AND DRIVE PINION (See page SA–185)

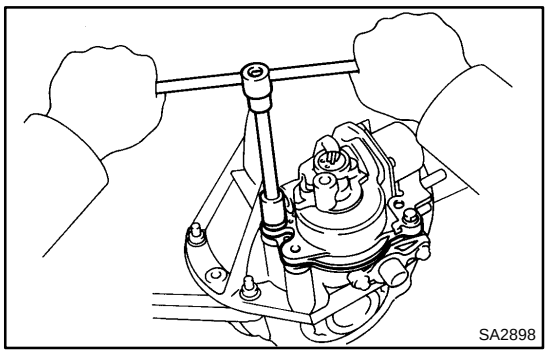

7. REMOVE ACTUATOR

(a) Remove the bolt and actuator from the differential carrier.

(b) Remove the O–ring.

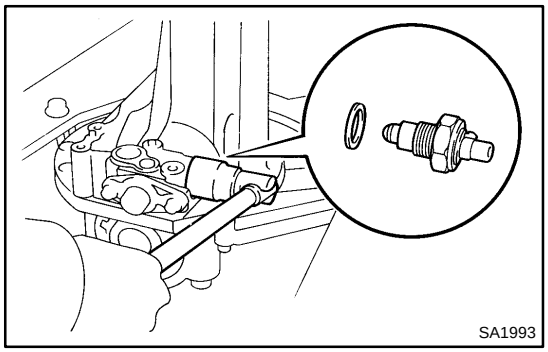

8. REMOVE DIFF. LOCK INDICATOR SWITCH

Remove the indicator switch and gasket.

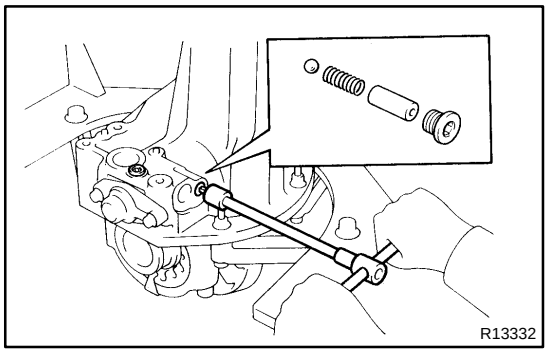

9. REMOVE SHIFT FORK SHAFT

(a) Using a hexagon wrench, remove the 2 straight screw plugs.

(b) Remove the spring seat, spring and steel ball.

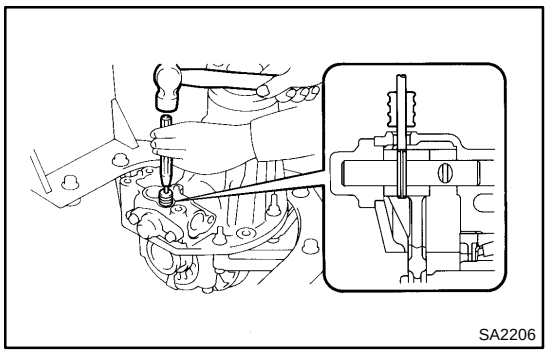

(c) Using a pin punch and hammer, remove the slotted spring pin.

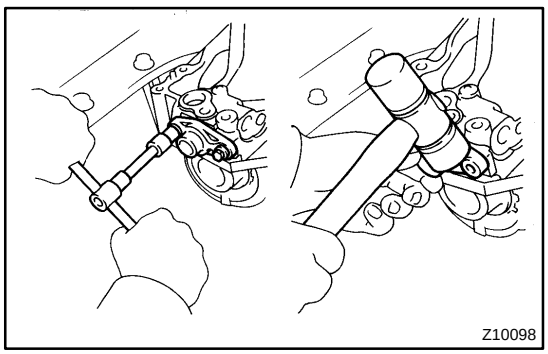

(d) Remove the 2 bolts from the shaft retainer.

(e) Using a plastic hammer, remove the shaft retainer.

(f) Remove the shift fork shaft.

10. REMOVE COMPANION FLANGE

(a) Using a chisel and hammer, unstake the nut.

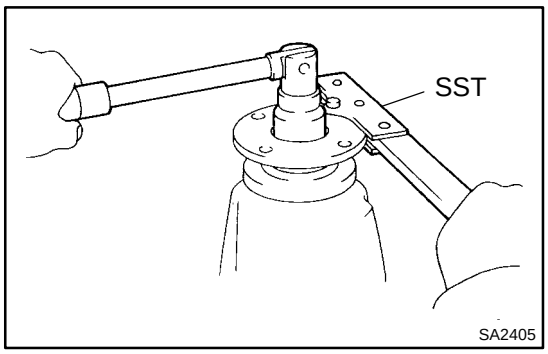

(b) Using SST to hold the flange, remove the nut.
SST 09330–00021

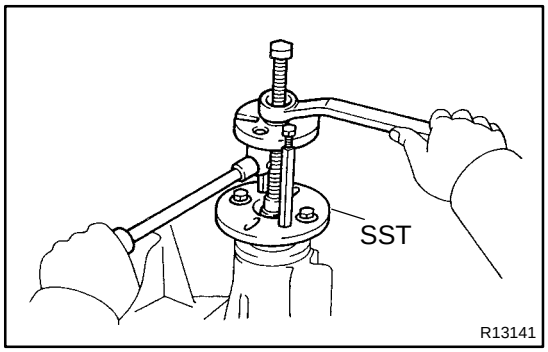

(c) Using SST, remove the companion flange.
SST 09950–30012 (09951–03010, 09953–03010, 09954–03010, 09955–03030, 09956–03020)

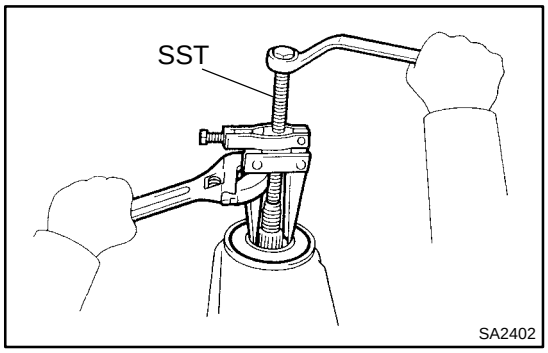

11. REMOVE OIL SEAL AND OIL SLINGER

(a) Using SST, remove the oil seal from the differential carrier.
SST 09350–32014 (09308–10010)

(b) Remove the oil slinger.

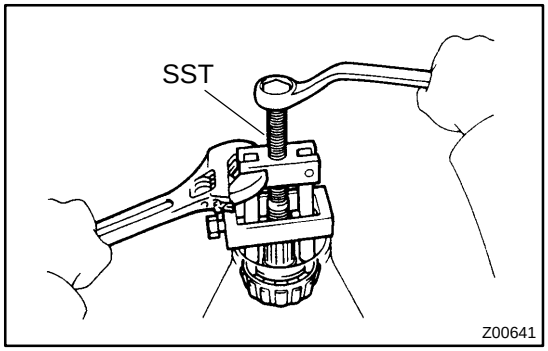

12. REMOVE FRONT BEARING

Using SST, remove the front bearing from the drive pinion.
SST 09556–22010

If the front bearing is damage or worn, replace the front bearing.

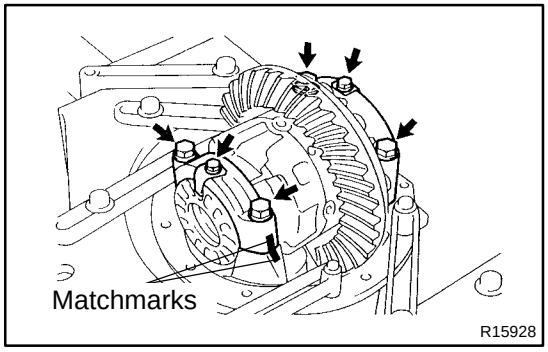

13. REMOVE DIFFERENTIAL CASE

(a) Place matchmarks on the bearing cap and differential carrier.

(b) Remove the 2 adjusting nut locks.

(c) Remove the 4 bolts and 2 bearing caps.

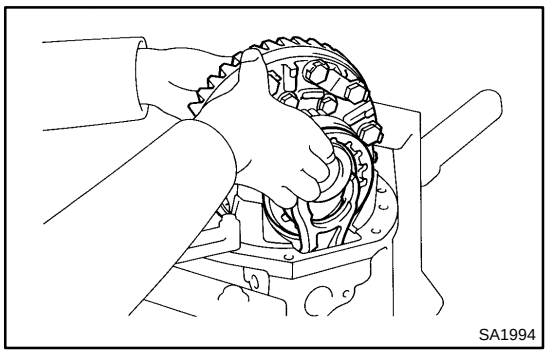

(d) Remove the differential case with side bearing outer race, adjusting nuts and sleeve from the differential carrier.
(e) Remove the shift fork.

14. REMOVE DRIVE PINION AND BEARING SPACER

(a) Remove the drive pinion with the rear bearing.
(b) Remove the bearing spacer.

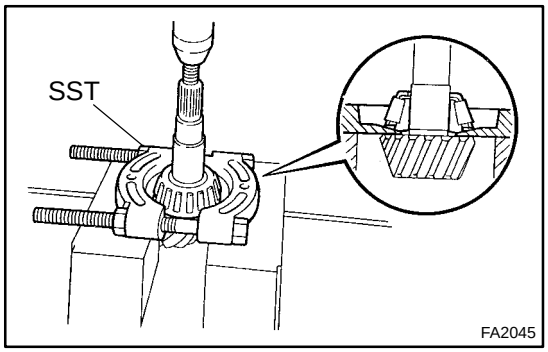

15. REMOVE DRIVE PINION REAR BEARING

(a) Using SST and a press, remove the bearing from the drive pinion.
SST 09950–00020

HINT:
If the drive pinion or ring gear is damaged, replace them as a set.

(b) Remove the plate washer from the drive pinion.

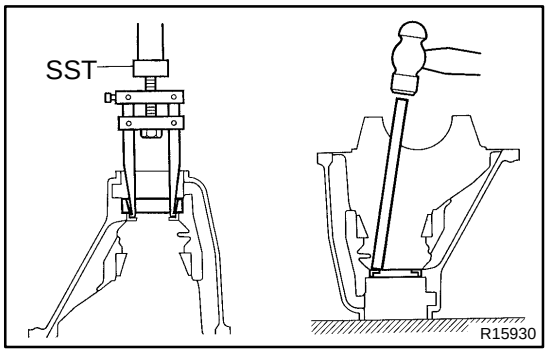

16. REMOVE FRONT AND REAR BEARING OUTER RACES AND OIL STORAGE RING

(a) Using SST, remove the front bearing outer race.
SST 09308–00010
(b) Using a brass bar and hammer, remove the oil storage ring.
(c) Using a brass bar and hammer, remove the rear bearing outer race.

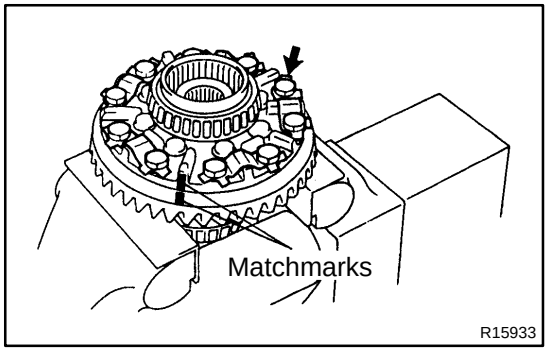

17. REMOVE RING GEAR

(a) Place matchmarks on the ring gear and differential case.
(b) Using a screwdriver and hammer, unstake the 5 lock plate.
(c) Remove the 10 ring gear set bolts and 5 lock plates.
(d) Using a plastic hammer, tap on the ring gear to separate it from the differential case.

18. CHECK DIFFERENTIAL CASE RUNOUT

(a) Install the differential case in the differential carrier and tighten the adjusting nut just to where there is no play in the bearing.

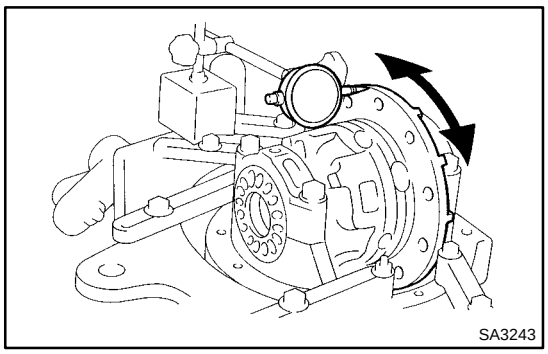
SA3243

(b) Using a dial indicator, measure the differential case runout.

Maximum case runout: 0.07 mm (0.0028 in.)

(c) Remove the differential case.

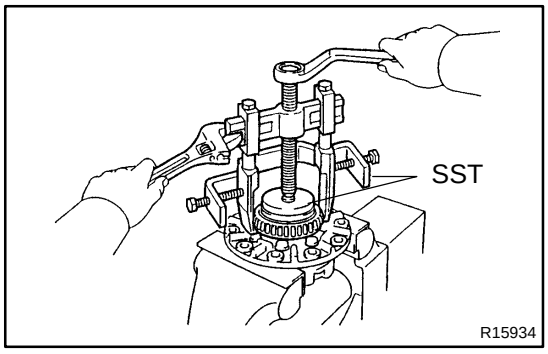

R15934

19. REMOVE SIDE BEARING FROM DIFFERENTIAL CASE

Using SST, remove the side bearing from the differential case.

SST 09950–40011 (09951–04010, 09952–04010, 09953–04020, 09954–04010, 09955–04061, 09957–04010, 09958–04011), 09950–60010 (09951–00480), 09950–60020 (09951–00730)

HINT:

Fix the claws of SST to the notches in the differential case.

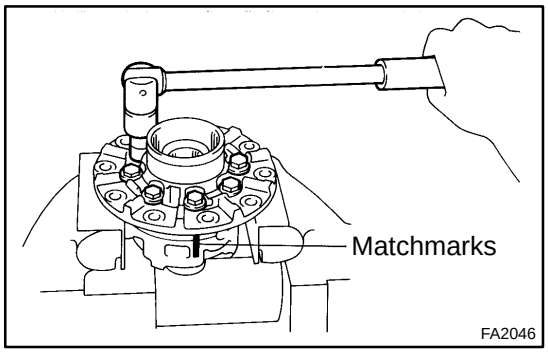

FA2046

20. DISASSEMBLE DIFFERENTIAL CASE

(a) Place matchmarks on the RH and LH cases.

(b) Remove the 8 bolts uniformly, a little at a time.

(c) Using a plastic hammer, separate the RH and LH cases.

(d) Remove the 2 side gears, side gear thrust washers, 4 pinion gears, 4 pinion gear thrust washers and spider from the differential case.

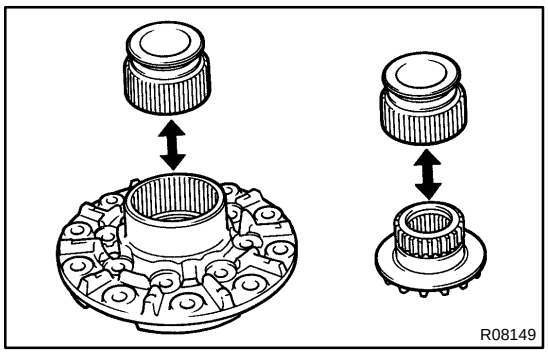
R08149

21. INSPECT SLEEVE

(a) Install the sleeve to the differential case (LH) and check it moves smoothly.

(b) Install the sleeve to the side gear and check it moves smoothly.

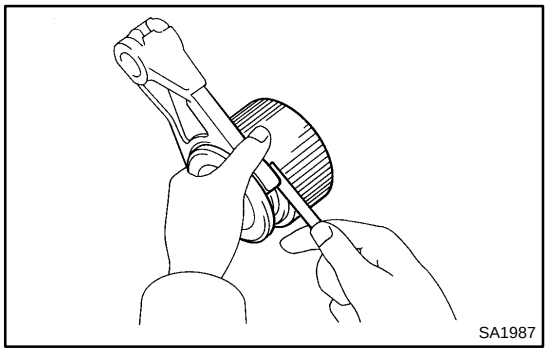
SA1987

22. MEASURE CLEARANCE OF SHIFT FORK AND SLEEVE

Using a feeler gauge, measure the clearance between the shift fork and sleeve.

Clearance (Reference):
0.15 – 0.35 mm (0.006 – 0.014 in.)

SA09Y–03

INSTALLATION

Installation is in the reverse order of removal (See page SA–178).

HINT:

After installation, fill the differential with hypoid gear oil (See page SA–137) and check the diff. lock operation (See page SA–199).

SA1GE–03

REASSEMBLY

HINT:

- Using a shop rag, clean off any foreign object from the parts.
- Apply all of the sliding and rotating surfaces with hypoid gear oil.

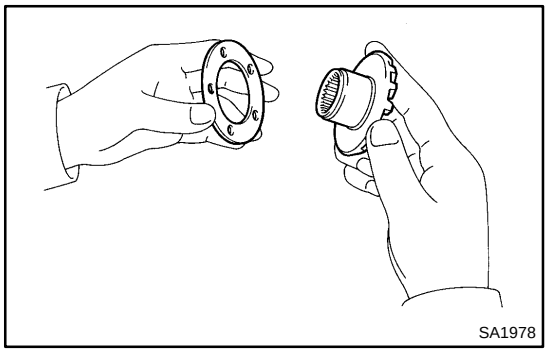

1. ASSEMBLE DIFFERENTIAL CASE

(a) Install the side gear thrust washer to the side gear.

(b) Install the side gear to the RH case.

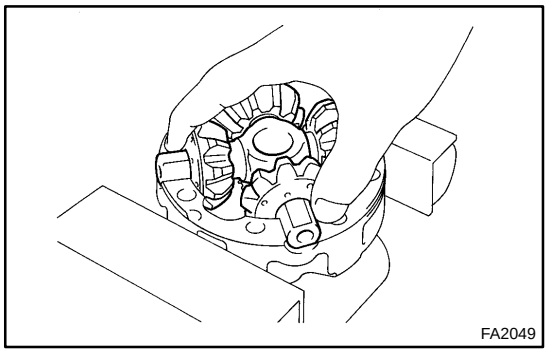

(c) Install the 4 pinion gears and pinion gear thrust washers to the spider.

(d) Install the pinion gear with spider to the RH case.

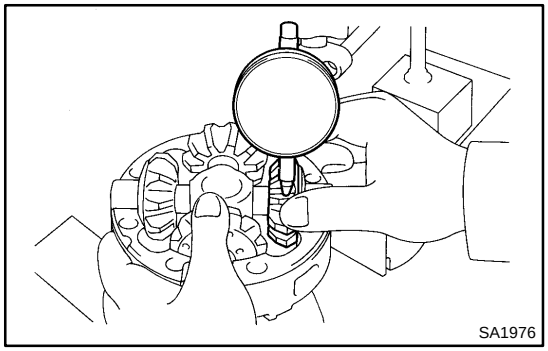

(e) Using a dial indicator, measure the side gear backlash with holding the side gear and spider.

Backlash: 0.05 – 0.20 mm (0.0020 – 0.0079 in.)

HINT:

- Measure at all 4 locations.
- Measure the backlash at the RH case and the LH case.

If the backlash is not within the specified value, install a thrust washer of a different thickness.

Thrust washer thickness:

Thickness mm (in.)	Thickness mm (in.)
0.9 (0.035)	1.2 (0.047)
1.0 (0.039)	1.3 (0.051)
1.1 (0.043)	–

(f) Install the side gear and side gear thrust washer to the RH case.

(g) Install the pinion gears and spider to the RH case.

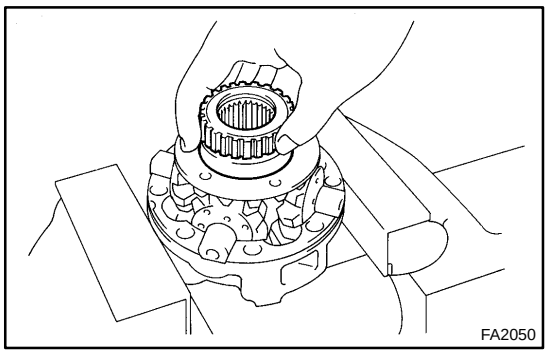

(h) Install the side gear and side gear thrust washer to the RH case.
(i) Align the matchmarks on the RH and LH cases.
(j) Install and torque the 8 bolts uniformly, a little at a time.
Torque: 47 N·m (480 kgf·cm, 35 ft·lbf)

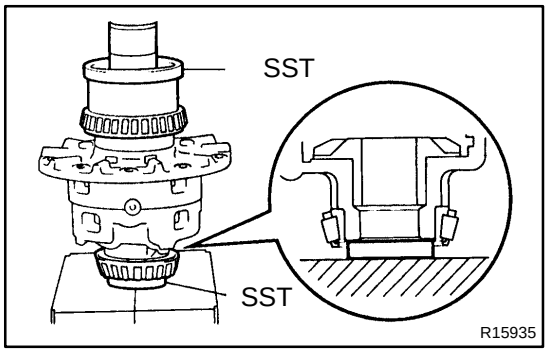

2. INSTALL SIDE BEARINGS

Using SST and a press, install the side bearings on the differential case.

SST 09950–60010 (09951–00480, 09951–00550), 09950–60020 (09951–00730)

3. INSTALL RING GEAR ON DIFFERENTIAL CASE

(a) Clean the contact surfaces of the differential case and ring gear.
(b) Heat the ring gear to about 100˚C (212˚F) in boiling water.

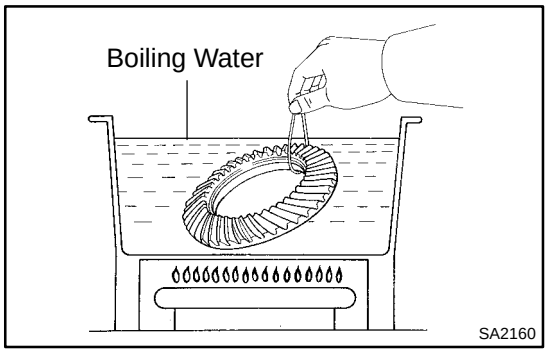

(c) Carefully take the ring gear out of the boiling water.
(d) After the moisture on the ring gear has completely evaporated, quickly install the ring gear to the differential case.

HINT:

Align the matchmarks on the ring gear and differential case.

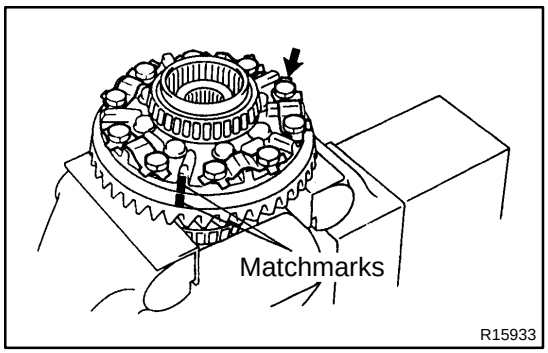

(e) Temporarily install 5 new lock plates and 10 set bolts.
(f) After the ring gear cools down enough, tighten the set bolts uniformly and a little at a time.
Torque: 97 N·m (985 kgf·cm, 71 ft·lbf)

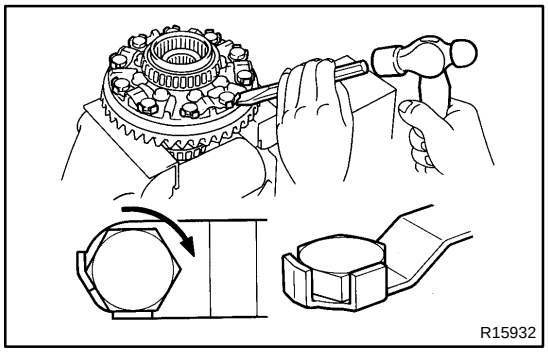

(g) Using a chisel and hammer, stake the lock plates.

HINT:

Stake the claws of the lock plates to fix the bolts. For the claw contacting the protruding portion of the bolt, stake only the half of it along the tightening direction.

4. CHECK RING GEAR RUNOUT

(a) Install the differential case into the carrier and tighten the adjusting nut just to fill the play in the bearings.
(b) Install the bearing caps.

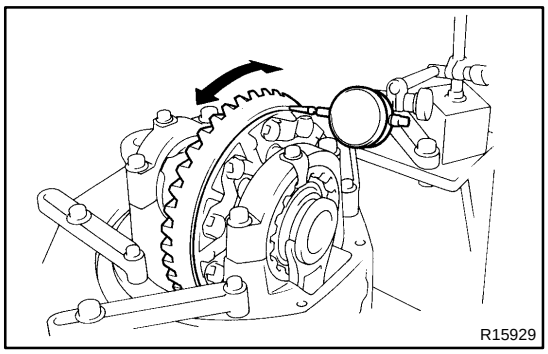

(c) Using a dial indicator, check the ring gear runout.
Maximum runout: 0.10 mm (0.0039 in.)

(d) Remove the bearing caps and differential case.

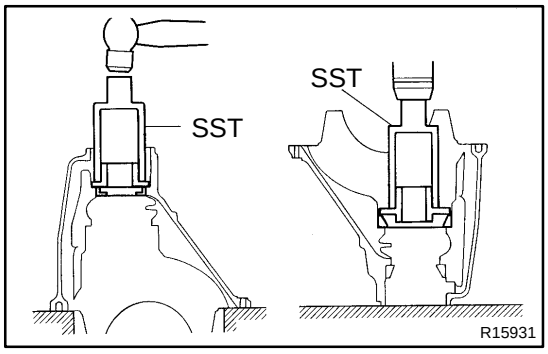

5. INSTALL NEW OIL STORAGE RING AND DRIVE PINION FRONT AND REAR BEARING OUTER RACES

(a) Using SST and a hammer, install new oil storage ring.
SST 09316–60011 (09316–00011, 09316–00021)

(b) Using SST and a press, install the outer races.
SST 09316–60011 (09316–00011, 09316–00021, 09316–00051)

6. INSTALL DRIVE PINION FRONT BEARING

(a) Install the plate washer on the drive pinion.

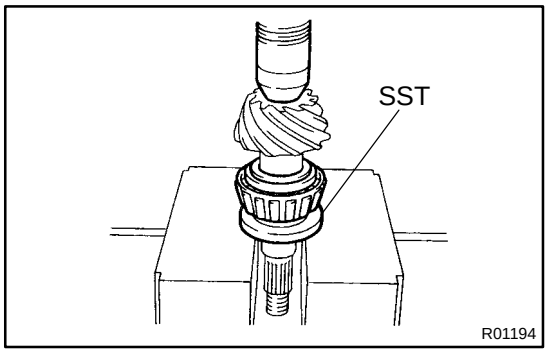

(b) Using SST and a press, install the rear bearing onto the drive pinion.
SST 09506–30012

7. TEMPORARILY ADJUST DRIVE PINION PRELOAD

(a) Install the drive pinion, front bearing and oil slinger.

HINT:
Assemble the spacer and oil seal after adjusting the gear contact pattern.

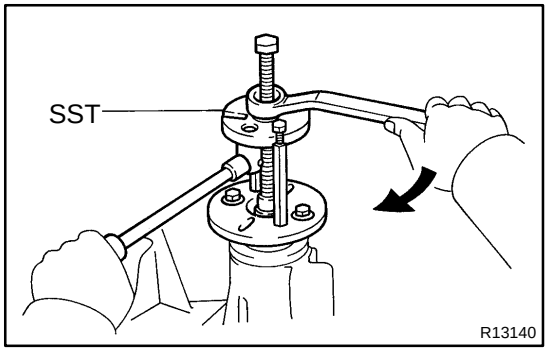

(b) Install the companion flange with SST.
SST 09950–30012 (09951–03010, 09953–03010, 09954–03010, 09955–03030, 09956–03020)

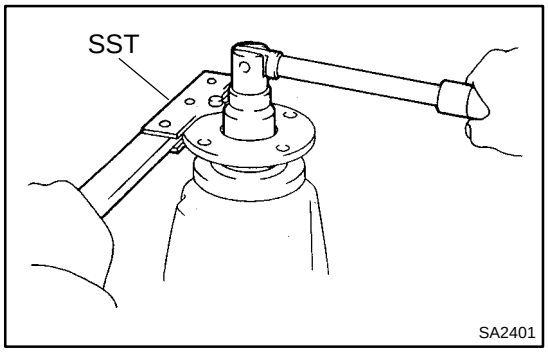

(c) Adjust the drive pinion preload by tightening the companion flange nut.
Using SST to hold the flange, tighten the nut.
SST 09330–00021

NOTICE:
As there is no spacer, tighten a little at a time, being careful not to overtighten.

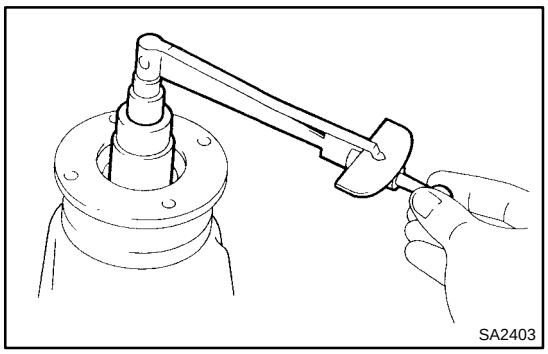
SA2403

(d) Using a torque wrench, measure the preload of the drive pinion using the backlash between the drive pinion and ring gear.

Preload (starting):
New bearing
0.9 – 1.6 N·m (10 – 16 kgf·cm, 8.7 – 13.9 in.·lbf)
Reused bearing
0.5 – 0.8 N·m (5 – 8 kgf·cm, 4.3 – 6.9 in.·lbf)

HINT:
Measure the total preload after first turning the bearing clockwise and counterclockwise several times to make the bearing smooth.

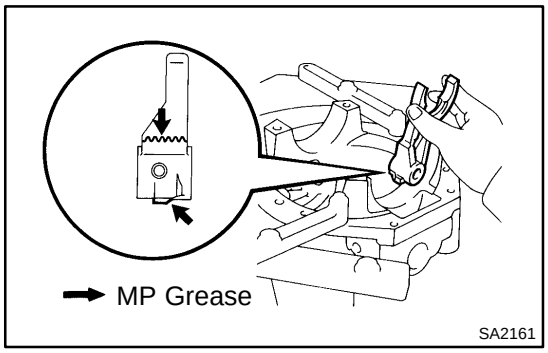

SA2161

8. INSTALL DIFFERENTIAL CASE IN CARRIER

(a) Apply MP grease on the rack of the shift fork and connecting part of the indicator switch.

(b) Insert the shift fork into the differential carrier, as shown in the illustration.

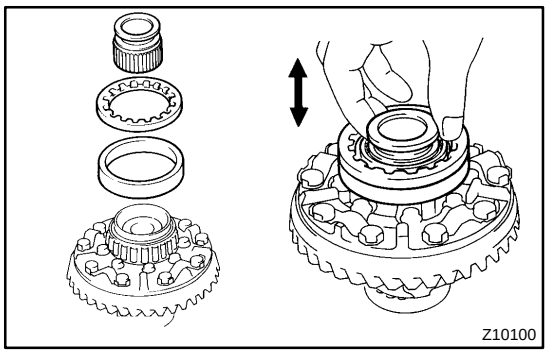
Z10100

(c) Place the outer races, adjusting nuts on the left side to sleeve.

HINT:
Check that the sleeve moves smoothly.

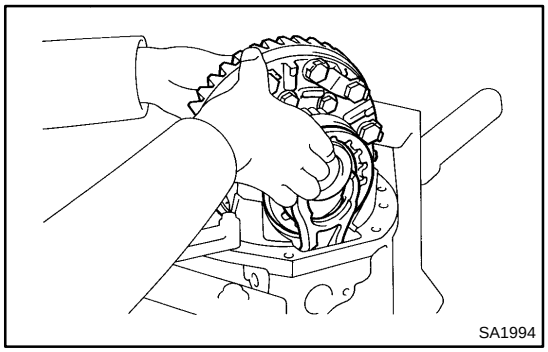
SA1994

(d) Install the shift fork in the groove of the sleeve holding it by hand and install the differential case in the carrier.

HINT:
Make sure that there is a backlash between the ring gear and drive pinion.

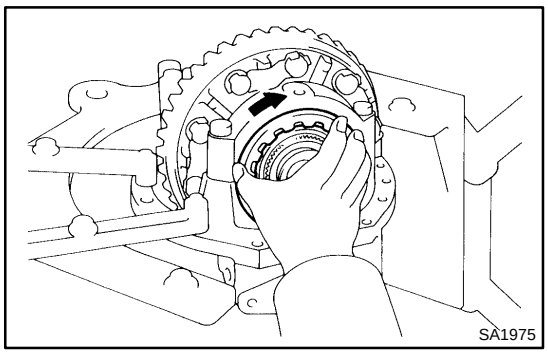

9. TEMPORARILY INSTALL BEARING CAPS

Align the matchmarks on the cap and carrier. Screw in the 4 bearing cap bolts 2 or 3 turns and press down the bearing cap by hand.

HINT:

If the bearing cap does not fit tightly on the carrier, the adjusting nuts are not threaded properly.

Reinstall the adjusting nuts if necessary.

10. ADJUST SIDE BEARING PRELOAD

(a) Torque the 4 bearing cap bolts to the specified torque, then loosen them to the point where the adjusting nuts can be turned by hand.

Torque: 78 N·m (800 kgf·cm, 58 ft·lbf)

(b) Fully tighten the 4 bearing cap bolts by hand.

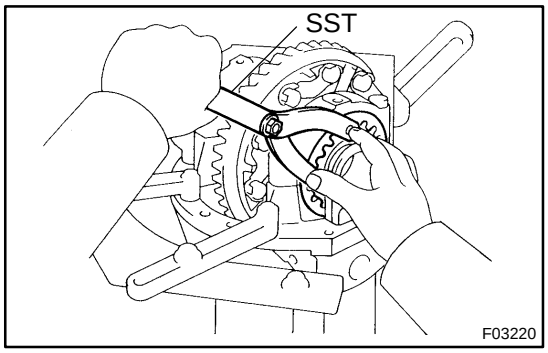

(c) Using the SST, torque the adjusting nut on the ring gear side until the ring has a backlash of about 0.2 mm (0.008 in.).

SST 09960–10010 (09662–01000, 09963–00700)

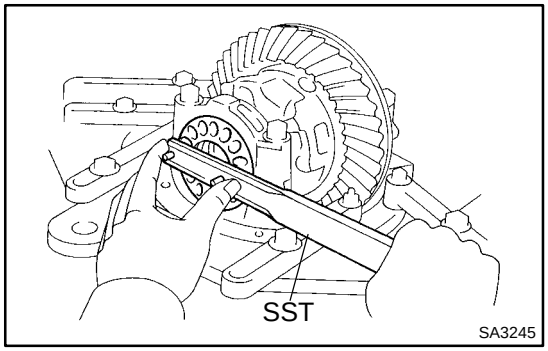

(d) With turning the ring gear, use the SST to fully tighten the adjusting nut on the drive pinion side. After the bearings are settled, loosen the adjusting nut on the drive pinion side.

SST 09504–00011

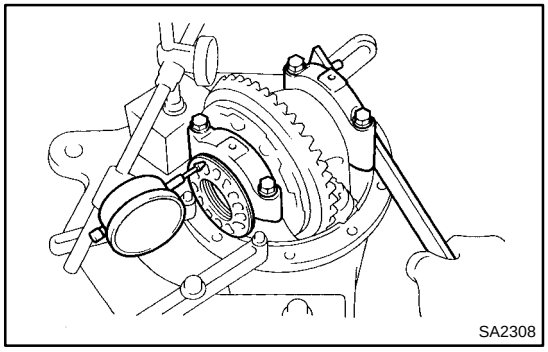

(e) Place a dial indicator on the top of the adjusting nut on the ring gear side.

(f) Adjust the side bearing to zero preload by tightening the other adjusting nut until the pointer on the indicator begins to move.

(g) Torque the adjusting nut 1 – 1.5 notches from the zero preload position.

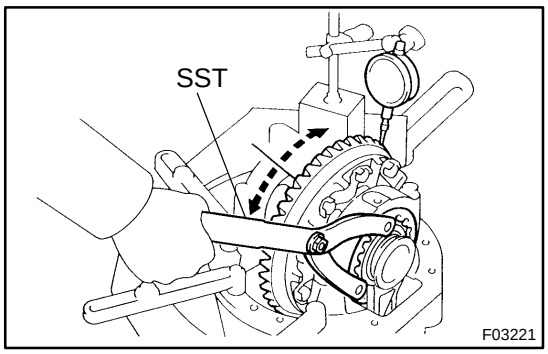

(h) Using a dial indicator, adjust the ring gear backlash until it is within specified value.
Backlash: 0.13 – 0.18 mm (0.0051 – 0.0071 in.)

HINT:
The backlash is adjusted by turning the right and left adjusting nuts by equal amount. For example, loosen the nut on the left side one notch and torque the nut on the right side one notch.

(i) Torque the bearing cap bolts.
Torque: 78 N·m (800 kgf·cm, 58 ft·lbf)

(j) Recheck the ring gear backlash.
Backlash: 0.13 – 0.18 mm (0.0051 – 0.0071 in.)

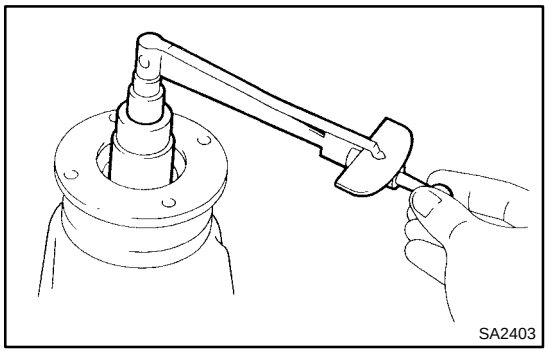

(k) Using a torque wrench, measure the preload with the teeth of the drive pinion and ring gear in contact.
Total preload (at starting):
Drive pinion preload plus 0.4 – 0.6 N·m (4 – 6 kgf·cm, 3.5 – 5.2 in.·lbf)

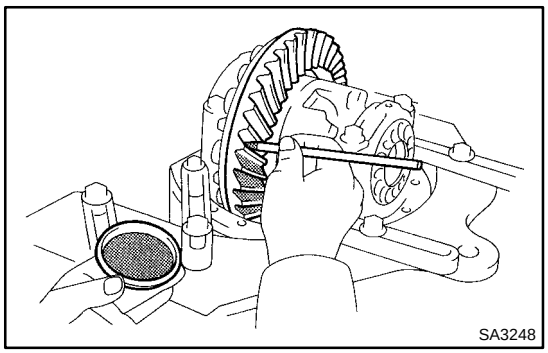

11. INSPECT TOOTH CONTACT BETWEEN RING GEAR AND DRIVE PINION

(a) Coat 3 or 4 teeth at 3 different positions on the ring gear with red lead primer.

(b) Hold the companion flange firmly and rotate the ring gear in both directions.

(c) Inspect the tooth pattern.

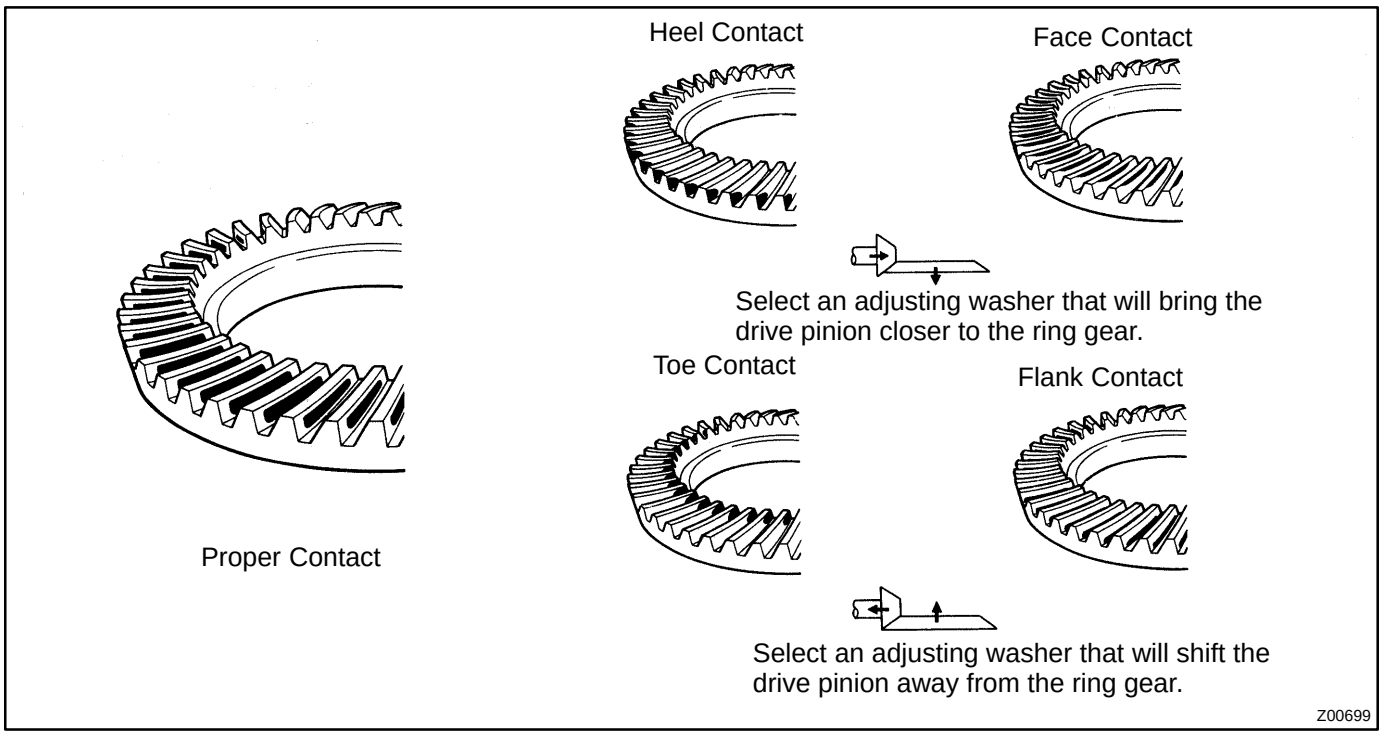

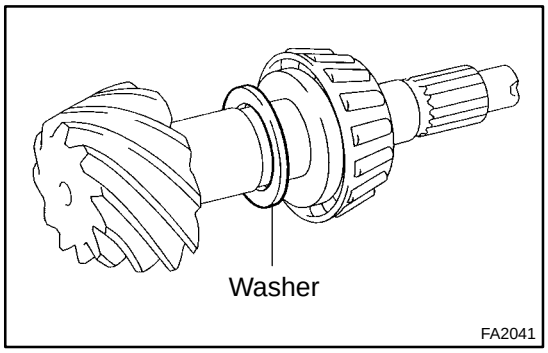

If the teeth are not contacting properly, use the following chart to select a proper washer for correction.

Washer thickness:

Thickness mm (in.)	Thickness mm (in.)
1.70 (0.0669)	2.03 (0.0799)
1.73 (0.0681)	2.06 (0.0811)
1.76 (0.0693)	2.09 (0.0823)
1.79 (0.0705)	2.12 (0.0835)
1.82 (0.0717)	2.15 (0.0846)
1.85 (0.0728)	2.18 (0.0858)
1.88 (0.0740)	2.21 (0.0870)
1.91 (0.0752)	2.24 (0.0882)
1.94 (0.0764)	2.27 (0.0894)
1.97 (0.0776)	2.30 (0.0906)
2.00 (0.0787)	2.33 (0.0917)

12. REMOVE COMPANION FLANGE (See page SA–179)

13. REMOVE OIL SLINGER AND FRONT BEARING (See page SA–179)

14. INSTALL BEARING SPACER AND FRONT BEARING

(a) Place a new bearing spacer on the shaft.

(b) Place the front bearing and oil slinger.

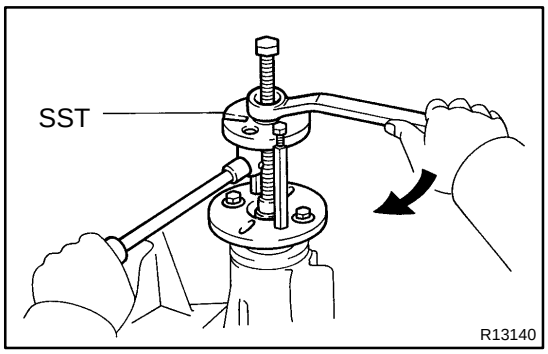

(c) Using SST and the companion flange, install the front bearing then remove the companion flange.
SST 09950–30012 (09951–03010, 09953–03010, 09954–03010, 09955–03030, 09956–03020)

15. INSTALL OIL SEAL

(a) Coat a new oil seal lip with MP grease.

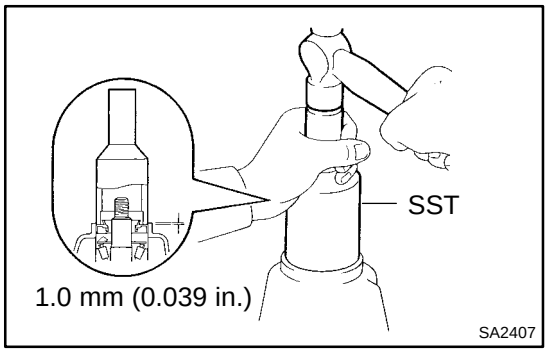

(b) Using SST and a hammer, install a new oil seal.
SST 09214–76011
Oil seal drive in depth: 1.0 mm (0.039 in.)

16. INSTALL COMPANION FLANGE

(a) Place the companion flange on the drive pinion.

(b) Coat the threads of a new nut with hypoid gear oil.

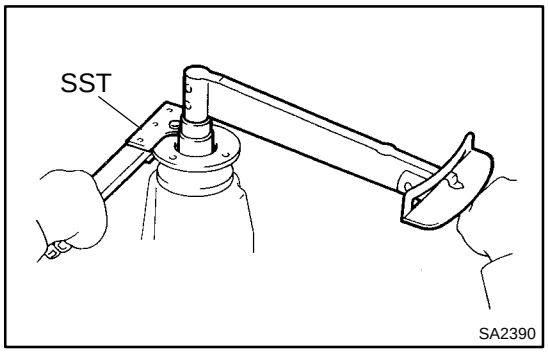

(c) Using SST to hold the flange, tighten the nut.
SST 09330–00021
Torque: 196 N·m (2,000 kgf·cm, 145 ft·lbf)

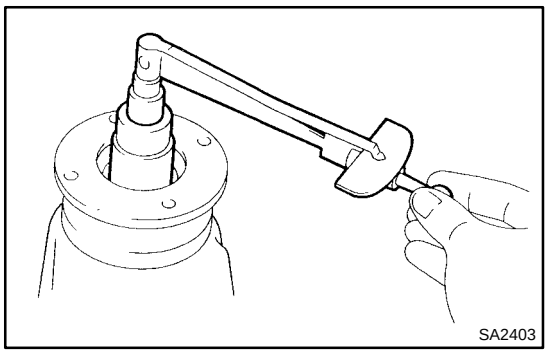

17. ADJUST DRIVE PINION PRELOAD

Using a torque wrench, measure the preload of the drive pinion using the backlash between the drive pinion and ring gear.

Preload (at starting):
New bearing
0.9 – 1.6 N·m (10 – 16 kgf·cm, 8.7 – 13.9 in.·lbf)
Reuse bearing
0.5 – 0.8 N·m (5 – 8 kgf·cm, 4.3 – 6.9 in.·lbf)

If preload is greater than the specified value, replace the bearing spacer.

If preload is less than the specified value, retighten the nut a little at a time with a torque of 13 N·m (130 kgf·cm, 9 ft·lbf) until the specified preload is reached.

Torque: 343 N·m (3,500 kgf·cm, 253 ft·lbf) or less

If the maximum torque is exceeded while retightening the nut, replace the bearing spacer and repeat the preload adjusting procedure. Do not loosen the pinion nut to reduce the preload.

18. RECHECK RING GEAR BACKLASH (See page SA–179)

19. RECHECK TOOTH CONTACT BETWEEN RING GEAR AND DRIVE PINION (See step 11.)

20. CHECK COMPANION FLANGE RUNOUT (See page SA–179)

21. STAKE DRIVE PINION NUT

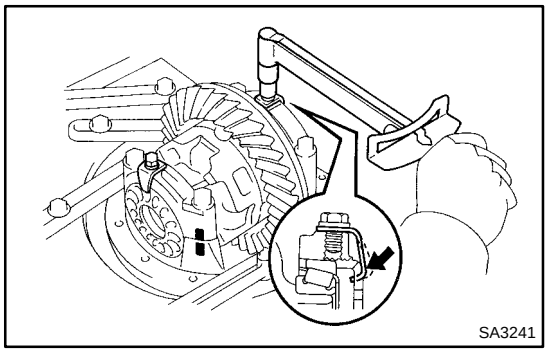

22. INSTALL ADJUSTING NUT LOCKS

(a) Install 2 new nut locks on the bearing caps.
Torque: 13 N·m (130 kgf·cm, 9 ft·lbf)

(b) After tightening bolts, bend the nut locks.

23. INSTALL SHIFT FORK SHAFT

(a) Apply MP grease onto the outer circuit of the fork shaft.

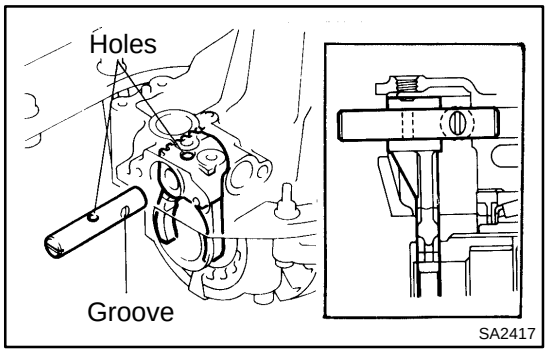

(b) Install the fork shaft to match the hole of the shift fork and that of the shift fork shaft.

(c) Remove any FIPG material and be careful not to drop oil on the contacting surface of the differential carrier and shaft retainer.

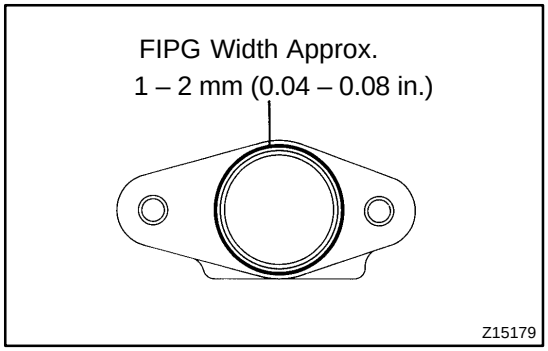

(d) Apply FIPG to the carrier, as shown in the illustration.
FIPG:
Part No. 08826–00090, THREE BOND 1281 or equivalent

HINT:
Install the shaft retainer within 10 minutes after applying FIPG.

(e) Clean the threads of the bolts and retainer bolts holes with toluene or trichlorethylene.

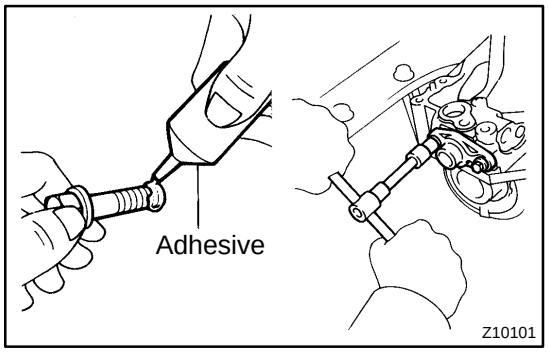

(f) Apply adhesive to 2 or 3 threads of the mount bolt end.
Adhesive:
Part No. 08833–00080, THREE BOND 1344, LOCTITE 242 or equivalent

(g) Tighten the shaft retainer with the 2 bolts.
Torque: 24 N·m (240 kgf·cm, 17 ft·lbf)

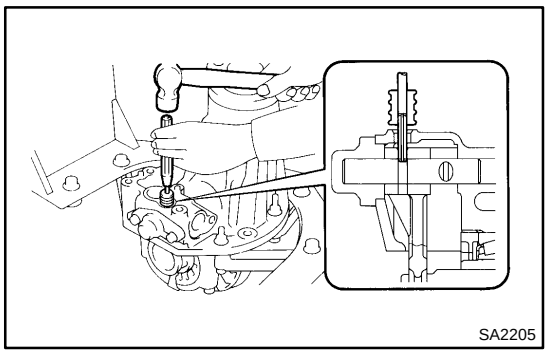

(h) Using a pin punch and hummer, install the slotted spring pin to the shift fork.

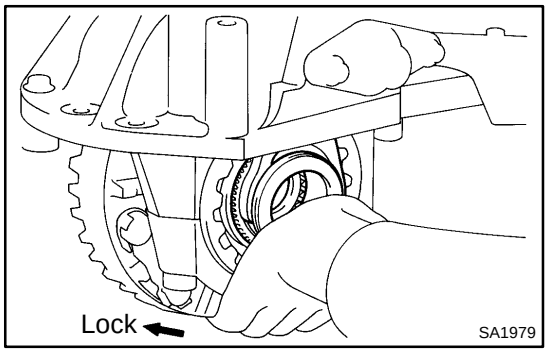

(i) Shift the fork deeply and keep the differential lock condition.

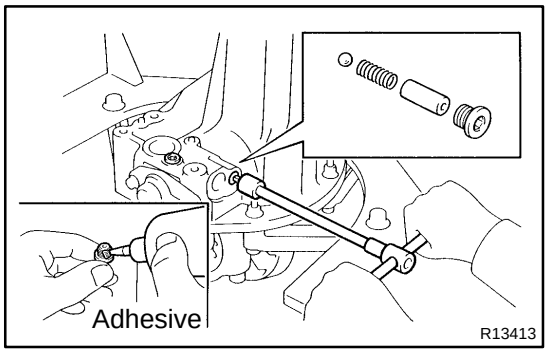

(j) Install the steel ball, spring and spring seat.
(k) Clean the threads of 2 plugs and plug holes with toluene or trichlorethylene.
(l) Apply adhesive to the plug threads.
Adhesive:
Part No. 08833–00080, THREE BOND 1344, LOCTITE 242 or equivalent
(m) Using a hexagon wrench, install and tighten the screw plugs.
Torque: 22 N·m (220 kgf·cm, 16 ft·lbf)

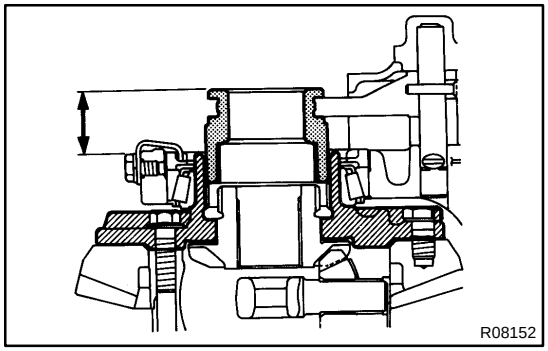

24. MEASURE DISTANCE BETWEEN SLEEVE AND DIFFERENTIAL CASE END SIDE

Measure distance between the sleeve and tip of the differential case when differential is free and locked respectively.

Standard distance:
Lock: 17.44 – 18.86 mm (0.6866 – 0.7425 in.)
Free: 32.40 – 33.90 mm (1.2756 – 1.3346 in.)

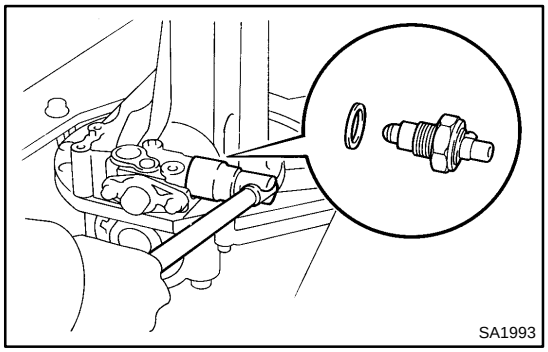

25. INSTALL DIFF. LOCK INDICATOR SWITCH

Install the indicator switch with a new gasket.

Torque: 40 N·m (410 kgf·cm, 30 ft·lbf)

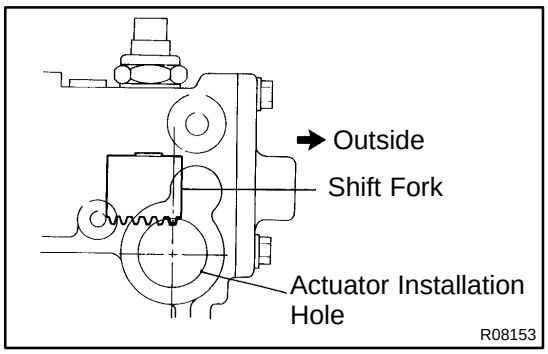

26. INSTALL ACTUATOR

(a) Check that the outermost rack tooth of the shift fork is virtually above the center line of the actuator installation hole.

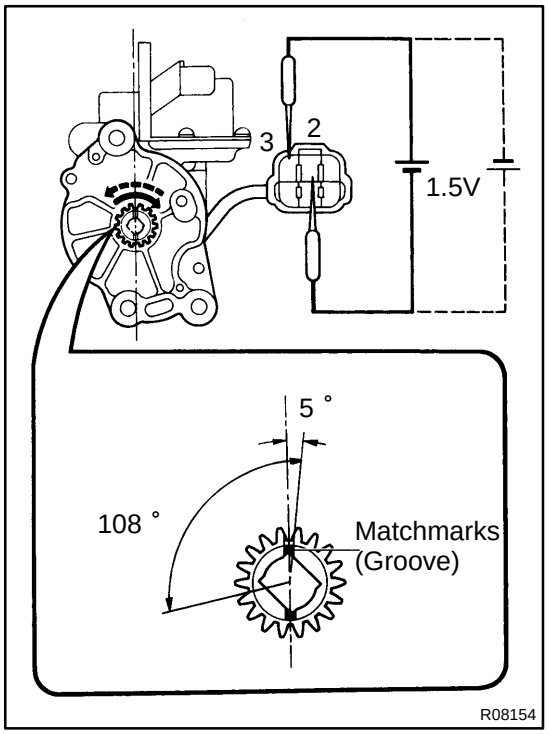

(b) Ensure that the matchmarks on the pinion of the actuator is in the extent between zero and 5 degrees clockwise above the center line of the actuator.

NOTICE:

- **If the matchmarks are not in this extent, rotate the pinion to be matched.**
- **Don't supply the battery positive voltage directly between terminals.**
- **If the matchmarks come to the extension limit of the rotation, don't electrify moreover.**

(c) Install a new O–ring to the actuator.

(d) Apply a light coat of gear oil to the O–ring.

(e) Apply MP grease to the gear part.

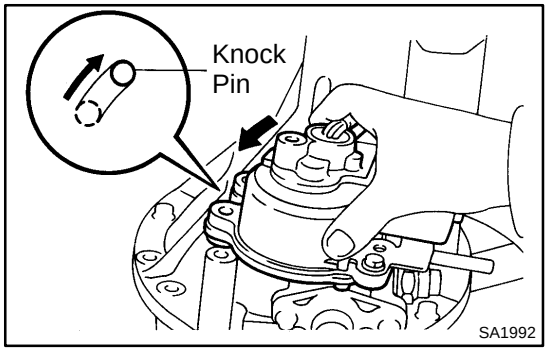

(f) Insert the actuator so that the long hole on the actuator side fits with the knock pin on the carrier side.

HINT:

Do not damage the O–ring of the actuator.

(g) Align the actuator with the long hole and rotate the actuator counterclockwise when the knock pin reaches the right–hand side.

(h) Install the actuator to the differential carrier with the bolt so that the outermost rack tooth of the shift fork will fit the matchmarks on the pinion of the actuator.

Torque: 26 N·m (270 kgf·cm, 20 ft·lbf)

SA09U–03

REMOVAL

1. SHIFTING DIFF. LOCK POSITION

(a) Turn the ignition switch to ON position.

(b) Push the differential lock control switch to ON position and lock the rear differential.

Rotating the tires, check they are in the differential lock condition.

(c) Disconnect the cable from the negative terminal of the battery.

HINT:

At the time of installation, after installation, check that the breather plug at the end of the breather tube (inside of the LH frame) is not damaged or worn.

2. DRAIN HYPOID GEAR OIL

3. REMOVE REAR AXLE SHAFTS (See page SA–129)

4. DISCONNECT REAR PROPELLER SHAFT

2WD: See page PR–3

4WD: See page PR–11

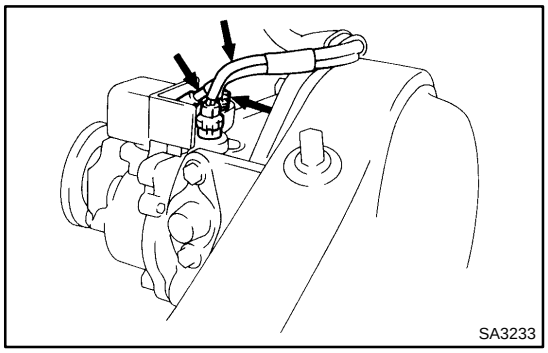
SA3233

5. DISCONNECT CONNECTORS AND TUBE

HINT:

At the time of installation, please refer to the following items.

- When connecting the tube of the harness side to the hose of the actuator side, its depth of insertion is 15 mm (0.59 in.).
- Take care that water or equivalent dose not adhere to the connector and hose.

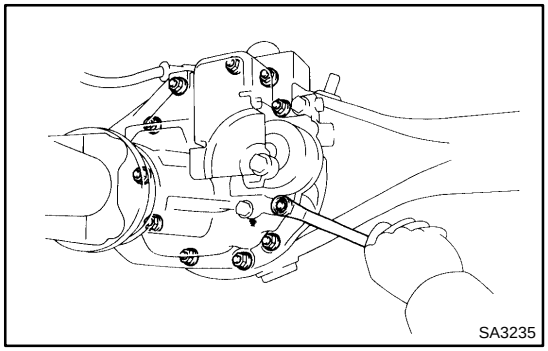
SA3235

6. REMOVE DIFFERENTIAL CARRIER ASSEMBLY

(a) Remove the 10 nuts, washers and differential carrier assembly.

NOTICE:

Be careful not to damage the installation surface.

Torque: 25 N·m (250 kgf·cm, 18 ft·lbf)

(b) Remove the gasket.

HINT:

At the time of installation, please refer to the following items.

- Connect the connector of the actuator to the connector of the vehicle side to check differential lock operation.
- Before installation, check the sleeves on work with switching over the differential lock control switch. After checking, lock the rear differential.

SA09W–03

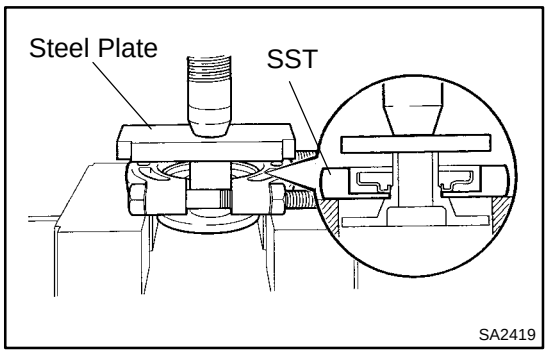

REPLACEMENT

REPLACE COMPANION FLANGE DUST DEFLECTOR

(a) Using SST, a steel plate and a press, remove the dust deflector.
SST 09950–00020

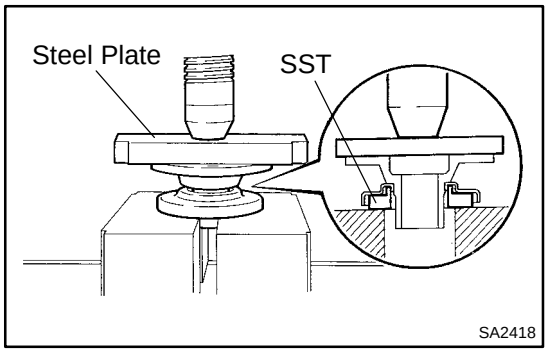

(b) Using SST, a steel plate and a press, install a new dust deflector.
SST 09726–40010

REAR DIFFERENTIAL CARRIER (3RZ–FE, 5VZ–FE w/o Diff. Lock)

SA0BN–04

COMPONENTS

HINT:

Pre runner is the model described below.

RZN191L–TRPDKAB, RZN196L–CRPDKAB, PZN196L–PRPDKAB, VZN195L–CRPDKAB, VZN195L–PRPDKAB

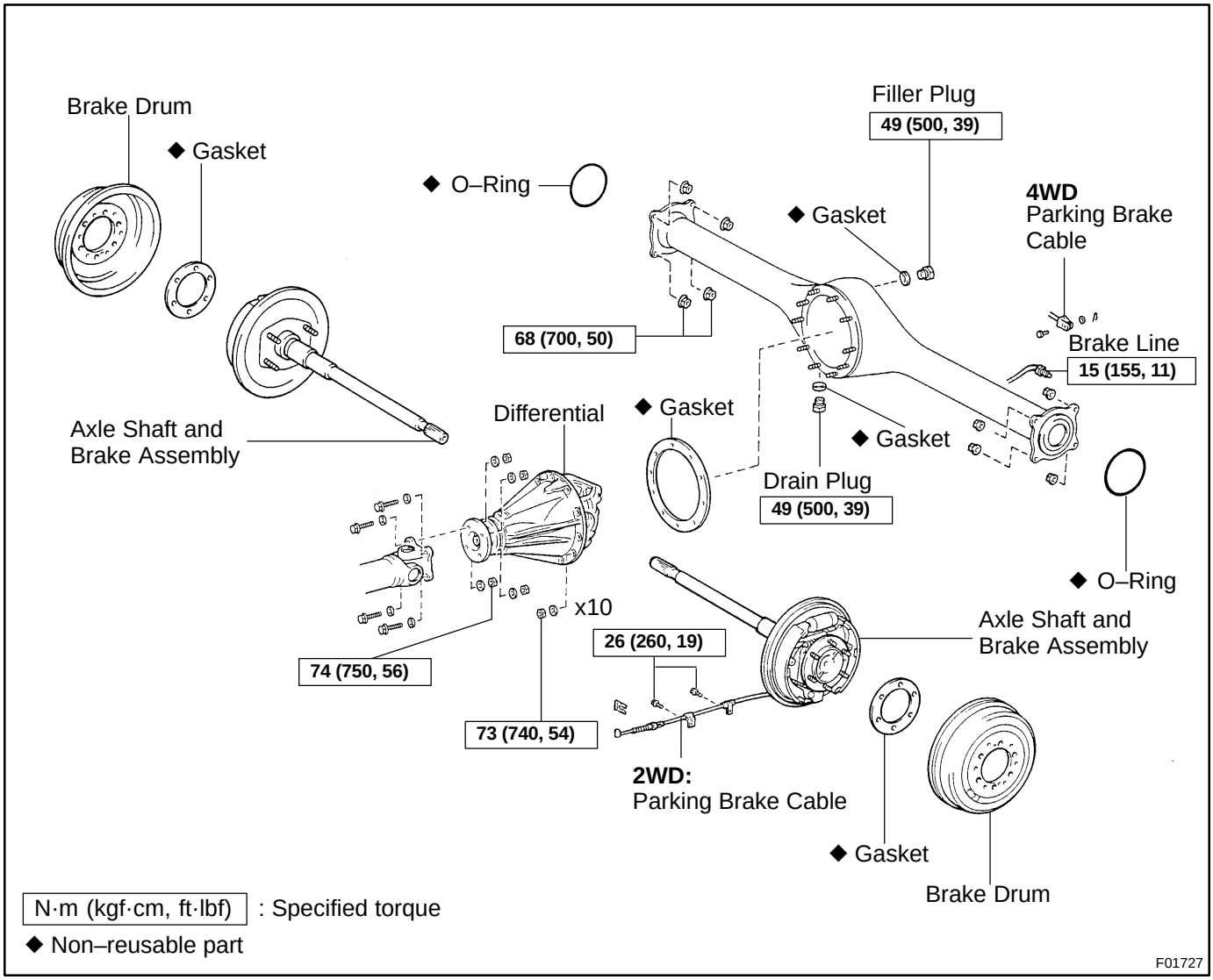

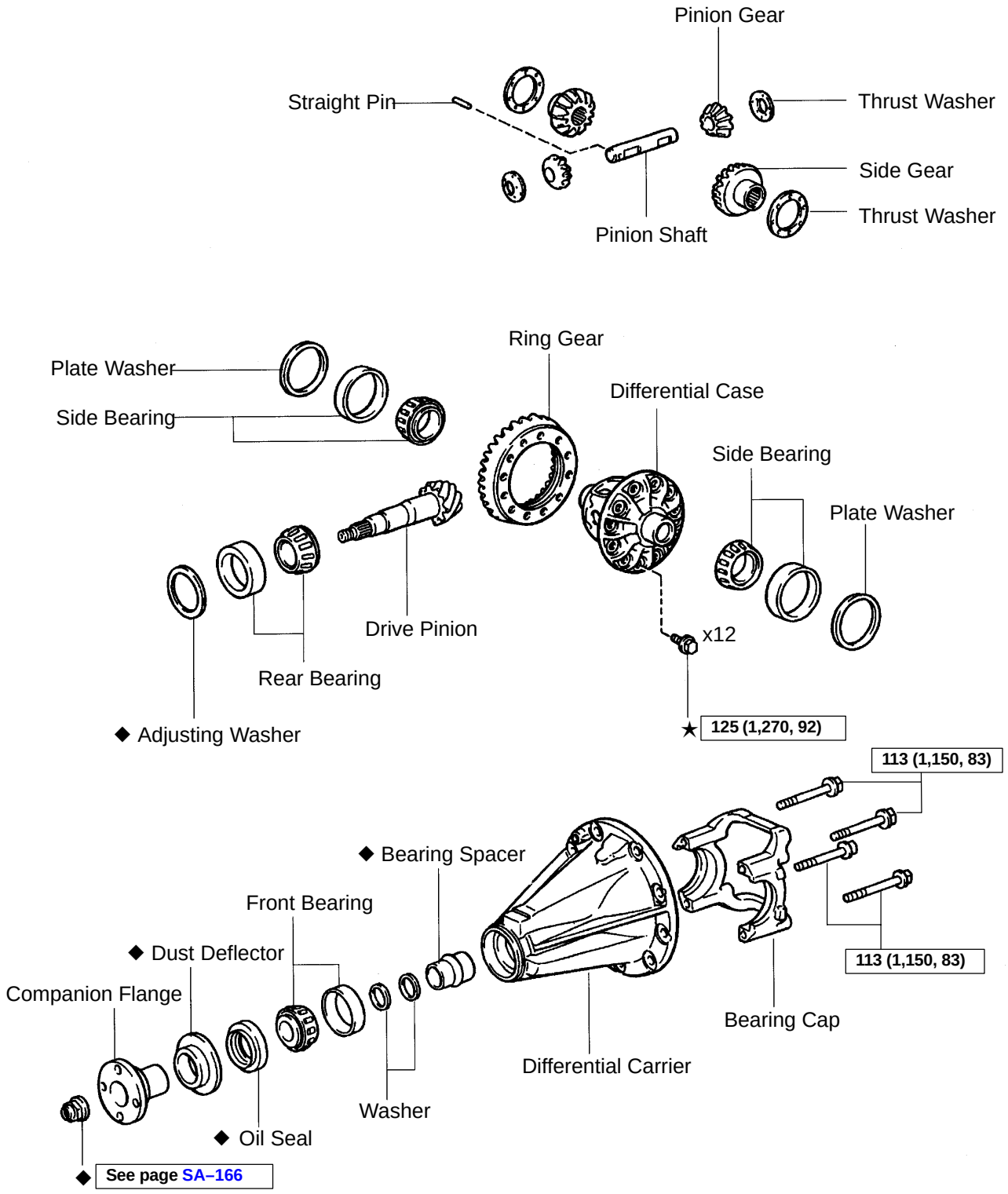

N·m (kgf·cm, ft·lbf) : Specified torque
◆ Non–reusable part
★ Precoated part

Z19299

SA0BP–09

DISASSEMBLY

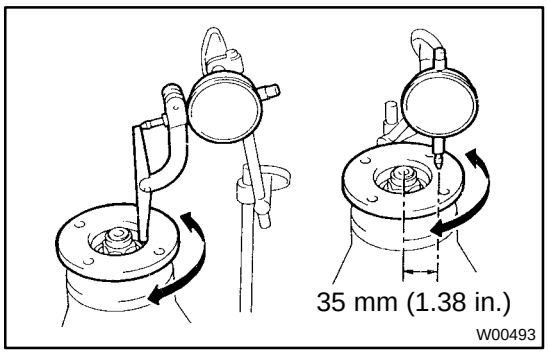

1. CHECK COMPANION FLANGE RUNOUT

Using a dial indicator, measure the vertical and lateral runout of the companion flange.

Maximum: runout: 0.09 mm (0.0035 in.)

If the runout exceeds the maximum, replace the companion flange.

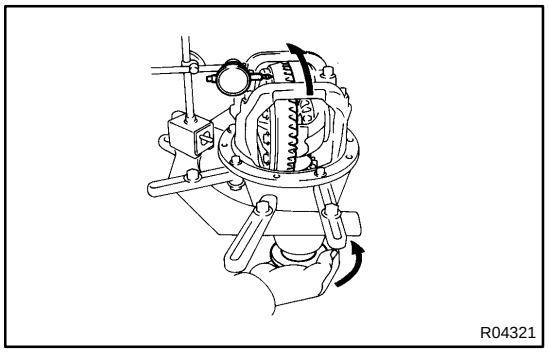

2. CHECK RING GEAR RUNOUT

Using a dial indicator, measure the ring gear runout.

Maximum runout: 0.05 mm (0.0020 in.)

If the runout exceeds the maximum, replace the ring gear.

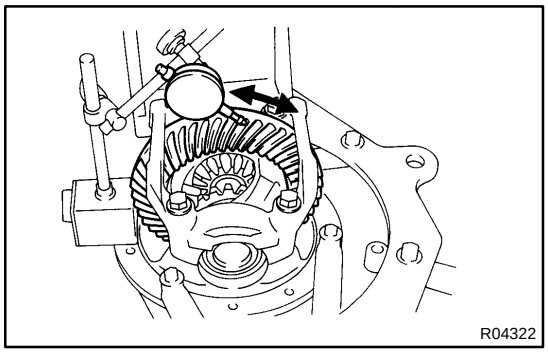

3. CHECK RING GEAR BACKLASH

Using a dial indicator, while holding the companion flange, measure the ring gear backlash.

Backlash: 0.13 – 0.18 mm (0.0051 – 0.0071 in.)

HINT:

Measure at 3 or more positions around the circumference of the ring gear.

If the backlash is not within the specified value, adjust the side bearing preload or as necessary.

4. CHECK TOOTH CONTACT BETWEEN RING GEAR AND DRIVE PINION (See page SA–166)

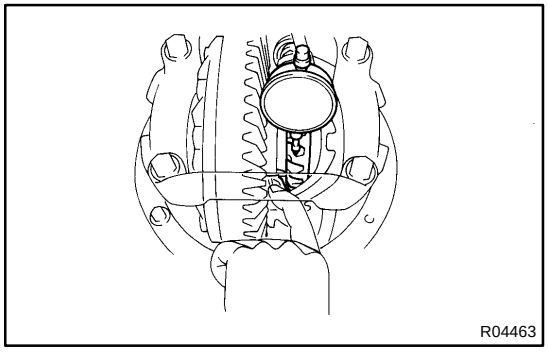

5. CHECK SIDE GEAR BACKLASH

Using a dial indicator, measure the side gear backlash with holding one pinion gear toward the case.

Backlash: 0.05 – 0.20 mm (0.0020 – 0.0079 in.)

If the backlash is not within the specified value, replace the side gear thrust washer of the different thickness (See page SA–166).

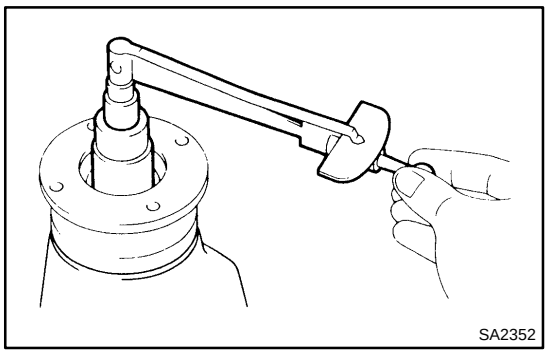

6. MEASURE DRIVE PINION PRELOAD

Using a torque wrench, measure the preload of the drive pinion using the backlash between the drive pinion and ring gear.

Preload (at starting):
0.6 – 0.9 N·m (7 – 10 kgf·cm, 5.7 – 8.3 in.·lbf)

7. CHECK TOTAL PRELOAD

Using a torque wrench, measure the total preload with the teeth of the drive pinion and ring gear in contact.

Total preload (at starting):
Drive pinion preload plus 0.4 – 0.6 N·m (4 – 6 kgf·cm, 3.5 – 5.2 in.·lbf)

If necessary, disassemble and inspect the differential.

8. REMOVE COMPANION FLANGE

(a) Using a chisel and hammer, unstake the staked part of the nut.

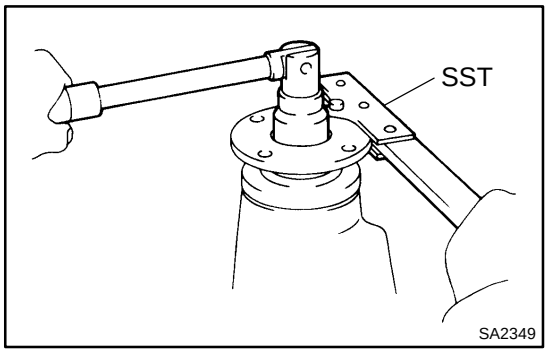

(b) Using SST to hold the flange, remove the nut.
SST 09330–00021

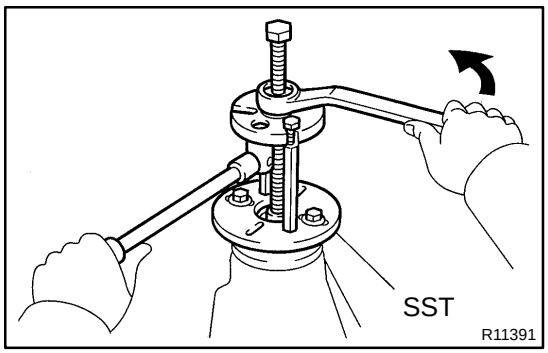

(c) Using SST, remove the companion flange.
SST 09950–30012 (09951–03010, 09953–03010, 09954–03010, 09955–03030, 09956–03050)

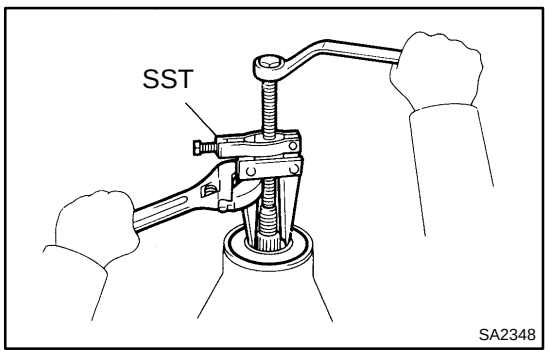

9. REMOVE FRONT OIL SEAL

Using SST, remove the oil seal from the differential carrier.
SST 09350–32014 (09308–10010)

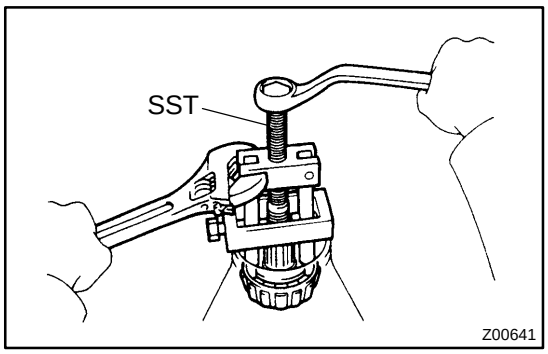

10. REMOVE FRONT BEARING AND BEARING SPACER

(a) Using SST, remove the bearing from the drive pinion.

SST 09556–22010

If the front bearing is damage or worn, replace the front bearing.

(b) Remove the 2 washers and bearing spacer.

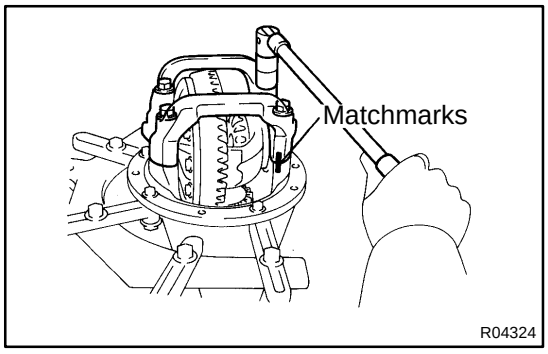

11. REMOVE DIFFERENTIAL CASE

(a) Place matchmarks on the bearing cap and differential carrier.

(b) Remove the 4 bolts and bearing cap.

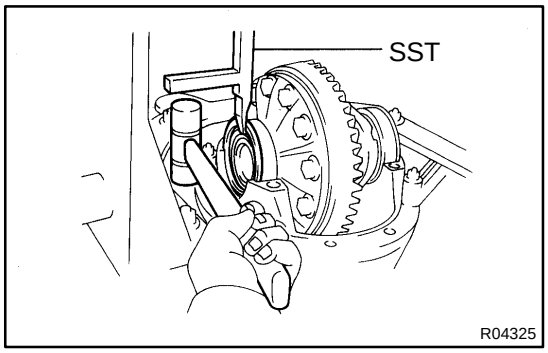

(c) Using SST and a plastic hammer, remove the 2 side bearing plate washers.

SST 09504–22012

HINT:

Measure the plate washer and note down the thickness.

(d) Remove the differential case with the bearing outer race from the carrier.

HINT:

Tag the bearing outer races to show the location for reassembling.

12. REMOVE DRIVE PINION FROM DIFFERENTIAL CARRIER

Remove the drive pinion with the rear bearing.

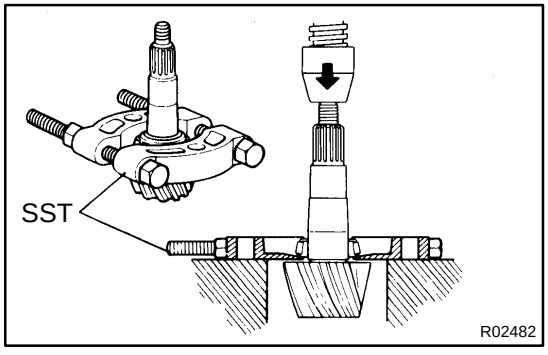

13. REMOVE DRIVE PINION REAR BEARING

Using SST and a press, remove the bearing from the drive pinion.

SST 09950–00020

HINT:

If the drive pinion or ring gear is damaged, replace them as a set.

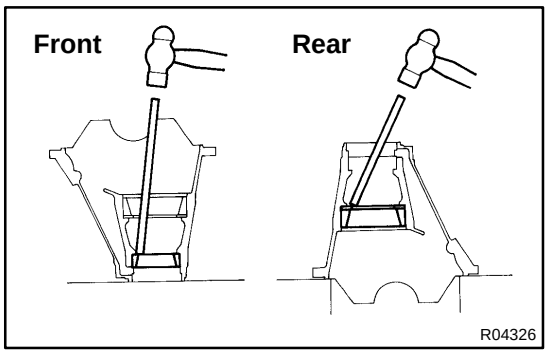

14. REMOVE FRONT AND REAR BEARING OUTER RACES AND ADJUSTING WASHER

NOTICE:

Do not remove the outer races except when replacing the bearings.

Using a brass bar and hammer, remove the outer races and adjusting washer from the carrier.

HINT:

Measure the adjusting washer and note down the thickness.

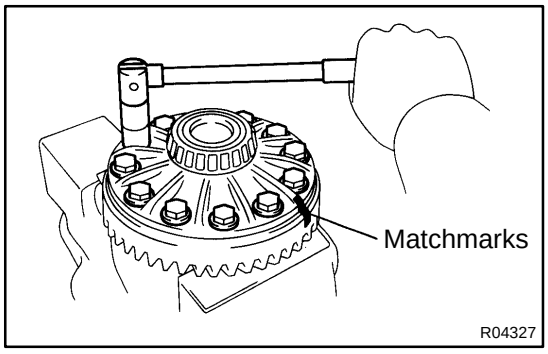

15. REMOVE RING GEAR

(a) Place matchmarks on the ring gear and differential case.

(b) Remove the 12 ring gear set bolts.

(c) Using a plastic hammer, tap on the ring gear to separate it from the differential case.

16. CHECK DIFFERENTIAL CASE RUNOUT

(a) Install the differential case in the differential carrier (See page SA–166).

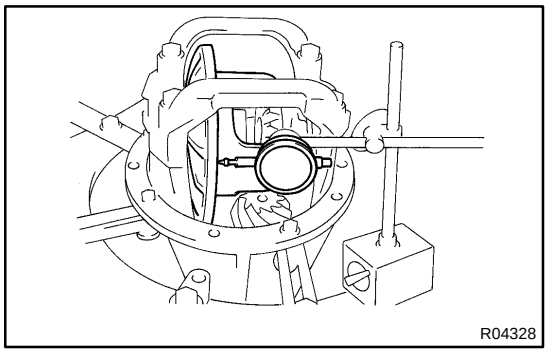

(b) Using a dial indicator, measure the differential case runout.

Maximum case runout: 0.04 mm (0.0016 in.)

(c) Remove the differential case.

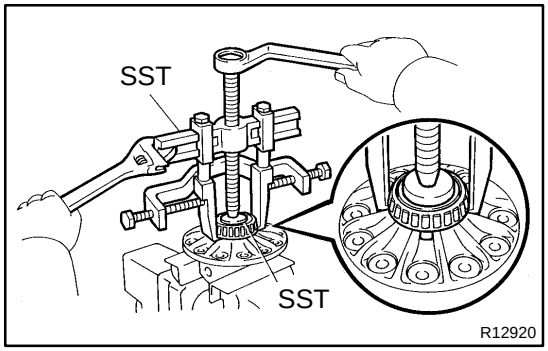

17. REMOVE SIDE BEARINGS

Using SST, remove the 2 side bearings from the differential case.

SST 09950–40011 (09951–04010, 09952–04010, 09953–04020, 09954–04010, 09955–04061, 09957–04010, 09958–04011), 09950–60010 (09951–00480)

HINT:

Fix the claws of SST to the notch in the differential case.

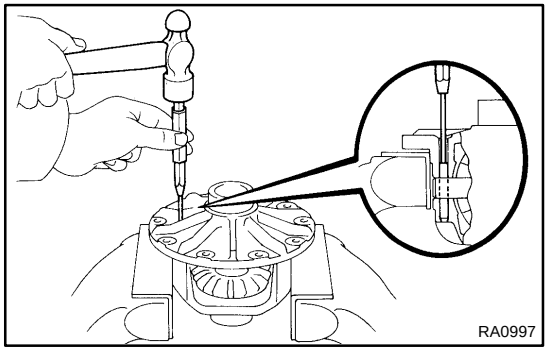

18. DISASSEMBLE DIFFERENTIAL CASE ASSEMBLY

(a) Using a pin punch and hammer, remove the straight pin.

(b) Remove the pinion shaft, 2 pinion gears, pinion gear thrust washers, side gears and side gear thrust washers from the differential case.

SA0BS–02

INSTALLATION

Installation is in the reverse order of removal (See page SA–160).

HINT:

After installation, fill the differential with hypoid gear oil (See page SA–137).

SA1GD–06

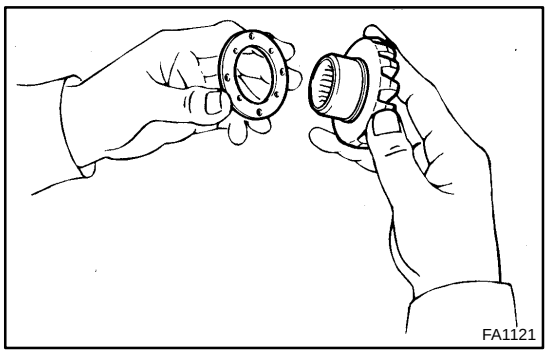

REASSEMBLY

1. ASSEMBLE DIFFERENTIAL CASE

(a) Install the 2 thrust washer to the side gears.

HINT:

Refer to the table below to select thrust washers which will ensure that the backlash is within the specifications.

Washer thickness:

Thickness mm (in.)	Thickness mm (in.)
1.50 (0.0590)	1.75 (0.0689)
1.55 (0.0610)	1.80 (0.0709)
1.60 (0.0630)	1.85 (0.0728)
1.65 (0.0650)	1.90 (0.0748)
1.70 (0.0669)	–

(b) Install the 2 side gears with the thrust washers, 2 pinion gears, 2 pinion gear thrust washers and pinion shaft.

HINT:

Align the holes of the differential case and pinion shaft.

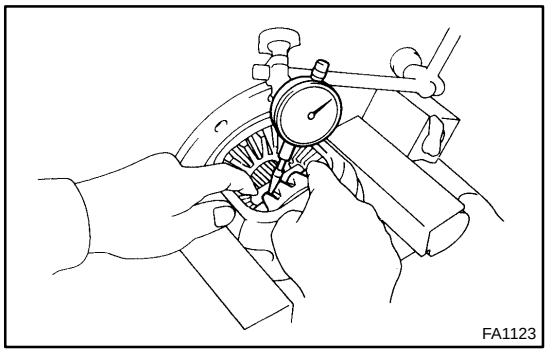

(c) Using a dial indicator, measure the side gear backlash with holding one pinion gear toward the differential case.

Backlash: 0.05 – 0.20 mm (0.0020 – 0.0079 in.)

If the backlash is not within the specified value, select an appropriate thickness for the side gear thrust washer.

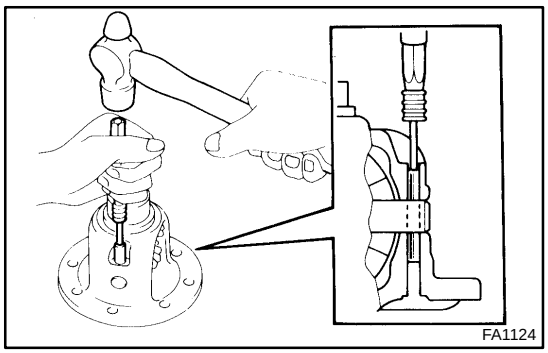

(d) Using a pin punch and hammer, install the straight pin through the holes in the differential case and pinion shaft.

(e) Using a chisel and hammer, stake the out side of the differential case pin hole.

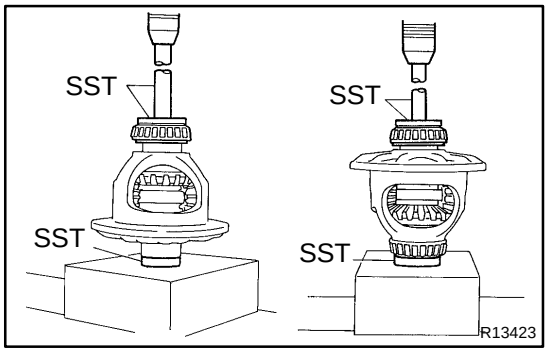

2. INSTALL SIDE BEARINGS

Using SST and a press, install the 2 side bearings into the differential case.

SST 09950–60010 (09951–00480, 09951–00640) 09950–70010 (09951–07150)

3. INSTALL RING GEAR ON DIFFERENTIAL CASE

(a) Clean the contact surfaces of the differential case and ring gear.

(b) Heat the ring gear to about 100˚C (212˚F) in boiling water.

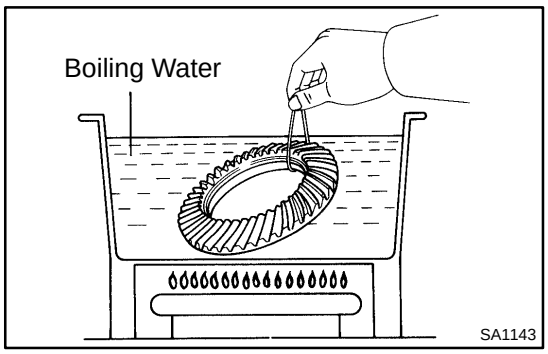

(c) Carefully take the ring gear out of the boiling water.

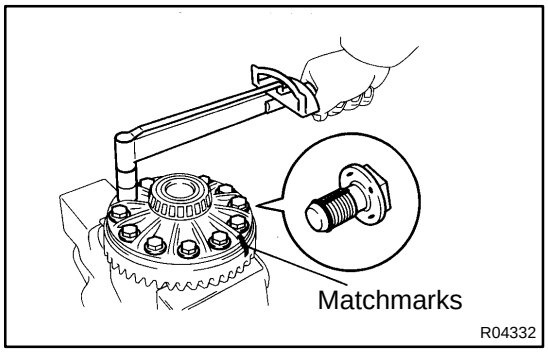

(d) After the moisture on the ring gear has completely evaporated, quickly install the ring gear to the differential case.

HINT:

Align the matchmarks on the ring gear and differential case.

(e) After the ring gear cools down enough, torque the set bolts to which thread lock has been applied.

Thread lock:

Part No. 08833–00100, THREE BOND 1360K or equivalent.

Torque: 125 N·m (1,270 kgf·cm, 92 ft·lbf)

4. INSPECT RING GEAR RUNOUT

(a) Install the differential case into the carrier and install the plate washers to where there is no play in the bearing (See step 8.).

(b) Install the bearing cap (See step 11.).

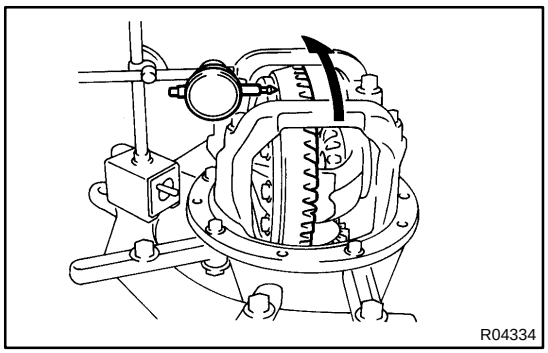

(c) Using a dial indicator, measure the runout of ring gear.

(d) Remove the bearing caps and differential case.

Maximum runout: 0.05 mm (0.0020 in.)

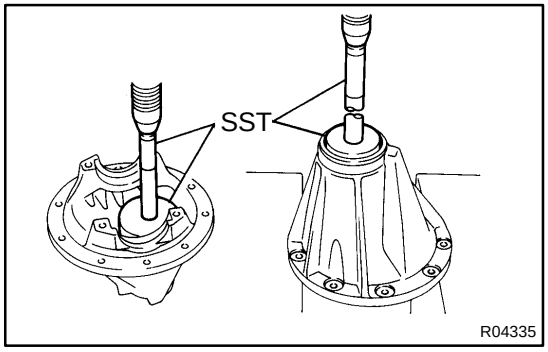

5. INSTALL DRIVE PINION BEARING OUTER RACES AND ADJUSTING WASHER

(a) Using SST and a press, install a new front bearing outer race to the carrier.

SST 09950–60020 (09951–00710),
09950–70010 (09951–07150)

(b) Using SST and a press, install a new adjusting washer and a new rear bearing outer race to the carrier.

SST 09950–60020 (09951–00910),
09950–70010 (09951–07150)

HINT:
First fit a washer with the same thickness as the washer which was removed, then after checking the tooth contact pattern, replace the washer with one of a different thickness if necessary.

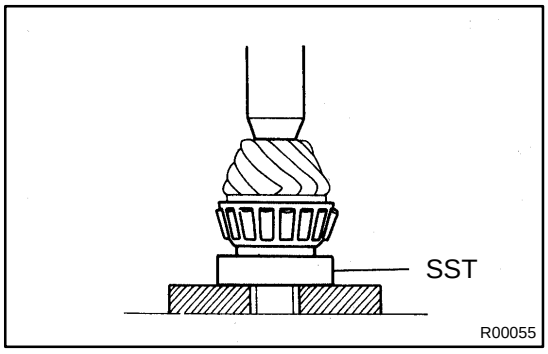

6. INSTALL DRIVE PINION REAR BEARING

Using SST and a press, install the rear bearing onto the drive pinion.

SST 09506–35010

7. TEMPORARILY ADJUST DRIVE PINION PRELOAD

(a) Install the drive pinion and front bearing.

HINT:
Assemble the spacer, washers and oil seal after adjusting the gear contact pattern.

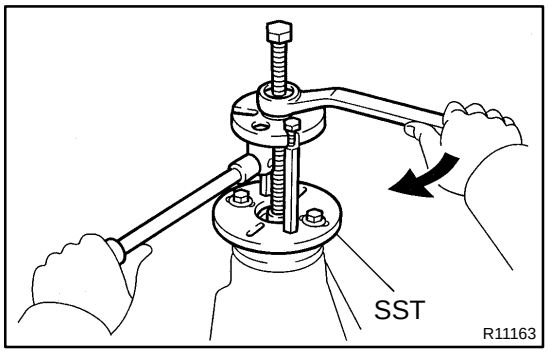

(b) Using SST, install the companion flange.
SST 09950–30012 (09951–03010, 09953–03010, 09954–03010, 09955–03030, 09956–03050)

(c) Coat the threads of the nut with hypoid gear oil.

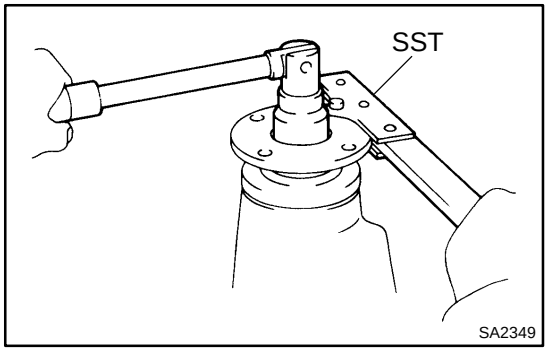

(d) Adjust the drive pinion preload by tightening the companion flange nut.

HINT:
Using SST to hold the flange, torque the nut.
SST 09330–00021

NOTICE:
As there is no spacer, tighten the nut a little at a time, being careful not to overtighten it.

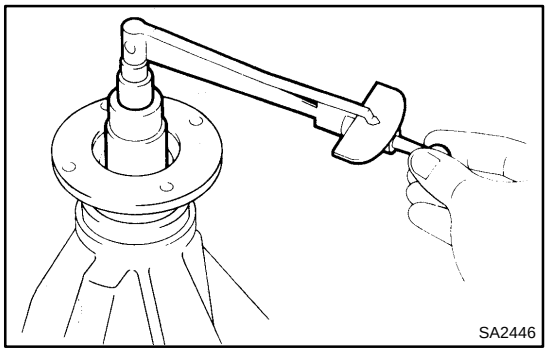

(e) Using a torque wrench, measure the preload of the drive pinion using the backlash between the drive pinion and ring gear.
Preload (at starting):
New bearing
1.1 – 1.7 N·m (12 – 18 kgf·cm, 10.0 – 15.2 in.·lbf)
Reused bearing
0.6 – 0.9 N·m (7 – 10 kgf·cm, 5.7 – 8.3 in.·lbf)

8. INSTALL DIFFERENTIAL CASE IN CARRIER

(a) Place the 2 bearing outer races on their respective bearings. Make sure the right and left races are not interchanged.

(b) Install the differential case in the carrier.

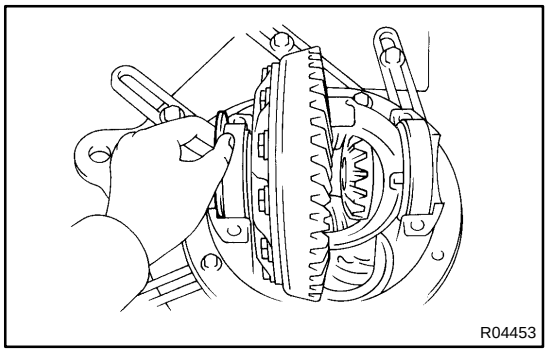

9. ADJUST RING GEAR BACKLASH

(a) Only install the plate washer on the ring gear back side.

HINT:

Make sure that the ring gear has a backlash.

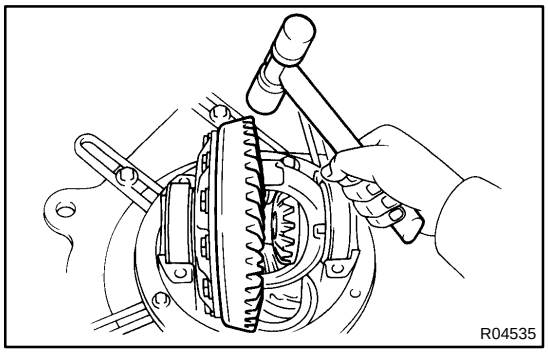

(b) Using a plastic hammer, snug down the plate washer and bearing by tapping the ring gear.

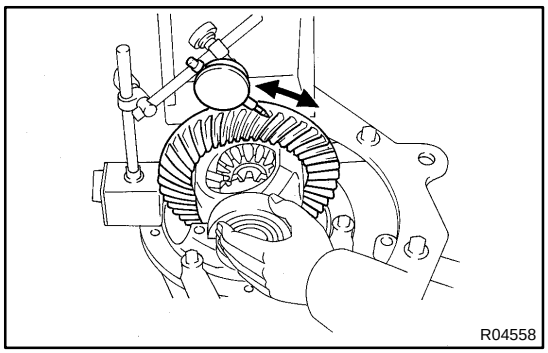

(c) Using a dial indicator, hold the side bearing boss on the teeth surface of the ring gear and measure the backlash.

Backlash (reference):
0.13 – 0.18 mm (0.0051 – 0.0071 in.)

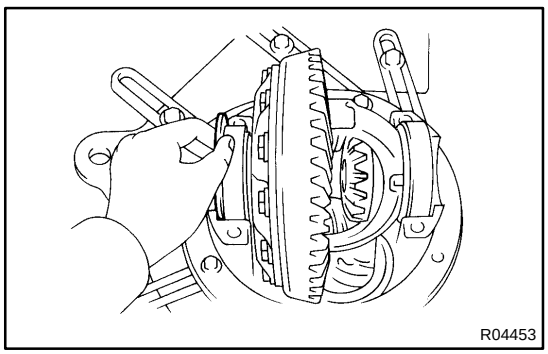

(d) Select a plate washer for back side ring gear using the backlash as reference (See page SA–166).

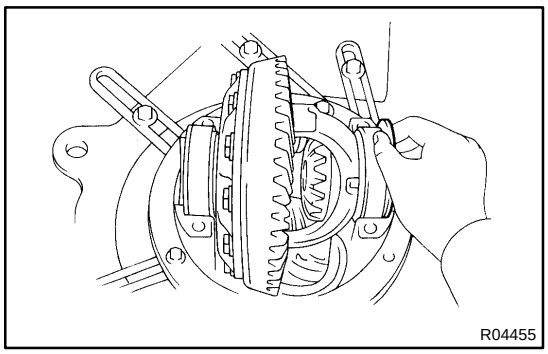
R04455

(e) Select a ring gear teeth side plate washer of a thickness which eliminates any clearance between the outer race and case.
(f) Remove the 2 plate washers and differential case.
(g) Install the plate washer into the ring gear back side of the carrier.

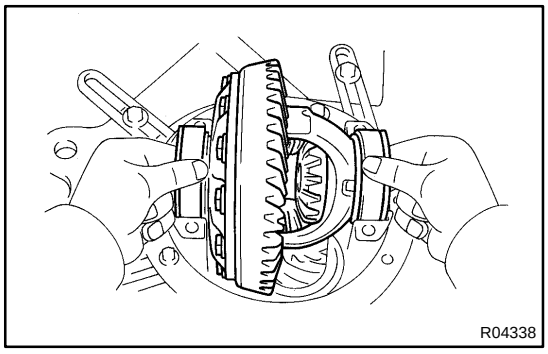
R04338

(h) Place the other plate washer onto the differential case together with the outer race, and install the differential case with the outer race into the carrier.
(i) Using a plastic hammer, snug down the washer and bearing by tapping the ring gear.

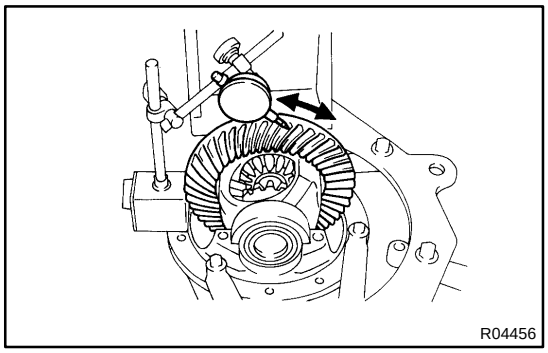
R04456

(j) Using a dial indicator, measure the ring gear backlash.
Backlash: 0.13 – 0.18 mm (0.0051 – 0.0071 in.)
(k) If the backlash is not within the specified value, adjust by either increasing or decreasing the thickness of washers on both sides by an equal amount.

HINT:
There should be no clearance between the plate washer and the case.
Make sure that there is a ring gear backlash.

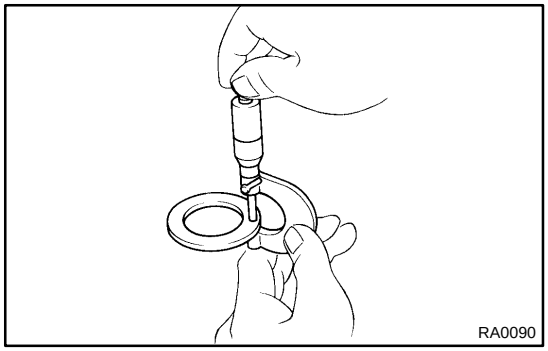
RA0090

10. ADJUST SIDE BEARING PRELOAD
(a) After adjustment with the backlash as reference, remove the ring gear teeth side plate washer and measure the thickness.
(b) Install a new washer of 0.06 – 0.09 mm (0.0024 – 0.0035 in.) thicker than the washer which was removed.

HINT:
Select a washer which can be pressed in 2/3 of the way by finger.

(c) Using a plastic hammer, install the plate washer.
(d) Recheck the ring gear backlash.
Backlash: 0.13 – 0.18 mm (0.0051 – 0.0071 in.)
(e) If the backlash is not within the specification, adjust by either increasing or decreasing the thickness of washers on both sides by equal amount.

HINT:
The backlash will change by about 0.20 mm (0.0079 in.) with every 0.03 mm (0.0012 in.) change in the side washer.

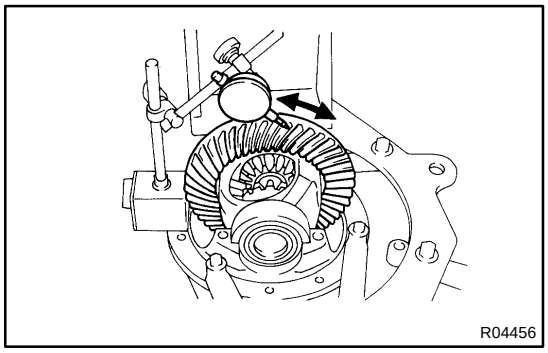
R04456

Washer thickness:

Mark	Thickness mm (in.)	Mark	Thickness mm (in.)	Mark	Thickness mm (in.)
58	2.58 (0.1015)	90	2.90 (0.1142)	22	3.22 (0.1268)
60	2.60 (0.1024)	92	2.92 (0.1150)	24	3.24 (0.1276)
62	2.62 (0.1031)	94	2.94 (0.1157)	26	3.26 (0.1283)
64	2.64 (0.1039)	96	2.96 (0.1165)	28	3.28 (0.1291)
66	2.66 (0.1047)	98	2.98 (0.1173)	30	3.30 (0.1299)
68	2.68 (0.1055)	00	3.00 (0.1181)	32	3.32 (0.1307)
70	2.70 (0.1063)	02	3.02 (0.1189)	34	3.34 (0.1315)
72	2.72 (0.1071)	04	3.04 (0.1197)	36	3.36 (0.1323)
74	2.74 (0.1079)	06	3.06 (0.1205)	38	3.38 (0.1331)
76	2.76 (0.1087)	08	3.08 (0.1213)	40	3.40 (0.1339)
78	2.78 (0.1094)	10	3.10 (0.1220)	42	3.42 (0.1346)
80	2.80 (0.1102)	12	3.12 (0.1228)	44	3.44 (0.1354)
82	2.82 (0.1110)	14	3.14 (0.1236)	46	3.46 (0.1362)
84	2.84 (0.1118)	16	3.16 (0.1244)	48	3.48 (0.1370)
86	2.86 (0.1126)	18	3.18 (0.1252)	–	
88	2.88 (0.1134)	20	3.20 (0.1260)	–	

11. INSTALL SIDE BEARING CAP

(a) Align the matchmarks on the cap and carrier.

(b) Install and torque the 4 bolts.

Torque: 113 N·m (1,150 kgf·cm, 83 ft·lbf)

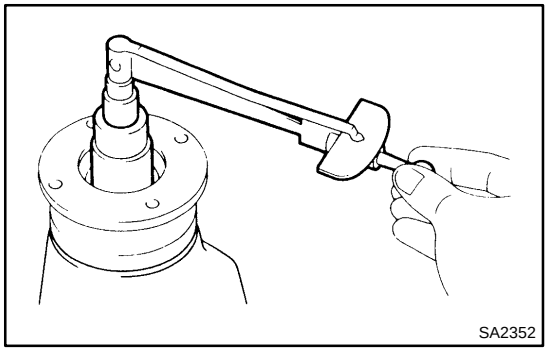

12. MEASURE TOTAL PRELOAD

Using a torque wrench, measure the total preload with the teeth of the drive pinion and ring gear in contact.

Total preload (at starting):

Drive pinion preload plus 0.4 – 0.6 N·m (4 – 6 kgf·cm, 3.5 – 5.2 in.·lbf)

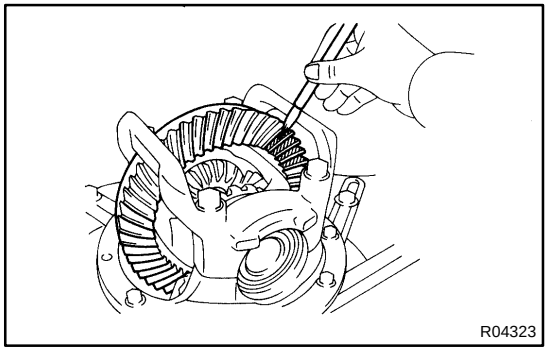

13. INSPECT TOOTH CONTACT BETWEEN RING GEAR AND DRIVE PINION

(a) Coat 3 or 4 teeth at three different positions on the ring gear with red lead primer.

(b) Hold the companion flange firmly and rotate the ring gear in both directions.

(c) Inspect the teeth pattern.

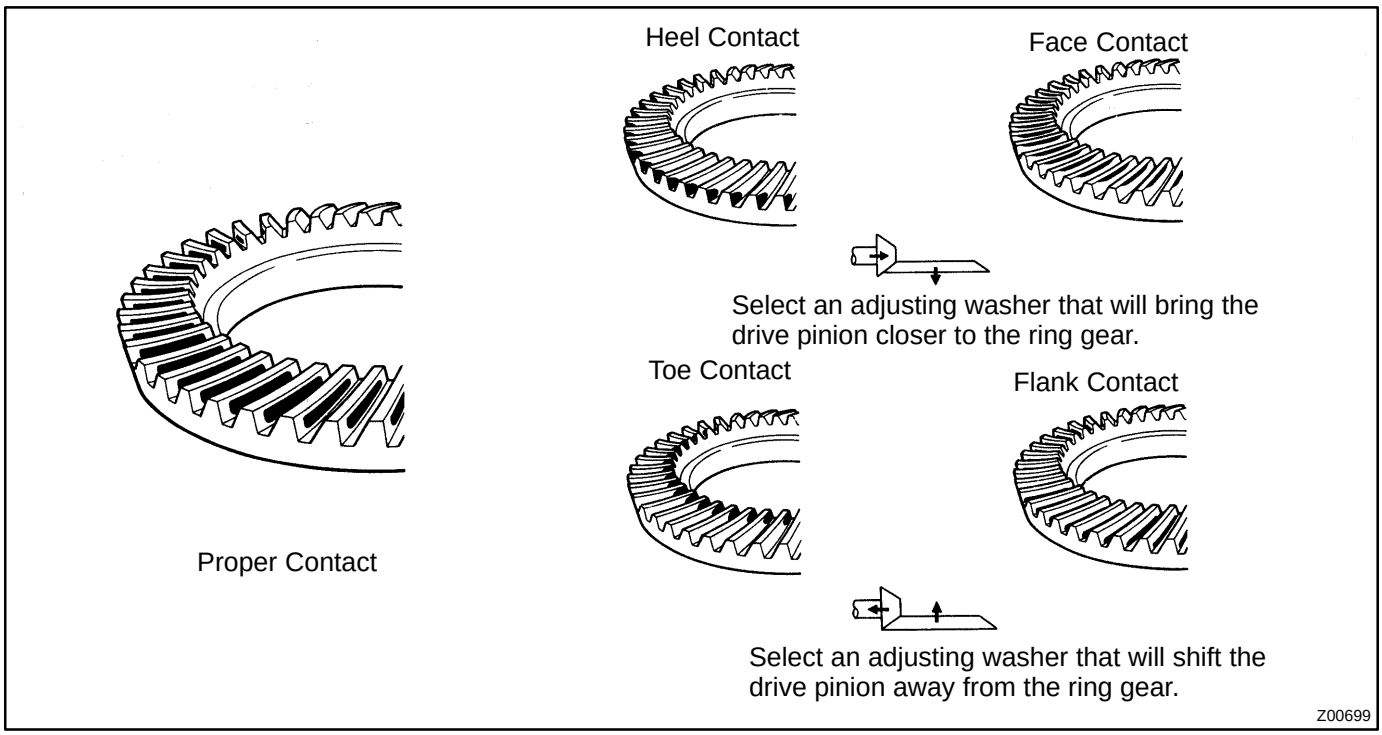

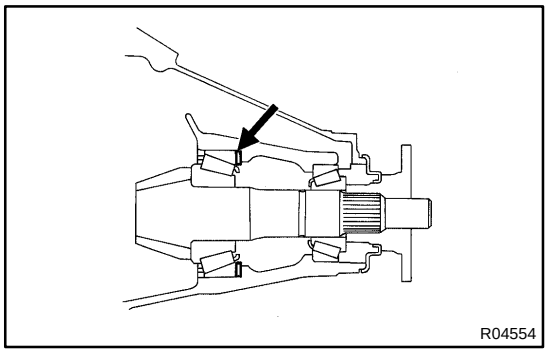

If the teeth are not contacting properly, use the following chart to select a proper washer for correction.

Washer thickness:

Mark	Thickness mm (in.)	Mark	Thickness mm (in.)	Mark	Thickness mm (in.)
87	1.87 (0.0736)	01	2.01 (0.0791)	15	2.15 (0.0846)
88	1.88 (0.0740)	02	2.02 (0.0795)	16	2.16 (0.0850)
89	1.89 (0.0744)	03	2.03 (0.0799)	17	2.17 (0.0854)
90	1.90 (0.0748)	04	2.04 (0.0803)	18	2.18 (0.0858)
91	1.91 (0.0752)	05	2.05 (0.0807)	19	2.19 (0.0862)
92	1.92 (0.0756)	06	2.06 (0.0811)	20	2.20 (0.0866)
93	1.93 (0.0760)	07	2.07 (0.0815)	21	2.21 (0.0870)
94	1.94 (0.0764)	08	2.08 (0.0819)	22	2.22 (0.0874)
95	1.95 (0.0768)	09	2.09 (0.0823)	23	2.23 (0.0878)
96	1.96 (0.0772)	10	2.10 (0.0827)	24	2.24 (0.0882)
97	1.97 (0.0776)	11	2.11 (0.0831)	25	2.25 (0.0886)
98	1.98 (0.0780)	12	2.12 (0.0835)	26	2.26 (0.0890)
99	1.99 (0.0783)	13	2.13 (0.0839)	27	2.27 (0.0894)
00	2.00 (0.0787)	14	2.14 (0.0843)	28	2.28 (0.0898)

14. REMOVE COMPANION FLANGE (See page SA–160)

15. REMOVE FRONT BEARING (See page SA–160)

16. INSTALL NEW BEARING SPACER, 2 WASHERS AND FRONT BEARING

(a) Install a new bearing spacer and 2 washers, and place the front bearing.

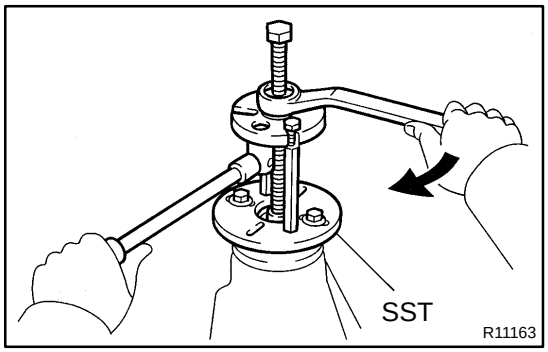

(b) Using SST and the companion flange, install the front bearing then remove the companion flange.

SST 09950–30012 (09951–03010, 09953–03010, 09954–03010, 09955–03030, 09956–03050)

17. INSTALL NEW OIL SEAL

(a) Coat a new oil seal lip with MP grease.

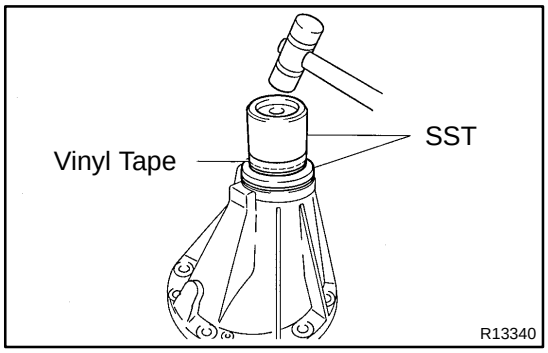

(b) Using SST and a plastic hammer, install the oil seal until its surface is flush with the differential carrier end.

SST 09316–12010, 09649–17010

HINT:

Connect SST with vinyl tape.

18. INSTALL COMPANION FLANGE

(a) Place the companion flange.

(b) Coat the threads of a new nut with hypoid gear oil.

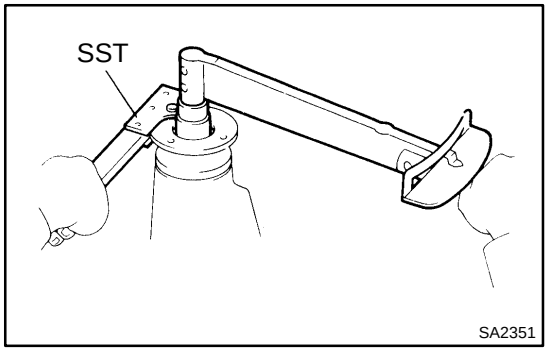

(c) Using SST to hold the flange, torque the nut.

SST 09330–00021

Torque: 147 N·m (1,500 kgf·cm, 109 ft·lbf)

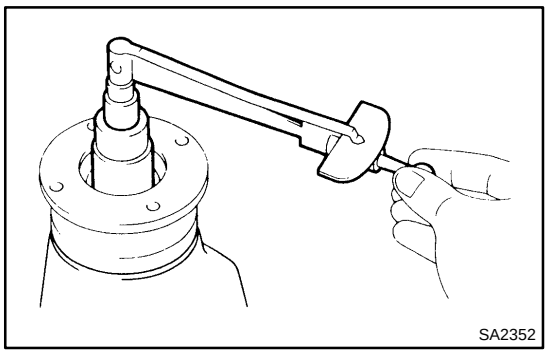

19. ADJUST DRIVE PINION PRELOAD

Using a torque wrench, measure the preload of the drive pinion using the backlash between the drive pinion and ring gear.

Preload (at starting):

New bearing

1.1 – 1.7 N·m (12 – 18 kgf·cm, 10.0 – 15.2 in.·lbf)

Reused bearing

0.6 – 0.9 N·m (7 – 10 kgf·cm, 5.7 – 8.3 in.·lbf)

If the preload is greater than the specified value, replace the bearing spacer.

If the preload is less than the specified value, retighten the nut 13 N·m (130 kgf·cm, 9 ft·lbf) a little at a time until the specified preload is reached.

Torque: 451 N·m (4,600 kgf·cm, 333 ft·lbf) or less

If the maximum torque is exceeded while retightening the nut, replace the bearing spacer and repeat the preload adjusting procedure. Do not loosen the pinion nut to reduce the preload.

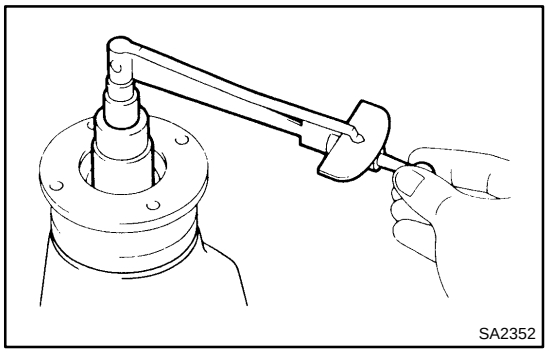

20. CHECK TOTAL PRELOAD

Using a torque wrench, measure the total preload with the teeth of the drive pinion and ring gear in contact.

Total preload (at starting):

Drive pinion preload plus 0.4 – 0.6 N·m (4 – 6 kgf·cm, 3.5 – 5.2 in.·lbf)

21. CHECK RING GEAR BACKLASH

Using a dial indicator, measure the ring gear backlash.

Backlash: 0.13 – 0.18 mm (0.0051 – 0.0071 in.)

22. RECHECK TOOTH CONTACT BETWEEN RING GEAR AND DRIVE PINION (See step 13.)

23. CHECK COMPANION FLANGE RUNOUT (See page SA–161)

24. STAKE DRIVE PINION NUT

SA0BO–02

REMOVAL

1. DRAIN HYPOID GEAR OIL

2. REMOVE REAR AXLE SHAFTS (See page SA–129)

3. DISCONNECT REAR PROPELLER SHAFT

2WD: See page PR–3

4WD and pre runner: See page PR–11

4. REMOVE DIFFERENTIAL CARRIER ASSEMBLY

(a) Remove the 10 nuts, washers and differential carrier assembly.

NOTICE:

Be careful not to damage the installation surface.

Torque: 73 N·m (740 kgf·cm, 54 ft·lbf)

(b) Remove the gasket.

SA0BQ–02

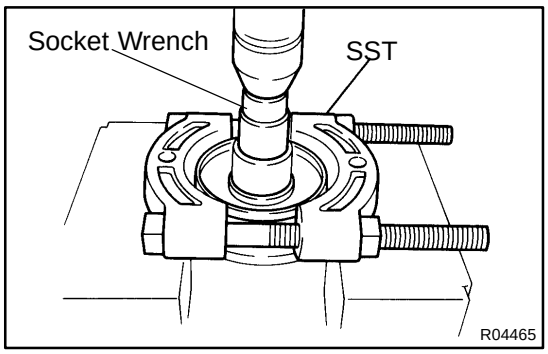

REPLACEMENT

REPLACE COMPANION FLANGE DUST DEFLECTOR

(a) Using SST, a socket wrench and a press, remove the dust deflector.
SST 09950–00020

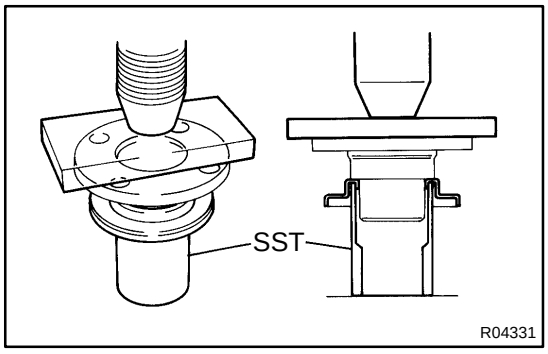

(b) Using SST and a press, install a new dust deflector.
SST 09523–36010

REAR DIFFERENTIAL FRONT OIL SEAL

SA0BD–05

COMPONENTS

HINT:
Pre runner is the model described below.
RZN191L–TRPDKAB, RZN196L–CRPDKAB, PZN196L–PRPDKAB, VZN195L–CRPDKAB, VZN195L–PRPDKAB

2RZ–FE,
3RZ–FE, 5VZ–FE w/ Diff. lock

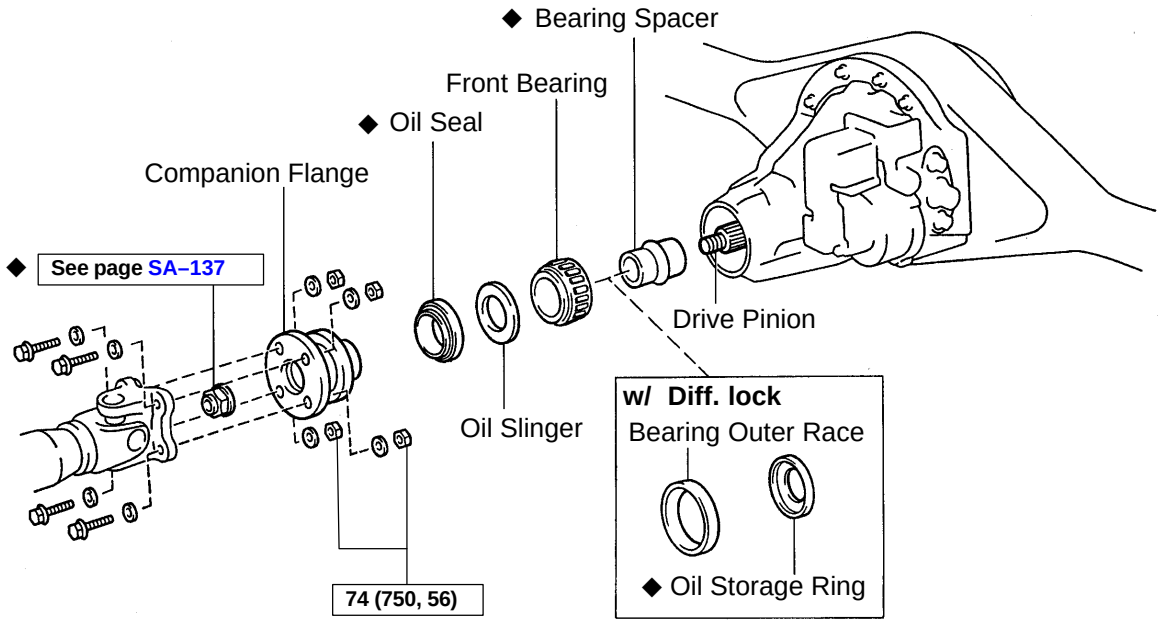

3RZ–FE, 5VZ–FE w/o Diff. lock

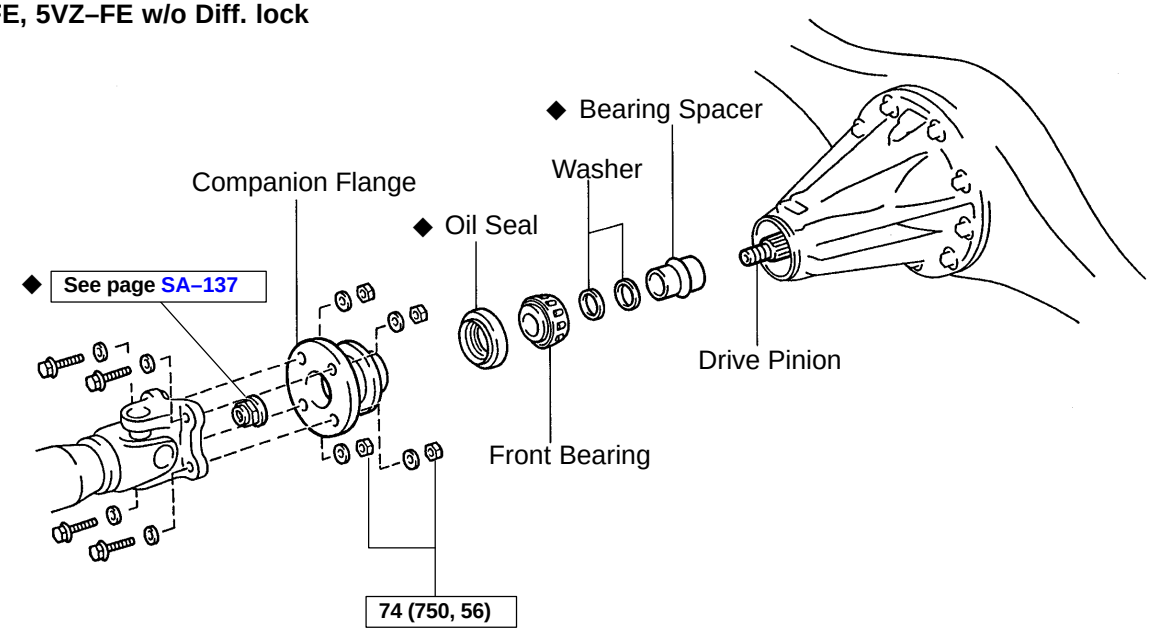

N·m (kgf·cm, ft·lbf) : Specified torque
◆ Non–reusable part

Z19300

SA0BE–06

REPLACEMENT

1. DRAIN DIFFERENTIAL OIL

2. DISCONNECT REAR PROPELLER SHAFT

2WD: See page PR–3

4WD and prerunner: See page PR–11

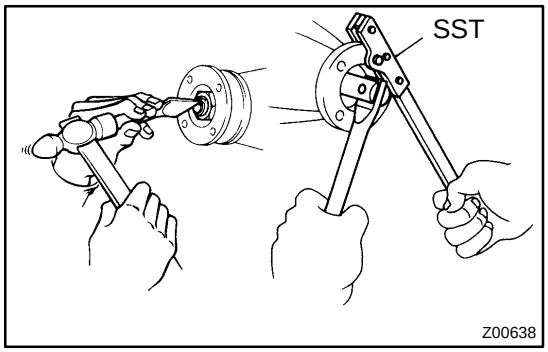

3. REMOVE COMPANION FLANGE

(a) Using a chisel and hammer, loosen the staked part of the nut.

(b) Using SST to hold the flange, remove the nut.

SST 09330–00021

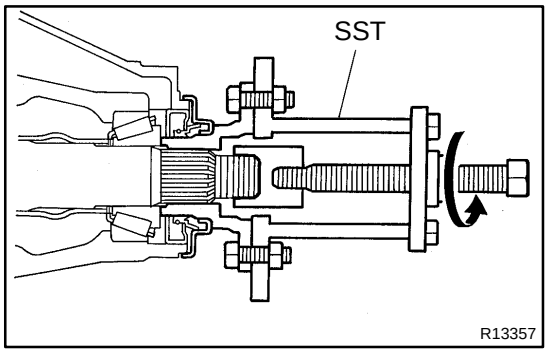

(c) Using SST, remove the companion flange.

SST 09950–30012 (09951–03010, 09953–03010, 09954–03010, 09955–03030, 09956–03020, 09956–03050)

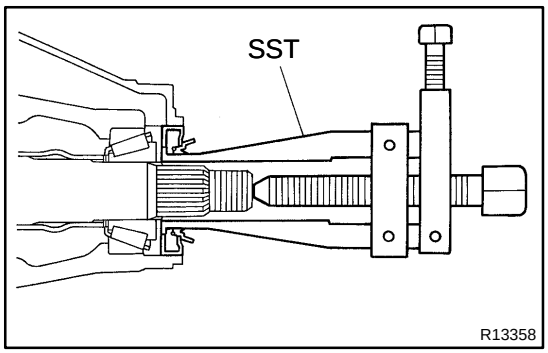

4. REMOVE OIL SEAL

Using SST, remove the oil seal.

SST 09350–32014 (09308–10010)

5. Except 3RZ–FE, 5VZ–FE w/o Diff. lock: REMOVE OIL SLINGER

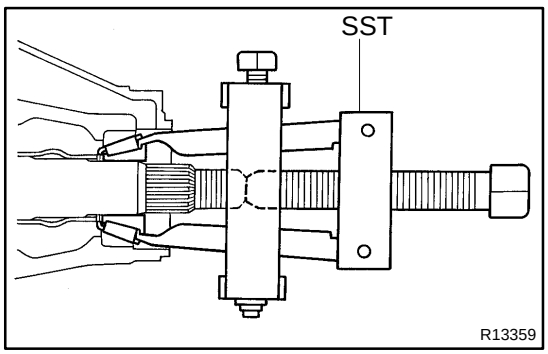

6. REMOVE FRONT BEARING

Using SST, remove the front bearing from the drive pinion.

SST 09556–22010

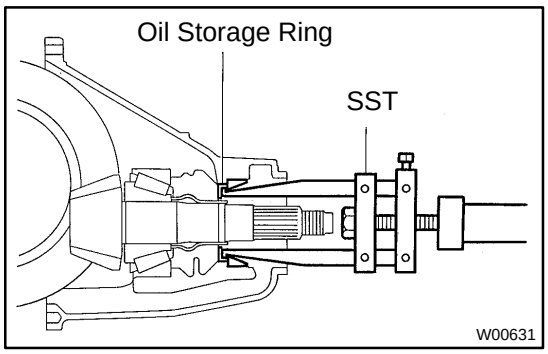

7. 3RZ–FE, 5VZ–FE w/ Diff. lock:
REMOVE FRONT BEARING OUTER RACE AND OIL STORAGE RING

(a) Using SST, remove the front bearing outer race.
SST 09308–00010

(b) Using a screwdriver, bend the oil storage ring and remove it.

8. REMOVE BEARING SPACER

(a) 3RZ–FE, 5VZ–FE w/o Diff. lock:
Remove the 2 washers.

(b) Remove the bearing spacer.

9. INSTALL NEW BEARING SPACER

(a) Install a new bearing spacer.

(b) 3RZ–FE, 5VZ–FE w/o Diff. lock:
Install the 2 washers.

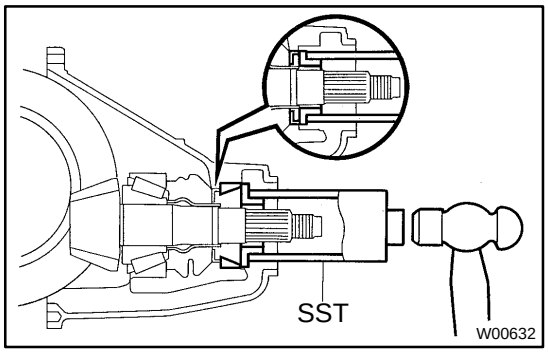

10. 3RZ–FE, 5VZ–FE w/ Diff. lock:
INSTALL OIL STORAGE RING AND FRONT BEARING OUTER RACE

(a) Using SST and a hammer, install a new oil storage ring.
SST 09316–60011 (09316–00011, 09316–00021)

(b) Using SST and a hammer, install the front bearing outer race.
SST 09316–60011 (09316–00011, 09316–00021)

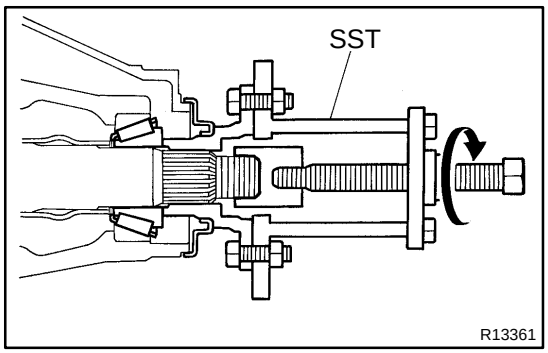

11. INSTALL FRONT BEARING

(a) Place the front bearing.

(b) Except 3RZ–FE, 5VZ–FE w/o Diff. lock:
Place the oil slinger.

(c) Using SST and the companion flange, install the front bearing then remove the companion flange.
SST 09950–30012 (09951–03010, 09953–03010, 09954–03010, 09955–03030, 09956–03020, 09956–03050)

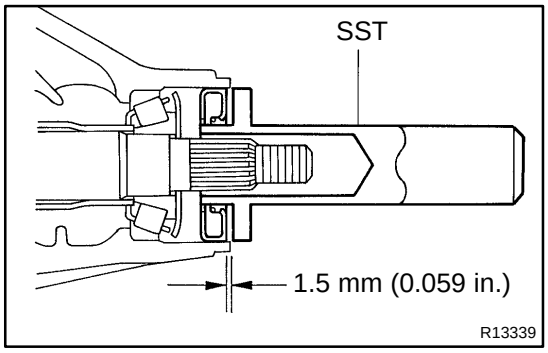

12. INSTALL NEW OIL SEAL

(a) Coat a new oil seal lip with MP grease.

(b) 2RZ–FE:
Using SST and a hammer, install the oil seal.
SST 09554–30011
Oil seal drive in depth: 1.5 mm (0.059 in.)

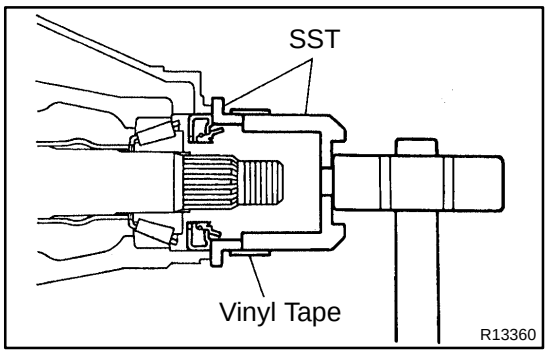

(c) 3RZ–FE, 5VZ–FE w/o Diff. lock:
Using SST and a plastic hammer, install the oil seal until its surface is flush with the differential carrier end.
SST 09316–12010, 09649–17010
Oil seal drive in depth: 0.5 mm (0.020 in.)

HINT:
Connect SST with vinyl tape.

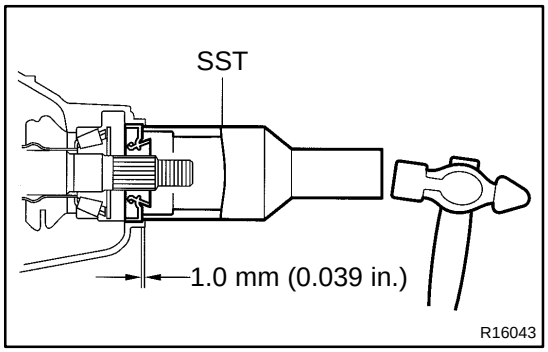

(d) 3RZ–FE, 5VZ–FE w/ Diff. lock:
Using SST and a hammer, install the oil seal.
SST 09214–76011
Oil seal drive in depth: 1.0 mm (0.039 in.)

13. INSTALL COMPANION FLANGE

(a) Place the companion flange on the drive pinion.

(b) Coat the threads of a new nut with hypoid gear oil.

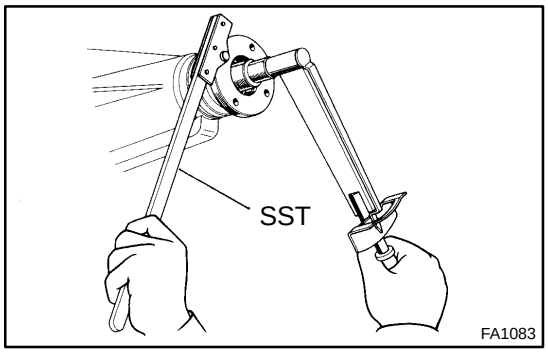

(c) Using SST to hold the flange, torque the nut.
SST 09330–00021
Torque:
2RZ–FE: 108 N·m (1,100 kgf·cm, 80 ft·lbf)
3RZ–FE, 5VZ–FE w/o Diff. lock:
147 N·m (1,500 kgf·cm, 109 ft·lbf)
3RZ–FE, 5VZ–FE w/ Diff. lock:
196 N·m (2,000 kgf·cm, 145 ft·lbf)

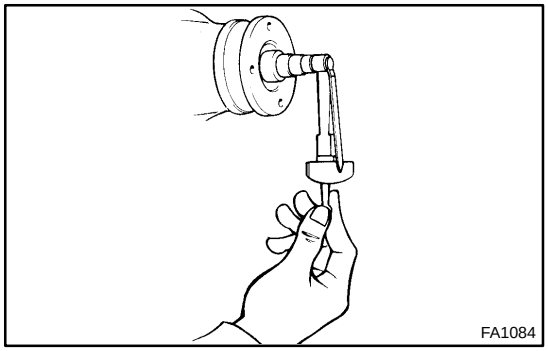

14. ADJUST DRIVE PINION PRELOAD
2RZ–FE: See page SA–149
3RZ–FE, 5VZ–FE w/o Diff. lock: See page SA–166
3RZ–FE, 5VZ–FE w/ Diff. lock: See page SA–185

15. STAKE DRIVE PINION NUT

16. CONNECT REAR PROPELLER SHAFT
2WD: See page PR–8
4WD and pre runner: See page PR–16

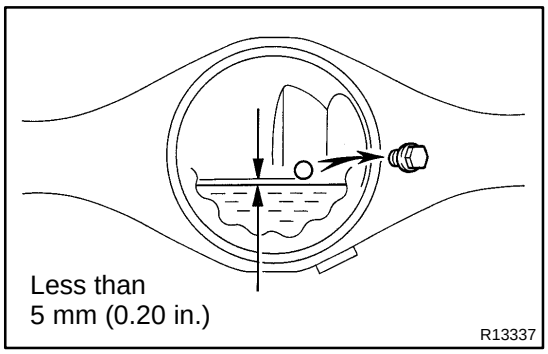

17. FILL DIFFERENTIAL WITH HYPOID GEAR OIL
Torque: 49 N·m (500 kgf·cm, 39 ft·lbf)
Oil type: Hypoid gear oil API GL–5
Recommended oil viscosity:
Above – 18˚C (0˚F) SAE 90
Below – 18˚C (0˚F) SAE 80W or 80W – 90
Capacity:

2RZ–FE	1.35 liters (1.43 US qts, 1.19 lmp. qts)
3RZ–FE, 5VZ–FE	4WD Extra long model: 2.45 liters (2.58 US qts., 2.16 lmp. qts) w/ Diff. lock Short model: 2.65 liters (2.80 US qts., 2.33 lmp. qts) w/ Diff. lock Extra long model: 2.95 liters (3.18 US qts., 2.60 lmp. qts) w/o Diff. lock: 2.55 liters (2.69 US qts., 2.24 lmp. qts)

REAR LEAF SPRING

SA0C2–06

COMPONENTS

HINT:
Pre runner is the model described below.
RZN191L–TRPDKAB, RZN196L–CRPDKAB, PZN196L–PRPDKAB, VZN195L–CRPDKAB, VZN195L–PRPDKAB

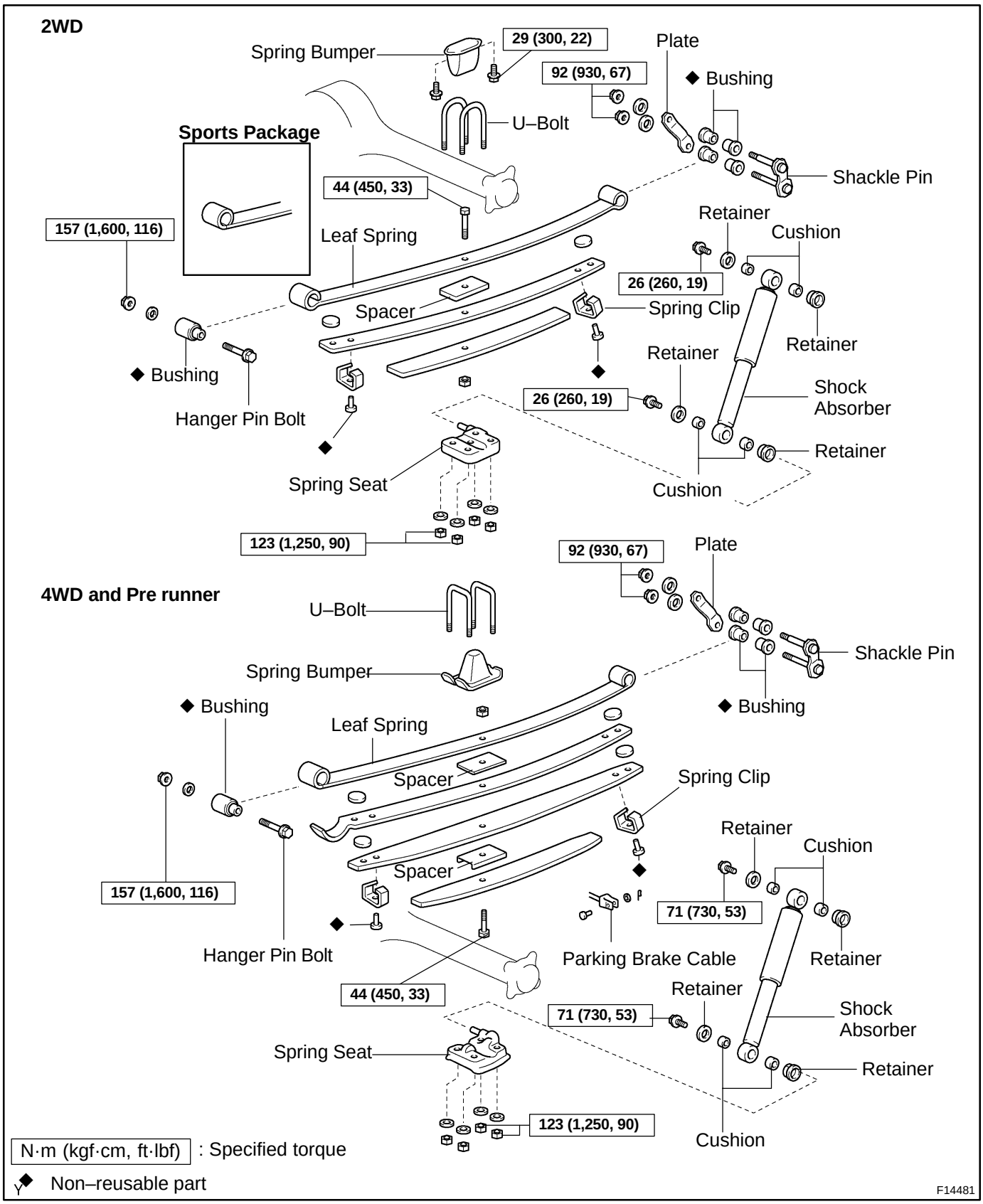
2WD
Spring Bumper
29 (300, 22)
92 (930, 67)
Plate
◆ Bushing
U–Bolt
Sports Package
Shackle Pin
44 (450, 33)
157 (1,600, 116)
Leaf Spring
Retainer
Cushion
26 (260, 19)
Spacer
Spring Clip
Retainer
◆ Bushing
Hanger Pin Bolt
Retainer
26 (260, 19)
Shock Absorber
Retainer
Spring Seat
Cushion
123 (1,250, 90)
92 (930, 67)
Plate
4WD and Pre runner
U–Bolt
Shackle Pin
Spring Bumper
◆ Bushing
◆ Bushing
Leaf Spring
Spacer
Spring Clip
Retainer
Cushion
Spacer
157 (1,600, 116)
71 (730, 53)
Hanger Pin Bolt
Parking Brake Cable
Retainer
44 (450, 33)
Retainer
71 (730, 53)
Shock Absorber
Spring Seat
Retainer
123 (1,250, 90)
Cushion
N·m (kgf·cm, ft·lbf) : Specified torque
◆ Non–reusable part
F14481

SA0C5–01

INSTALLATION

Installation is in the reverse order of removal (See page SA–210).

SA0C3–06

REMOVAL

1. SUPPORT BODY WITH SAFETY STANDS

(a) Jack up and support the body on safety stands.

(b) Lower the axle housing until the leaf spring tension is free, and keep it at this position.

2. REMOVE REAR WHEEL

Torque: 110 N·m (1,150 kgf·cm, 83 ft·lbf)

3. 4WD:

DISCONNECT PARKING BRAKE CABLE

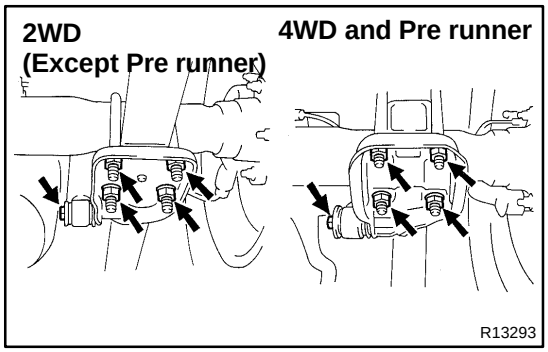

4. DISCONNECT REAR SHOCK ABSORBER

Remove the bolt and disconnect the shock absorber from the spring seat.

Torque:

2WD (except pre runner): 26 N·m (260 kgf·cm, 19 ft·lbf)

4WD and pre runner: 71 N·m (730 kgf·cm, 53 ft·lbf)

5. REMOVE U–BOLTS

(a) Remove the 4 U–bolt mounting nuts and washers.

(b) Remove the spring seat and U–bolts.

Torque: 123 N·m (1,250 kgf·cm, 90 ft·lbf)

HINT:

At the time of installation, tighten the U–bolts so that the length of all the U–bolts under the spring seat is the same.

(c) 4WD and pre runner:

Remove the spring bumper.

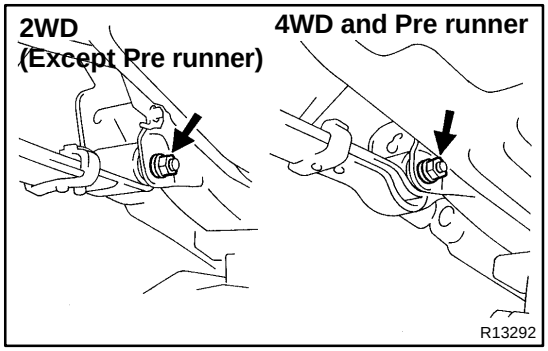

6. REMOVE LEAF SPRING

(a) Remove the nut, washer and hanger pin bolt.

Torque: 157 N·m (1,600 kgf·cm, 116 ft·lbf)

HINT:

At the time of installation, after stabilizing the suspension, torque the nut.

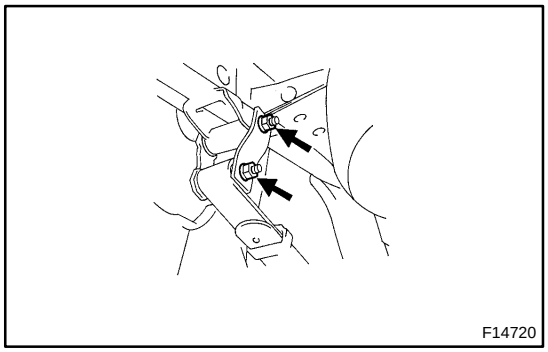

(b) Remove the 2 shackle pin mounting nuts and washers.

Torque: 92 N·m (930 kgf·cm, 67 ft·lbf)

HINT:

At the time of installation, after stabilizing the suspension, torque the nut.

(c) Remove the shackle pin plate, and rear leaf spring.

SA22U–01

REPLACEMENT

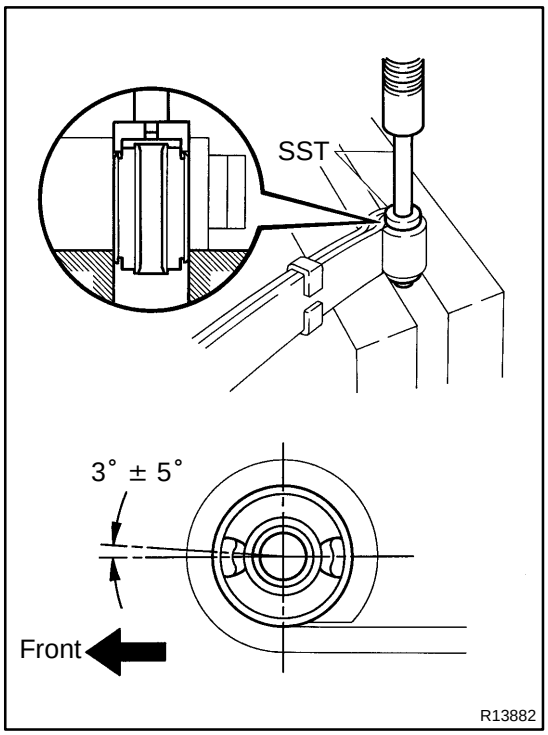

1. REPLACE FRONT EYE BUSHING

Using SST and a press, replace the bushing.

SST 09550–10013 (09252–10010, 09553–10010)

HINT:

When installing the bushing, as shown in the illustration.

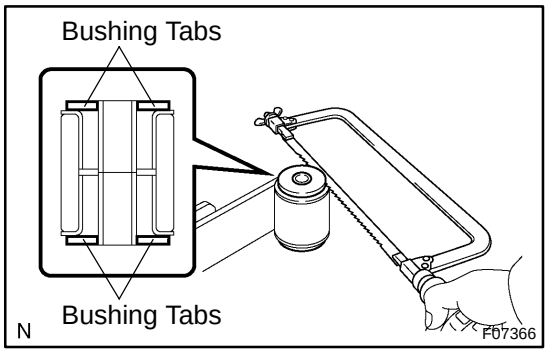

2. REPLACE REAR EYE BUSHINGS

(a) Using a saw, cut the both bushing tabs as shown in the illustration.

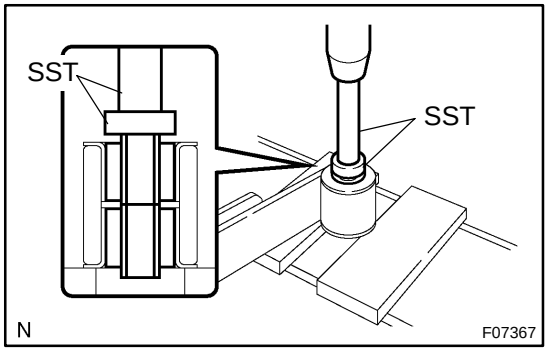

(b) Using SST and a press, press out the both inner tubes and rubber parts of the bushings.

SST 09950–60010 (09951–00350)
09950–70010 (09951–07150)

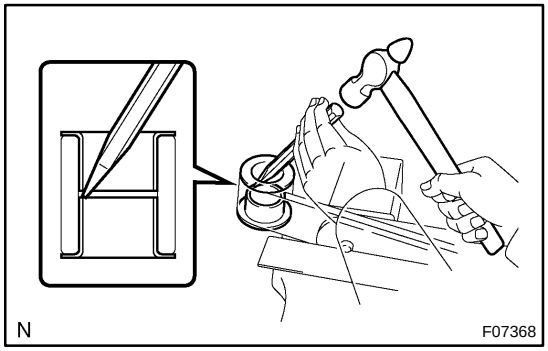

(c) Using a chisel and hammer, tap out the outer tubes.

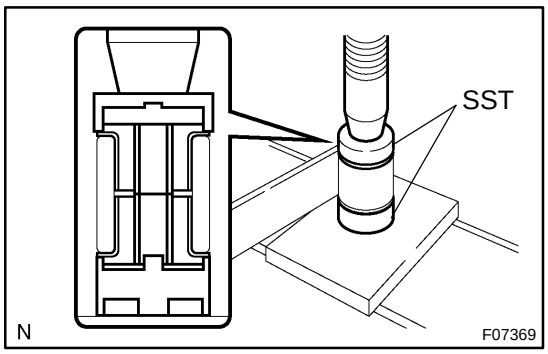

(d) Using SST and a press, install 2 new bushings.
SST 09710–28012 (09710–07062),
09710–30041 (09710–03211)

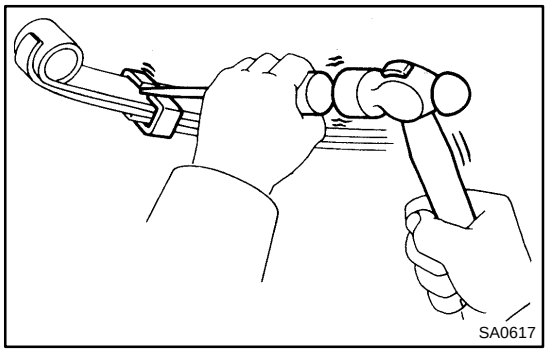

3. REPLACE LEAF SPRING

(a) Bend to open the spring clip.
Using a chisel and hammer, pry up the spring clip.

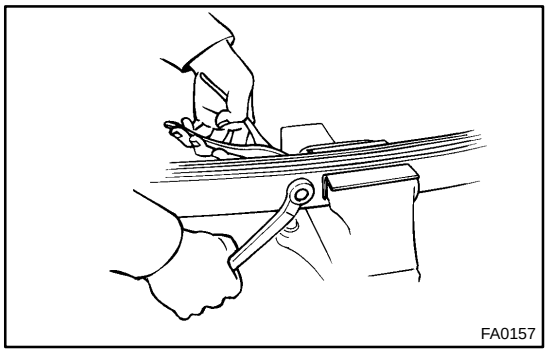

(b) Remove the center bolt.
Hold the spring near the center bolt in a vise and remove the center bolt.

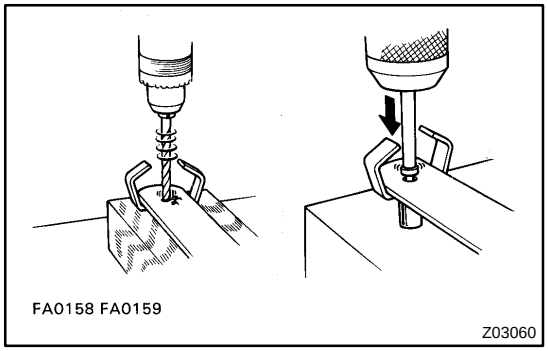

(c) Replace the spring clip.
(1) Drill off the head of the rivet and drive it out.
(2) Install a new rivet into the holes of the spring leaf and clip. Then rivet with a press.

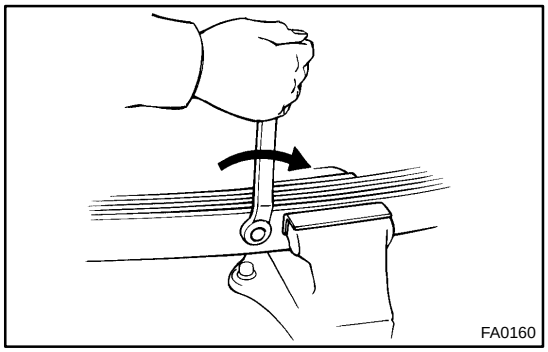

(d) Install spring center bolt.
(1) Align the leaf holes and secure the leaves with a vise.
(2) Install the spring center bolt.
Torque: 44 N·m (450 kgf·cm, 33 ft·lbf)

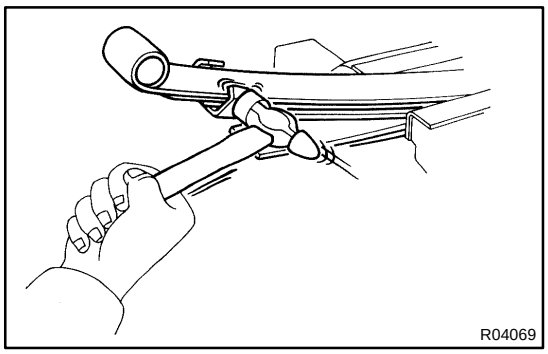

(e) Bend the spring clip.
Using a hammer, bend the spring clip into the position.

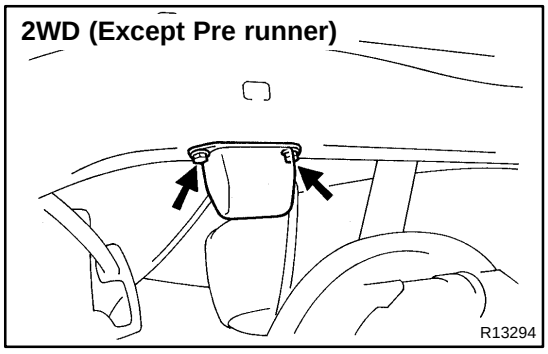

4. 2WD (except pre runner): REPLACE SPRING BUMPER

(a) Remove the 2 bolts and spring bumper.
(b) Install the 2 bolts and spring bumper.
Torque: 29 N·m (300 kgf·cm, 22 ft·lbf)

REAR SHOCK ABSORBER

SA0BX–07

COMPONENTS

HINT:

Pre runner is the model described below.

RZN191L–TRPDKAB, RZN196L–CRPDKAB, PZN196L–PRPDKAB, VZN195L–CRPDKAB, VZN195L–PRPDKAB

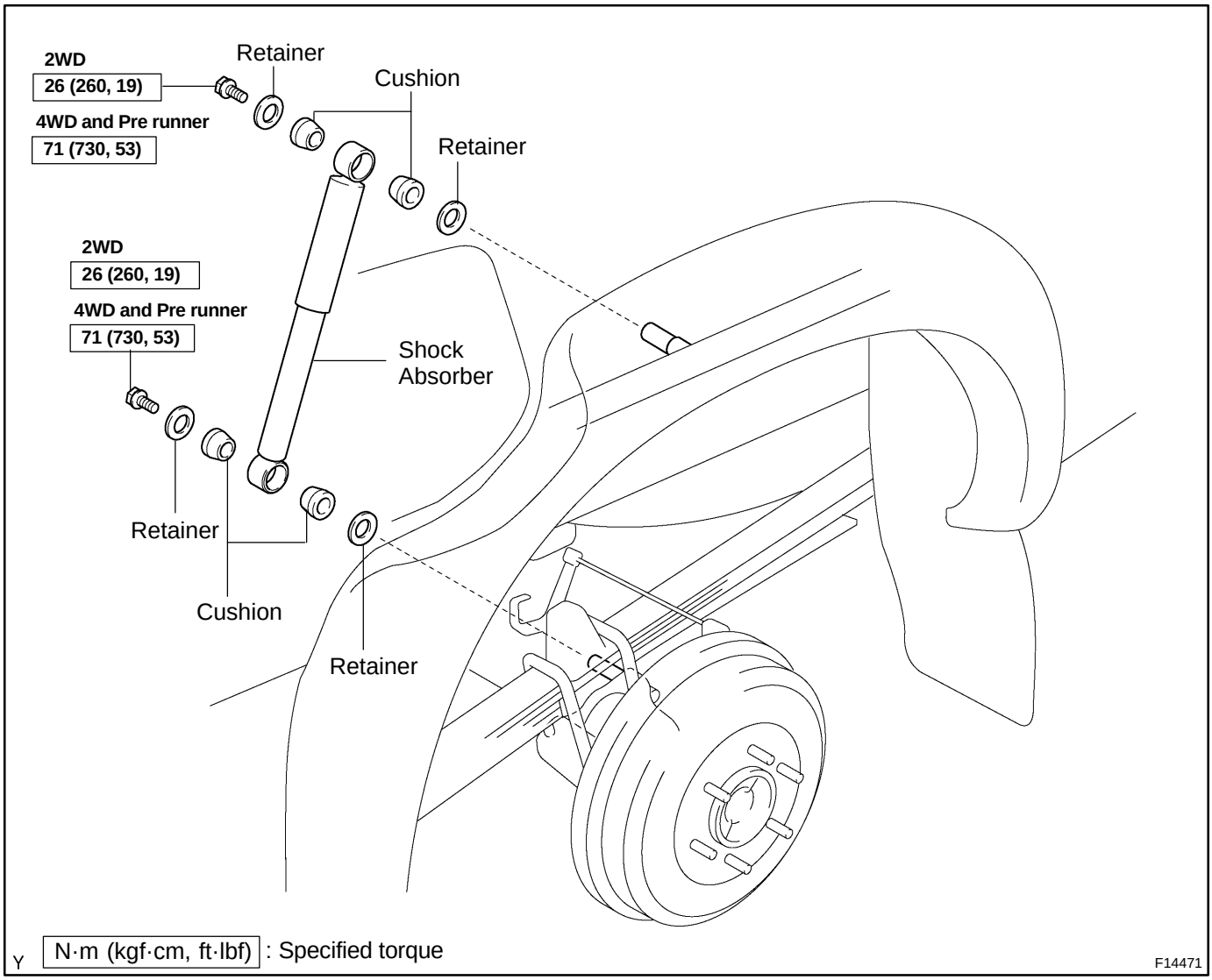

SA0C0–03

DISPOSAL

1. FULLY EXTEND SHOCK ABSORBER ROD

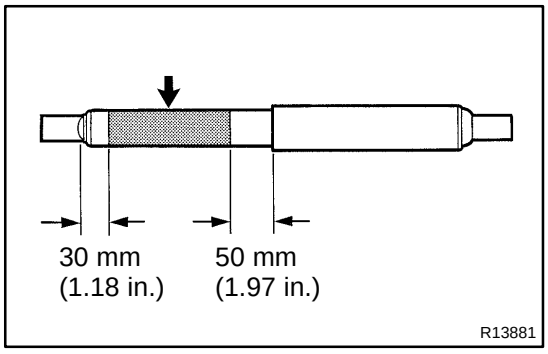

2. DRILL HOLE TO REMOVE GAS FROM CYLINDER

Using a drill, make a hole in the cylinder, as shown in the illustration to remove the gas inside.

CAUTION:

The discharged gas is harmless, but be careful of chips which may fly up when drilling.

SA0BZ–03

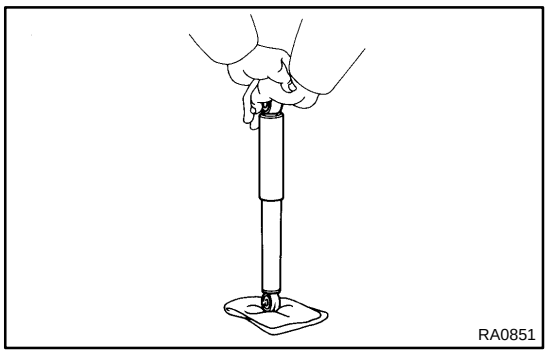
RA0851

INSPECTION

INSPECT SHOCK ABSORBER

Compress and extend the shock absorber rod and check that there is no abnormal resistance or unusual operation sounds. If there is any abnormality, replace the shock absorber with a new one.

NOTICE:

When discarding the shock absorber, see DISPOSAL on page SA–206.

SA0C1–01

INSTALLATION

Installation is in the reverse order of removal (See page SA–204).

SA0BY–02

REMOVAL

1. SUPPORT BODY WITH SAFETY STANDS

(a) Jack up and support the body on safety stands.

(b) Lower the axle housing until the leaf spring tension is free, and keep it at this position.

2. REMOVE REAR SHOCK ABSORBER

(a) Remove the 2 rear shock absorber set bolts.

Torque:
2WD: 26 N·m (260 kgf·cm, 19 ft·lbf)
4WD and pre runner: 71 N·m (730 kgf·cm, 53 ft·lbf)

(b) Remove the rear shock absorber.

REAR WHEEL HUB BOLT

SA0BC–03

REPLACEMENT

1. REMOVE REAR WHEEL AND BRAKE DRUM

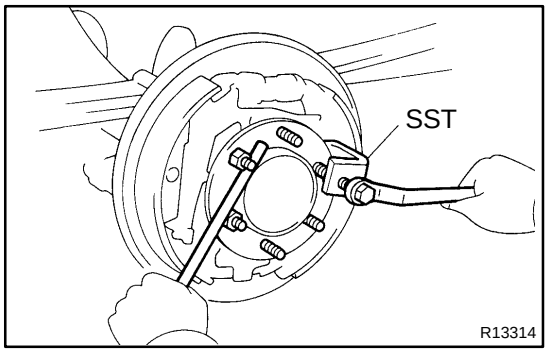

2. REMOVE REAR HUB BOLT

Using SST and a brass bar or an equivalent, remove the hub bolt.

SST 09650–17011

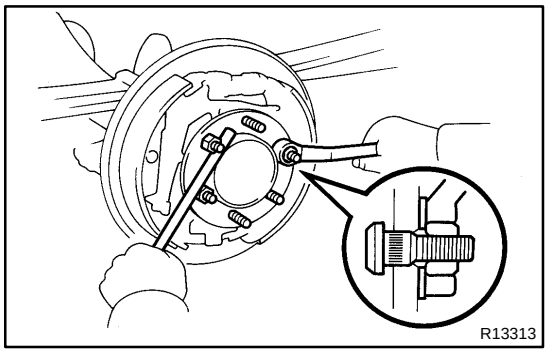

3. INSTALL HUB BOLT

(a) Install a washer and nut to a new hub bolt as shown in the illustration.

(b) Using a brass bar or an equivalent to hold, install the hub bolt by torquing the nut.

4. INSTALL BRAKE DRUM AND REAR WHEEL

Torque: 110 N·m (1,150 kgf·cm, 83 ft·lbf)

TIRE AND WHEEL

SA091–15

INSPECTION

HINT:

Pre runner is the model described below.
RZN191L–TRPDKAB, RZN196L–CRPDKAB,
RZN196L–PRPDKAB, VZN195L–CRPDKAB,
VZN195L–PRPDKAB

1. INSPECT TIRE

(a) Check the tires for wear and proper inflation pressure.

Cold tire inflation pressure:

Tire size	Front kPa (kgf/cm^2, psi)	Rear kPa (kgf/cm^2, psi)
P205/75R15 97S	200 (2.0, 29)	200 (2.0, 29)
P235/55R16 96T	200 (2.0, 29)	220 (2.2, 32)
P225/75R15 102S	180 (1.8, 26)	200 (2.0, 29)
P265/70R16 111S	180 (1.8, 26)	180 (1.8, 26)
P265/70R16 111T		
Except double cab	180 (1.8, 26)	200 (2.0, 29)
Double cab	180 (1.8, 26)	180 (1.8, 26)

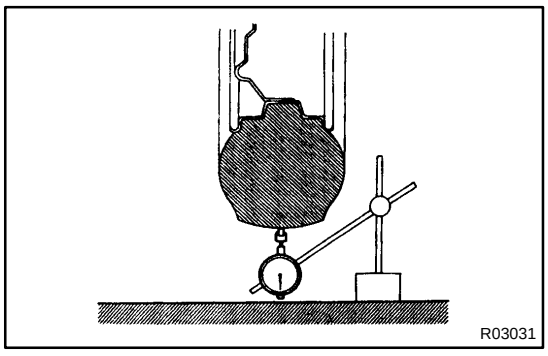

(b) Using a dial indicator, check the tire runout.
Tire runout: 3.0 mm (0.118 in.) or less

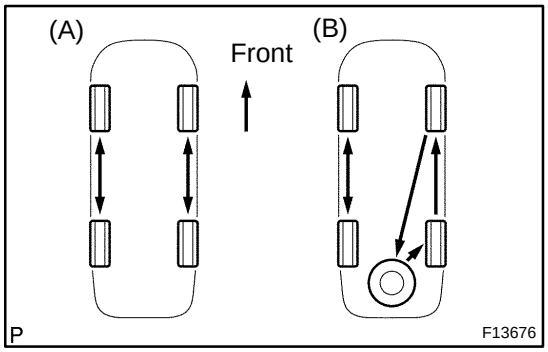

2. ROTATING TIRE

HINT:

- Rotate tires as shown in the illustration.
- Rotate as shown in (B) if the spare tire is included in the rotation.

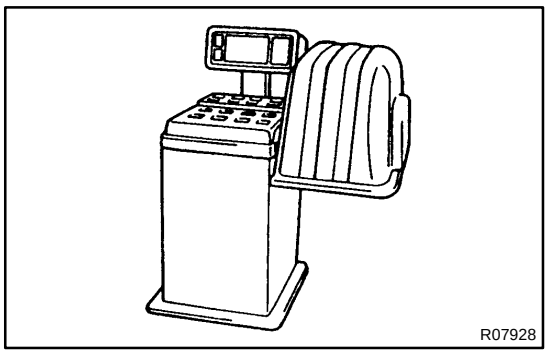

3. INSPECT WHEEL BALANCE

Using the Off–the–car balance, check and adjust the wheel balance.

Imbalance after adjustment:
2WD (except pre runner): 11.0 g (0.024 lb) or less
4WD and pre runner: 14.0 g (0.031 lb) or less

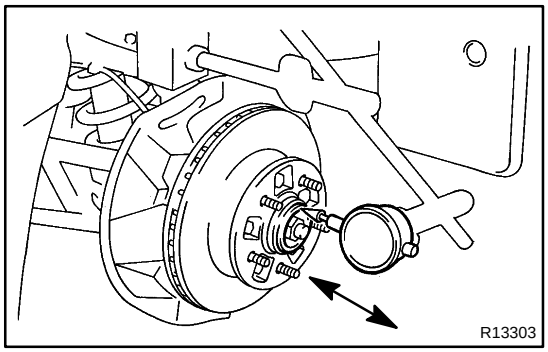

4. 2WD (except pre runner):
CHECK WHEEL BEARING LOOSENESS

Using a dial indicator near the center of the axle hub and check the backlash in bearing shaft direction.

Maximum: 0.05 mm (0.0020 in.)

5. CHECK FRONT SUSPENSION FOR LOOSENESS

6. CHECK STEERING LINKAGE FOR LOOSENESS

7. CHECK BALL JOINT FOR LOOSENESS

8. CHECK SHOCK ABSORBER WORKS PROPERLY

- Check that oil leaks
- Check the mounting bushings for wear
- Bounce front and rear of the vehicle

TROUBLESHOOTING

SA090–10

PROBLEM SYMPTOMS TABLE

Use the table below to help you find the cause of the problem. The numbers indicate the priority of the likely cause of the problem. Check each part in order. If necessary, replace these parts.

(w/ Differential locking system):

- **Check that center differential lock mode is set.**
- **When switching differential Free ↔ Lock, the indicator lamp will blink if the gears of the differential lock sleeve are not meshed. If this occurs, when the tires are rotated to apply differential power to the differential, the differential locks and the indicator lamp lights up.**

Symptom	Suspect Area	See page
Bottoming	1. Vehicle (Overloaded)	–
	2. Spring (Weak)	SA–70 SA–75 SA–208
	3. Shock absorber (Worn)	SA–72 SA–78 SA–205
Sways/pitches	1. Tire (Worn or improperly inflated)	SA–118
	2. Stabilizer bar (Bent or broken)	SA–72 SA–122
	3. Shock absorber (Worn)	SA–72 SA–78 SA–203
Front wheel shimmy	1. Tire (Worn or improperly inflated)	SA–4
	2. Wheel (Out of balance)	SA–4
	3. Shock absorber (Worn)	SA–72 SA–78
	4. Wheel alignment (Incorrect)	SA–6 SA–10
	5. Ball joints (Worn)	SA–86 SA–105 SA–108 SA–111 SA–113 SA–116
	6. Hub bearing (Loosen or worn)	SA–14
	7. Steering linkage (Loosen or worn)	–
	8. Steering gear (Out of adjustment or broken)	SR–54 SR–73
Abnormal tire wear	1. Tire (Improperly inflated)	SA–4
	2. Wheel alignment (Incorrect)	SA–6 SA–10
	3. Shock absorber (Worn)	SA–72 SA–78 SA–203
	4. Suspension parts (Worn)	–
Noise in front differential	1. Oil level (Low or wrong grade)	SA–41
	2. Excessive backlash between pinion and ring gear	SA–45
	3. Ring, pinion or side gear (Worn or chipped)	SA–45
	4. Pinion shaft bearing (Worn)	SA–45
	5. Side bearing (Worn)	SA–45
	6. Differential bearing (Loosen or worn)	SA–45

Oil leak from front differential	1. Oil level (Too high or wrong grade) 2. Front differential rear oil seal (Worn or damaged) 3. Side gear oil seal (Worn or damaged) 4. Companion flange (Loosen or damaged) 5. Side gear shaft (Damaged)	SA–41 SA–45 SA–45 SA–45 SA–45
Noise in rear axle	1. Oil level (Low or wrong grade) 2. Excessive backlash between pinion and ring gear 3. Ring, pinion or side gear (Worn or chipped) 4. Pinion shaft bearing (Worn) 5. Axle shaft bearing (Worn) 6. Differential bearing (Loosen or worn)	SA–135 SA–141 SA–158 SA–176 SA–141 SA–158 SA–176 SA–141 SA–158 SA–176 SA–126 SA–141 SA–158 SA–176
Oil leak from rear axle	1. Oil seal (Worn or damaged) 2. Rear axle housing (Cracked)	SA–126 –
Oil leak from rear differential	1. Oil level (Too high or wrong grade) 2. Oil seal (Worn or damaged) 3. Companion flange (Loosen or damaged)	SA–135 SA–135 SA–141 SA–158 SA–176
Indicator lights do not light up	1. Fusible link (Blown) 2. GAUGE fuse (Blown) 3. Bulb (Burned out) 4. Wiring or ground (Faulty)	– – – –
Indicator lights do not light up (Diff. lock control switch RR or FR position)	1. Diff. fuse (Blown) 2. Diff. lock control switch (Faulty) 3. Diff. lock ECU (Faulty) 4. Wiring or ground (Faulty)	– SA–199 SA–199 –
Differential lock does not operate	1. Diff. lock control switch (Faulty) 2. Diff. lock actuator (Faulty) 3. Diff. lock ECU (Faulty) 4. Differential carrier (Faulty) 5. Wiring or ground (Faulty)	SA–199 SA–199 SA–199 – –
After differential lock, lock is not released When vehicle speed is higher than approx. 8 km/h (5 mph)	1. Speed sensor (Faulty) 2. Diff. lock ECU (Faulty) 3. Wiring or ground (Faulty)	BE–39 SA–199 –

SA28L–01

REPAIR PROCEDURES

HINT:

This is a flow chart for vehicle pull.

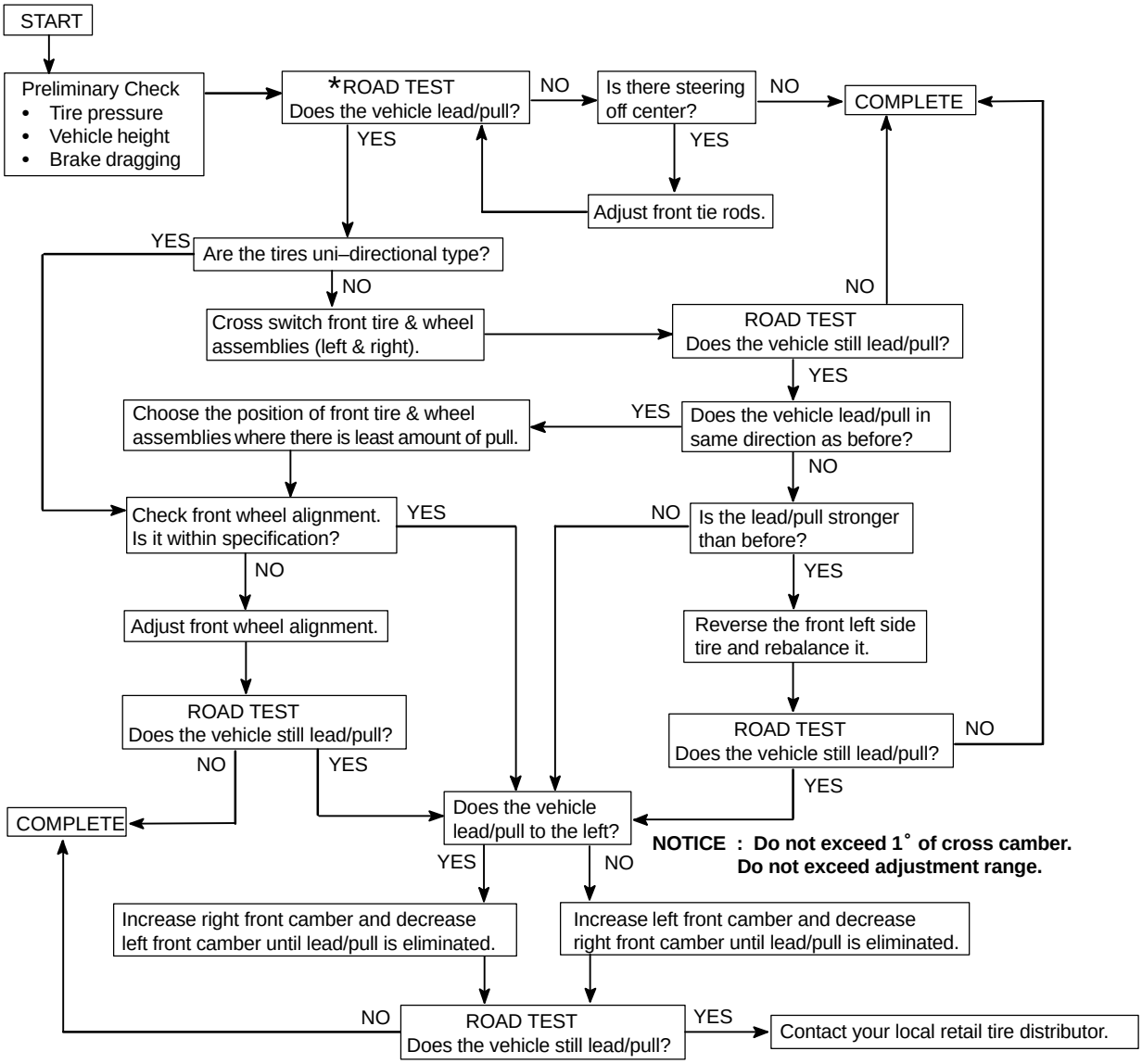

* Select a flat road where the vehicle can be driven in a straight line for 100 meters at a constant speed of 35mph. Please confirm safety and set the steering wheel to its straight position. Drive the vehicle in a straight line for 100 meters at a constant speed of 35mph without holding the steering wheel.

(1) The vehicle can keep straight but the steering wheel has some angle.
→ STEERING OFF CENTER (See page SR–10)

(2) The vehicle cannot keep straight.
→ STEERING PULL

AIR–FUEL RATIO (A/F) SENSOR

SF1OD–03

COMPONENTS

2RZ–FE (Bank 1 Sensor 1)

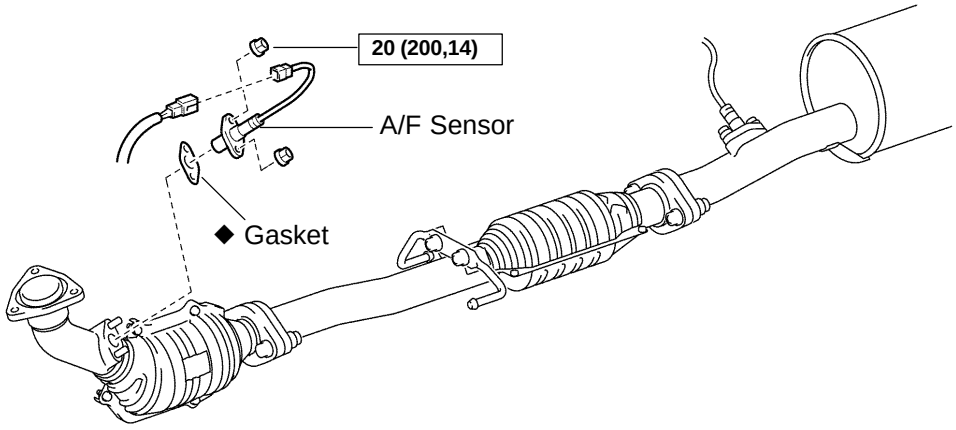

3RZ–FE (Bank 1 Sensor 1)

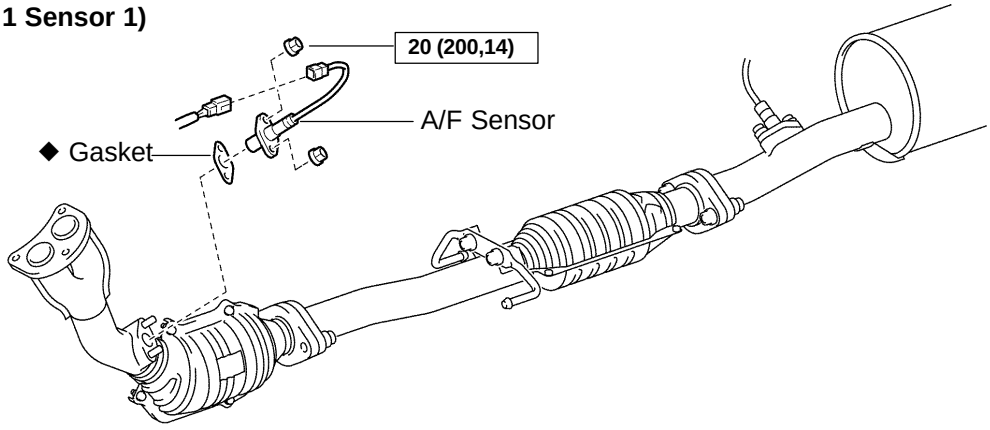

N·m (kgf·cm, ft·lbf) : Specified torque

◆ Non–reusable part

P

B15545

SF1OB–02

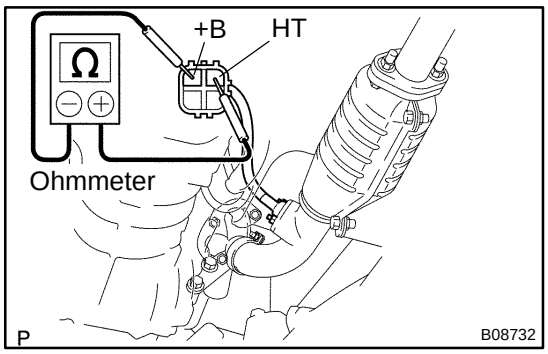

INSPECTION

1. INSPECT HEATER RESISTANCE OF A/F SENSOR

(a) Disconnect the sensor connector.

(b) Using an ohmmeter, measure the resistance between terminals +B and HT.

Resistance:

at 20˚C (68˚F)	0.8 – 1.4 Ω
at 800˚C (1,472˚F)	1.8 – 3.2 Ω

If the resistance is not as specified, replace the sensor.

Torque: 20 N·m (200 kgf·cm, 14 ft·lbf)

(c) Connect the sensor connector.

2. INSPECT OPERATION OF A/F SENSOR

(See page DI–185)

CIRCUIT OPENING RELAY

COMPONENTS

SF03S–03

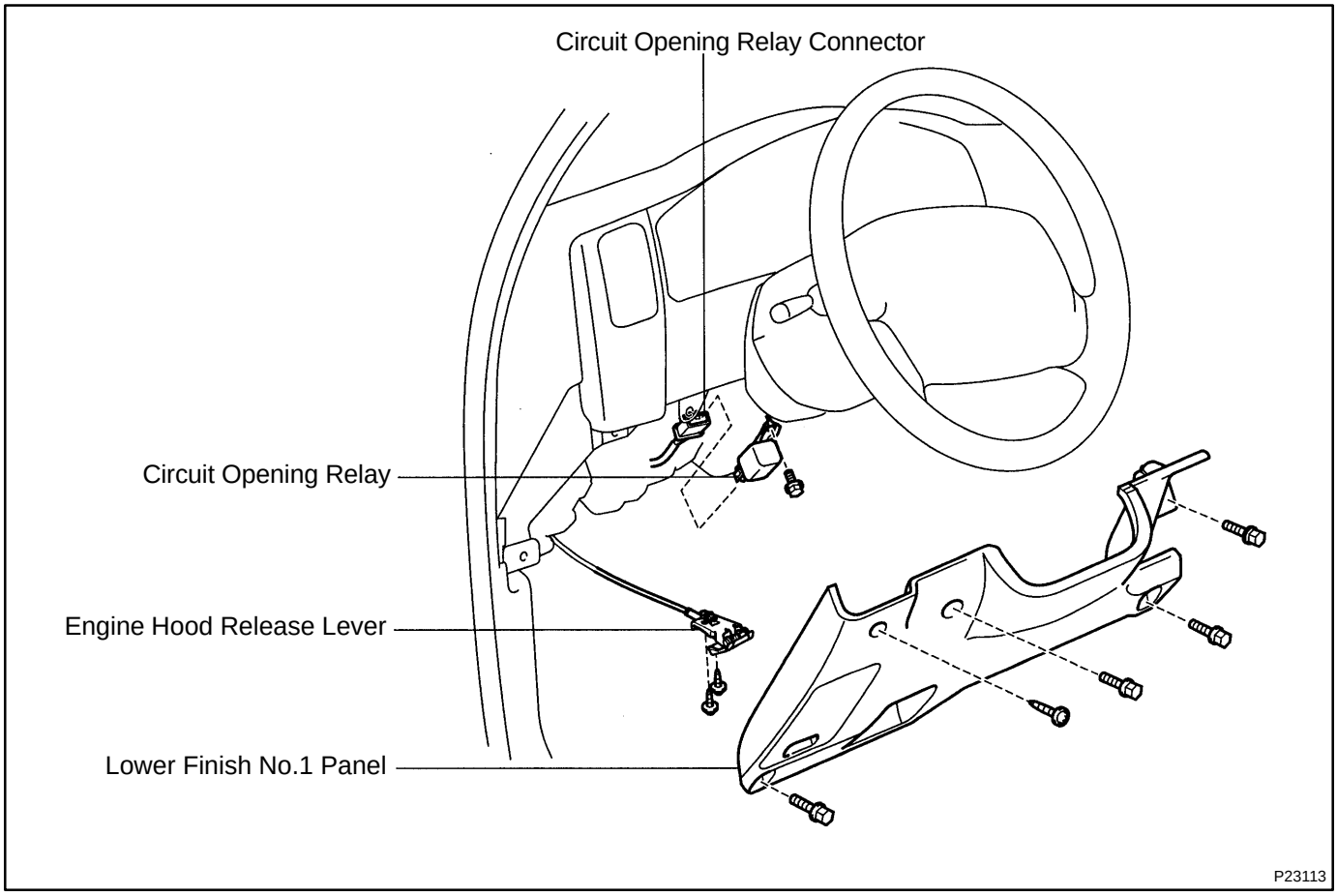

SF1TI–01

INSPECTION

1. REMOVE CIRCUIT OPENING RELAY

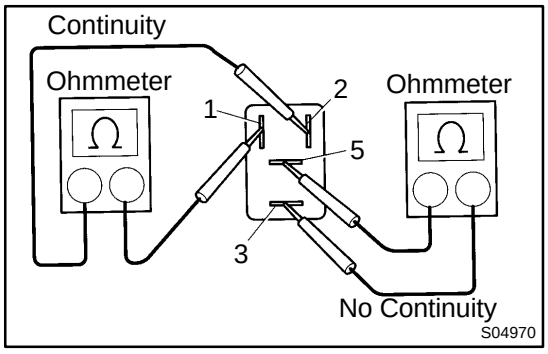

2. INSPECT CIRCUIT OPENING RELAY

(a) Inspect the relay continuity.

(1) Using and ohmmeter, check that there is continuity between terminals 1 and 2.

If there is continuity, replace the relay.

(2) Check that there is no continuity between terminals 3 and 5.

If there is continuity, replace the relay.

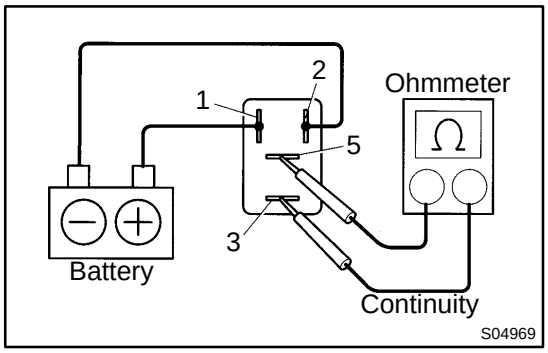

(b) Inspect the relay operation.

(1) Apply battery positive voltage across terminals 1 and 2.

(2) Using an ohmmeter, check that there is continuity between terminals 3 and 5.

If there is no continuity, replace the relay.

3. REINSTALL CIRCUIT OPENING RELAY

ENGINE CONTROL MODULE (ECM)

COMPONENTS

SF043–03

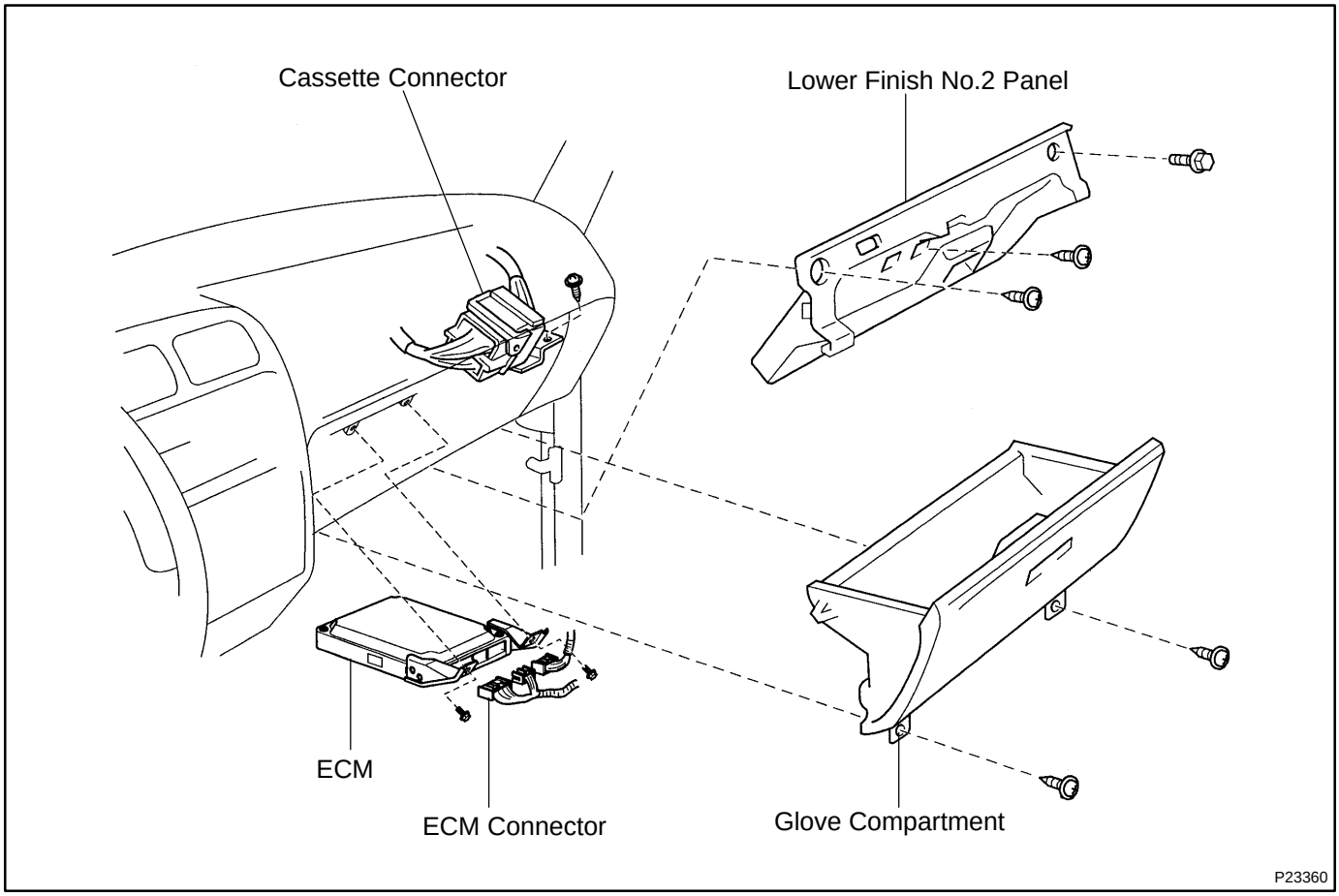

SF17S–01

INSPECTION

INSPECT ECM (See page DI–22)

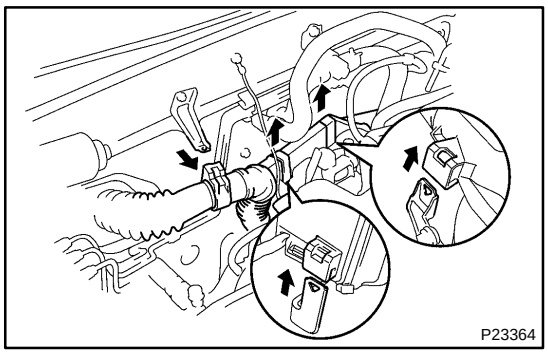

ENGINE COOLANT TEMPERATURE (ECT) SENSOR

SF03X–02

INSPECTION

1. DRAIN ENGINE COOLANT

2. REMOVE ECT SENSOR

(a) Disconnect the engine wire protector from the 3 brackets.

(b) Disconnect the ECT sensor connector.

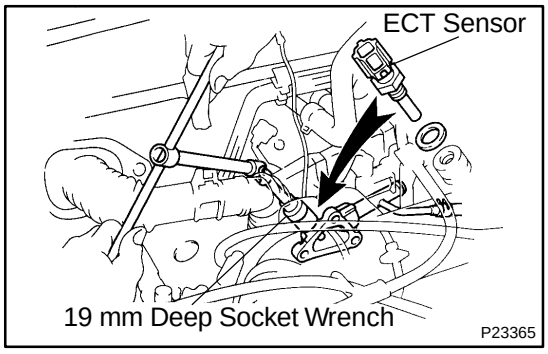

(c) Using a 19 mm deep socket wrench, remove the ECT sensor and gasket.

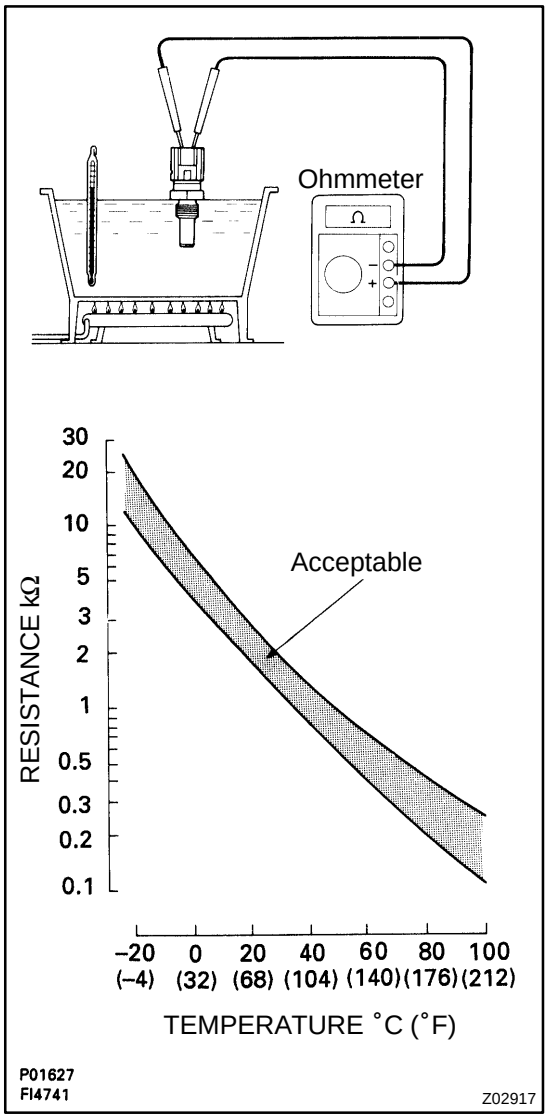

3. INSPECT ECT SENSOR

Using an ohmmeter, measure the resistance between the terminals.

Resistance: Refer to the chart graph

If the resistance is not as specified, replace the ECT sensor.

4. REINSTALL ECT SENSOR

(a) Install a new gasket to the ECT sensor.

(b) Using a 19 mm deep socket wrench, install the ECT sensor.

Torque: 20 N·m (200 kgf·cm, 14 ft·lbf)

(c) Connect the ECT sensor connector.

(d) Install the engine wire protector to the 3 brackets.

5. REFILL WITH ENGINE COOLANT

EXHAUST GAS RECIRCULATION (EGR) GAS TEMPERATURE SENSOR (3RZ–FE)

SF1TH–01

INSPECTION

1. **REMOVE EGR VALVE (See page EC–13)**
2. **REMOVE EGR GAS TEMPERATURE SENSOR**

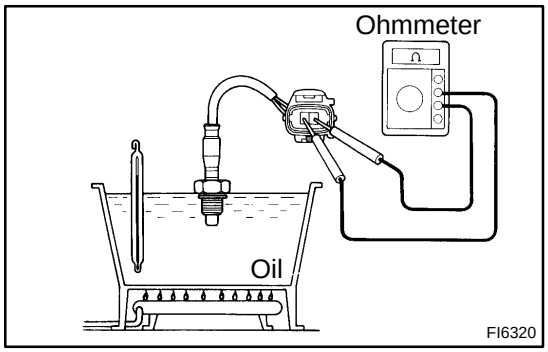

3. **INSPECT EGR GAS TEMPERATURE SENSOR**

Using an ohmmeter, measure the resistance between the terminals.

Resistance:

at 50˚C (122˚F)	64 – 97 kΩ
at 100˚C (212˚F)	11 – 16 kΩ
at 150˚C (302˚F)	2 – 4 kΩ

If the resistance is not as specified, replace the sensor.

4. **REINSTALL EGR GAS TEMPERATURE SENSOR**
5. **REINSTALL EGR VALVE**

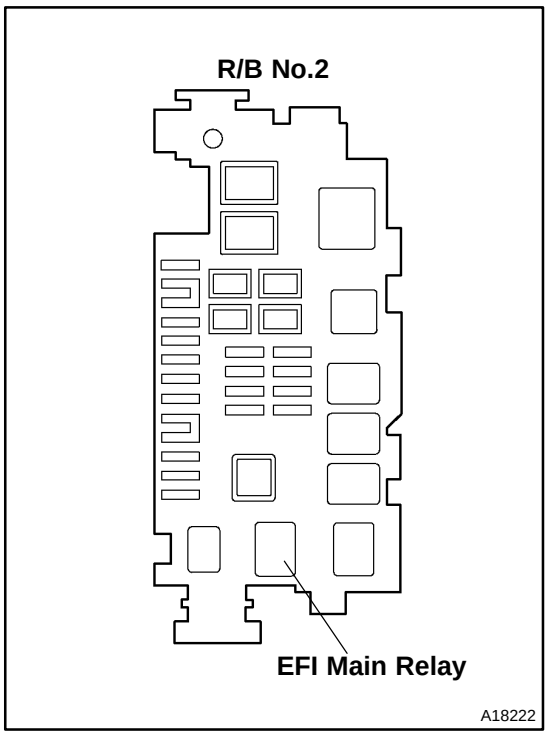

EFI MAIN RELAY

SF03R–04

INSPECTION

1. REMOVE EFI MAIN RELAY (Marking: EFI)

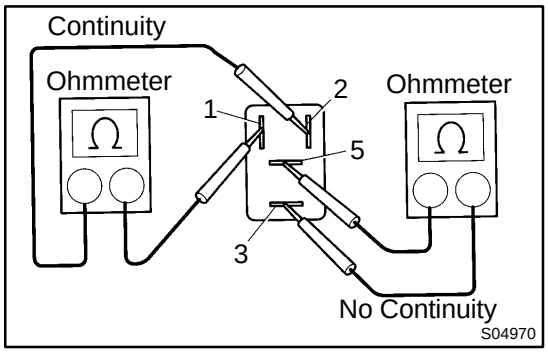

2. INSPECT EFI MAIN RELAY

(a) Inspect the relay continuity.

(1) Using an ohmmeter, check that there is continuity between terminals 1 and 2.

If there is no continuity, replace the relay.

(2) Check that there is no continuity between terminals 3 and 5.

If there is continuity, replace the relay.

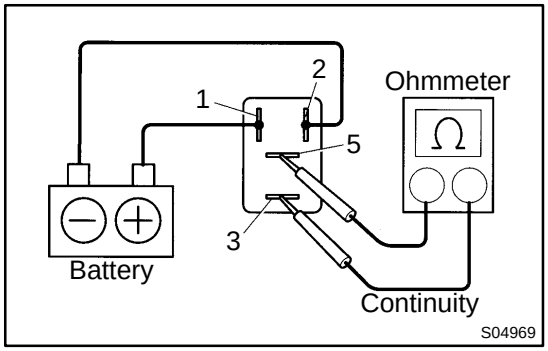

(b) Inspect the relay operation.

(1) Apply battery positive voltage across terminals 1 and 2.

(2) Using an ohmmeter, check that there is continuity between terminals 3 and 5.

If there is no continuity, replace the relay.

3. REINSTALL EFI MAIN RELAY

FUEL CUT RPM

SF047–02

INSPECTION

1. WARM UP ENGINE

Allow the engine to warm up to normal operating temperature.

2. CONNECT TOYOTA HAND–HELD TESTER OR OBDII SCAN TOOL (See page EM–10)

3. INSPECT FUEL CUT OFF RPM

(a) Increase the engine speed to at least 3,500 rpm.

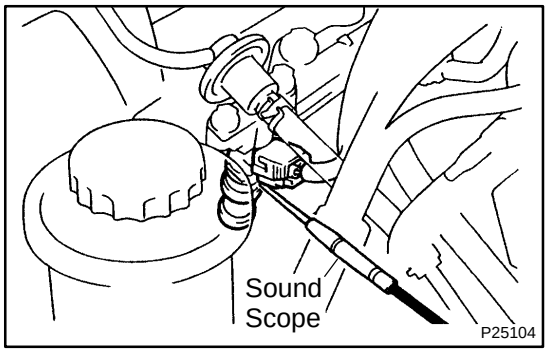

(b) Using a sound scope, check for injector operating noise.

(c) Check that when the throttle lever is released, injector operation noise stops momentarily and then resumes.

HINT:

Measure with the A/C OFF.

Fuel return rpm:

M/T	1,400 rpm
A/T	1,500 rpm

4. DISCONNECT TOYOTA HAND–HELD TESTER OR OBDII SCAN TOOL

FUEL PRESSURE REGULATOR

COMPONENTS

SF033–04

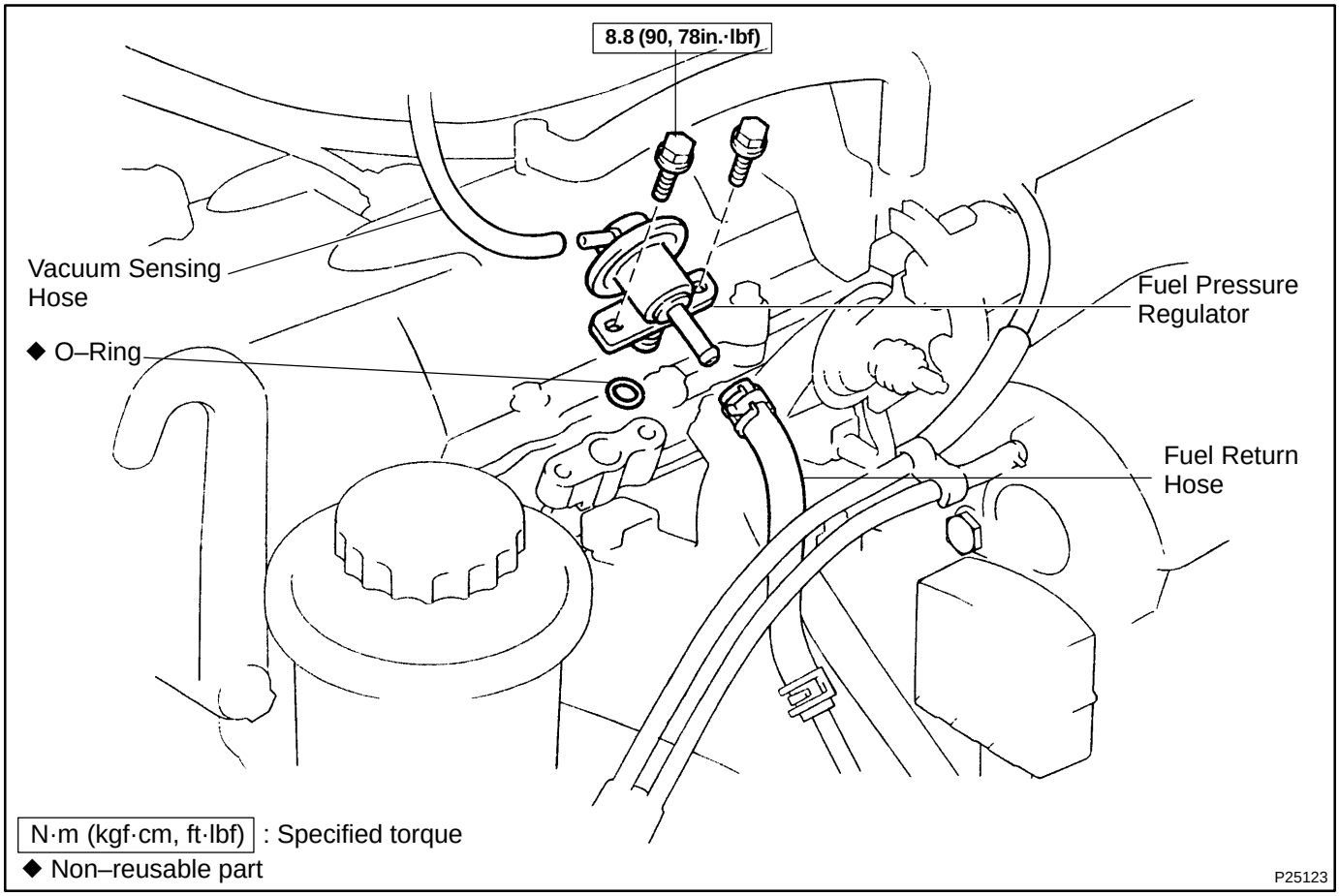

SF17F–02

INSTALLATION

Installation is in the reverse order of removal (See page SF–13).

SF034–02

REMOVAL

1. DISCONNECT VACUUM SENSING HOSE FROM FUEL PRESSURE REGULATOR

2. DISCONNECT FUEL RETURN HOSE FROM FUEL PRESSURE REGULATOR

CAUTION:

Put a suitable container or shop towel under the pressure regulator.

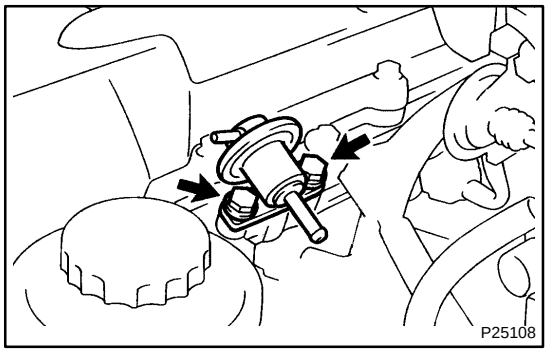

3. REMOVE FUEL PRESSURE REGULATOR

(a) Remove the 2 bolts and fuel pressure regulator.
Torque: 8.8 N·m (90 kgf·cm, 78 in.·lbf)

(b) Remove the O–ring.

HINT:

At the time of installation, please refer to the following items.

Use a new O–ring.

FUEL TANK AND LINE

SF03B–04

COMPONENTS

CAUTION:

- **Always use new gaskets when replacing the fuel tank or component parts.**
- **Apply the proper torque to all parts tightened.**

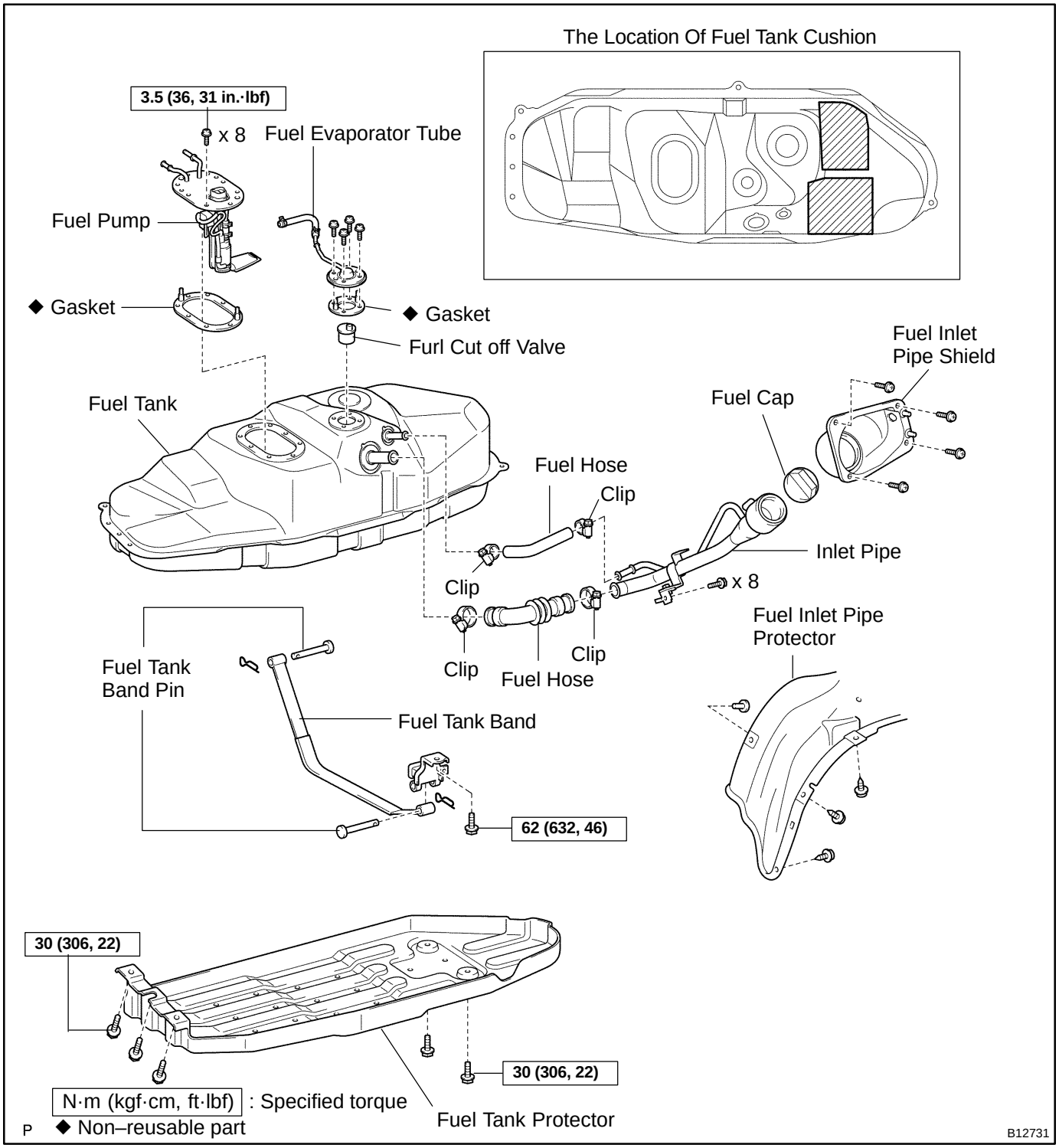

SF03C–04

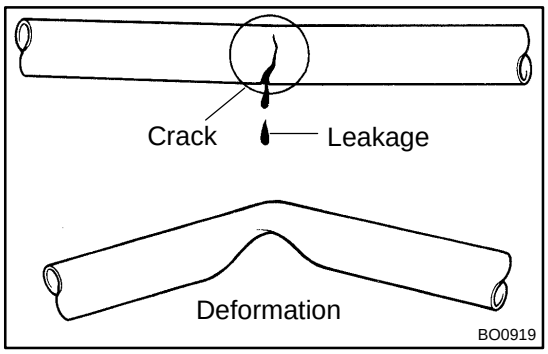

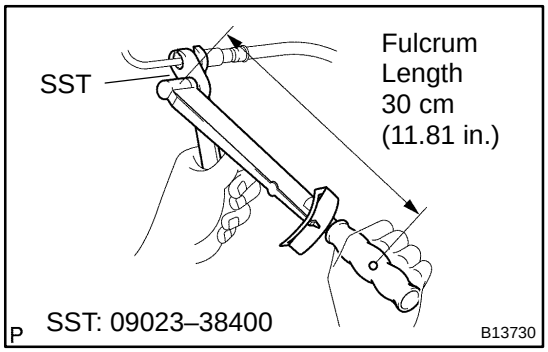

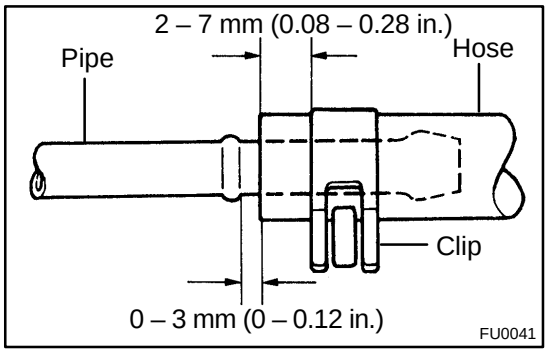

INSPECTION

INSPECT FUEL TANK AND LINE

(a) Check the fuel lines for cracks or leakage, and all connections for deformation.
(b) Check the fuel tank vapor vent system hoses and connections for looseness, sharp bends or damage.
(c) Check the fuel tank for defamation, cracks, fuel leakage or tank band looseness.
(d) Check the filler neck for damage or fuel leakage.
(e) Hose and tube connections are as shown in the illustration.

If a problem is found, repair or replace the part as necessary.

SF1TA–01

COMPONENTS

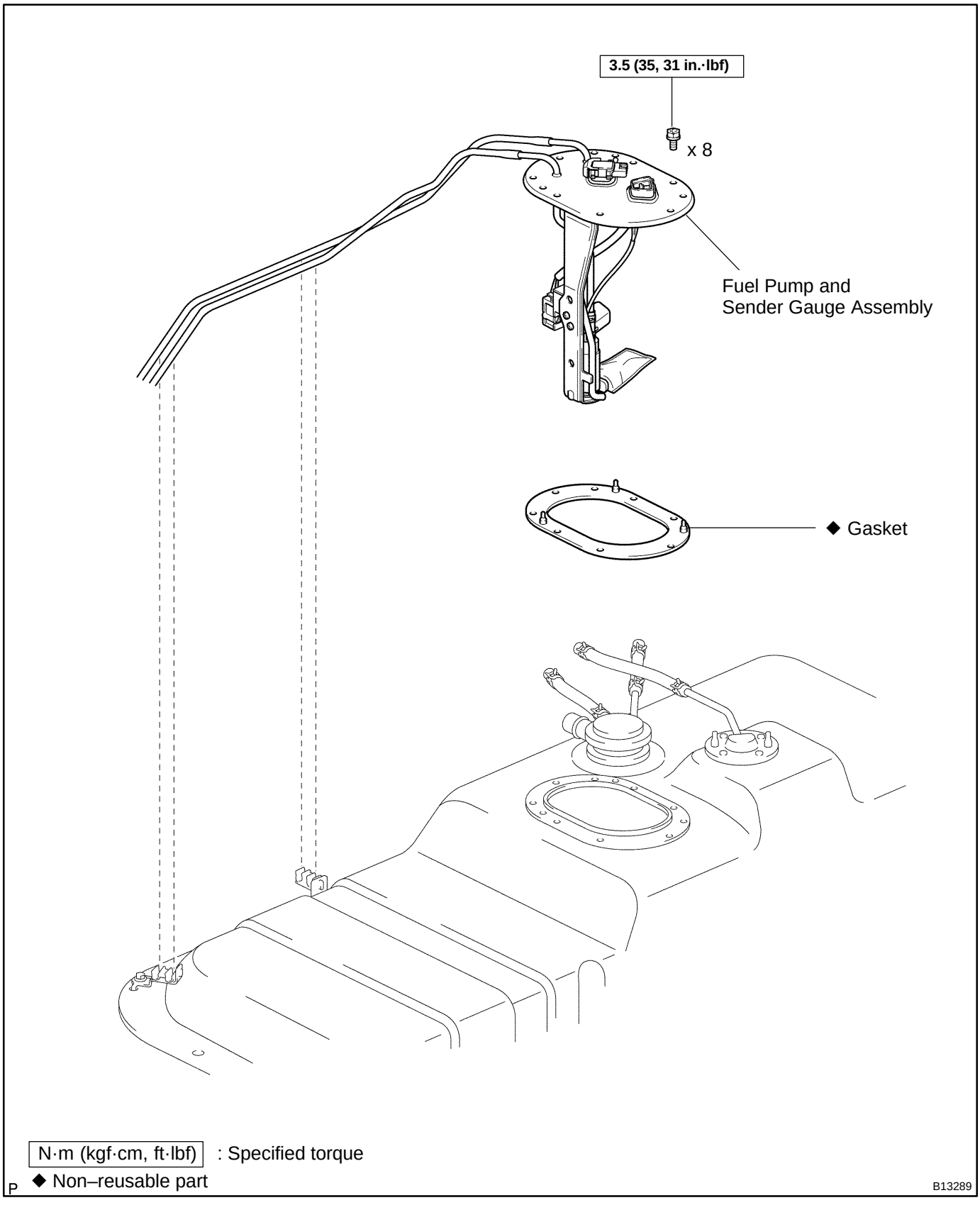

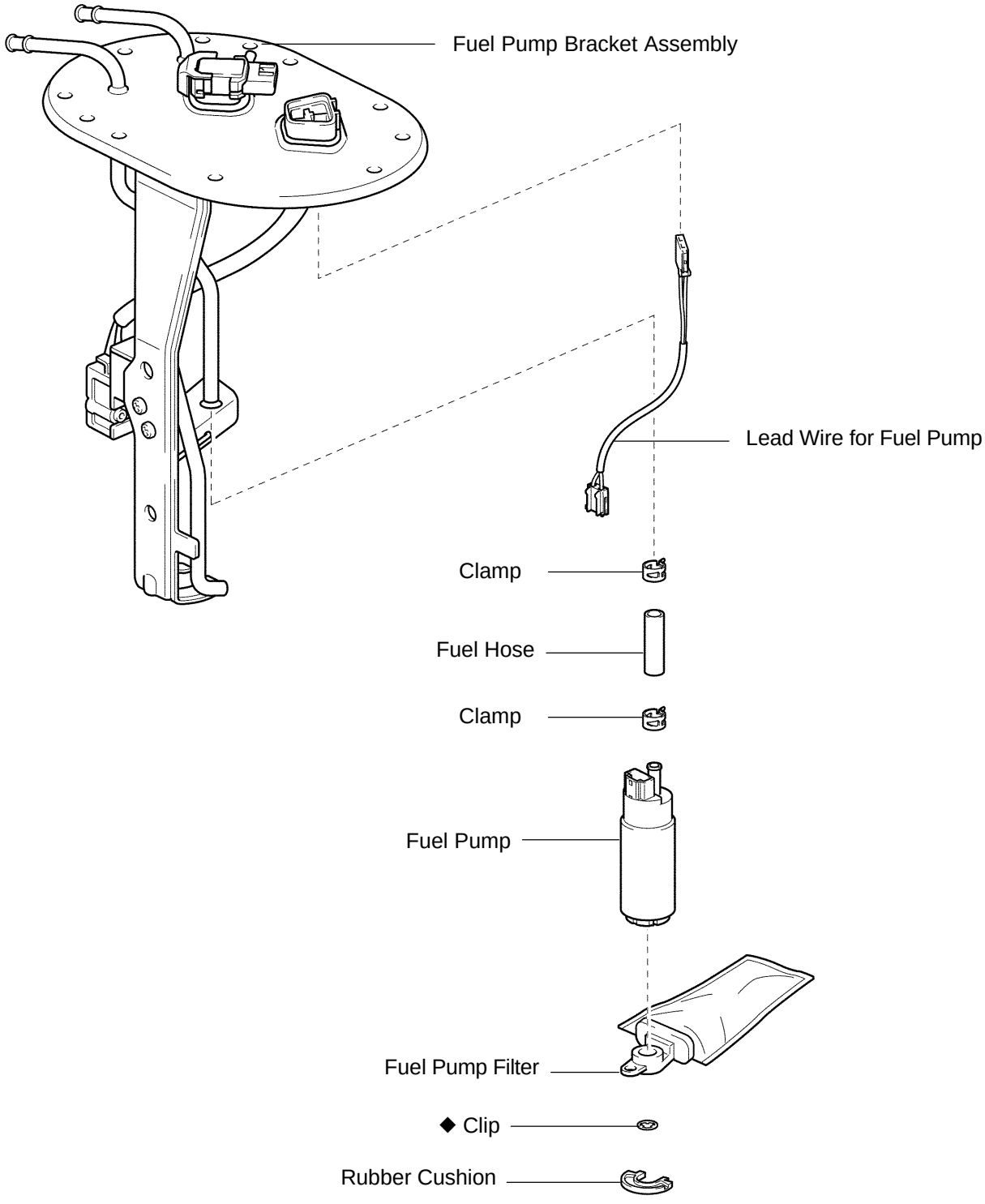

P ◆ Non–reusable part

B13290

SF1TB–01

INSTALLATION

1. INSTALL FUEL PUMP FILTER TO FUEL PUMP

Install the pump filter with a new clip.

2. INSTALL FUEL PUMP TO FUEL PUMP BRACKET

(a) Install the rubber cushion to the fuel pump.

(b) Connect the fuel hose to the outlet port of the fuel pump.

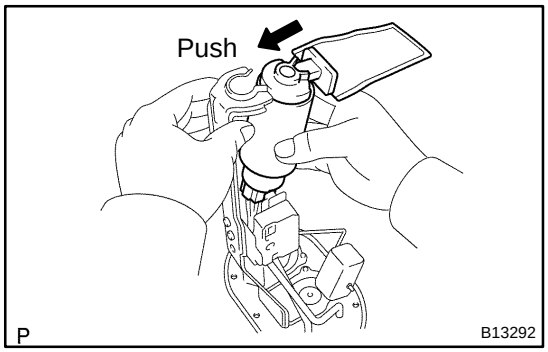

(c) Install the fuel pump by pushing the lower side of the fuel pump.

(d) Install the lead wire to the fuel pump and connector of the fuel suction plate.

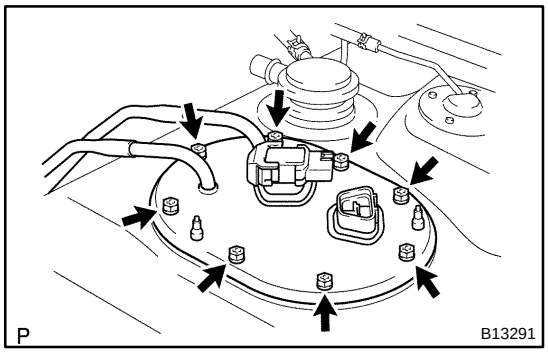

3. INSTALL FUEL PUMP AND SENDER GAUGE ASSEMBLY TO FUEL TANK

(a) Install a new gasket to the fuel suction plate.

(b) Insert the fuel pump and sender gauge assembly into the fuel tank.

(c) Install the fuel pump and sender gauge to the fuel tank with the 8 bolts.

Torque: 3.5 N·m (35 kgf·cm, 31 in.·lbf)

4. CONNECT FUEL MAIN TUBE AND RETURN TUBE TO FUEL TANK

5. CHECK FOR FUEL LEAKS (See page SF–1)

6. INSTALL FUEL TANK (See page SF–23)

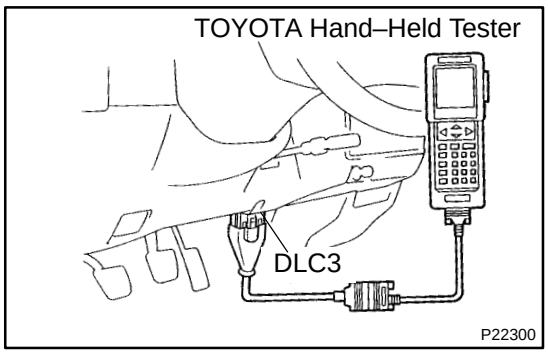

FUEL PUMP

SF17B–03

ON–VEHICLE INSPECTION

1. INSPECT FUEL PUMP OPERATION

(a) Connect the TOYOTA hand–held tester to the DLC3.

(b) Turn the ignition switch ON and push the TOYOTA hand–held tester main switch ON.

NOTICE:

Do not start the engine.

(c) Select the active test mode on the TOYOTA hand–held tester.

(d) Please refer to the TOYOTA hand–held tester operator's manual for further details.

(e) If you have no TOYOTA hand–held tester, connect the positive (+) and negative (–) leads from the battery to the fuel pump connector.

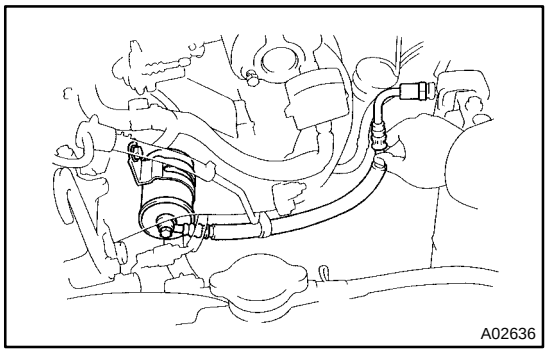

(f) Check that there is pressure in the inlet hose from the fuel filter.

HINT:

If there is fuel pressure, you will hear the sound of fuel flowing. If there is no pressure, check the M–fuse, fuses, EFI main relay, fuel pump, ECM and wiring connections.

(g) Turn the ignition switch OFF.

(h) Disconnect the TOYOTA hand–held tester.

2. CHECK FUEL PRESSURE

(a) Check that the battery positive voltage is above 12V.

(b) Disconnect the negative (–) terminal cable from the battery.

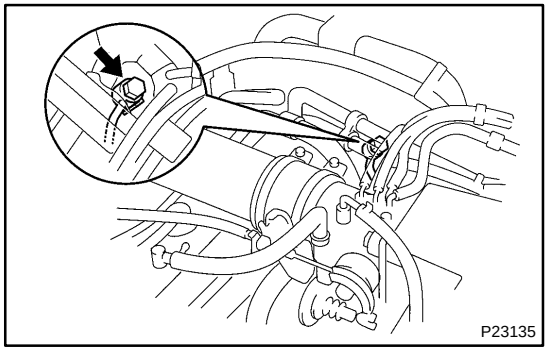

(c) Remove the union bolt and 2 gaskets, and disconnect the fuel inlet pipe from the delivery pipe.

CAUTION:

- **Put a suitable container or shop rag under the delivery pipe.**
- **Slowly loosen the union bolt.**

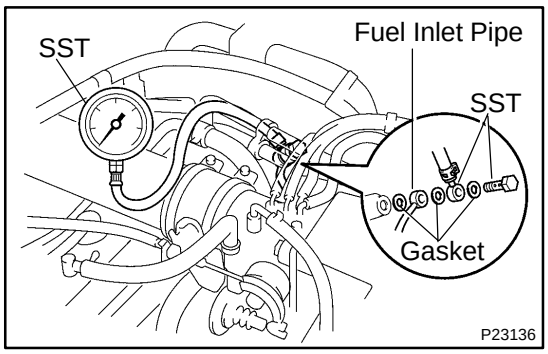

(d) Install the fuel inlet pipe and SST (pressure gauge) to the delivery pipe with the 3 gaskets and SST (union bolt).
SST 09268–45014
Torque: 29 N·m (300 kgf·cm, 22 ft·lbf)

(e) Wipe off any splattered gasoline.

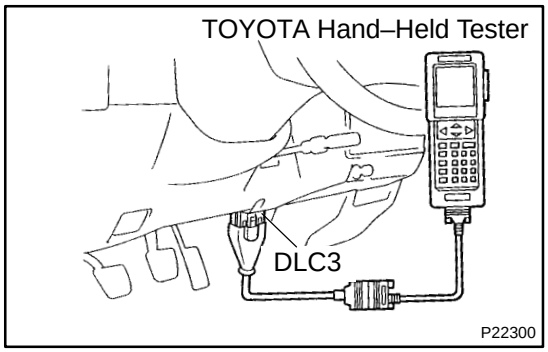

(f) Connect the TOYOTA hand–held tester to the DLC3.

(g) Turn the ignition switch ON and push the TOYOTA hand–held tester main switch ON.

NOTICE:

Do not start the engine.

(h) Select the active test mode on the TOYOTA hand–held tester.

(i) Please refer to the TOYOTA hand–held tester operator's manual for further details.

(j) If you have no TOYOTA hand–held tester, connect the positive (+) and negative (–) leads from the battery to the fuel pump connector.

(k) Reconnect the negative (–) terminal cable to the battery.

(l) Turn the ignition switch ON.

(m) Measure the fuel pressure.
Fuel pressure:
265 – 304 kPa (2.7 – 3.1 kgf/cm^2, 38 – 44 psi)

If pressure is high, replace the fuel pressure regulator.
If pressure is low, check the fuel hoses, fuel hose connections, fuel pump, fuel filter and fuel pressure regulator.

(n) Remove the TOYOTA hand–held tester.

(o) Start the engine.

(p) Measure the fuel pressure at idle.
Fuel pressure:
206 – 255 kPa (2.1 – 2.6 kgf/cm^2, 31 – 37 psi)

If pressure is not as specified, check the vacuum sensing hose and fuel pressure regulator.

(q) Stop the engine.

(r) Check that the fuel pressure remains as specified for 5 minutes after the engine has stopped.
Fuel pressure: 147 kPa (1.5 kgf/cm^2, 21 psi) or more

If pressure is not as specified, check the fuel pump, pressure regulator and/or injector.

(s) After checking fuel pressure, disconnect the negative (–) terminal cable from the battery and carefully remove the SST to prevent gasoline from splashing.
SST 09268–45014

(t) Reconnect the fuel inlet pipe to the delivery pipe with 2 new gaskets and the union bolt.
Torque: 29 N·m (300 kgf·cm, 22 ft·lbf)

(u) Reconnect the negative (–) terminal cable to the battery.
(v) Check for fuel leakage.

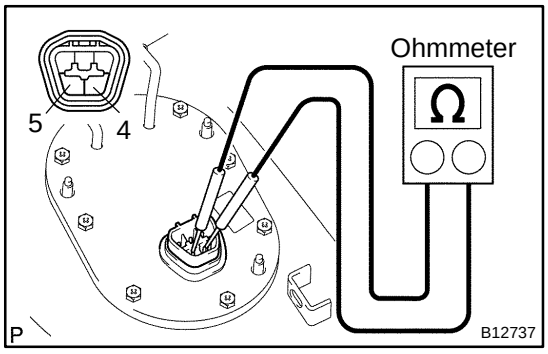

3. INSPECT FUEL PUMP RESISTANCE

Using an ohmmeter, measure the resistance between terminals 4 and 5.

Resistance: 0.2 – 3.0 Ω at 20˚C (68˚F)

If the resistance is not specified, replace the fuel pump and/or lead wire.

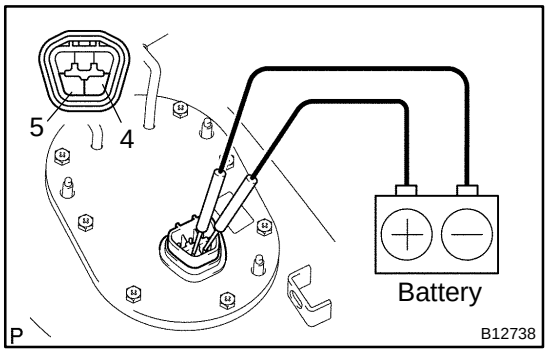

4. INSPECT FUEL PUMP RESISTANCE

Connect the positive (+) lead from the battery to terminal 4 of the connector, and the negative (–) lead to terminal 5. Check that the fuel pump operates.

NOTICE:

- **These tests must be done quickly (within 10 seconds) to prevent the coil from burning out.**
- **Keep the fuel pump as far away from the battery as possible.**
- **Always do switching at the battery side.**

If operation is not as specified, replace the fuel pump and/or lead wire.

SF1O9–02

REMOVAL

CAUTION:
Do not smoke or work near an open frame when working the fuel pump.

1. **REMOVE FUEL TANK (See page SF–23)**
2. **DISCONNECT FUEL MAIN TUBE AND RETURN TUBE FROM FUEL TANK**

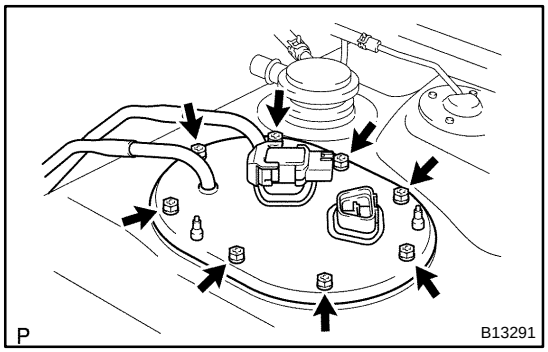

3. **REMOVE FUEL PUMP AND SENDER GAUGE ASSEMBLY FROM FUEL TANK**

(a) Remove the 8 bolts.
(b) Pull out the fuel pump and sender gauge assembly.

NOTICE:
- **Do not damage the fuel pump filter.**
- **Be careful not to bend the arm of the sender gauge.**

(c) Remove the gasket from the fuel section plate.

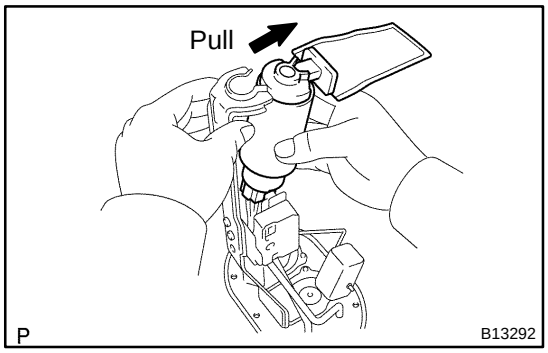

4. **REMOVE FUEL PUMP FROM FUEL PUMP BRACKET**

(a) Disconnect the lead wire from the connecor of the fuel sustion plate.
(b) Pull out the lower side of the fuel pump from the pump bracket.
(c) Disconnect the fuel hose from the fuel pump, and remove the fuel pump.
(d) Remove the rubber cushion from the fuel pump.

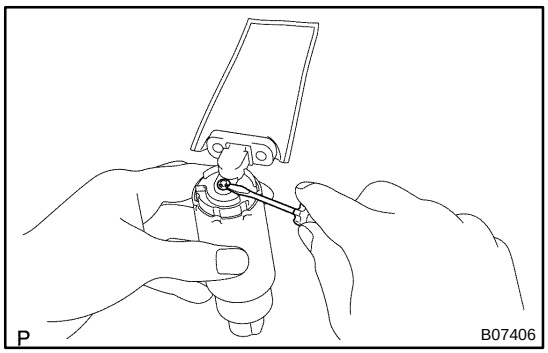

5. **REMOVE FUEL PUMP FILTER FROM FUEL PUMP**

(a) Using a small screwdriver, remove the clip.
(b) Pull out the pump filter.

HEATED OXYGEN SENSOR

COMPONENTS

SF1OC–03

for 2RZ–FE (Bank 1 Sensor 2)

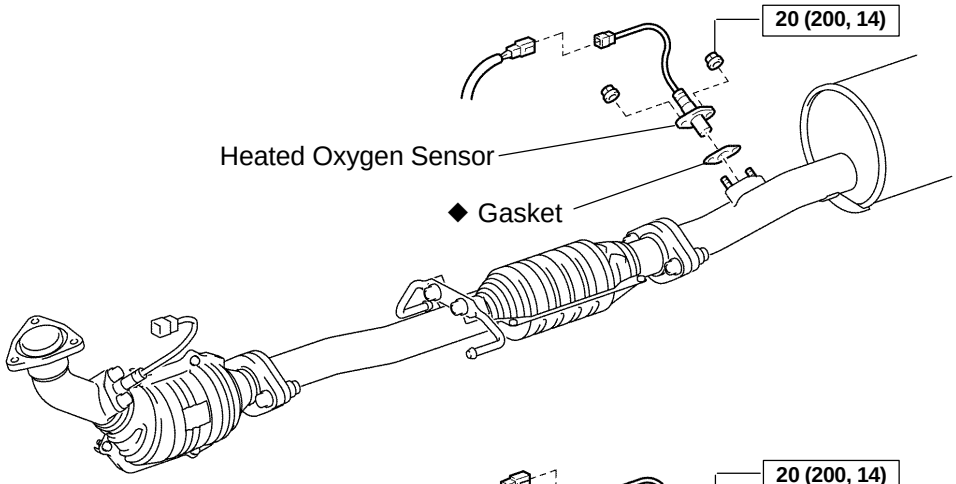

for 3RZ–FE (Bank 1 Sensor 2)

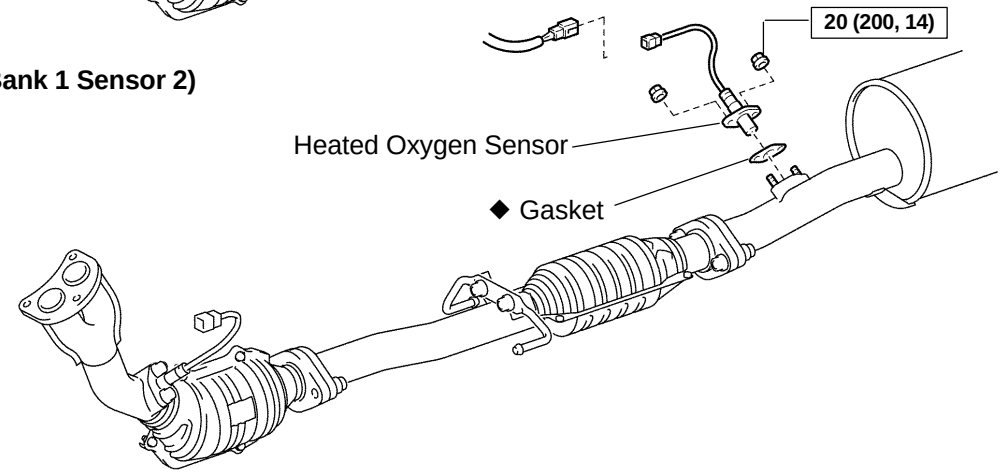

N.m (kgf·cm, ft·lbf) : Specified torque

P ◆ Non–reusable part

B15546

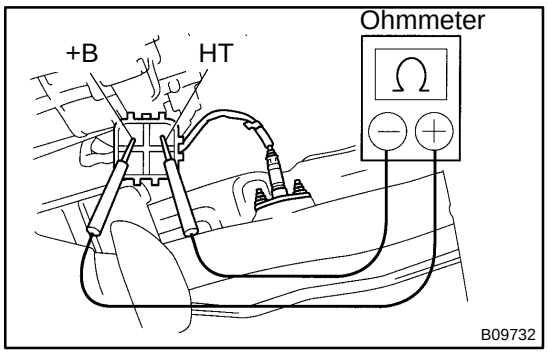

SF17R–03

INSPECTION

1. INSPECT HEATER RESISTANCE OF HEATED OXYGEN SENSOR

(a) Disconnect the sensor connector.

(b) Using an ohmmeter, measure the resistance between terminals +B and HT.

Resistance:

at 20˚C (68˚F)	11 – 16 Ω
at 800˚C (1,472˚F)	23 – 32 Ω

If the resistance is not as specified, replace the sensor.

Torque: 20 N·m (200 kgf·cm, 14 ft·lbf)

(c) Reconnect the oxygen sensor connector.

2. Bank 1 Sensor 2:

INSPECT OPERATION OF HEATED OXYGEN SENSOR (See page DI–64)

SF03N–03

COMPONENTS

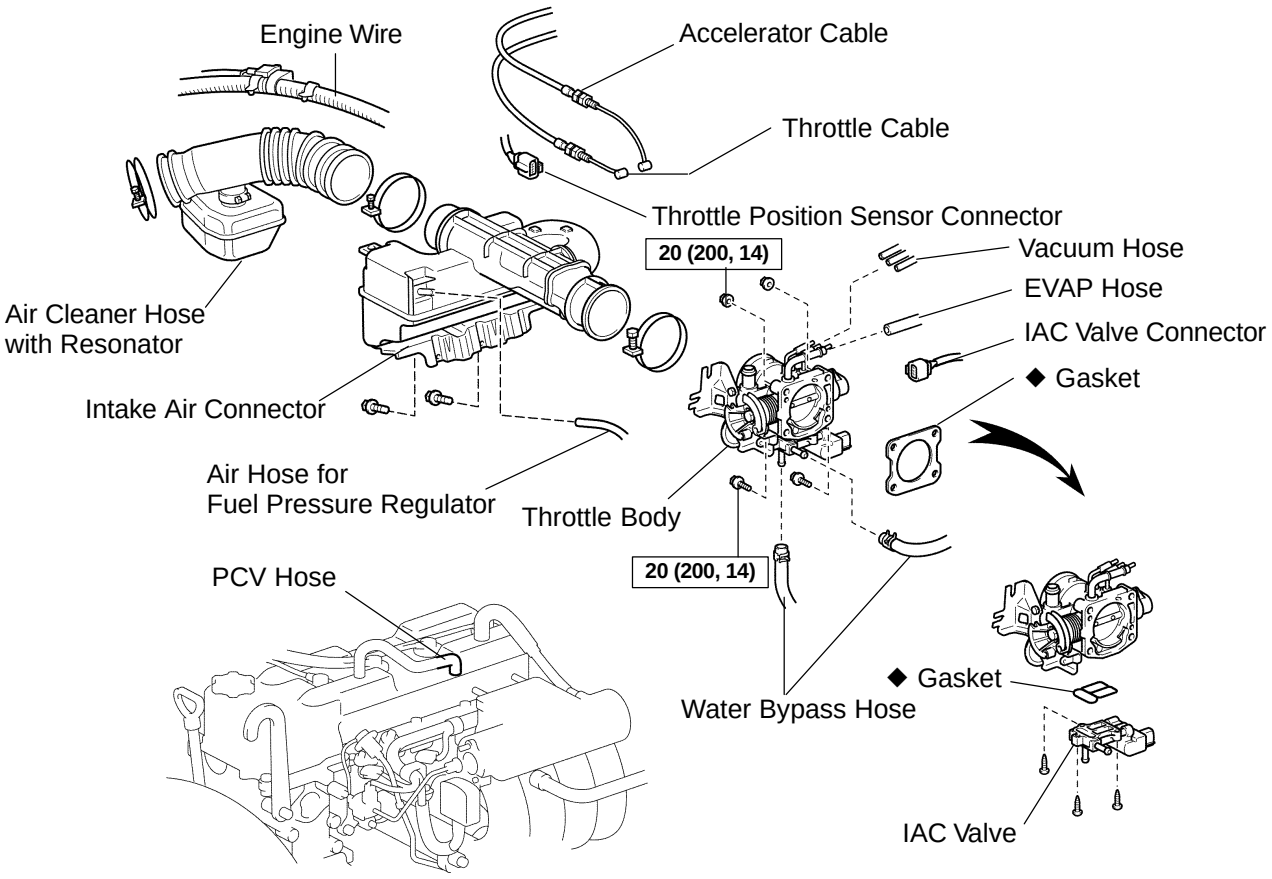

N·m (kgf·cm, ft·lbf) : Specified torque

P ◆ Non–reusable part

B13695

SF1OA–01

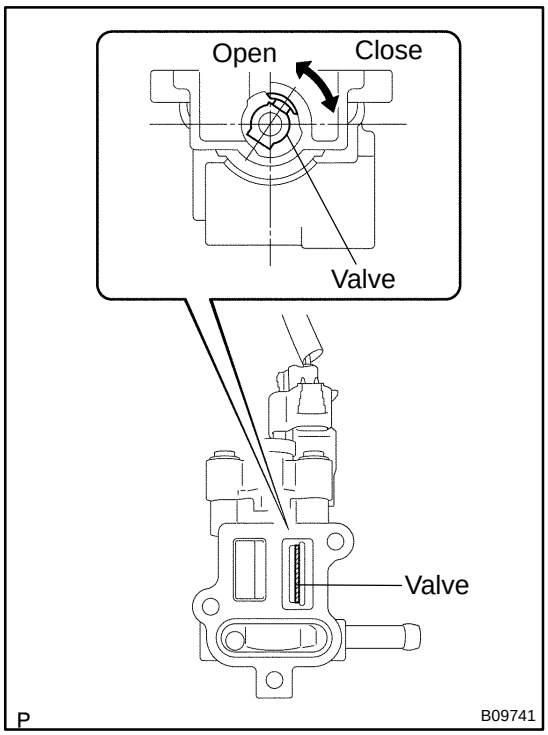

INSPECTION

INSPECT IAC VALVE OPERATION

(a) Check that the IAC valve is halfly opened.
(b) Connect the IAC valve connector to the IAC valve.
(c) Disconnect the ECT sensor connector from the ECT sensor.
(d) Turn the ignition switch ON.
(e) Check that the IAC valve moves.

HINT:

Repeat connecting and disconnecting of IAC valve connector several times and check the operation of the valve.

If operation is not as specified, replace the IAC valve.

(f) Turn the ignition switch OFF.
(g) Reconnect the ECT sensor connector to the ECT sensor.
(h) Disconnect the IAC valve connector from the IAC valve.

SF17K–02

INSTALLATION

Installation is in the reverse order of removal (See page SF–32).

IDLE AIR CONTROL (IAC) VALVE

SF03M–04

ON–VEHICLE INSPECTION

INSPECT IAC VALVE OPERATION

(a) Initial conditions:
- Engine at normal operating temperature
- Idle speed check correctly
- Transmission in neutral position

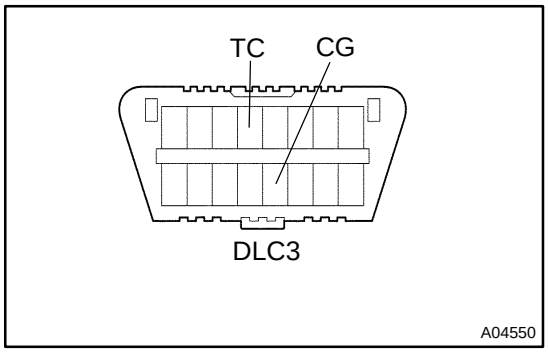

(b) Using SST, connect terminals TC and CG of the DLC3.
SST 09843–18040

(c) After engine speed are kept at 1,000 – 1,500 rpm for 5 seconds, check that they return to idle speed.

If the engine speed operation is not as specified, check the IAC valve, wiring and ECM.

(d) Remove the SST.
SST 09843–18040

SF03O–04

REMOVAL

1. REMOVE THROTTLE BODY (See page SF–30)

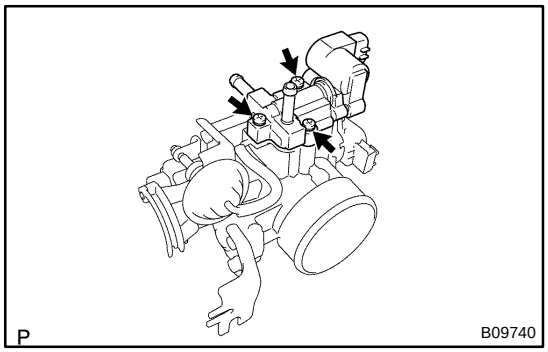

2. REMOVE IAC VALVE

Remove the 3 screws, IAC valve and gasket.

HINT:

At the time of installation, please refer to the following items.

Place a new gasket on the throttle body.

SF037–05

COMPONENTS

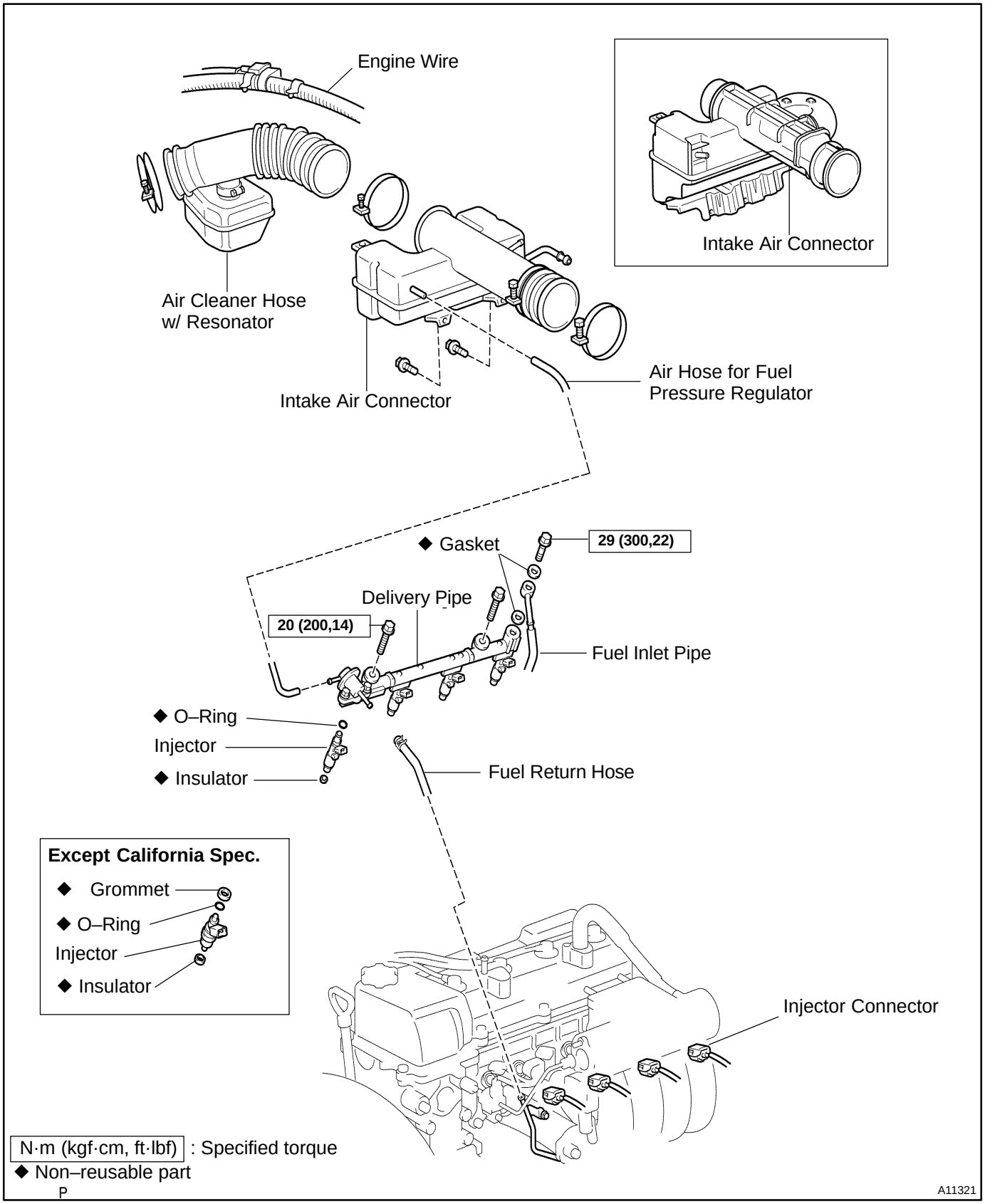

SF039–05

INSPECTION

1. INSPECT INJECTOR INJECTION

CAUTION:

Keep injector clean of sparks during the test.

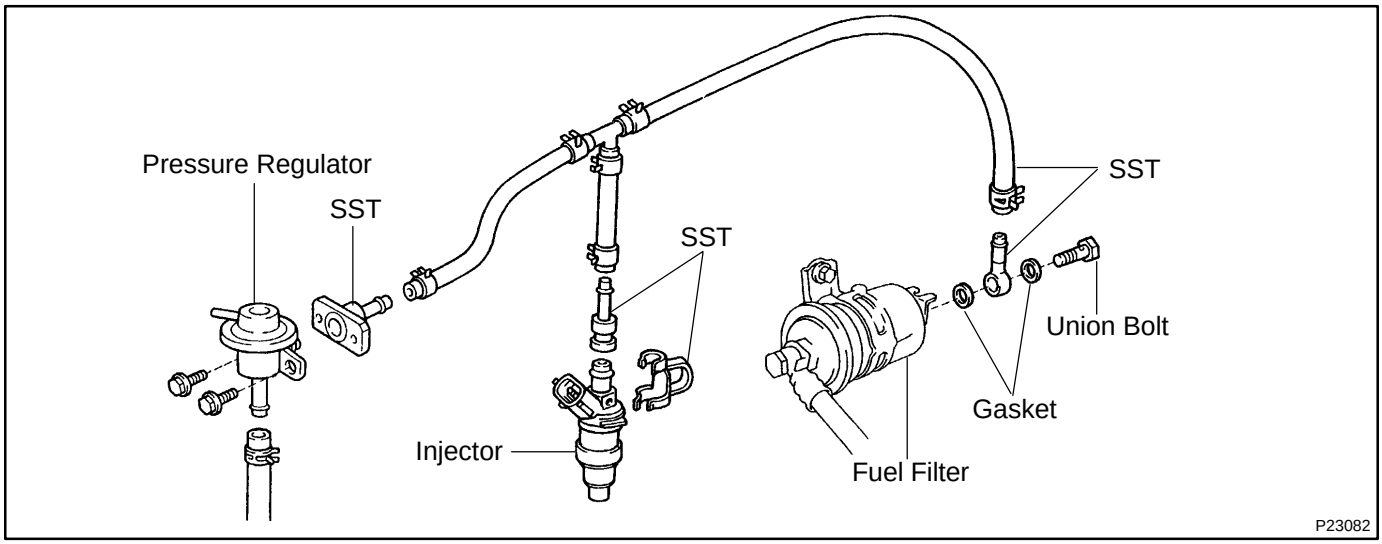

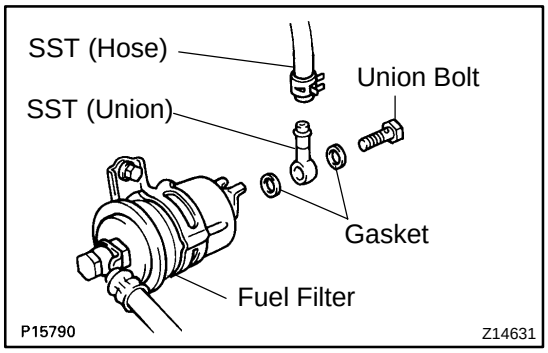

(a) Remove the fuel inlet pipe from the fuel filter outlet.

(b) Connect SST (union and hose) to the fuel filter outlet with the 2 gaskets and union bolt.
SST 09268–41047 (90405–09015)
Torque: 29 N·m (300 kgf·cm, 22 ft·lbf)

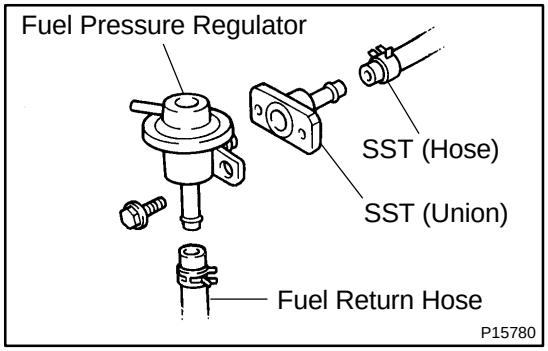

(c) Remove the fuel pressure regulator from the delivery pipe.

(d) Install the O–ring to the fuel inlet of pressure regulator.

(e) Connect SST (hose) to the fuel inlet of the pressure regulator with SST (union) and the 2 bolts.
SST 09268–41047 (09268–41091)

(f) Connect the fuel return hose to the fuel outlet of the pressure regulator.

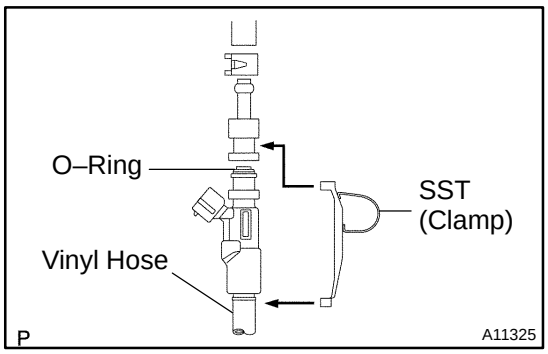

(g) Install the O–ring to the injector.
(h) Connect SST (union and hose) to the injector, and hold the injector and union with SST (clamp).
SST 09268–41047 (09268–41300)
(i) Put the injector into a graduated cylinder.

HINT:
Install a suitable vinyl hose onto the injector to prevent gasoline from splashing out.

(j) Connect the TOYOTA hand–held tester to the DLC3. (See page SF–5)

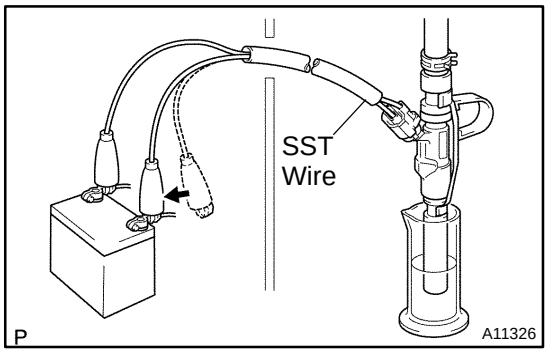

(k) Connect SST (wire) to the injector and battery for 15 seconds, and measure the injection volume with a graduated cylinder. Test each injector 2 or 3 times.
SST 09842–30070
Injection Volume:
71 – 86 cm^3 (4.3 – 5.3 cu in.) per 15 seconds
Difference between each injector:
15 cm^3 (1.0 cu in.) or less

If the injection volume is not as specified, replace the injector.

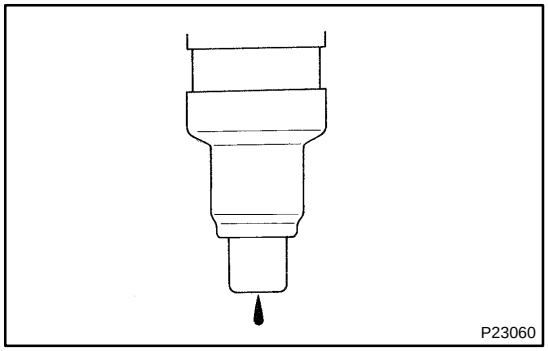

2. INSPECT LEAKAGE

(a) In the condition above, disconnect the test probes of SST (wire) from the battery and check the fuel leakage from the injector.
SST 09842–30070
Fuel drop:
1 drop or less per 12 minutes
(b) Turn the ignition switch OFF.
(c) Disconnect the negative (–) terminal cable from the battery.
(d) Remove the SST.
SST 09268–41047, 09842–30070
(e) Disconnect the TOYOTA hand–held tester.
(f) Reinstall the fuel pressure regulator and fuel inlet pipe.

SF17G–02

INSTALLATION

1. INSTALL INJECTORS TO DELIVERY PIPE

(a) Install a new grommet to each injector.

(b) Apply a light coat of gasoline to the new O–ring and install them to the injector.

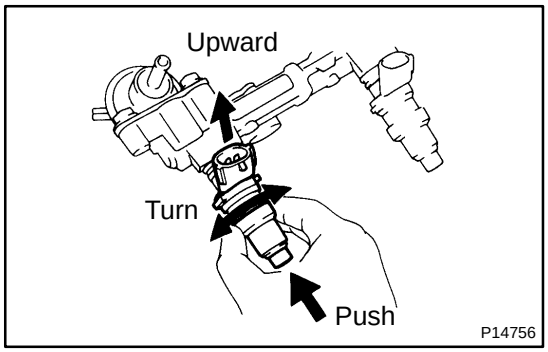

(c) While turning the injector left and right, install it to the delivery pipe. Install the 4 injectors.

(d) Position the injector connector upward.

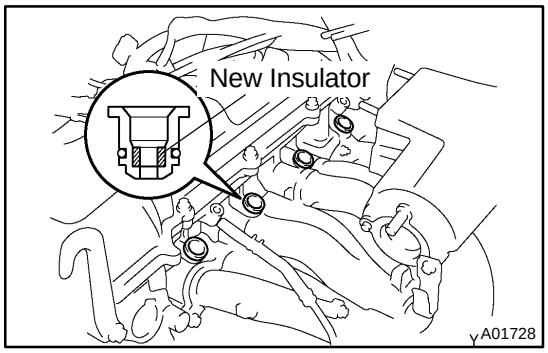

2. INSTALL INJECTORS AND DELIVERY PIPE

(a) Place the 4 new insulators and in position on the spacers.

(b) Place the 4 injectors together with the delivery pipe in position on the cylinder head.

(c) Temporarily install the 2 bolts holding the delivery pipe to the cylinder head.

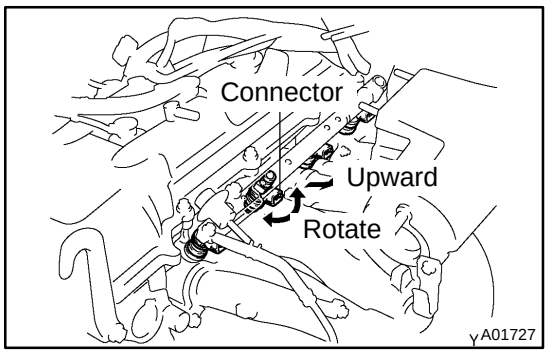

(d) Check that the injectors rotate smoothly.

HINT:

If injectors do not rotate smoothly, the probable cause is incorrect installation of O–rings. Replace the O–rings.

(e) Position the injector connector upward.

(f) Tighten the 2 bolts holding the delivery pipe to the cylinder head.

Torque: 21 N·m (210 kgf·cm, 15 ft·lbf)

(g) Connect the fuel inlet pipe to the delivery pipe with 2 new gaskets and the union bolt.

Torque: 29 N·m (300 kgf·cm, 22 ft·lbf)

(h) Connect the fuel return hose to the fuel pressure regulator.

(i) Connect the vacuum sensing hose to the fuel pressure regulator.

3. CONNECT INJECTOR CONNECTOR

4. INSTALL AIR CLEANER HOSE WITH RESONATOR AND INTAKE AIR CONNECTOR (See page SF–32)

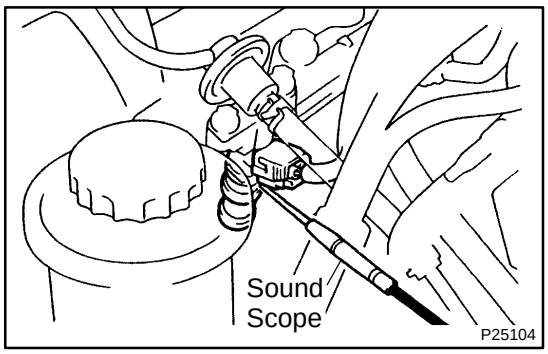

INJECTOR

SF036–02

ON–VEHICLE INSPECTION

1. INSPECT INJECTOR OPERATION

Check operation sound from each injector.

(1) With the engine running or cranking, use a sound scope to check that there is normal operating noise in proportion to engine speed.

(2) If you have no sound scope, you can check the injector transmission operation with your finger.

If no sound or unusual sound is heard, check the wiring connector, injector or injection signal from the ECM.

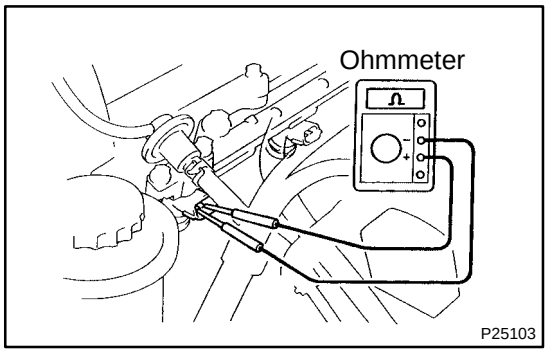

2. INSPECT INJECTOR RESISTANCE

(a) Remove the throttle body (See page SF–30).

(b) Disconnect the injector connectors.

(c) Using an ohmmeter, measure the resistance between the terminals.

Resistance: 12 – 16 Ω at 20˚C (68˚F)

If the resistance is not as specified, replace the injector.

(d) Reconnect the injector connectors.

(e) Reinstall the throttle body (See page SF–32).

SF038–04

REMOVAL

1. REMOVE AIR CLEANER HOSE WITH RESONATOR AND INTAKE AIR CONNECTOR
(See page SF–30)

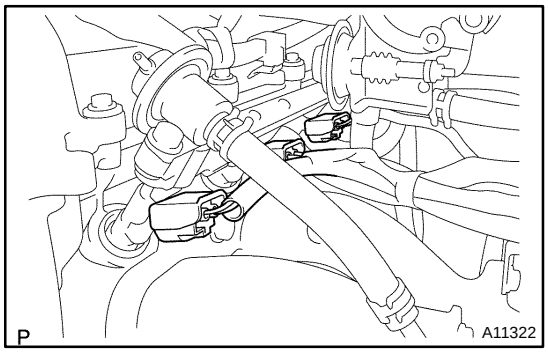

2. DISCONNECT INJECTOR CONNECTOR

Disconnect the 4 injection connectors.

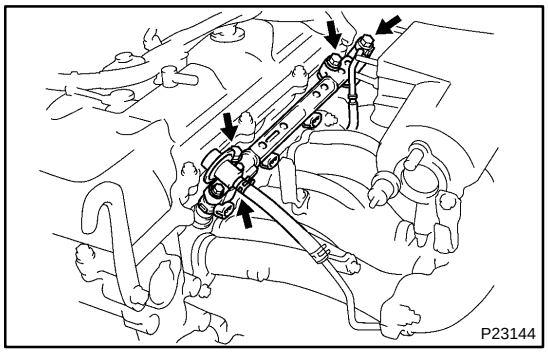

3. REMOVE DELIVERY PIPE AND INJECTORS

(a) Disconnect the vacuum sensing hose from the fuel pressure regulator.

(b) Disconnect the fuel return hose from the fuel pressure regulator.

(c) Remove the union bolt and 2 gaskets, and disconnect the fuel inlet pipe from the delivery pipe.

CAUTION:

- **Put a suitable container or shop rag under the delivery pipe.**
- **Slowly loosen the union bolt.**

(d) Remove the 2 bolts and delivery pipe together with the 4 injectors.

NOTICE:

Be careful not to drop the injectors when removing the delivery pipe.

(e) Remove the 4 insulators and 4 spacers.

(f) Pull out the 4 injectors from the delivery pipe.

(g) Remove the O–ring and grommet from each injector.

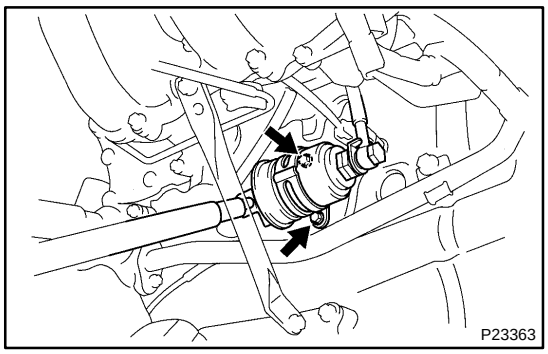

KNOCK SENSOR

SF03Z–02

INSPECTION

1. **REMOVE STARTER (See page ST–4)**
2. **REMOVE FUEL FILTER SET BOLTS**

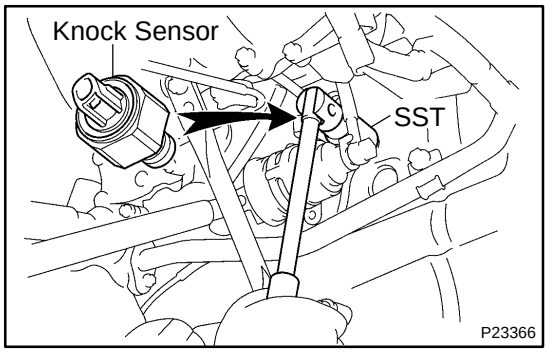

3. **REMOVE KNOCK SENSOR**

(a) Disconnect the knock sensor connector.

(b) Using SST, remove the knock sensor.

SST 09816–30010

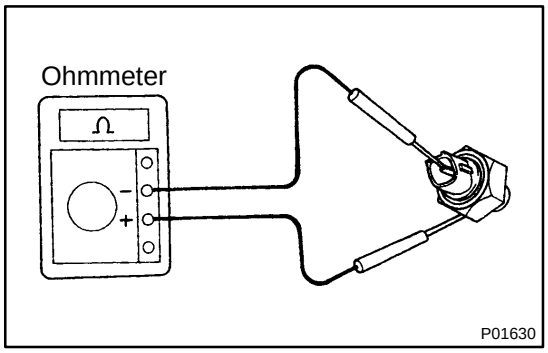

4. **INSPECT KNOCK SENSOR**

Using an ohmmeter, check that there is no continuity between the terminal and body.

If there is continuity, replace the sensor.

5. **REINSTALL KNOCK SENSOR**

(a) Using SST, install the knock sensor.

SST 09816–30010

Torque: 44 N·m (450 kgf·cm, 33 ft·lbf)

(b) Connect the knock sensor connector.

6. **REINSTALL FUEL FILTER SET BOLTS**

Torque: 20 N·m (200 kgf·cm, 14 ft·lbf)

7. **REINSTALL STARTER (See page ST–17)**

MASS AIR FLOW (MAF) METER

SF03D–04

COMPONENTS

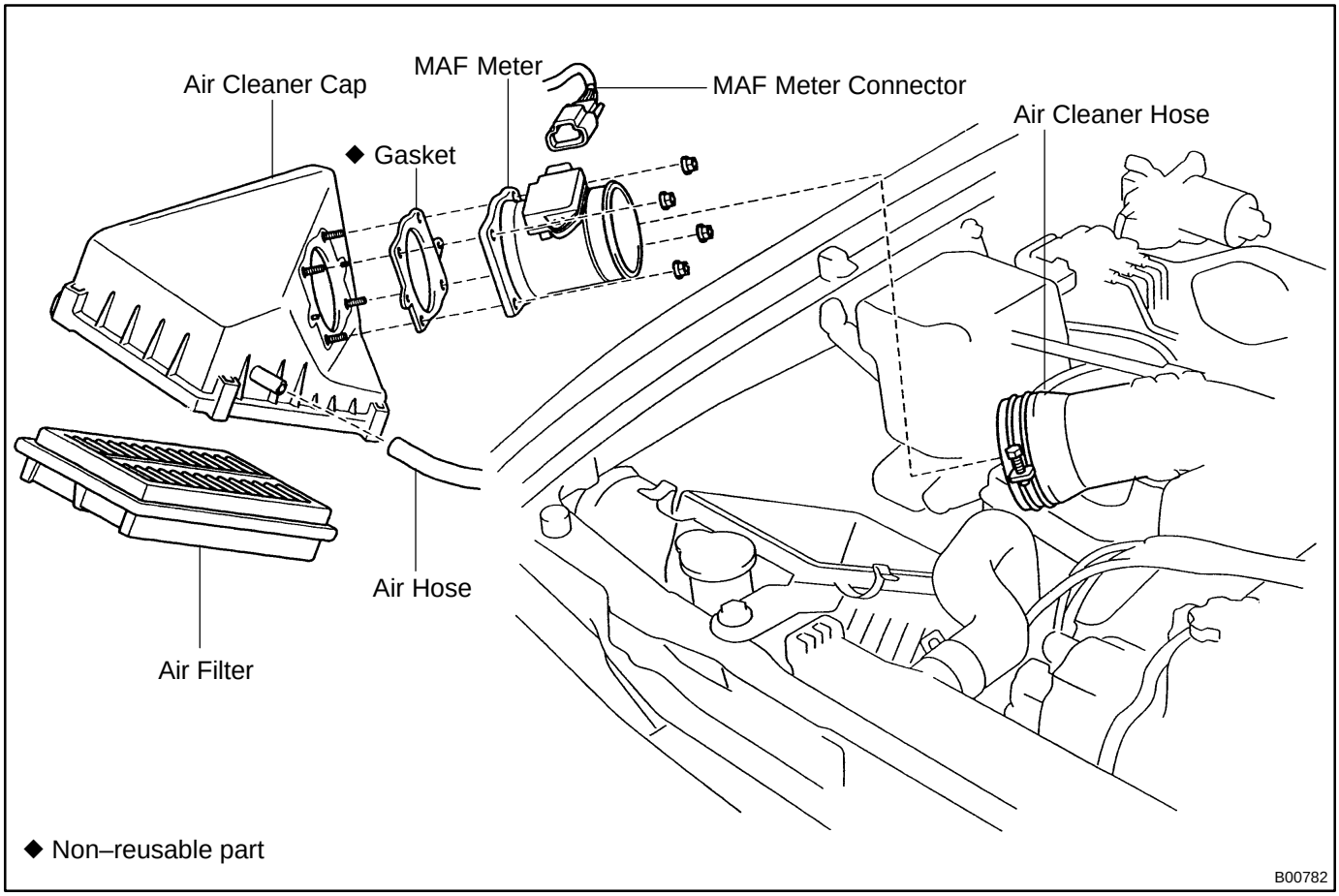

SF03F–02

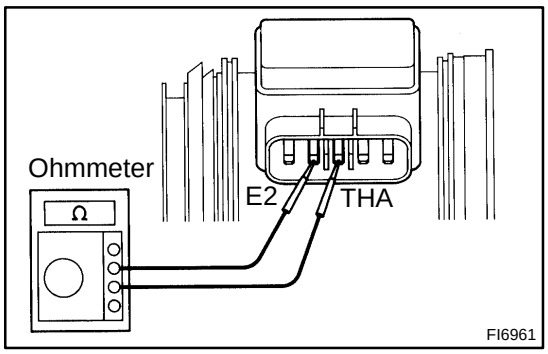

INSPECTION

1. INSPECT MAF METER RESISTANCE

Using an ohmmeter, measure the resistance between terminals THA and E3.

Temperature	Resistance
–20˚C (–4˚F)	10 – 20 kΩ
0˚C (32˚F)	4 – 7 kΩ
20˚C (68˚F)	2 – 3 kΩ
40˚C (104˚F)	0.9 – 1.3 kΩ
60˚C (140˚F)	0.4 – 0.7 kΩ
80˚C (176˚F)	0.2 – 0.4 kΩ

If the resistance is not as specified, replace the MAF meter.

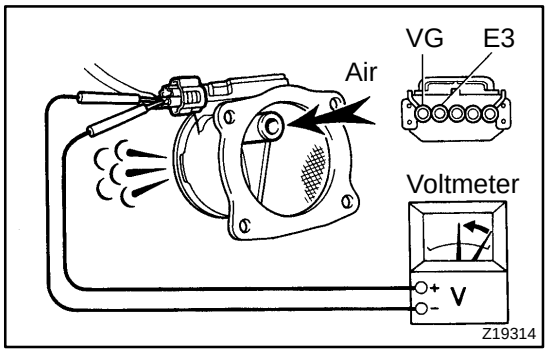

2. INSPECT MAF METER OPERATION

(a) Connect the negative (–) terminal cable to the battery.
(b) Turn the ignition switch ON.
(c) Connect the MAF meter connector.
(d) Using a voltmeter, connect the positive (+) tester probe to terminal VG, and negative (–) tester probe to terminal E3.
(e) Blow air into the MAF meter, and check that the voltage fluctuates.

If operation is not as specified, replace the MAF meter.

(f) Turn the ignition switch OFF.
(g) Disconnect the negative (–) terminal cable from the battery.
(h) Disconnect the MAF meter connector.

SF03G–02

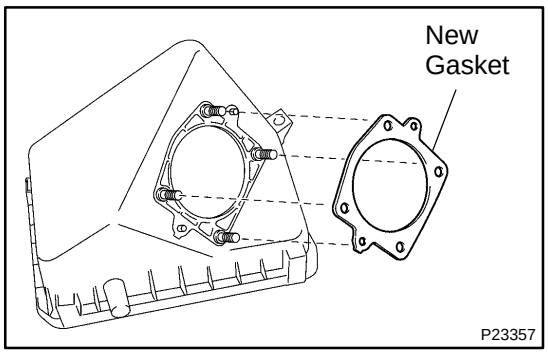

INSTALLATION

1. INSTALL MAF METER TO AIR CLEANER CAP

(a) Place a new gasket on the air cleaner cap.

(b) Install the MAF meter with the 4 nuts.

Torque: 8.5 N·m (85 kgf·cm, 74 in.·lbf)

2. INSTALL MAF METER WITH AIR CLEANER CAP

SF03E–02

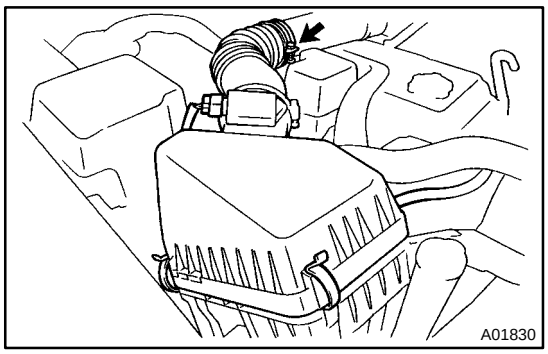

REMOVAL

1. REMOVE AIR CLEANER CAP WITH MAF METER

(a) Disconnect the MAF meter connector and wire clamp.
(b) Loosen the air cleaner hose clamp.
(c) Disconnect the air hose from air cleaner cap.
(d) Loosen the 4 clips, and remove the air cleaner cap together with the MAF meter.

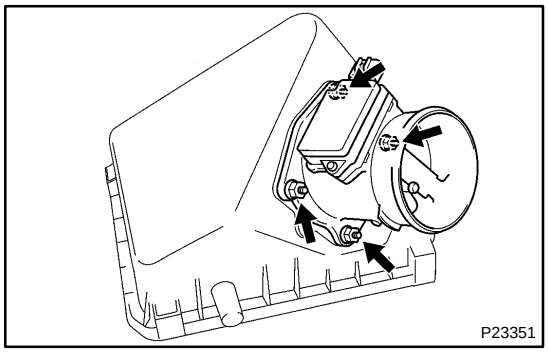

2. REMOVE MAF METER FROM AIR CLEANER CAP

Remove the 4 nuts, MAF meter and gasket.

SFI SYSTEM

SF1O8–03

PRECAUTION

1. BEFORE WORKING ON FUEL SYSTEM, DISCONNECT NEGATIVE (–) TERMINAL CABLE FROM BATTERY

HINT:

Any diagnostic trouble code retained by the ECM will be erased when the battery negative (–) terminal cable is removed from the battery.

Therefore, if necessary, read the diagnostic trouble code(s) before removing the negative (–) terminal cable from the battery.

2. DO NOT SMOKE OR WORK NEAR AN OPEN FLAME WHEN WORKING ON FUEL SYSTEM

3. KEEP GASOLINE AWAY FROM RUBBER OR LEATHER PARTS

4. MAINTENANCE PRECAUTIONS

(a) Precaution when the connecting gauge.
Use battery as the power source for the timing light, etc.

(b) In the event of engine misfire, these precautions should be taken.
  (1) Check proper connection of battery terminals, etc.
  (2) After repair work, check that the ignition coil terminals and all other ignition system lines are reconnected securely.
  (3) When cleaning the engine compartment, be especially careful to protect the electrical system from water.

(c) Precautions when the handling heated oxygen sensors.
  (1) Do not allow oxygen sensor to drop or hit against an object.
  (2) Do not allow the sensor to come into contact with water.

5. IF VEHICLE IS EQUIPPED WITH MOBILE RADIO SYSTEM (HAM, CB, ETC.)

If the vehicle is equipped with a mobile communication system, refer to the precaution in the IN section.

6. AIR INDUCTION SYSTEM

(a) Separation of the engine oil dipstick, oil filler cap, PCV hose, etc. may cause the engine to run out of tune.

(b) Disconnection, looseness or cracks in the parts of the air induction system between the throttle body and cylinder head will cause air suction and cause the engine to run out of tune.

7. ELECTRONIC CONTROL SYSTEM

(a) Before removing SFI wiring connectors, terminals, etc., first disconnect the power by either turning the ignition switch to LOCK or disconnecting the negative (–) terminal cable from the battery.

HINT:
Always check the diagnostic trouble code before disconnecting the negative (–) terminal cable from the battery.

(b) When installing the battery, be especially careful not to incorrectly connect the positive (+) and negative (–) cables.
(c) Do not permit parts to receive a severe impact during removal or installation. Handle all SFI parts carefully, especially the ECM.
(d) Do not be careless during troubleshooting as there are numerous transistor circuits and even slight terminal contact can further troubles.
(e) Do not open the ECM cover.
(f) When inspecting during rainy weather, take care to prevent entry of water. Also, when washing the engine compartment, prevent water from getting on the SFI parts and wiring connectors.
(g) Parts should be replaced as an assembly.
(h) Care should be taken when pulling out and inserting wiring connectors.
    (1) Release the lock and pull out the connector, pulling on the connectors.
    (2) Fully insert the connector and check that it is locked.

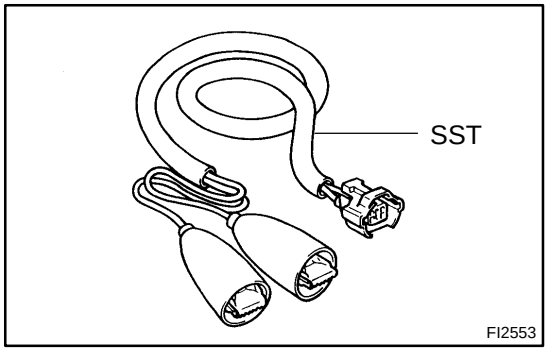

(i) Use SST for inspection or test of the injector or its wiring connector.
SST 09842–30070

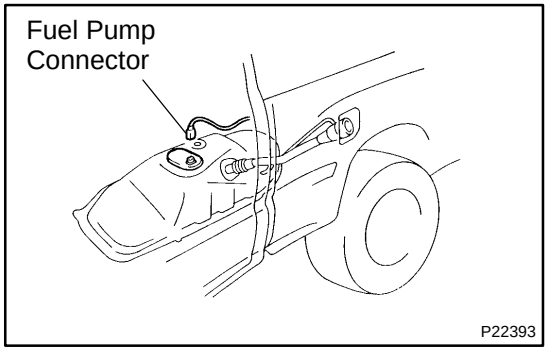

8. FUEL SYSTEM

(a) When disconnecting the high fuel pressure line, a large amount of gasoline will spill out, so observe these procedures:
    (1) Disconnect the fuel pump connector.
    (2) Start the engine. After the engine has stopped on its own, turn the ignition switch OFF.
    (3) Put a container under the connection.
    (4) Slowly loosen the connection.
    (5) Disconnect the connection.

(6) Plug the connection with a rubber plug.

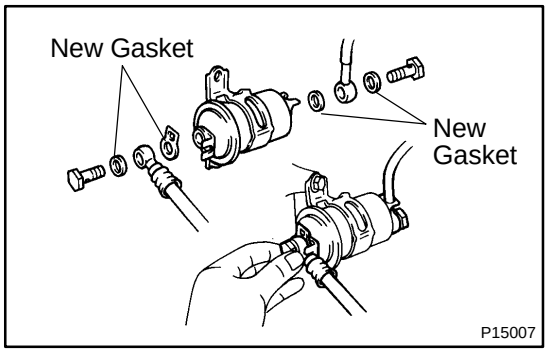

(b) When connecting the union bolt on the high pressure pipe union, observe these procedures:
(1) Always use a new gasket.
(2) Tighten the union bolt by hand.
(3) Tighten the union bolt to the specified torque.
Torque: 29 N·m (300 kgf·cm, 22 ft·lbf)

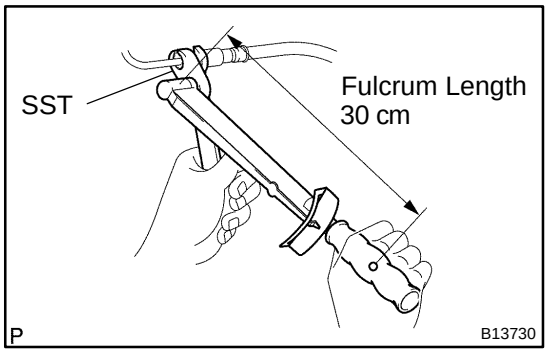

(c) When connecting the flare nut on the high pressure pipe union, observe these procedures:
(1) Apply a light coat of engine oil to the flare and tighten the flare nut by hand.
(2) Using SST, tighten the flare nut to the specified torque.
SST 09023–38400
Torque: 26 N·m (262 kgf·cm, 19 ft·lbf)

HINT:
Use a torque wrench with a fulcrum length of 30 cm (11.81 in.).

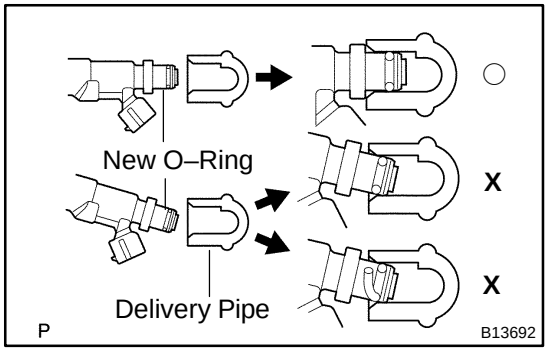

(d) Observe these precautions when removing and installing the injectors.
(1) Never reuse the O–ring.
(2) When placing a new O–ring on the injector, take care not to damage it in any way.
(3) Coat a new O–ring with spindle oil or gasoline before installing–never use engine, gear or brake oil.

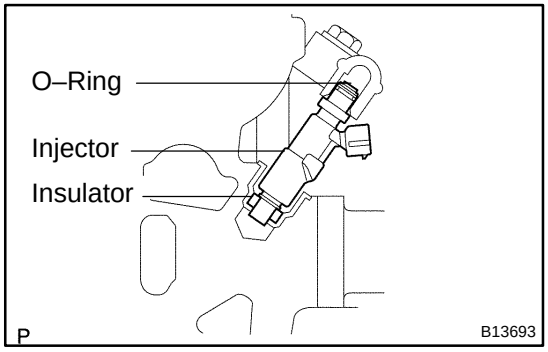

(e) Install the injector to the delivery pipe and cylinder head as shown in the illustration.

NOTICE:
Before installing the injector, must apply spindle oil or gasoline on the place where the delivery pipe or cylinder head touches an O–ring of the injector.

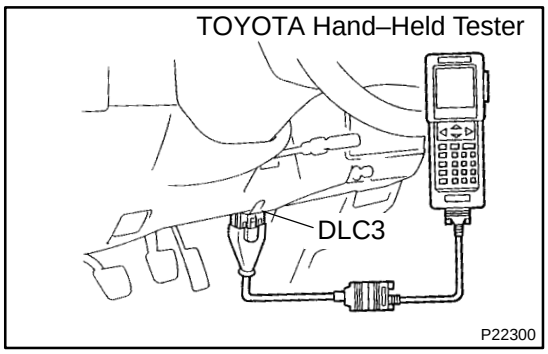

(f) Check that there are no fuel leaks after doing maintenance anywhere on the fuel system.

(1) Connect the TOYOTA hand–held tester to the DLC3.

(2) Turn ignition switch ON and push the TOYOTA hand–held tester main switch ON.

NOTICE:

Do not start the engine.

(3) Select the active test mode on the TOYOTA hand–held tester.

(4) Please refer to the TOYOTA hand–held tester operator's manual for further details.

(5) If you have no TOYOTA hand–held tester, connect the positive (+) and negative (–) leads from the battery to the fuel pump connector (See page SF–18).

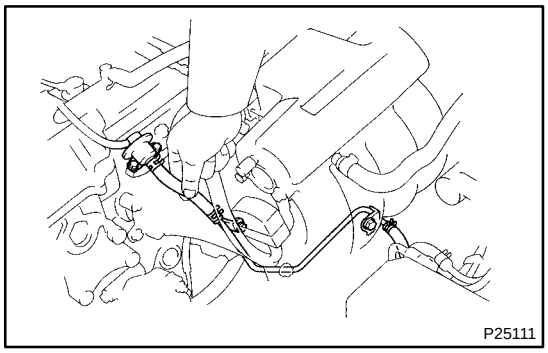

(6) Pinch the fuel return hose. The pressure in high pressure line will rise to approx. 400 kPa (4 kgf/cm^2, 57 psi). In this state, check to see that there are no leaks from any part of the fuel system.

NOTICE:

Always pinch the hose. Avoid bending as it may cause to hose to crack.

(7) Turn the ignition switch OFF.

(8) Disconnect the TOYOTA hand–held tester from the DLC3.

SF03I–03

COMPONENTS

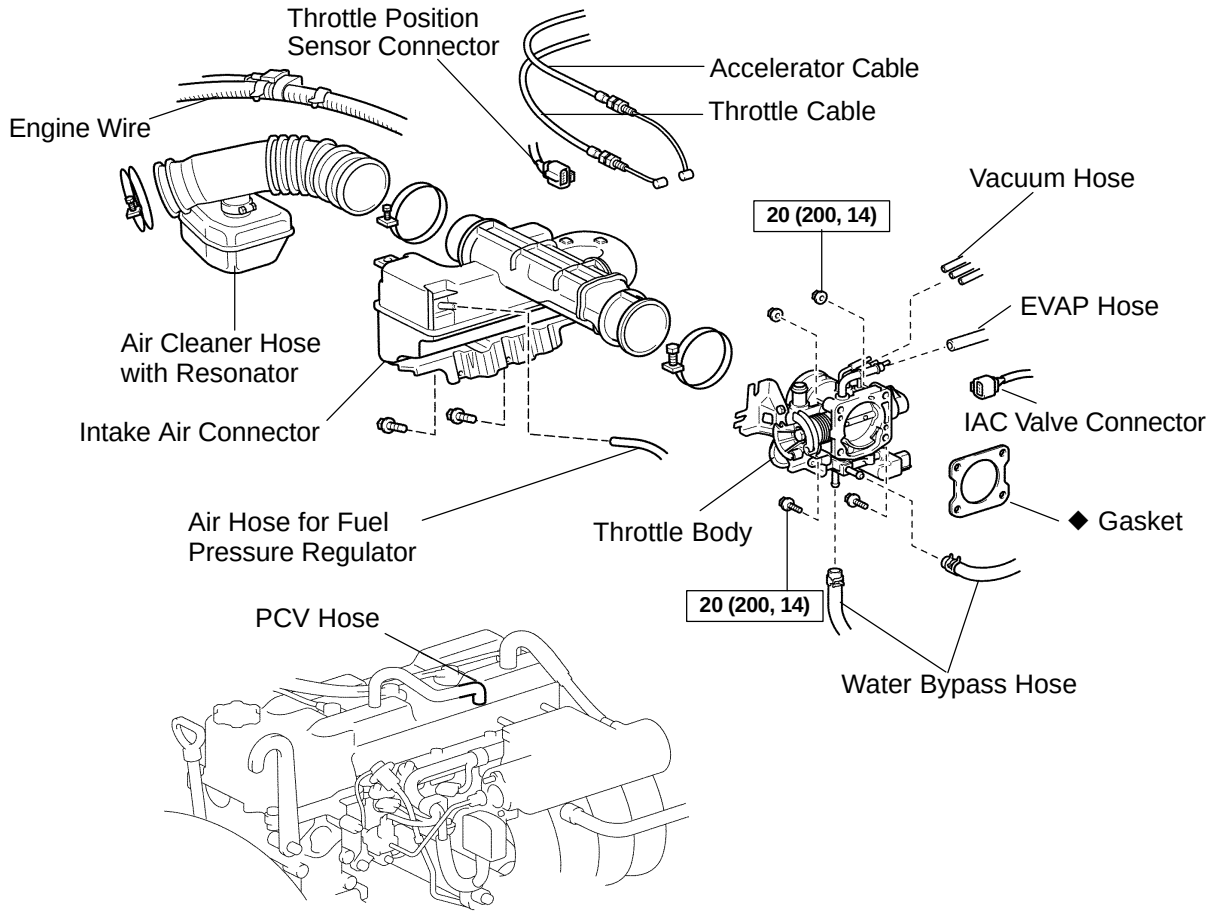

N·m (kgf·cm, ft·lbf) : Specified torque
◆ Non–reusable part

P

B13694

SF03K–02

INSPECTION

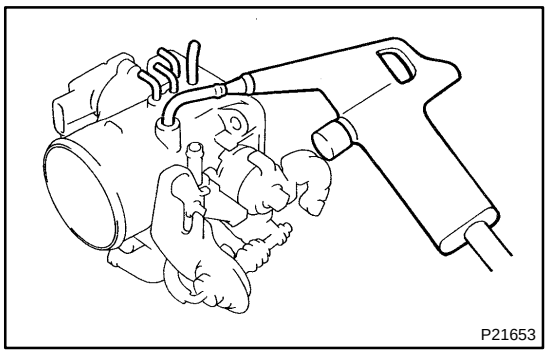

1. CLEAN THROTTLE BODY

(a) Using a soft brush and carburetor cleaner, clean the cast parts.

(b) Using compressed air, clean all the passages and apertures.

NOTICE:

To prevent deterioration, do not clean the throttle position sensor and IAC valve.

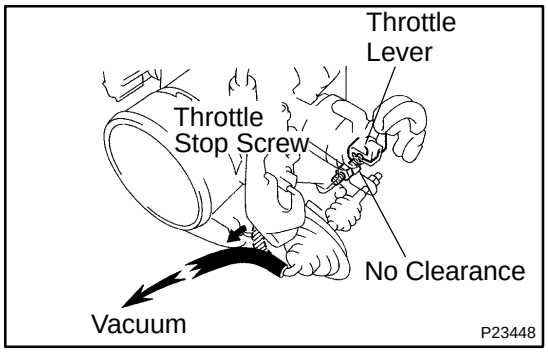

2. INSPECT THROTTLE VALVE

(a) Apply vacuum to the throttle opener.

(b) Check that there is no clearance between the throttle stop screw and throttle lever when the closed throttle position.

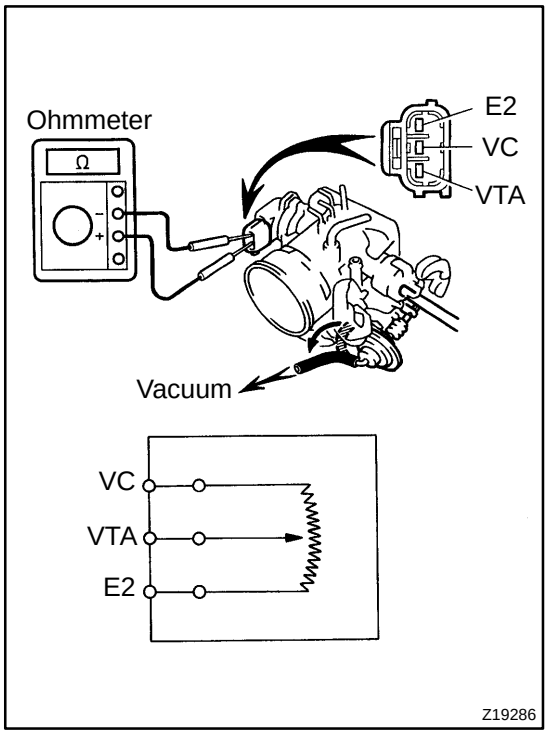

3. INSPECT THROTTLE POSITION SENSOR

(a) Apply vacuum to the throttle opener.

(b) Insert a thickness gauge between the throttle stop screw and stop lever.

(c) Using an ohmmeter, measure the resistance between each terminal.

Clearance between lever and stop screw	Between terminals	Resistance
0 mm (0 in.)	VTA – E2	0.2 – 5.7 kΩ
Throttle valve fully open	VTA – E2	2.0 – 10.2 kΩ
–	VC – E2	2.5 – 5.9 kΩ

SF17I–02

INSTALLATION

Installation is in the reverse order of removal (See page SF–30).

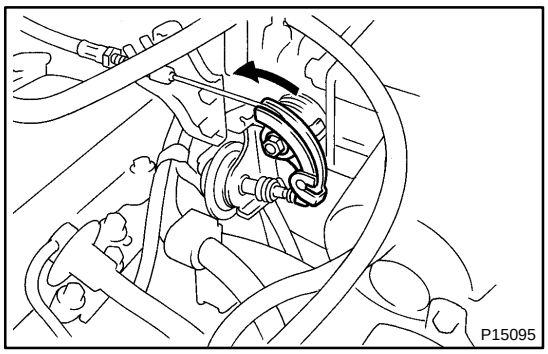

THROTTLE BODY

SF03H–03

ON–VEHICLE INSPECTION

1. INSPECT THROTTLE BODY

(a) Check that the throttle linkage moves smoothly.

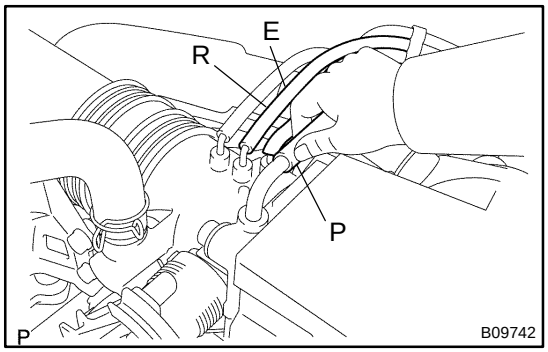

(b) Check the vacuum at each port.
- Start the engine.
- Check the vacuum with your finger.

Port name	At idle	At 3,500 rpm
P	Vacuum	Vacuum
E	No vacuum	Vacuum
R	No vacuum	Vacuum

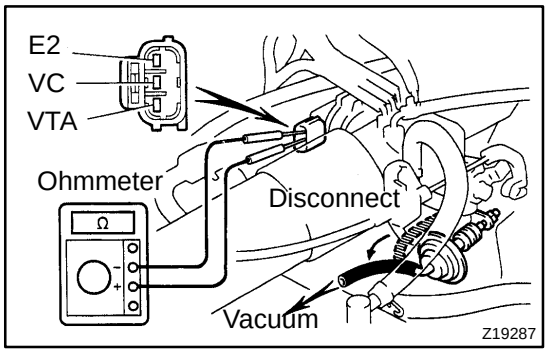

2. INSPECT THROTTLE POSITION SENSOR

(a) Disconnect the sensor connector.

(b) Apply vacuum to the throttle opener.

(c) Using an ohmmeter, measure the resistance between each terminal.

Throttle valve condition	Between terminals	Resistance
Fully closed	VTA – E2	0.2 – 5.7 kΩ
Fully open	VTA – E2	2.0 – 10.2 kΩ
–	VC – E2	2.5 – 5.9 kΩ

(d) Reconnect the sensor connector.

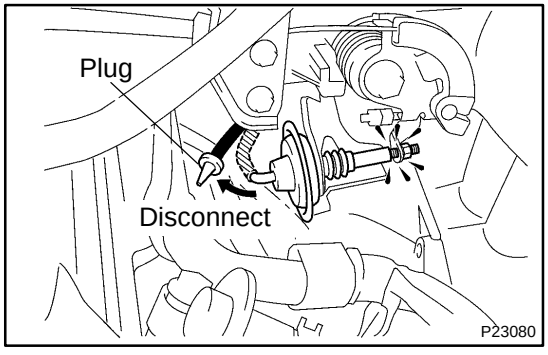

3. INSPECT THROTTLE OPENER

(a) Allow the engine to warm up to normal operating temperature.

(b) Check the idle speed.
Idle speed: 650 – 750 rpm

(c) Disconnect the vacuum hose from the throttle opener, and plug the hose end.

(d) Check the throttle opener setting speed.
Throttle opener setting speed: 1,200 – 1,500 rpm

If the throttle opener setting is not as specified, replace the throttle body.

(e) Stop the engine.

(f) Reconnect the vacuum hose to the throttle opener.

(g) Start the engine, and check that the idle speed returns to the correct speed.

(h) Disconnect TOYOTA hand–held tester or OBDII scan tool.

SF17H–02

REMOVAL

1. **DRAIN ENGINE COOLANT**
2. **DISCONNECT ACCELERATOR CABLE FROM THROTTLE BODY**
3. **A/T:**
   DISCONNECT THROTTLE CABLE FROM THROTTLE BODY

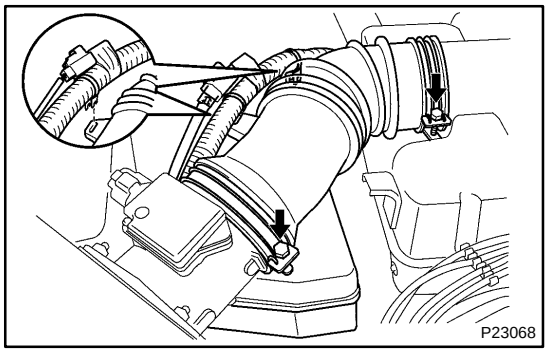

4. **REMOVE AIR CLEANER HOSE WITH RESONATOR**

(a) Disconnect the 2 wire clamps from the air cleaner hose.

(b) Loosen the air cleaner hose clamps, remove the air cleaner together with the resonator.

5. **REMOVE INTAKE AIR CONNECTOR**
   (See page EM–34)

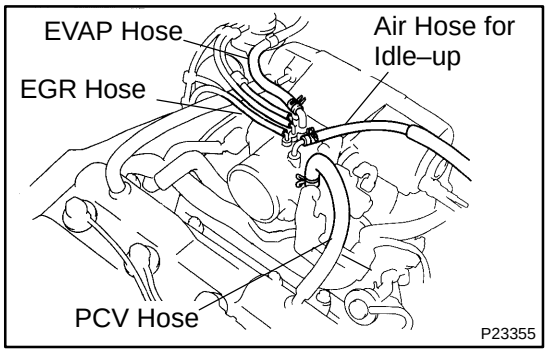

6. **REMOVE THROTTLE BODY**

(a) Disconnect the PCV hose and EVAP hose.

(b) w/ PS:
Disconnect the air hose for PS idle–up.

(c) Disconnect the throttle position sensor connector.

(d) Disconnect the IAC valve connector.

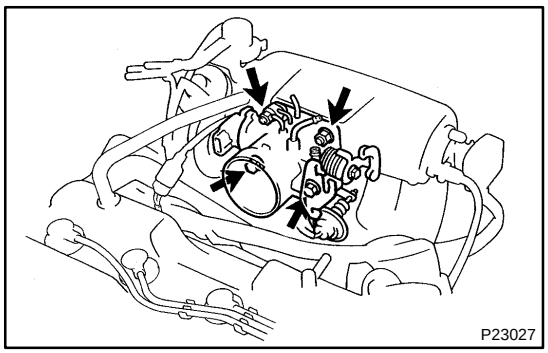

(e) Remove the 2 bolts and 2 nuts, and disconnect the throttle body from the air intake chamber.
Torque: 20 N·m (200 kgf·cm, 14 ft·lbf)

HINT:
At the time of installation, please refer to the following items.
Use a new gasket.

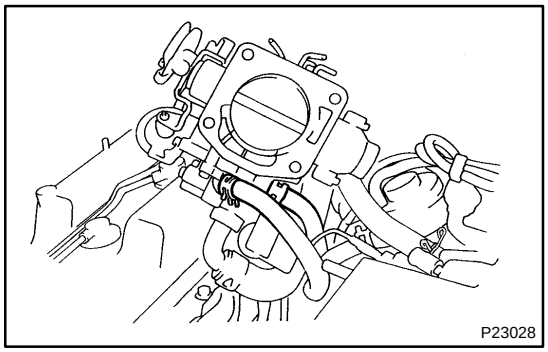

(f) Disconnect the water bypass hoses from the throttle body, and remove the throttle body.

(g) Remove the throttle body gasket.

VSV FOR CANISTER CLOSED VALVE (CCV)

SF1TE–01

INSPECTION

1. REMOVE VSV (See page SF–48)

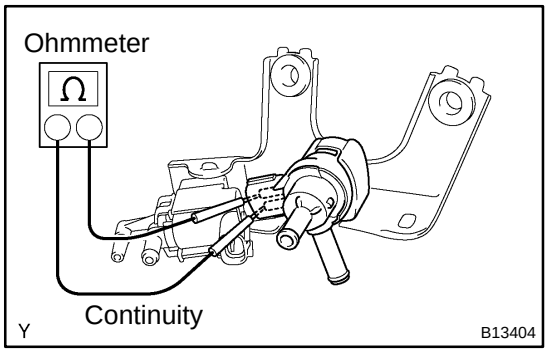

2. INSPECT VSV FOR OPEN CIRCUIT

Using an ohmmeter, check that there is continuity between the terminals.

Resistance:

At 20˚C (68˚F)	25 – 30 Ω
At 120˚C (248˚F)	33 – 42 Ω

If there is no continuity, replace the VSV.

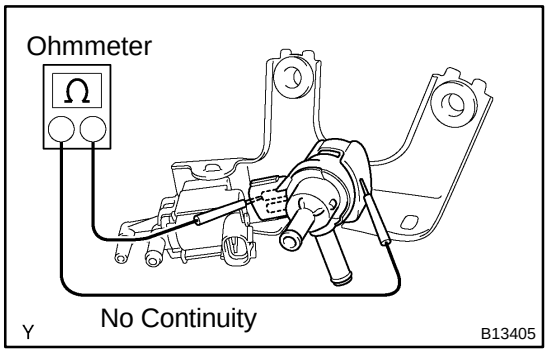

3. INSPECT VSV FOR GROUND

Using an ohmmeter, check that there is no continuity between each terminal and the body.

If there is continuity, replace the VSV.

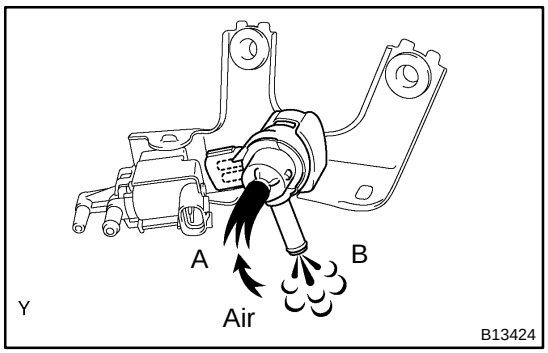

4. INSPECT VSV OPERATION

(a) Check that air flows from ports A to B.

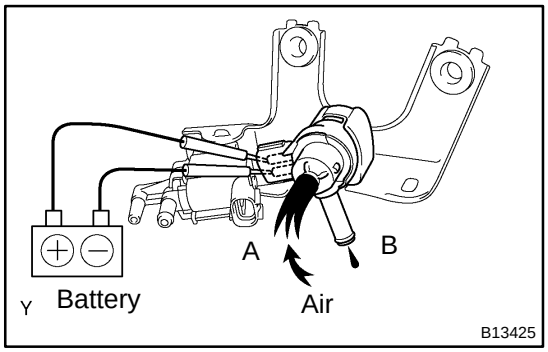

(b) Apply battery positive voltage across the terminals.

(c) Check that air does not flow from ports A to B.

If operation is not as specified, replace the VSV.

5. REINSTALL VSV

VSV FOR EVAPORATIVE EMISSION (EVAP)

COMPONENTS

SF1TC–01

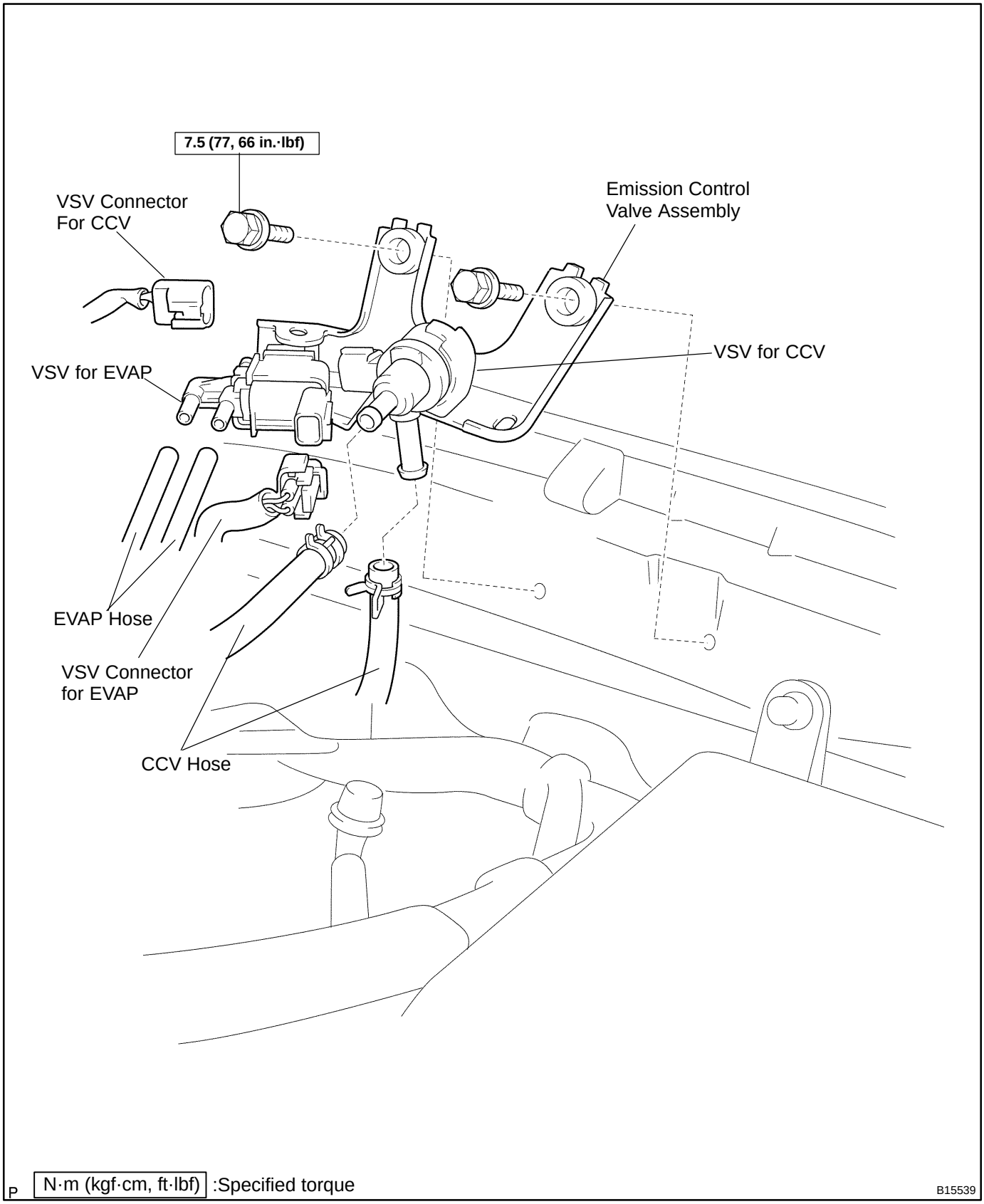

SF1TD–01

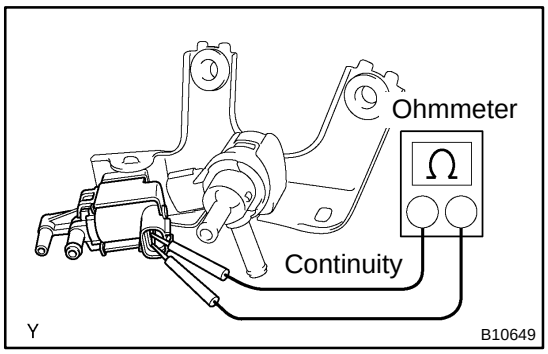

INSPECTION

1. REMOVE VSV

2. INSPECT VSV

(a) Inspect the VSV for open circuit.

Using an ohmmeter, check that there is continuity between the terminals.

Resistance: 30 – 34 Ω at 20˚C (68˚F)

If there is no continuity, replace the VSV.

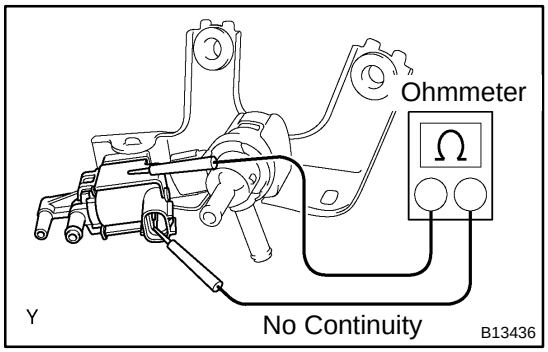

(b) Inspect VSV for ground.

Using an ohmmeter, check that there is no continuity between each terminal and the body.

If there is continuity, replace the VSV.

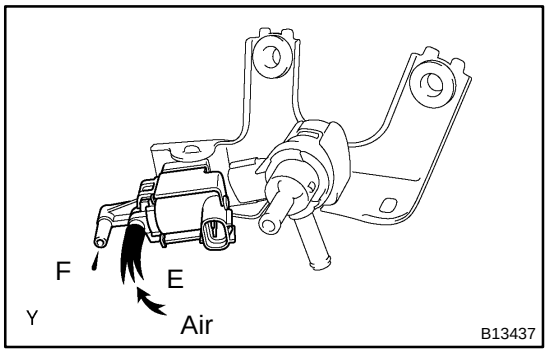

(c) Inspect the VSV opration.

(1) Check that air does not flow from port E to port F.

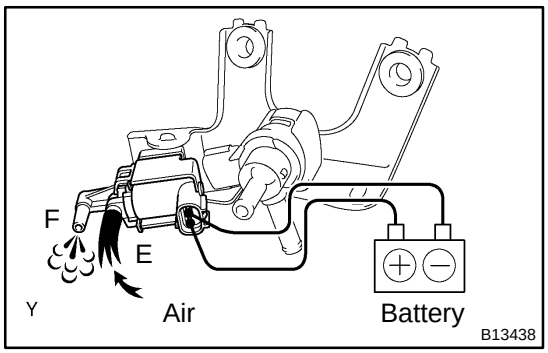

(2) Apply battery positive voltage across the terminals.

(3) Check that air flows from port E to port F.

If operation is not as specified, replace the VSV.

3. REINSTALL VSV

4. REMOVE VSV

(a) Disconnect the connector and 2 EVAP hoses.

(b) Remove the screw and VSV.

VSV FOR EXHAUST GAS RECIRCULATION (EGR) (3RZ–FE)

SF1TK–01

INSPECTION

1. REMOVE VSV

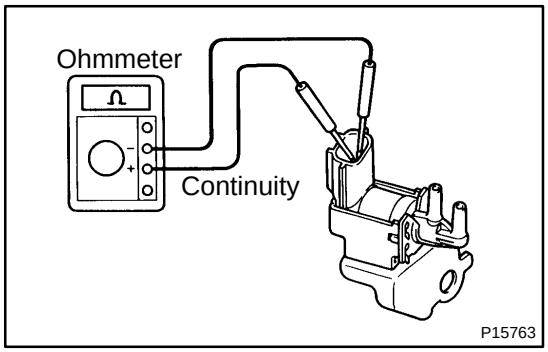

2. INSPECT VSV

(a) Inspect the VSV for open circuit.

Using an ohmmeter, check that there is continuity between terminals.

Resistance: 33 – 39 Ω at 20˚C (68˚F)

If there is no continuity, replace the VSV.

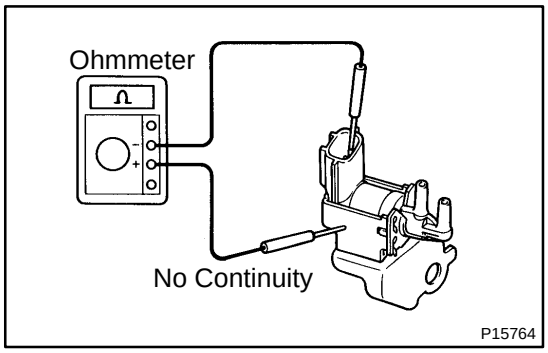

(b) Inspect the VSV for ground.

Using an ohmmeter, check that there is no continuity between each terminal and the body.

If there is continuity, replace the VSV.

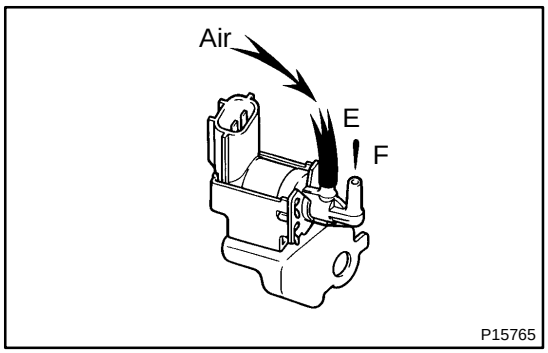

(c) Inspect the VSV operation.

(1) Check that air does not flow from ports E to F.

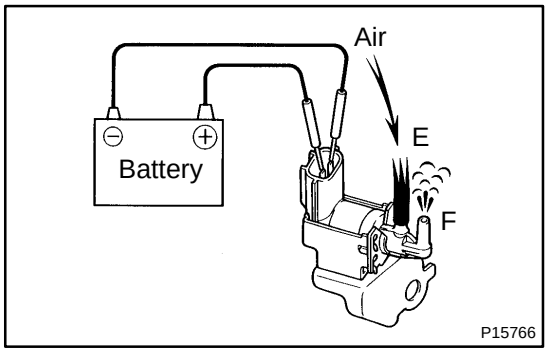

(2) Apply battery positive voltage across the terminals.

(3) Check that air flows from ports E to F.

If operation is not as specified, replace the VSV.

3. REINSTALL VSV

VSV FOR PRESSURE SWITCHING VALVE

SF1TF–01

COMPONENTS

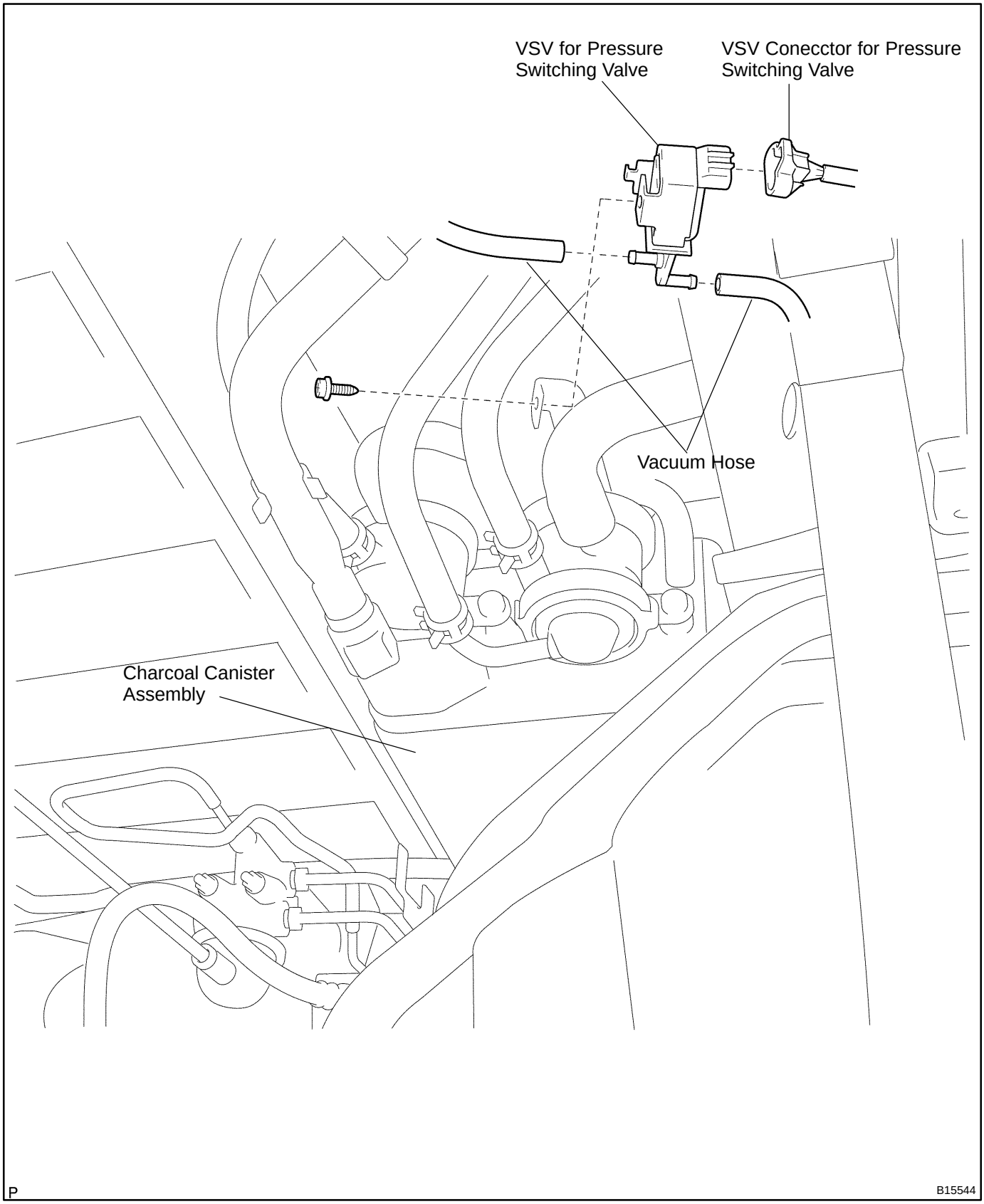

SF1TG–02

INSPECTION

1. REMOVE VSV

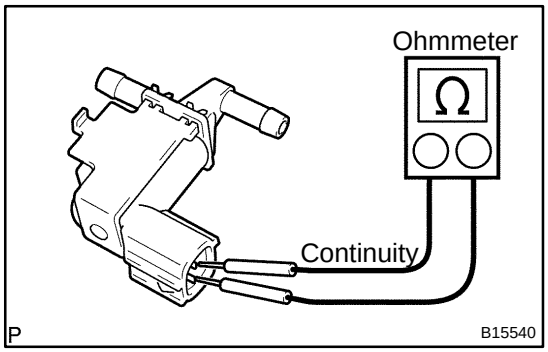

2. INSPECT VSV FOR OPEN CIRCUIT

Using an ohmmeter, check that there is continuity between the terminals.

Resistance:

At 20°C (68°F)	30 – 36 Ω

If there is no continuity, replace the VSV.

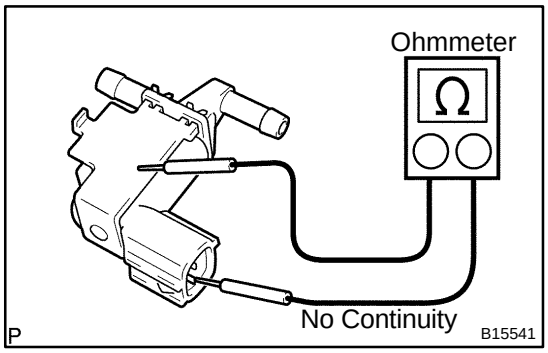

3. INSPECT VSV FOR GROUND

Using an ohmmeter, check that there is no continuity between each terminal and the body.

If there is continuity, replace the VSV.

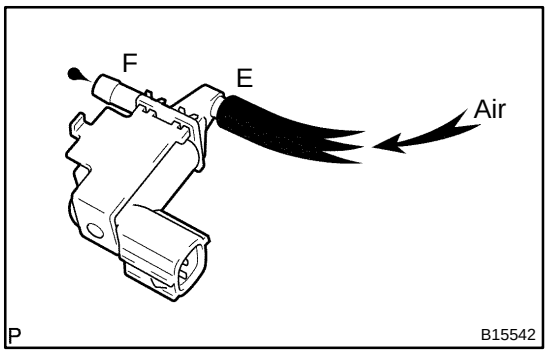

4. INSPECT VSV OPERATION

(a) Check that air does not flow from ports E to F.

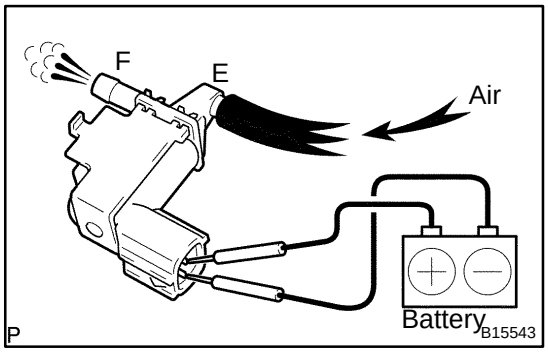

(b) Apply battery positive voltage across the terminals.

(c) Check that air flows from ports E to F.

If operation is not as specified, replace the VSV.

5. REINSTALL VSV

(a) Disconnect the connector and 2 vacuum hoses.

(b) Remove the bolt and VSV.

6. REMOVE VSV

(a) Disconnect the connector and 3 EVAP hoses from the VSV.

(b) Remove the bolt and VSV.

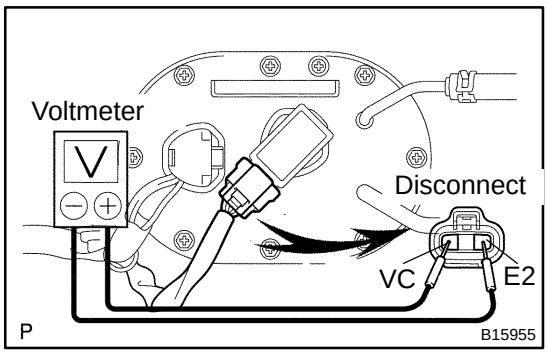

VAPOR PRESSURE SENSOR

SF03Y–07

INSPECTION

1. INSPECT POWER SOURCE VOLTAGE OF VAPOR PRESSURE SENSOR

(a) Disconnect the vapor pressure sensor connector.

HINT:

Near the fuel tank.

(b) Turn the ignition switch ON.

(c) Using a voltmeter, measure the voltage between connector terminals VC and E2 of the wiring harness side.

Voltage: 4.5 – 5.5 V

(d) Turn the ignition switch OFF.

(e) Reconnect the vapor pressure sensor connector.

2. INSPECT POWER OUTPUT OF VAPOR PRESSURE SENSOR

(a) Turn the ignition switch ON.

(b) Remove the fuel tank cap.

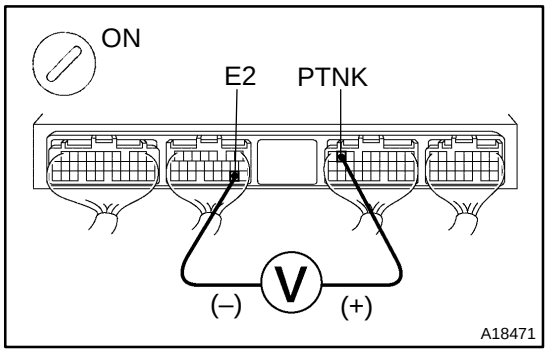

(c) Connect a voltmeter to terminals PTNK and E2, and measure the output voltage.

Voltage: 3.0 – 3.6 V

(d) Reinstall the fuel tank cap.

AIR–FUEL RATIO (A/F) SENSOR

SF1OG–01

COMPONENTS

(Bank 1 Sensor 1)

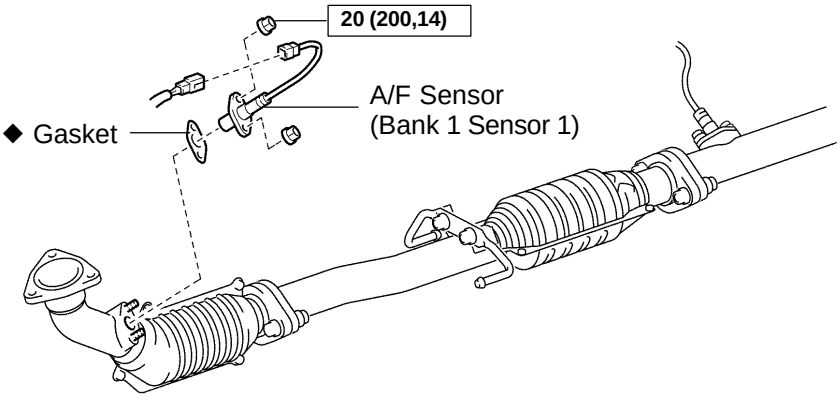

N·m (kgf·cm, ft·lbf) : Specified torque

P ◆ Non–reusable part

B09852

SF1OH–02

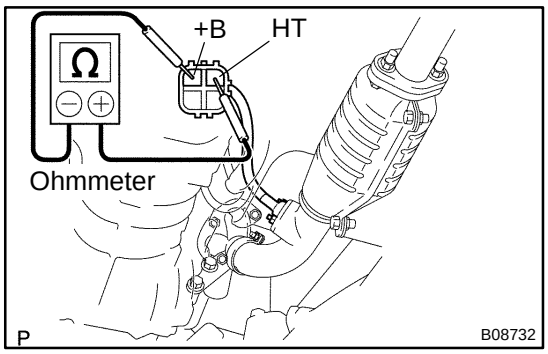

INSPECTION

1. INSPECT HEATER RESISTANCE OF A/F SENSOR

(a) Disconnect the sensor connector.

(b) Using an ohmmeter, measure the resistance between terminals +B and HT.

Resistance:

at 20˚C (68˚F)	0.8 – 1.4 Ω
at 800˚C (1,472˚F)	1.8 – 3.2 Ω

If the resistance is not as specified, replace the sensor.

Torque: 20 N·m (200 kgf·cm, 14 ft·lbf)

(c) Connect the sensor connector.

2. INSPECT OPERATION OF A/F SENSOR

(See page DI–421)

CIRCUIT OPENING RELAY

COMPONENTS

SF055–07

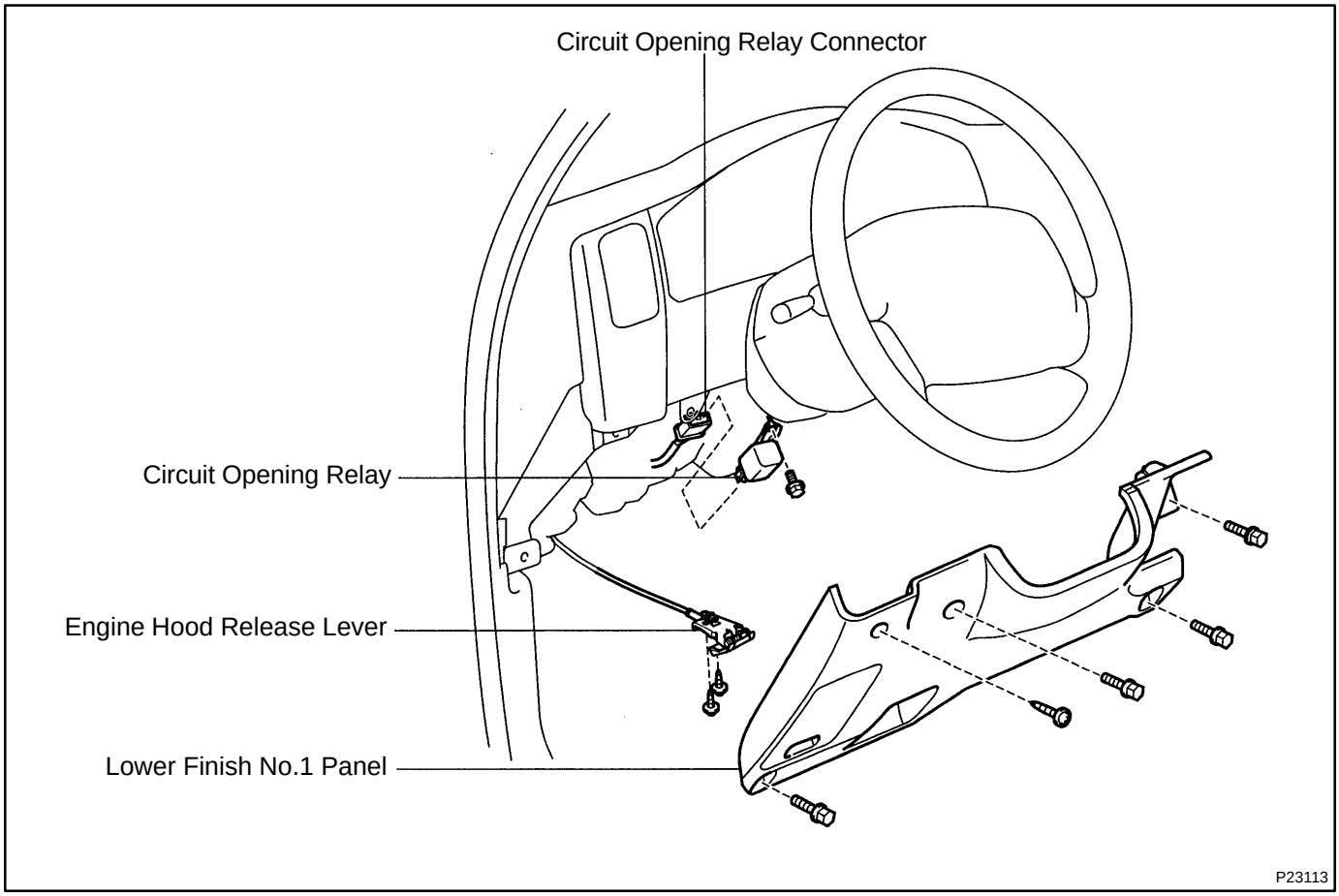

SF1TJ–01

INSPECTION

1. REMOVE CIRCUIT OPENING RELAY

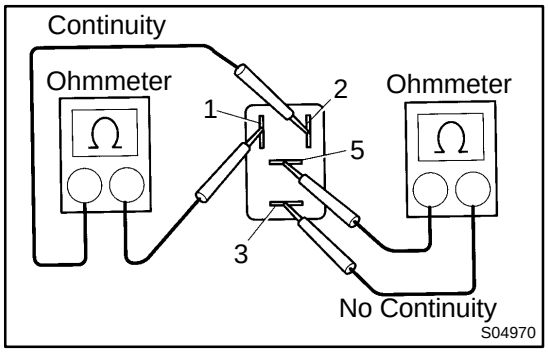

2. INSPECT CIRCUIT OPENING RELAY

(a) Inspect the relay continuity.

(1) Using and ohmmeter, check that there is continuity between terminals 1 and 2.

If there is continuity, replace the relay.

(2) Check that there is no continuity between terminals 3 and 5.

If there is continuity, replace the relay.

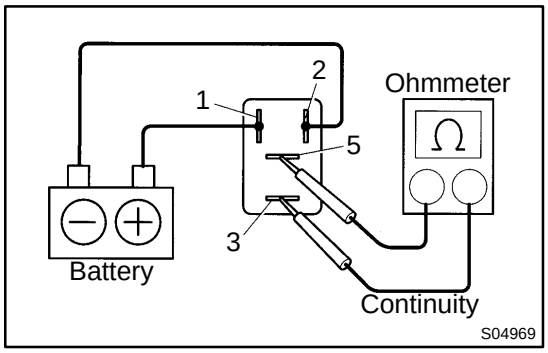

(b) Inspect the relay operation.

(1) Apply battery positive voltage across terminals 1 and 2.

(2) Using an ohmmeter, check that there is continuity between terminals 3 and 5.

If there is no continuity, replace the relay.

3. REINSTALL CIRCUIT OPENING RELAY

ENGINE CONTROL MODULE (ECM)

SF05G–06

COMPONENTS

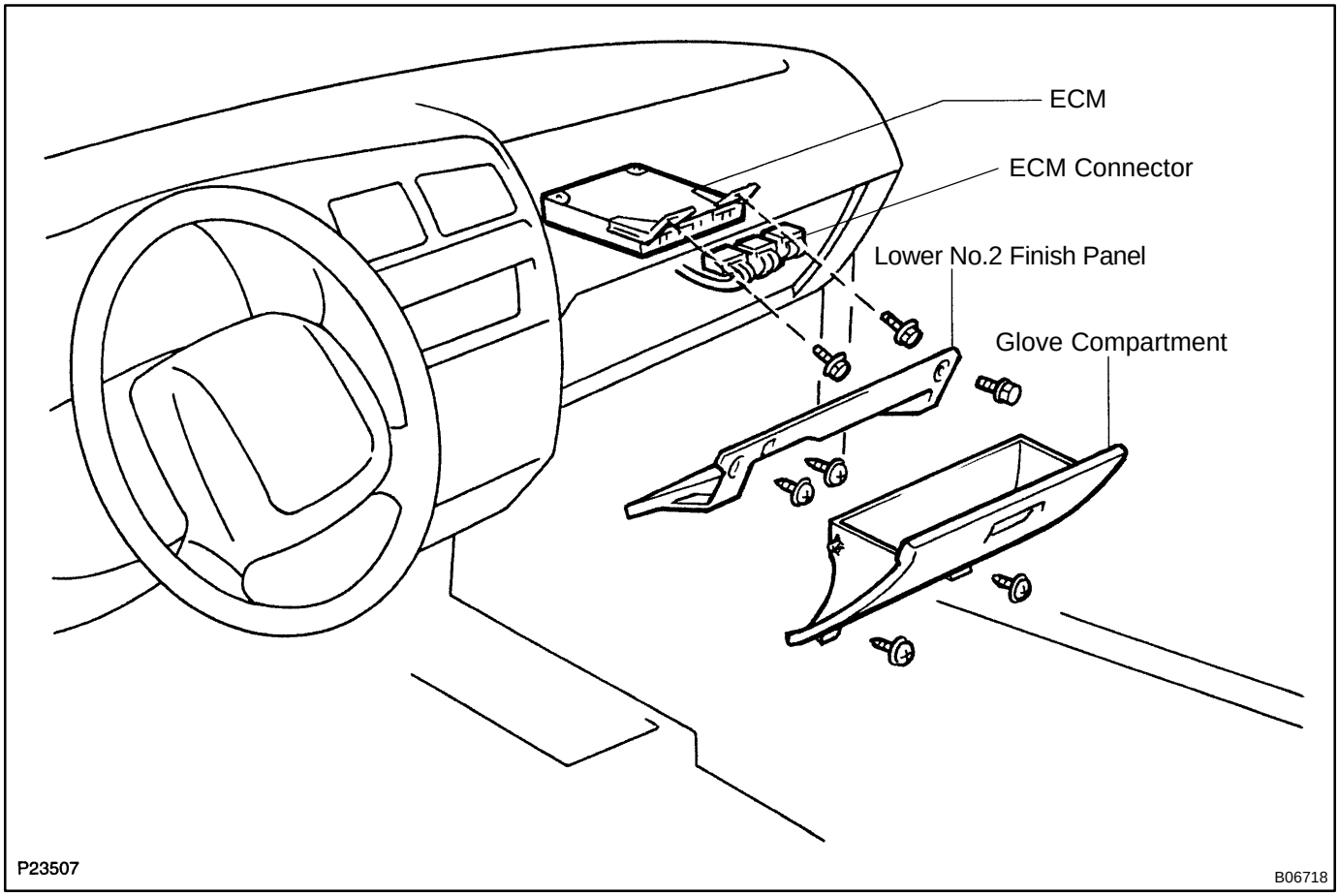

SF10L–02

INSPECTION

INSPECT ECM (See page DI–238)

ENGINE COOLANT TEMPERATURE (ECT) SENSOR

SF059–06

COMPONENTS

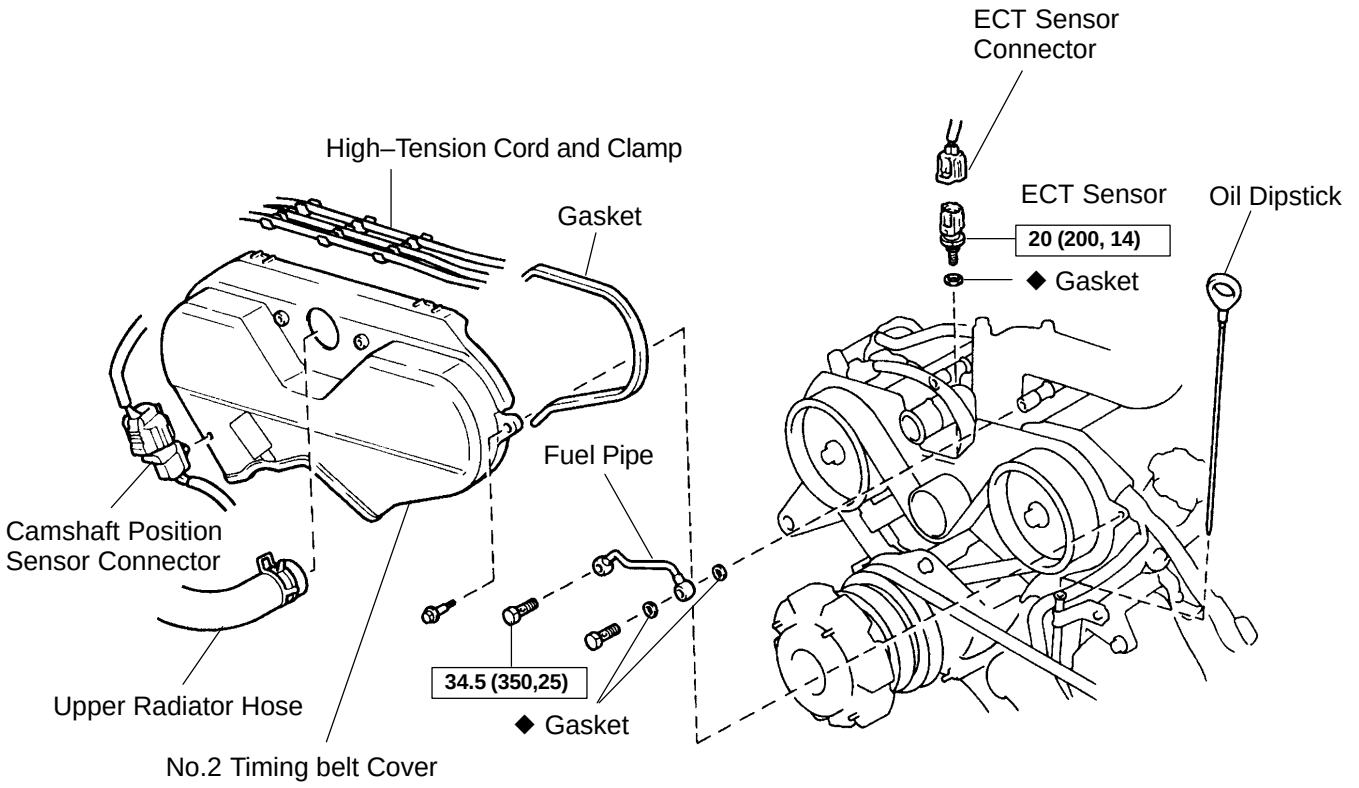

SF10K–02

INSPECTION

1. DRAIN ENGINE COOLANT
2. DISCONNECT UPPER RADIATOR HOSE FROM WATER OUTLET
3. REMOVE NO.2 TIMING BELT COVER
   (See page EM–13)

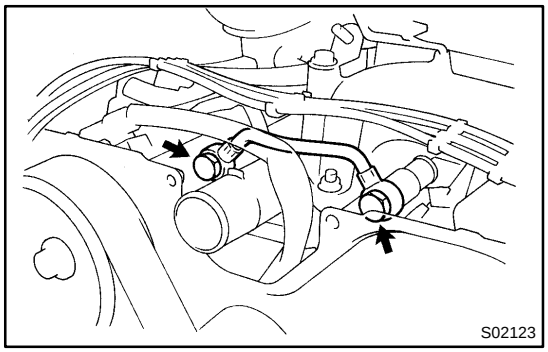

4. REMOVE FUEL PIPE

Remove the 2 union bolt, 4 gaskets and fuel pipe.

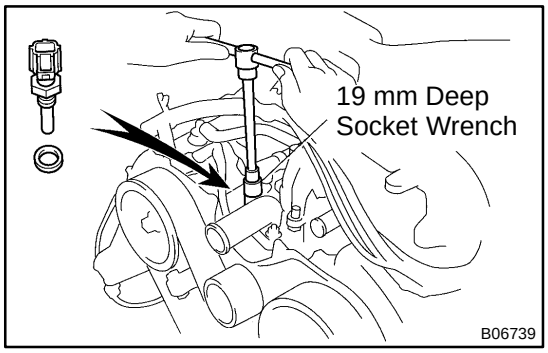

5. REMOVE ECT SENSOR

(a) Disconnect the ECT sensor connector.

(b) Using a 19 mm deep socket wrench, remove the ECT sensor and gasket.

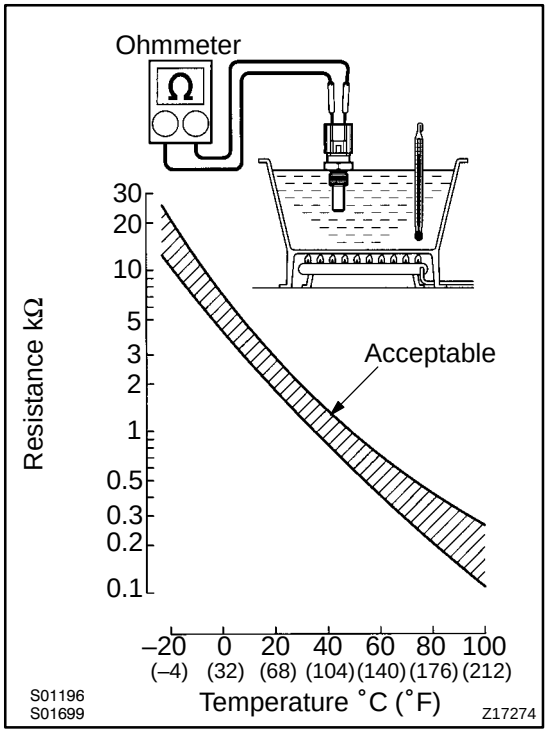

6. INSPECT ECT SENSOR

Using an ohmmeter, measure the resistance between the terminals.

Resistance: Refer to the graph

If the resistance is not as specified, replace the ECT sensor.

7. REINSTALL ECT SENSOR

(a) Install a new gasket to the ECT sensor.

(b) Using a 19 mm deep socket, install the ECT sensor.

Torque: 20 N·m (200 kgf·cm, 14 ft·lbf)

(c) Connect the ECT sensor connector.

8. REINSTALL FUEL PIPE

Install the fuel pipe with 4 new gaskets and the 2 union bolts.

Torque: 34.3 N·m (350 kgf·cm, 25 ft·lbf)

9. REINSTALL NO.2 TIMING BELT COVER
   (See page EM–19)
10. RECONNECT UPPER RADIATOR HOSE TO WATER OUTLET
11. REFILL WITH ENGINE COOLANT

EFI MAIN RELAY

SF175–02

INSPECTION

1. REMOVE EFI MAIN RELAY (Marking: EFI)

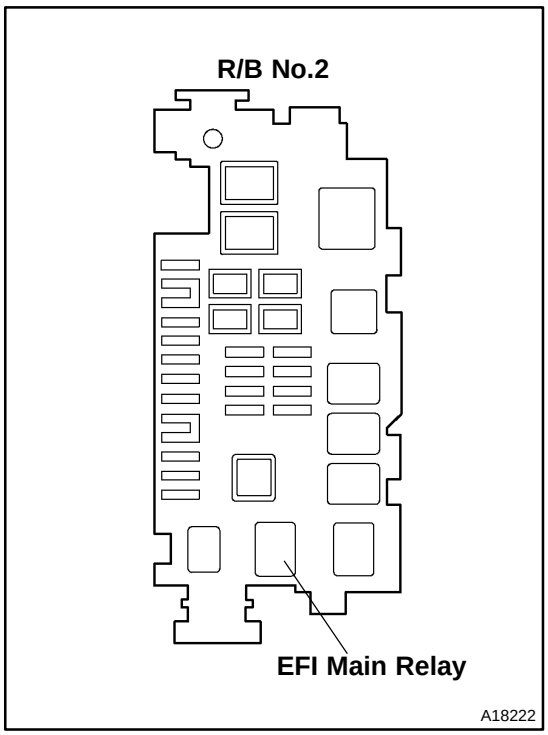

2. INSPECT EFI MAIN RELAY

(a) Inspect the relay continuity.

(1) Using an ohmmeter, check that there is continuity between terminals 1 and 2.

If there is no continuity, replace the relay.

(2) Check that there is no continuity between terminals 3 and 5.

If there is continuity, replace the relay.

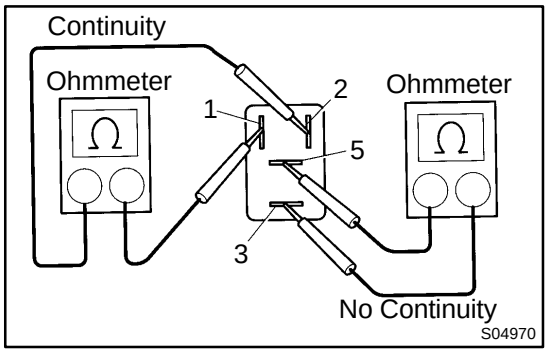

(b) Inspect the relay operation.

(1) Apply battery positive voltage across terminals 1 and 2.

(2) Using an ohmmeter, check that there is continuity between terminals 3 and 5.

If there is no continuity, replace the relay.

3. REINSTALL EFI MAIN RELAY

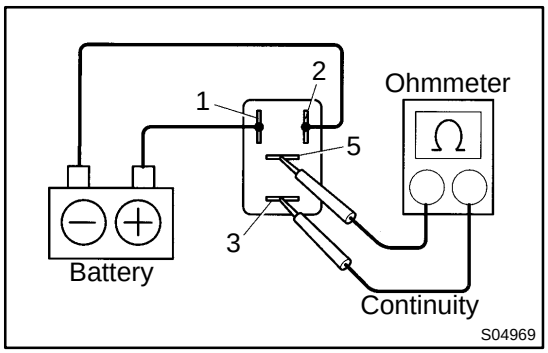

FUEL CUT RPM

SF10M–03

INSPECTION

1. WARM UP ENGINE

Allow the engine to warm up to normal operating temperature.

2. CONNECT TOYOTA HAND–HELD TESTER OR OBDII SCAN TOOL (See page SF–1)

3. INSPECT FUEL CUT OFF RPM

(a) Increase the engine speed to at least 3,500 rpm.

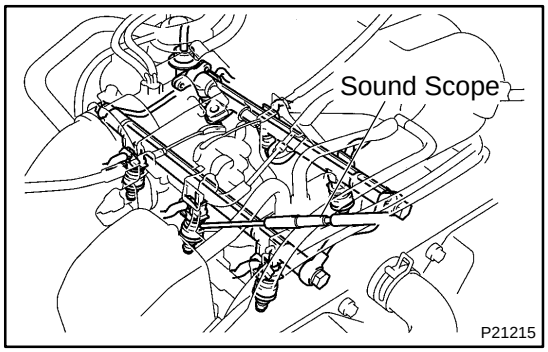

(b) Use a sound scope to check for injector operating noise.

(c) Check that when the throttle lever is released, injector operation noise stops momentarily and then resumes.

HINT:

Measure with the A/C OFF.

Fuel return rpm:

M/T	1,000 rpm
A/T	1,200rpm

4. DISCONNECT TOYOTA HAND–HELD TESTER OR OBDII SCAN TOOL

FUEL PRESSURE REGULATOR

SF04H–08

COMPONENTS

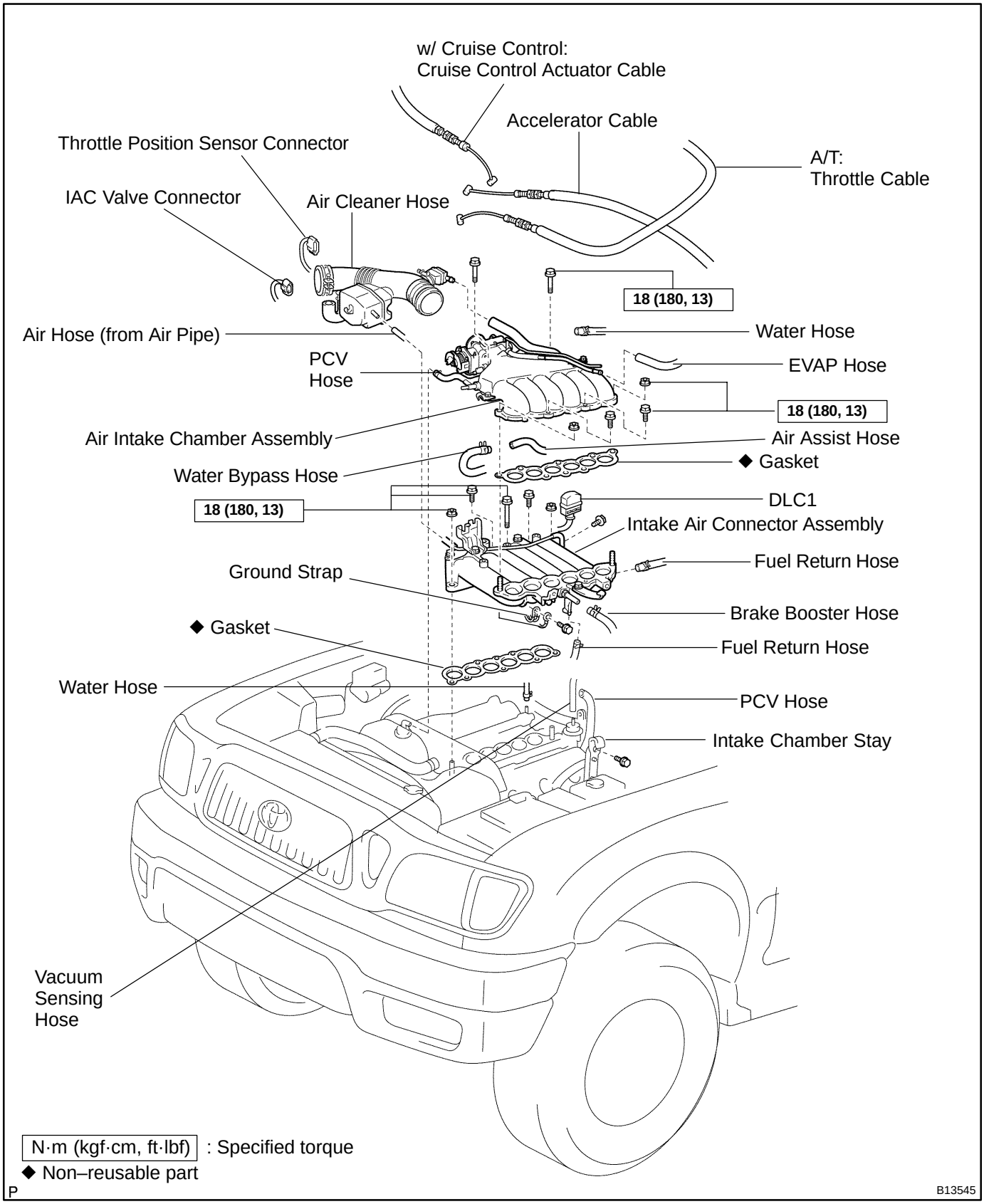

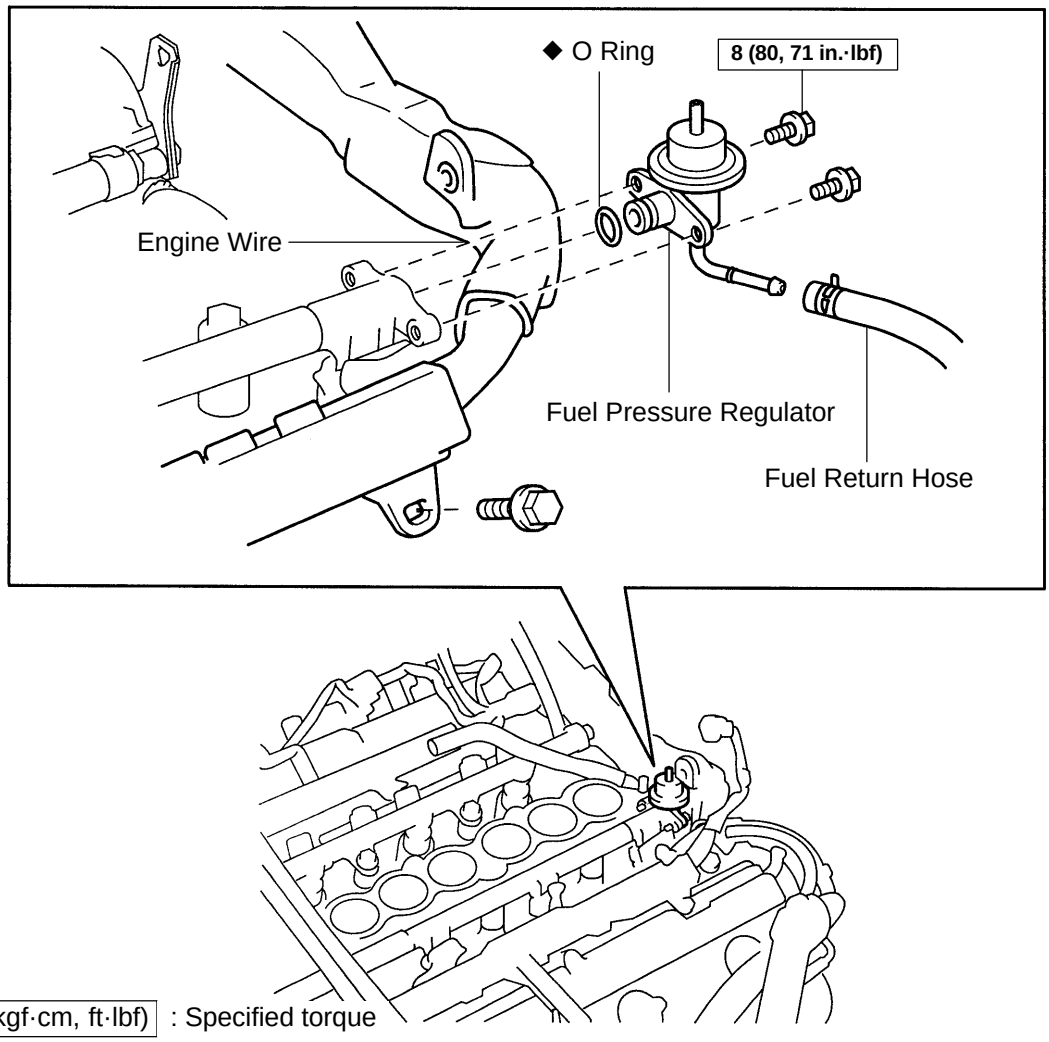

N·m (kgf·cm, ft·lbf) : Specified torque
◆ Non–reusable part

P21128

SF04J–06

INSTALLATION

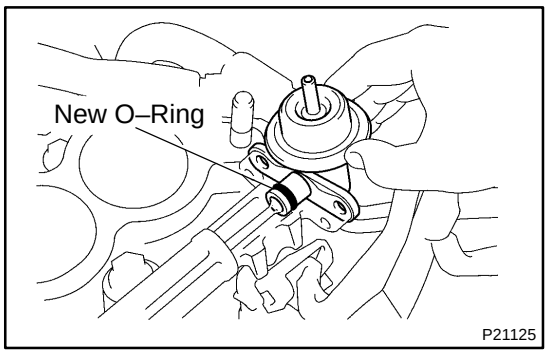

1. INSTALL FUEL PRESSURE REGULATOR

(a) Apply a light coat of gasoline to a new O–ring, and install it to the pressure regulator.

(b) Attach the pressure regulator to the LH delivery pipe.

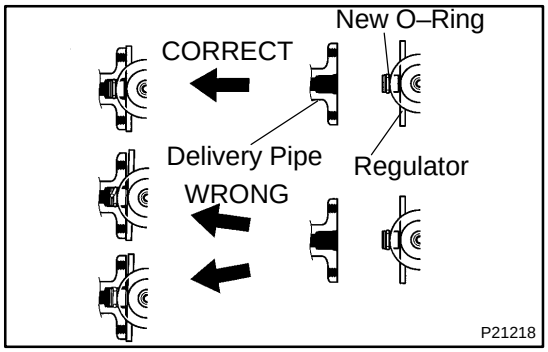

(c) Check that the pressure regulator rotates smoothly.

NOTICE:

If it does not rotate smoothly, the O–ring may be pinched, so remove the pressure regulator and repeat steps (a) to (c) above.

(d) Install the pressure regulator with the 2 bolts.

Torque: 8 N·m (80 kgf·cm, 71 in.·lbf)

(e) Install the engine wire with the bolt.

2. CONNECT FUEL RETURN HOSE TO FUEL PRESSURE REGULATOR

NOTICE:

Be sure to insert the hose up to the stopper and clip it.

3. INSTALL INTAKE AIR CONNECTOR ASSEMBLY (See page EM–52)

4. INSTALL AIR CLEANER HOSE

5. CHECK FOR FUEL LEAKS (See page SF–1)

SF04I–06

REMOVAL

1. **REMOVE AIR CLEANER HOSE**
2. **REMOVE INTAKE AIR CONNECTOR ASSEMBLY (See page EM–29)**
3. **DISCONNECT FUEL RETURN HOSE FROM FUEL PRESSURE REGULATOR**

CAUTION:
Put a shop rag under the pressure regulator.

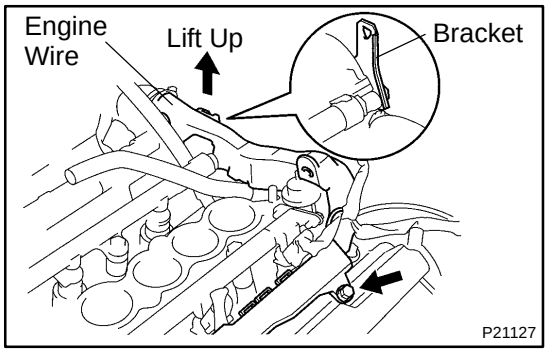

4. **REMOVE FUEL PRESSURE REGULATOR**

(a) Remove holding bolt the engine wire to the LH cylinder head cover.

(b) Disconnect the protector from the bracket on the RH cylinder head cover, and lift up the engine wire.

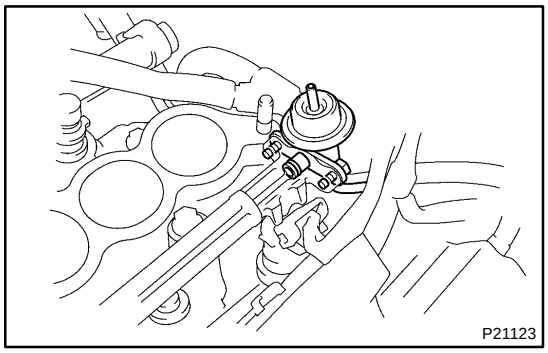

(c) Remove the 2 bolts, and pull out the pressure regulator.

(d) Remove the O–ring from the pressure regulator.

FUEL TANK AND LINE

SF04O–10

COMPONENTS

CAUTION:

- **Always use new gaskets when replacing the fuel tank or component parts.**
- **Apply the proper torque to all tightened parts.**

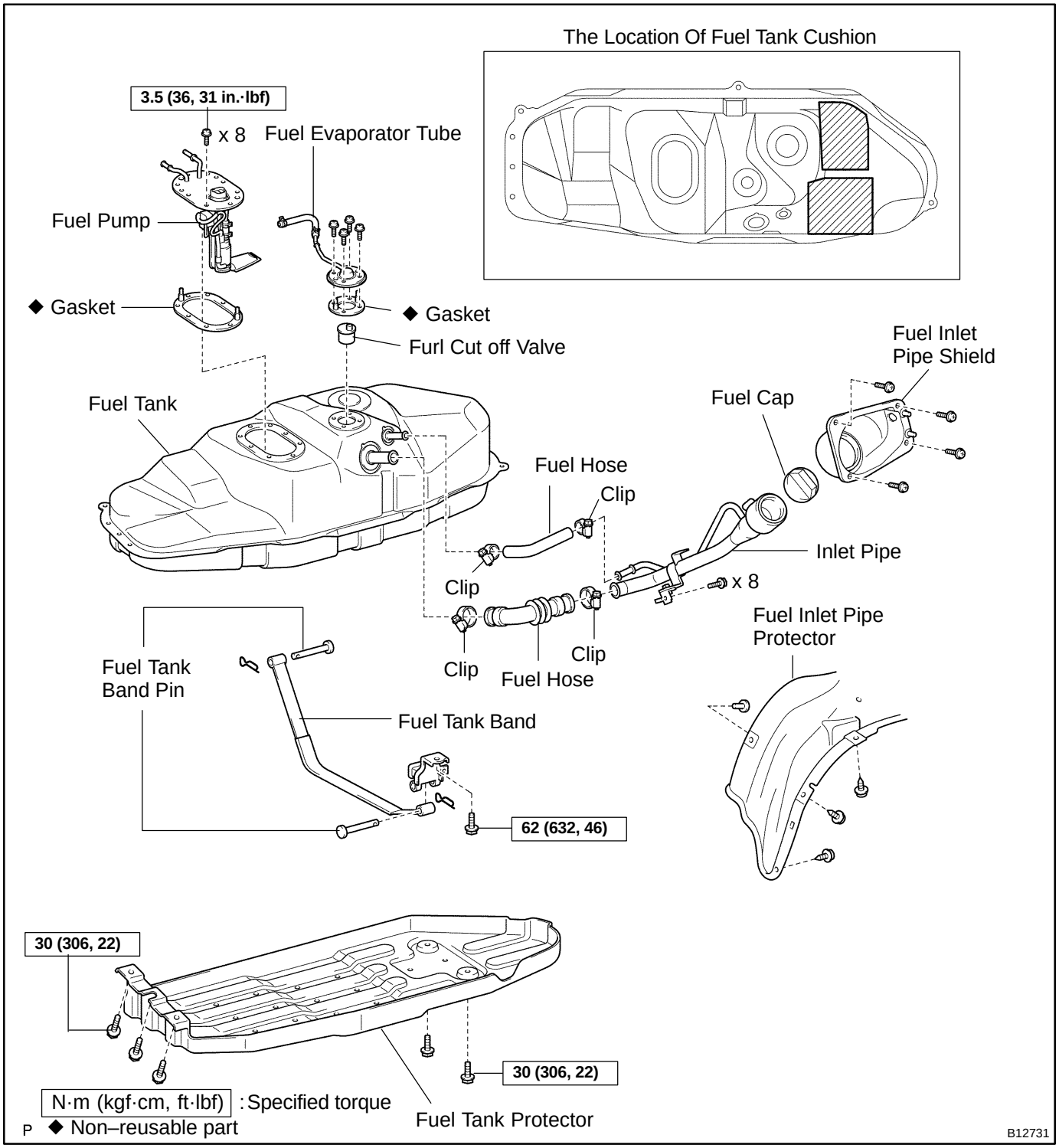

SF04Q–06

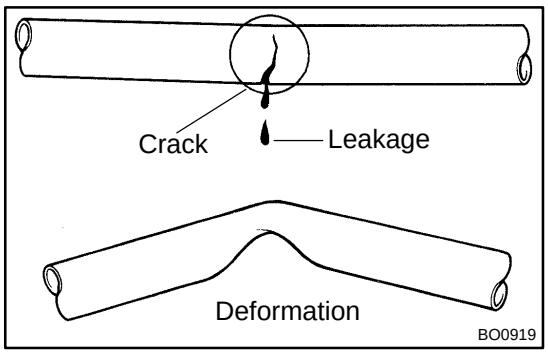

INSPECTION

INSPECT FUEL TANK AND LINE

(a) Check the fuel lines for cracks or leakage, and all connections for deformation.
(b) Check the fuel tank vapor vent system hoses and connections for looseness, sharp bends or damage.
(c) Check the fuel tank for deformation, cracks, fuel leakage or tank band looseness.
(d) Check the filler neck for damage or fuel leakage.
(e) Hose and pipe connections are as shown in the illustration.

If a problem is found, repair or replace the parts as necessary.

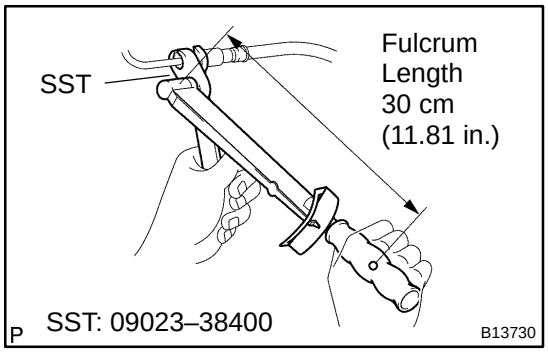

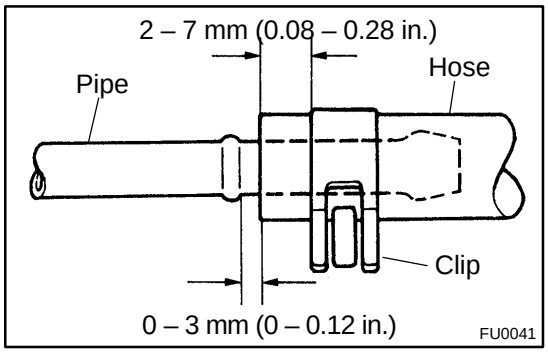

SF1T2–01

COMPONENTS

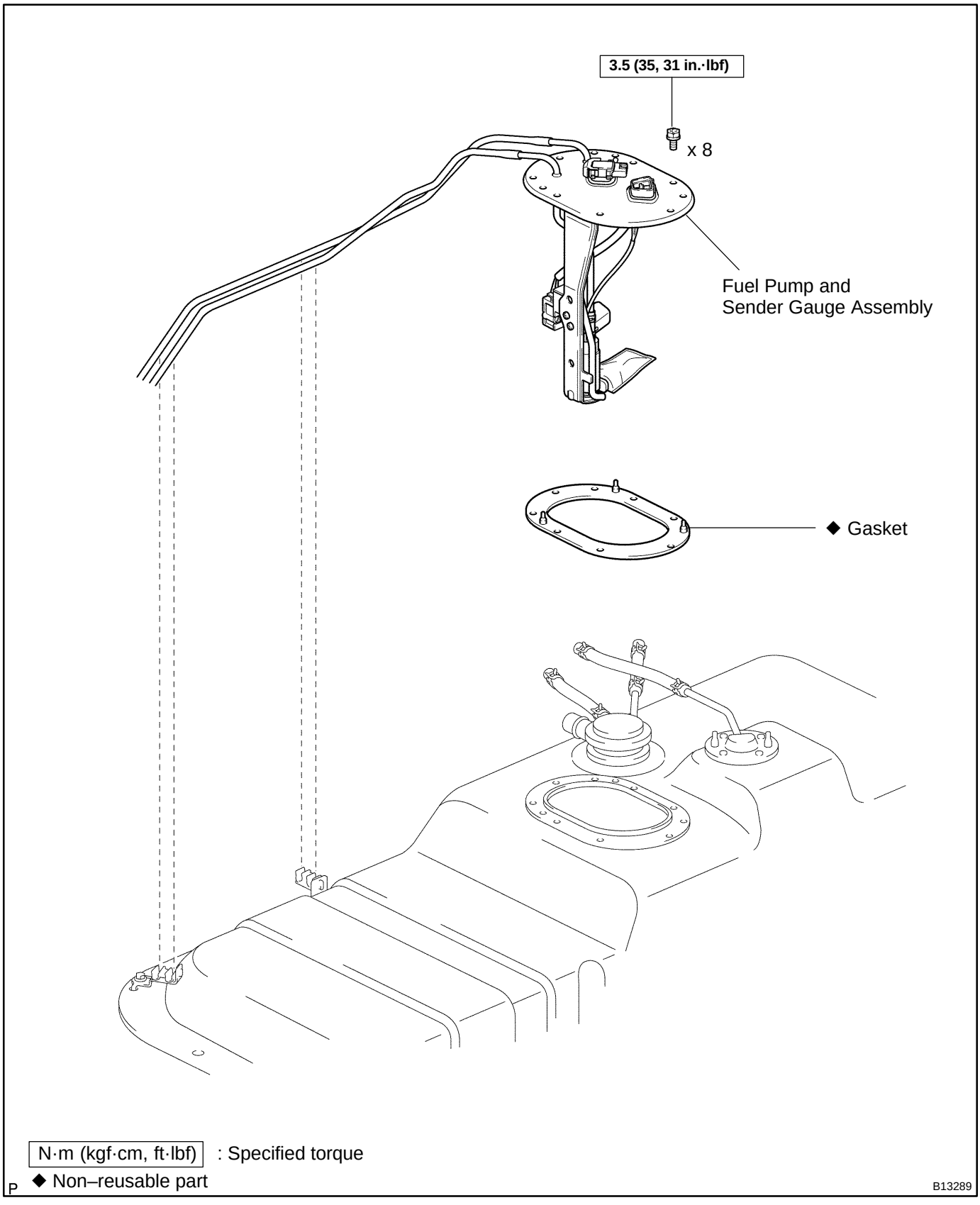

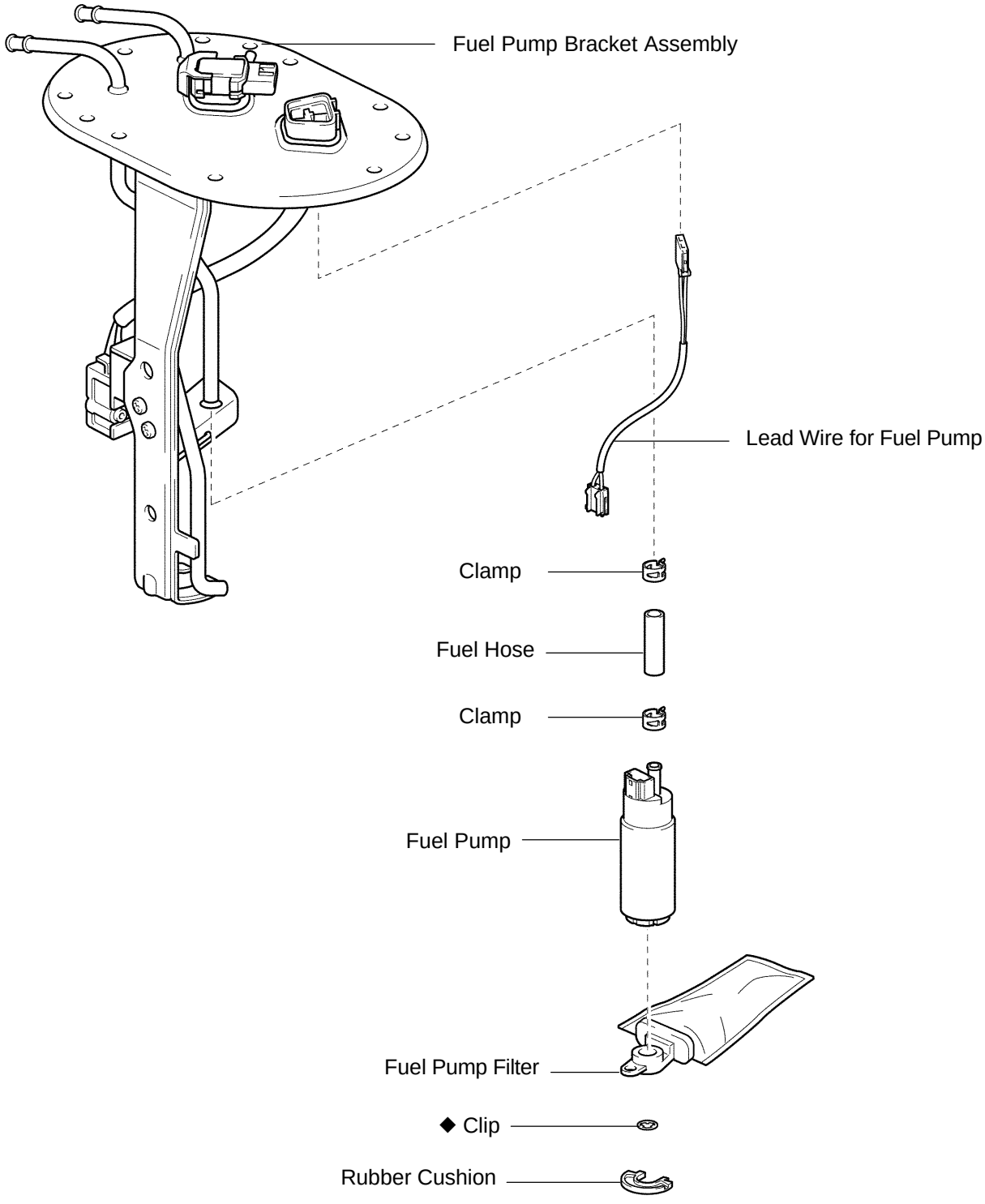

P ◆ Non–reusable part

B13290

SF1T4–01

INSTALLATION

1. INSTALL FUEL PUMP FILTER TO FUEL PUMP

Install the pump filter with a new clip.

2. INSTALL FUEL PUMP TO FUEL PUMP BRACKET

(a) Install the rubber cushion to the fuel pump.

(b) Connect the fuel hose to the outlet port of the fuel pump.

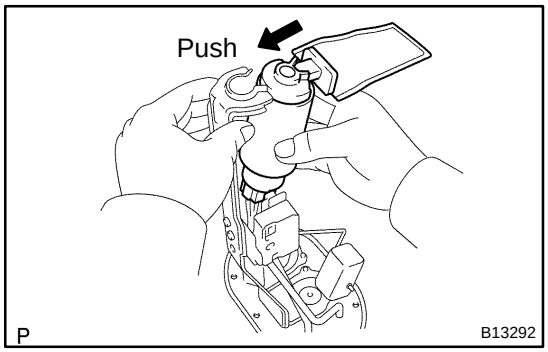

(c) Install the fuel pump by pushing the lower side of the fuel pump.

(d) Install the lead wire to the fuel pump and connector of the fuel suction plate.

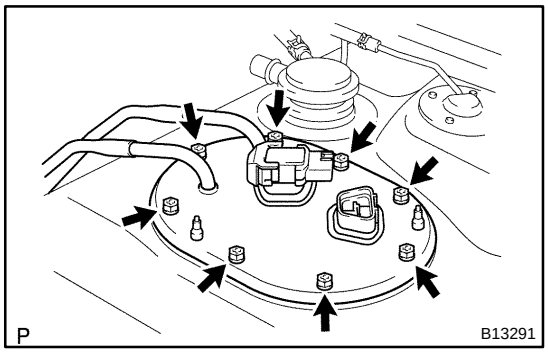

3. INSTALL FUEL PUMP AND SENDER GAUGE ASSEMBLY TO FUEL TANK

(a) Install a new gasket to the fuel suction plate.

(b) Insert the fuel pump and sender gauge assembly into the fuel tank.

(c) Install the fuel pump and sender gauge to the fuel tank with the 8 bolts.

Torque: 3.5 N·m (35 kgf·cm, 31 in.·lbf)

4. CONNECT FUEL MAIN TUBE AND RETURN TUBE TO FUEL TANK

5. CHECK FOR FUEL LEAKS (See page SF–1)

6. INSTALL FUEL TANK (See page SF–23)

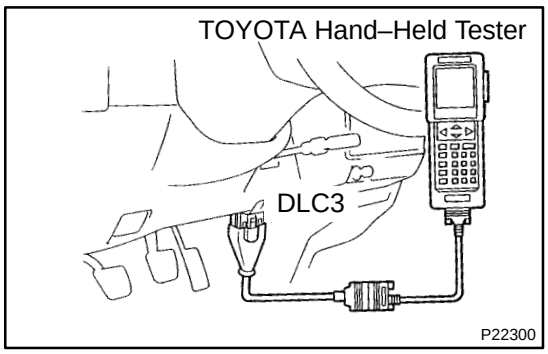

FUEL PUMP

SF107–04

ON–VEHICLE INSPECTION

1. CHECK FUEL PUMP OPERATION

(a) Connect a TOYOTA hand–held tester to the DLC3.

(b) Turn the ignition switch ON and push TOYOTA hand–held tester main switch ON.

NOTICE:

Do not start the engine.

(c) Select the ACTIVE TEST mode on the TOYOTA hand–held tester.

(d) Please refer to the TOYOTA hand–held tester operator's manual for further details.

(e) If you have no TOYOTA hand–held tester, connect the positive (+) and negative (–) leads from the battery to the fuel pump connector (See step 4).

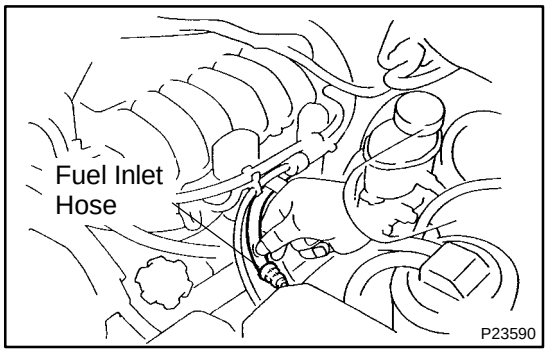

(f) Check that there is pressure in the fuel inlet hose from the fuel filter.

HINT:

If there is fuel pressure, you will hear the sound of fuel flowing. If there is no pressure, check the M–fuse, fuses, EFI main relay, fuel pump, ECM and wiring connections.

(g) Turn the ignition switch OFF.

(h) Disconnect the TOYOTA hand–held tester from the DLC3.

2. CHECK FUEL PRESSURE

(a) Check the battery positive voltage is above 12 V.

(b) Disconnect the negative (–) terminal cable from the battery.

(c) Remove the 6 bolts, and disconnect the No.2 timing belt cover.

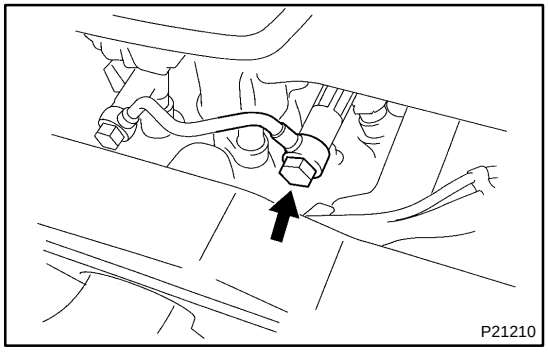

(d) Remove the union bolt holding the fuel pipe to the delivery pipe and gasket.

CAUTION:

- **Put a shop towel under the delivery pipe.**
- **Slowly loosen the union bolt.**

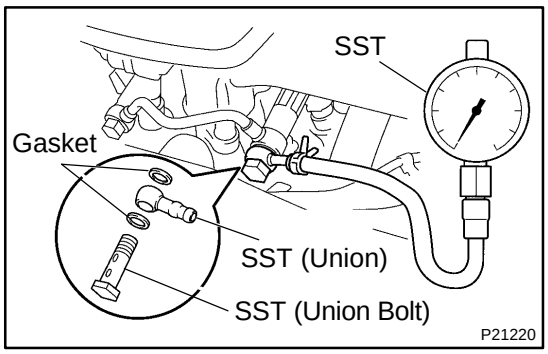

(e) Install SST (pressure gauge) to the delivery pipe with the 2 gaskets and SST (union and union bolt).
SST 09268–45014
Torque: 34.3 N·m (350 kgf·cm, 25 ft·lbf)
(f) Wipe off any splattered gasoline.
(g) Connect a TOYOTA hand–held tester to the DLC3 (See step 1).
(h) Reconnect the negative (–) terminal cable to the battery.
(i) Turn the ignition switch ON.
(j) Measure the fuel pressure.
Fuel pressure:
265 – 304 kPa (2.7 – 3.1 kgf/cm^2, 38 – 44 psi)

If pressure is high, replace the fuel pressure regulator.
If pressure is low, check the fuel hoses, fuel hose connections, fuel pump, fuel filter and fuel pressure regulator.

(k) Disconnect the TOYOTA hand–held tester from the DLC3.
(l) Reinstall the No.2 timing belt cover with the 6 bolts.
Torque: 9 N·m (90 kgf·cm, 80 in.·lbf)
(m) Start the engine.

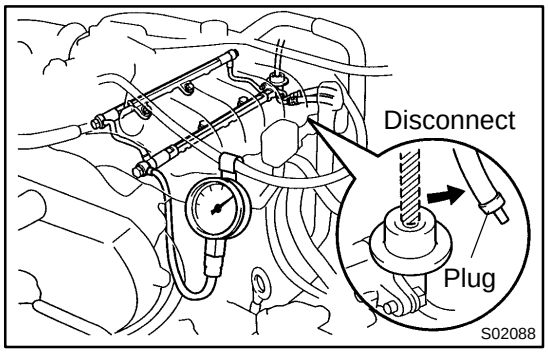

(n) Disconnect the vacuum sensing hose from the fuel pressure regulator, and plug the hose end.
(o) Measure the fuel pressure at idle.
Fuel pressure:
265 – 304 kPa (2.7 – 3.1 kgf/cm^2, 38 – 44 psi)
(p) Reconnect the vacuum sensing hose to the fuel pressure regulator.
(q) Measure the fuel pressure at idle.
Fuel pressure:
226 – 265 kPa (2.3 – 2.7 kgf/cm^2, 33 – 38 psi)

If pressure is not as specified, check the vacuum sensing hose and fuel pressure regulator.

(r) Stop the engine.
(s) Check that the fuel pressure remains as specified for 5 minutes after the engine has stopped.
Fuel pressure: 147 kPa (1.5 kgf/cm^2, 21 psi) or more

If pressure is not as specified, check the fuel pump, pressure regulator and/or injectors.

(t) After checking fuel pressure, disconnect the negative (–) terminal cable from the battery and carefully remove the SST to prevent gasoline from splashing.
SST 09268–45014
(u) Remove the other union bolt, 3 gaskets and fuel pipe from the delivery pipes.
(v) Reinstall the fuel pipe with 4 new gaskets and the 2 union bolts.
Torque: 34.3 N·m (350 kgf·cm, 25 ft·lbf)
(w) Reconnect the negative (–) terminal cable to the battery.
(x) Check for fuel leaks (See page SF–1).

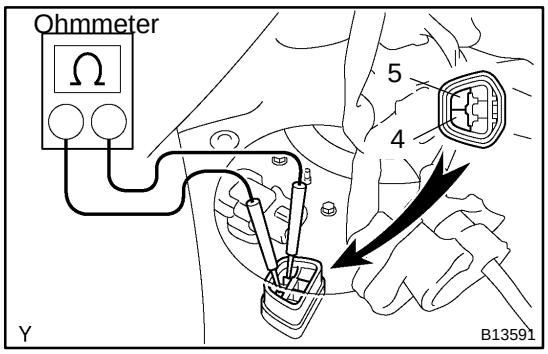

3. INSPECT FUEL PUMP RESISTANCE

(a) Pull up the LH rear seat cushion.
(b) Remove the floor service hole cover with the 3 screws.
(c) Disconnect the fuel pump connector.
(d) Using an ohmmeter, measure the resistance between terminals 4 and 5.

Resistance: 0.2 – 0.3 Ω at 20˚C (68˚F)

If the resistance is not specified, replace the fuel pump and/or set plate.

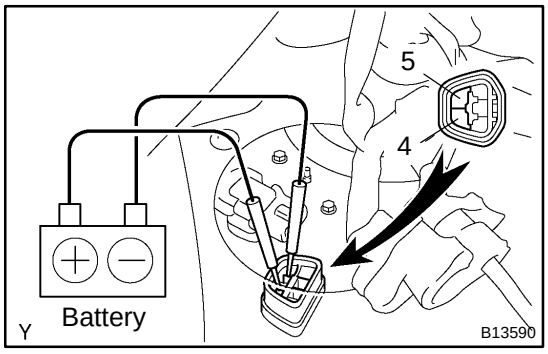

4. INSPECT FUEL PUMP OPERATION

(a) Connect the positive (+) lead from the battery to terminal 4 of the connector, and the negative (–) lead to terminal 5. Check that the fuel pump operations.

NOTICE:

- **These tests must be done quickly (within 10 seconds) to prevent the coil from burning out.**
- **Keep the fuel pump as far away from the battery as possible.**
- **Always do switching at the battery side.**

If operation is as not specified, replace the fuel pump and/or set plate.

(b) Connect the fuel pump connector.
(c) Install the floor service hole cover with the 3 screws.
(d) Connect the LH rear seat cushion.

SF1T3–01

REMOVAL

CAUTION:
Do not smoke or work near an open frame when working the fuel pump.

1. **REMOVE FUEL TANK (See page SF–23)**
2. **DISCONNECT FUEL MAIN TUBE AND RETURN TUBE FROM FUEL TANK**

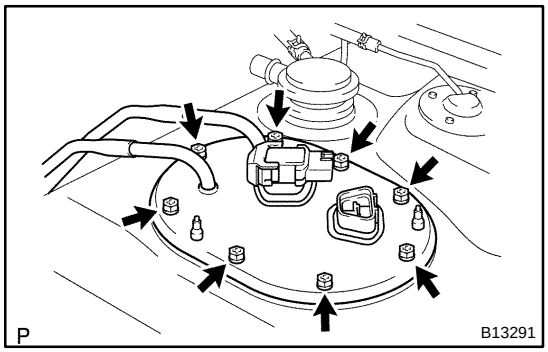

3. **REMOVE FUEL PUMP AND SENDER GAUGE ASSEMBLY FROM FUEL TANK**

(a) Remove the 8 bolts.
(b) Pull out the fuel pump and sender gauge assembly.

NOTICE:
- **Do not damage the fuel pump filter.**
- **Be careful not to bend the arm of the sender gauge.**

(c) Remove the gasket from the fuel section plate.

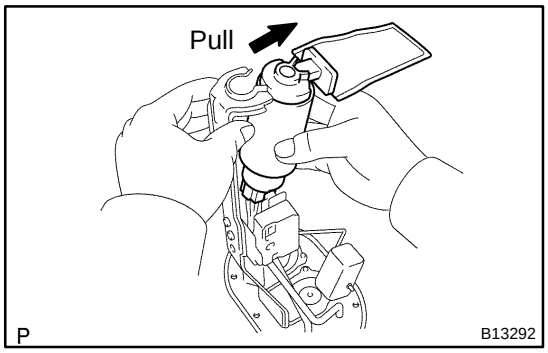

4. **REMOVE FUEL PUMP FROM FUEL PUMP BRACKET**

(a) Disconnect the lead wire from the connecor of the fuel sustion plate.
(b) Pull out the lower side of the fuel pump from the pump bracket.
(c) Disconnect the fuel hose from the fuel pump, and remove the fuel pump.
(d) Remove the rubber cushion from the fuel pump.

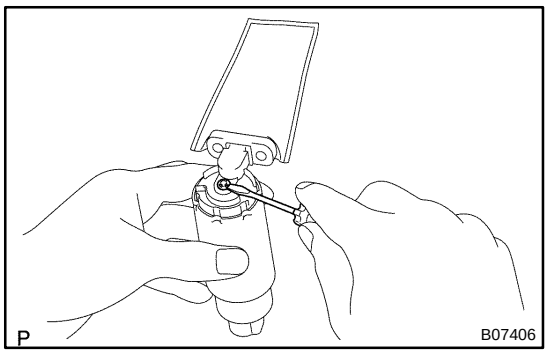

5. **REMOVE FUEL PUMP FILTER FROM FUEL PUMP**

(a) Using a small screwdriver, remove the clip.
(b) Pull out the pump filter.

HEATED OXYGEN SENSOR

COMPONENTS

SF178–03

(Bank 1 Sensor 2)

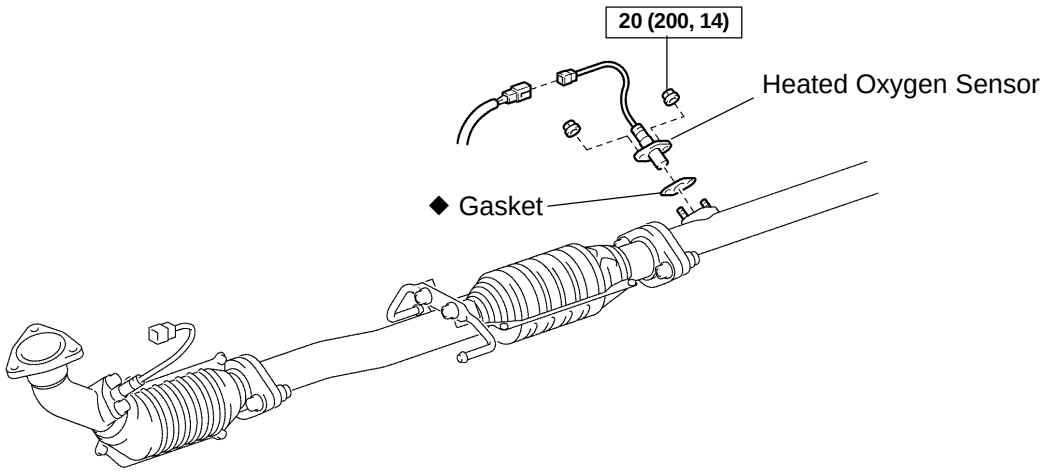

P

N·m (kgf·cm, ft·lbf) : Specified torque
◆ Non–reusable part

B09854

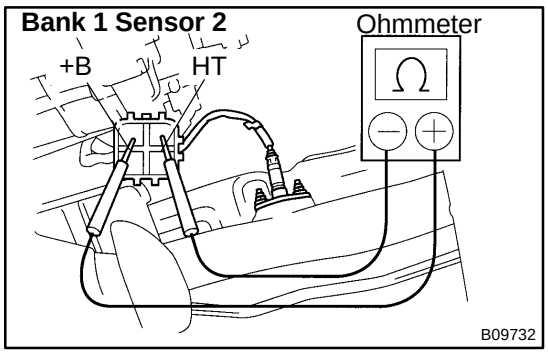

SF179–02

INSPECTION

1. INSPECT HEATER RESISTANCE OF HEATED OXYGEN SENSOR

(a) Disconnect the sensor connector.

(b) Using an ohmmeter, measure the resistance between terminals +B and HT.

Resistance:

at 20˚C (68˚F)	11 – 16 Ω
at 800˚C (1,472˚F)	23 – 32 Ω

If the resistance is not as specified, replace the sensor.

Torque: 20 N·m (200 kgf·cm, 14 ft·lbf)

(c) Reconnect the oxygen sensor connector.

2. Bank 1 Sensor 2:

INSPECT OPERATION OF HEATED OXYGEN SENSOR (See page DI–288)

SF10F–04

COMPONENTS

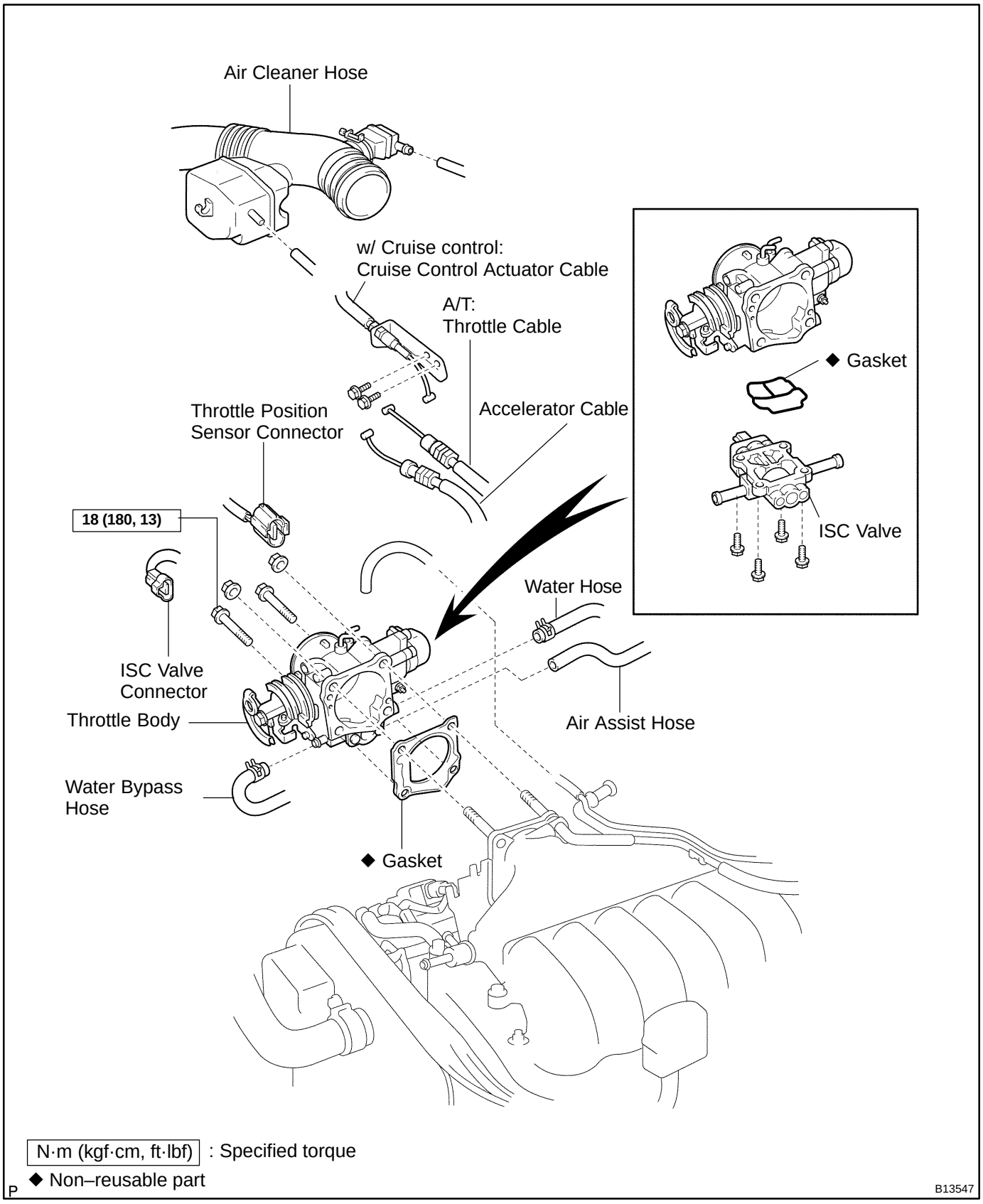

SF052–04

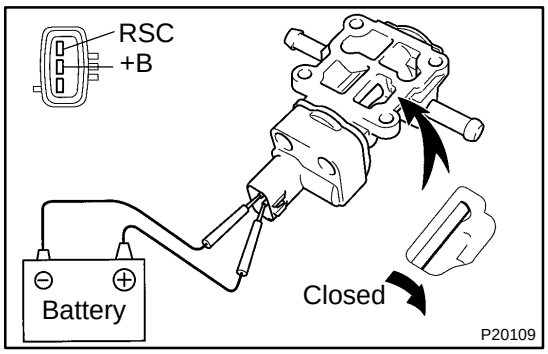

INSPECTION

INSPECT IAC VALVE OPERATION

(a) Connect the positive (+) lead from the battery to terminal +B and negative (–) lead to terminal RSC, and check that the valve is closed.

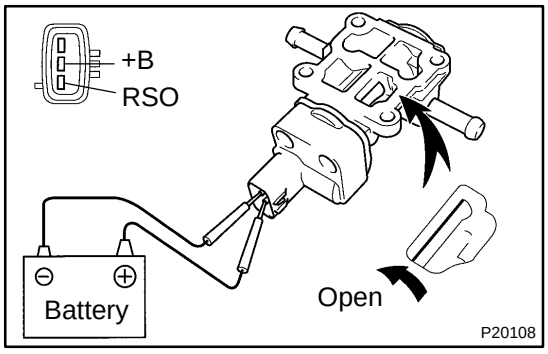

(b) Connect the positive (+) lead from the battery to terminal +B and negative (–) lead to terminal RSO, and check that the valve is open.

If operation is not as specified, replace the IAC valve.

SF10G–03

INSTALLATION

Installation is in the reverse order of removal (See page SF–42).

IDLE AIR CONTROL (IAC) VALVE (w/o ETCS–i)

SF04Z–07

ON–VEHICLE INSPECTION

1. INSPECT IAC VALVE OPERATION

(a) Initial conditions:
- Engine at normal operating temperature
- Idle speed checked correctly
- Transmission in neutral position
- A/C switch OFF

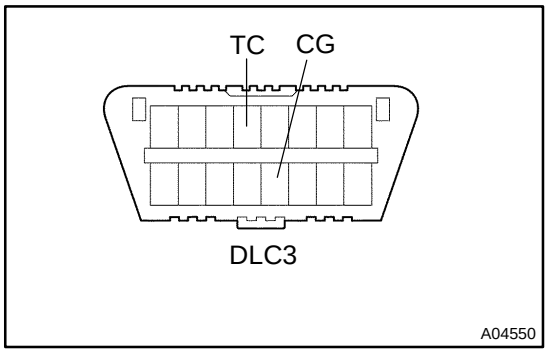

(b) Using SST, connect terminals TC and CG of the DLC3.
SST 09843–18040

(c) After engine speed is kept at approx. 1,000 rpm for 5 seconds, check that it returns to the idle speed.

If the engine speed operation is not as specified, check the IAC valve, wiring and ECM.

(d) Remove the SST from the DLC3.
SST 09843–18040

2. INSPECT IAC VALVE RESISTANCE

NOTICE:

"Cold" and "Hot" in the following sentences express the temperature of the coils themselves. "Cold" is from –10˚C (14˚F) to 50˚C (122˚F) and "Hot" is from 50˚C (122˚F) to 100˚C (212˚F).

(a) Disconnect the IAC valve connector.

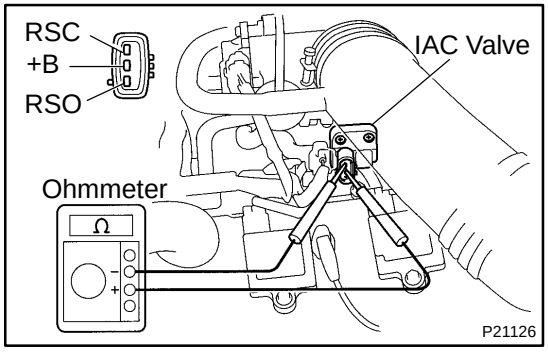

(b) Using an ohmmeter, measure the resistance between terminal +B and other terminals (RSC, RSO).
Resistance:

Cold	17.0 – 25.0 Ω
Hot	21.5 – 29.5 Ω

If the resistance is not as specified, replace the IAC valve.

(c) Reconnect the IAC valve connector.

3. INSPECT AIR ASSIST SYSTEM

(a) Initial conditions:
- Engine at normal operating temperature
- Idle speed checked correctly
- Transmission in neutral position
- A/C switch OFF

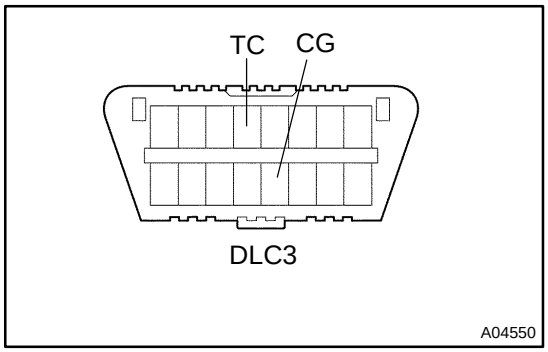

(b) Using SST, connect terminals TC and CG of the DLC1.
SST 09843–18040

(c) After the engine speed is kept at 900 – 1,300 rpm for 10 seconds, check that it returns to the idle speed.

(d) Stop the engine.

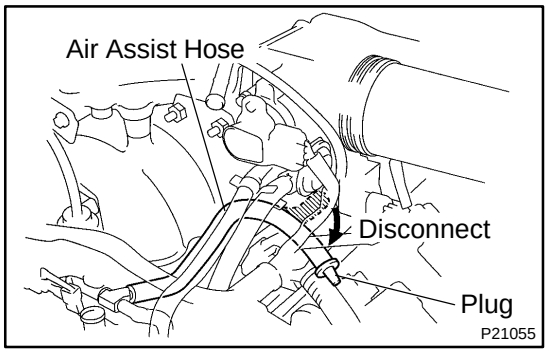

(e) Disconnect the air assist hose from the IAC valve, and plug it.

(f) Start the engine and check that the idle speed reaches 500 rpm or below (the engine may stall).

If the idle does not reach 500 rpm or below, check for a leak between the air assist hoses, pipe and injectors.

(g) Remove the SST from the DLC3.
SST 09843–18040

(h) Reconnect the air assist hose to the IAC valve.

SF051–05

REMOVAL

1. REMOVE THROTTLE BODY (See page SF–36)

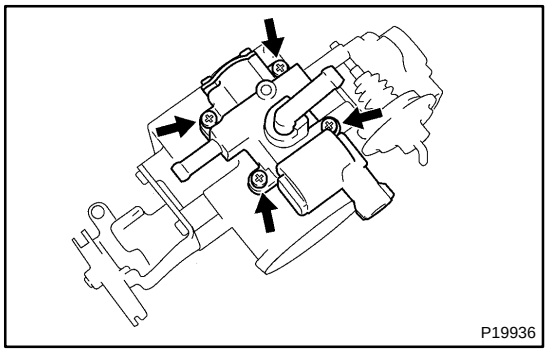

2. REMOVE IAC VALVE

Remove the 4 screws, IAC valve and gasket.

HINT:

At the time of installation, please refer to the following items.

Place a new gasket on the throttle body.

INJECTOR

COMPONENTS

SF04K–05

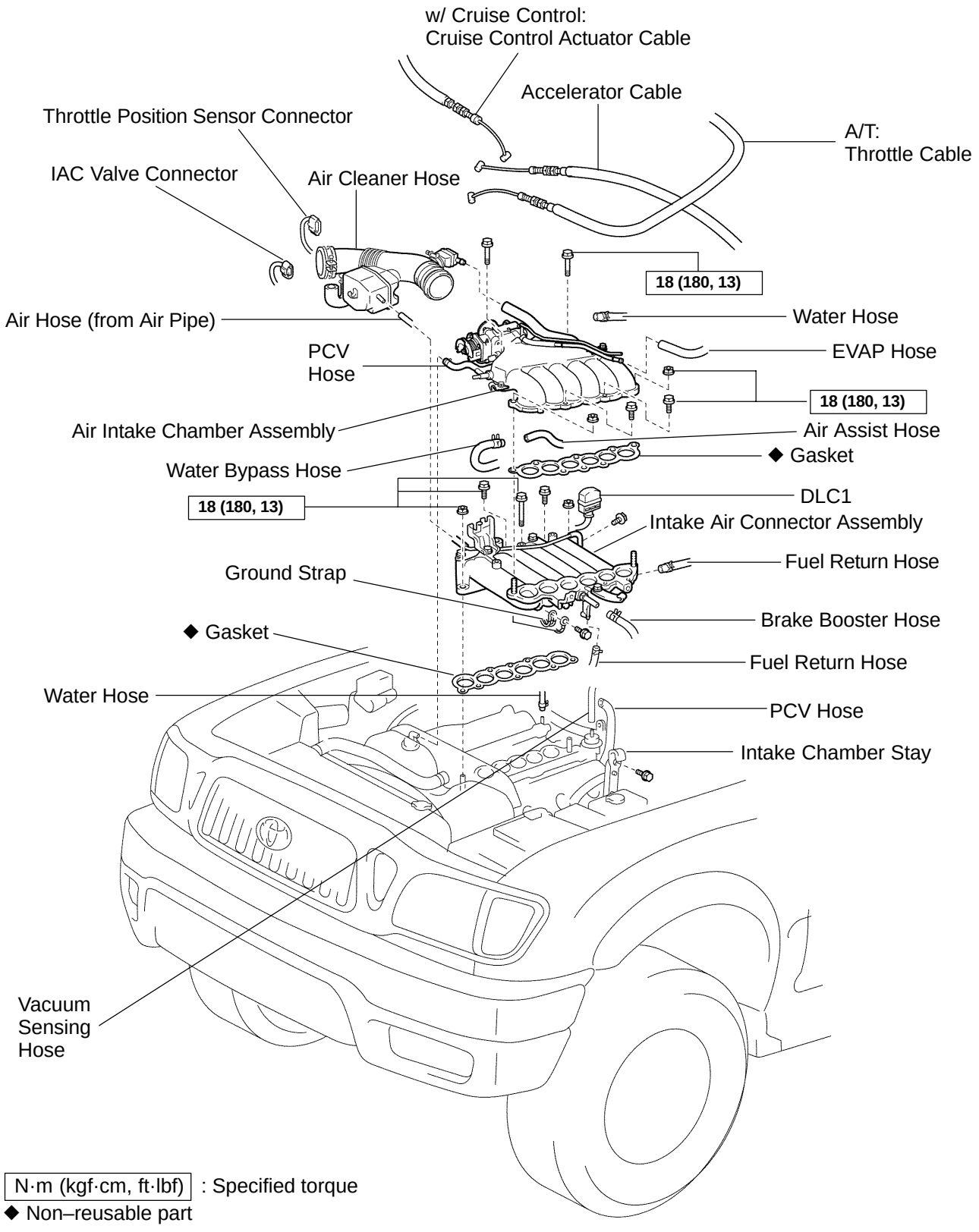

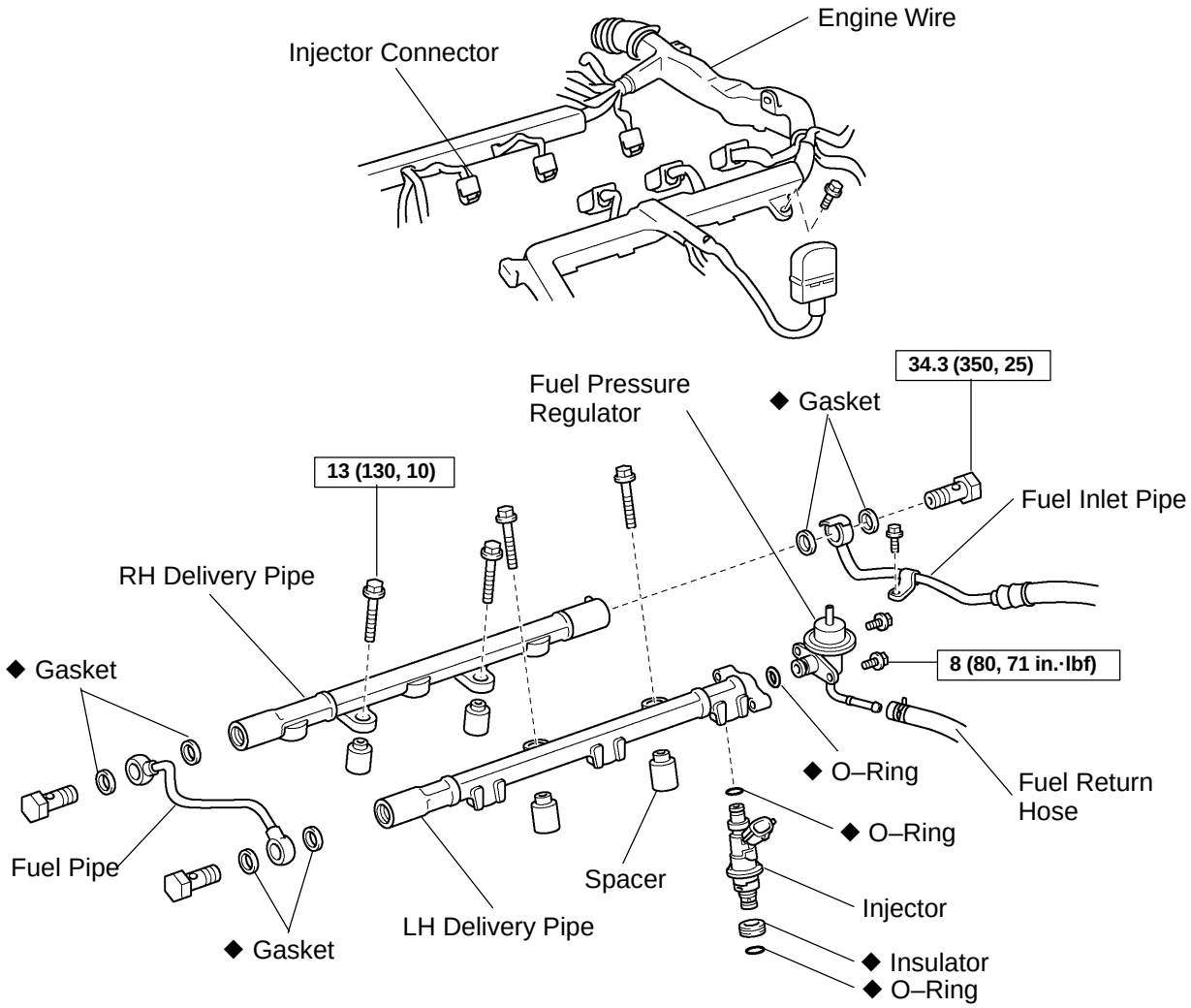

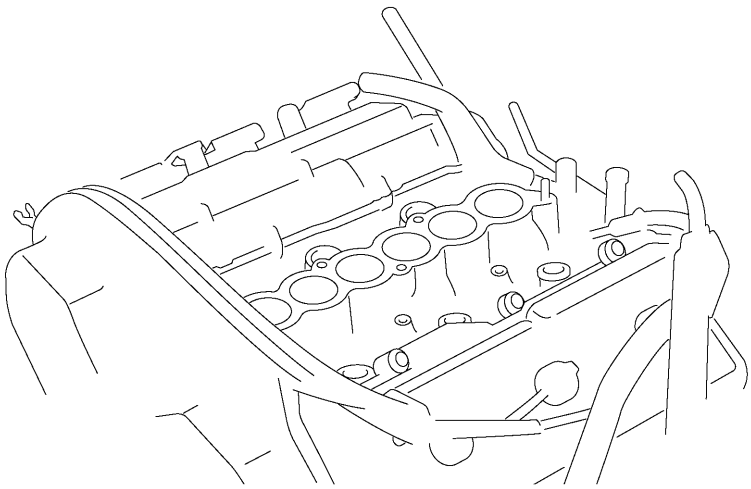

N·m (kgf·cm, ft·lbf) : Specified torque
◆ Non–reusable part

Y

B06047

SF10A–04

INSPECTION

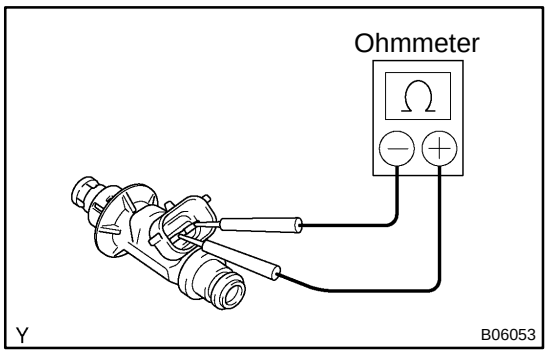

1. INSPECT INJECTOR RESISTANCE

Using an ohmmeter, measure the resistance between the terminals.

Resistance: Approx. 13.8 Ω at 20˚C (68˚F)

If the resistance is not as specified, replace the injector.

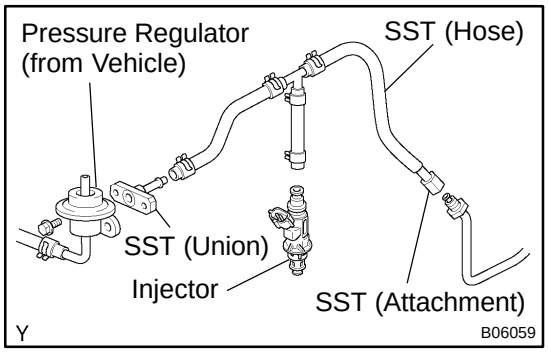

2. INSPECT INJECTOR INJECTION

CAUTION:

Keep injector clear of sparks during the test.

(a) Disconnect the fuel inlet pipe from the fuel tube.

(b) Connect SST (attachment and hose) to the fuel tube.
SST 09268–41047 (09268–52011)

(c) Connect the fuel return hose, SST (union) and SST (hose) to the fuel pressure regulator.
SST 09268–41047 (09268–41091)

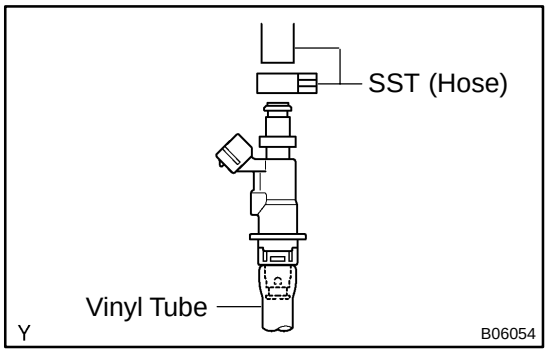

(d) Connect SST (hose) to the injector.
SST 09268–41047

(e) Put the injector into the graduated cylinder.

HINT:

Install a suitable vinyl hose onto the injector to prevent gasoline from splashing out.

(f) Connect a TOYOTA hand–held tester to the DLC3 (See page EM–9).

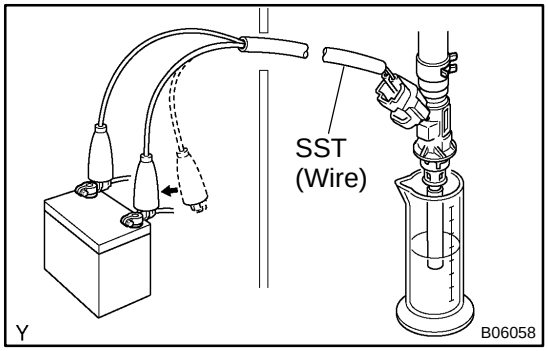

(g) Connect SST (wire) to the injector and battery for 15 seconds, and measure the injection volume with a graduated cylinder. Test each injector 2 or 3 times.
SST 09842–30070
Volume: 56 – 69 cm^3 (3.4 – 4.2 cu in.) per 15 sec.
Difference between each injector:
1.3 cm^3 (0.08 cu in.) or less

If the injection volume is not as specified, replace the injector.

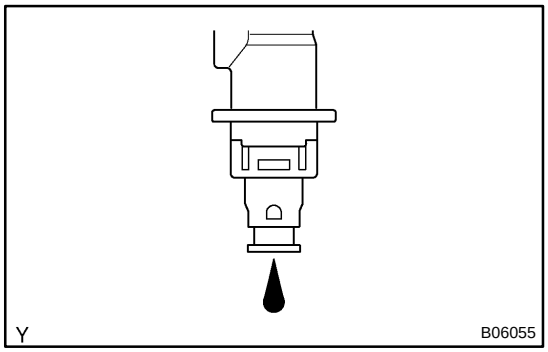

3. INSPECT LEAKAGE

(a) In the condition above, disconnect the tester probes of SST (wire) from the battery and check the fuel leakage from the injector.
SST 09842–30070
Fuel drop: 1 drop or less per 12 minutes

(b) Turn the ignition switch OFF.

(c) Disconnect the negative (–) terminal cable from the battery.

(d) Remove the SST.
SST 09268–41047, 09842–30070

(e) Disconnect the TOYOTA hand–held tester from the DLC3.

SF04N–05

INSTALLATION

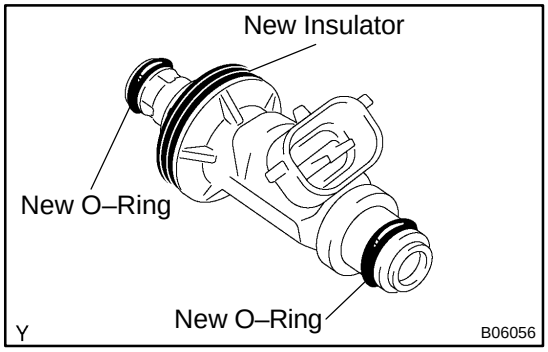

1. INSTALL INJECTORS AND DELIVERY PIPES

(a) Install a new insulator to each injector.

(b) Apply a light coat of spindle oil or gasoline to 2 new O–rings and install them to each injector.

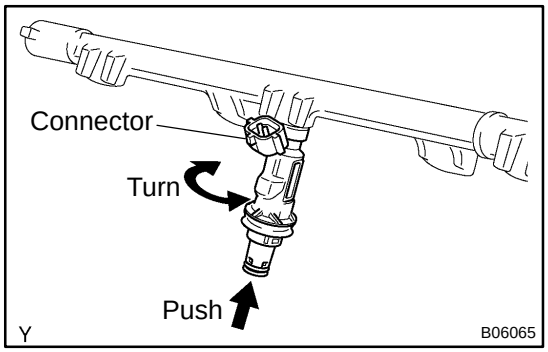

(c) While turning the injector clockwise and counterclockwise, push it to the delivery pipes. Install the 6 injectors.

(d) Position the injector connector outward.

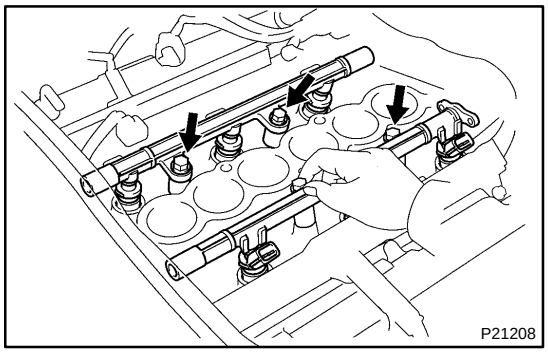

(e) Place the 4 spacers in position on the intake manifold.

(f) Place the delivery pipes with the 6 injectors in position on the intake manifold.

(g) Temporarily install the 4 bolts holding the delivery pipes to the intake manifold.

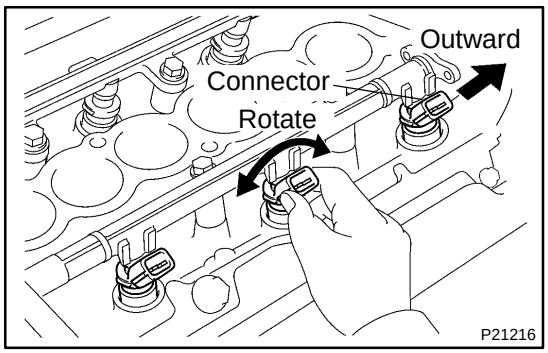

(h) Check that the injectors rotate smoothly.

HINT:

If injectors do not rotate smoothly, the probable cause is incorrect installation of O–rings. Replace the O–rings.

(i) Position the injector connector outward.

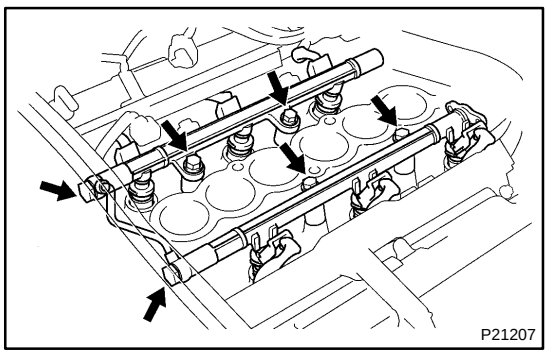

2. CONNECT INJECTOR CONNECTORS

3. INSTALL FUEL PIPE AND TIGHTENING DELIVERY PIPE HOLDING BOLTS

(a) Install the fuel pipe with 4 new gaskets and the 2 union bolts.

Torque: 34.3 N·m (350 kgf·cm, 25 ft·lbf)

(b) Tighten the 4 bolts holding the delivery pipes to the intake manifold.

Torque: 13 N·m (130 kgf·cm, 10 ft·lbf)

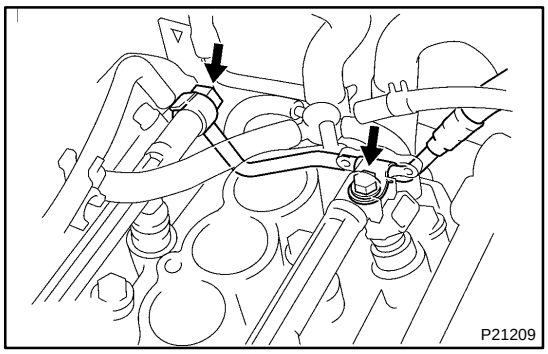

4. CONNECT FUEL INLET PIPE

(a) Temporarily install the inlet pipe with 2 new gaskets, union bolt and bolt.

(b) Tighten the clamp bolt.
Torque: 8 N·m (80 kgf·cm, 71 in.·lbf)

(c) Tighten the union bolt.
Torque: 34.3 N·m (350 kgf·cm, 25 ft·lbf)

5. INSTALL FUEL PRESSURE REGULATOR
(See page SF–15)

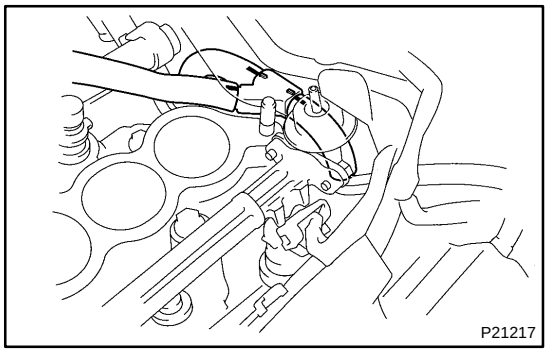

6. INSPECT AIR ASSIST LINES AND CONNECTIONS

Visually check for loose connections, sharp bends or damage.

7. INSTALL INTAKE AIR CONNECTOR ASSEMBLY
(See page EM–52)

8. INSTALL AIR CLEANER HOSE

9. CHECK FOR FUEL LEAKS (See page SF–1)

SF04L–07

REMOVAL

1. REMOVE AIR CLEANER HOSE

2. REMOVE INTAKE AIR CONNECTOR ASSEMBLY (See page EM–29)

3. REMOVE FUEL PRESSURE REGULATOR (See page SF–14)

4. DISCONNECT FUEL INLET PIPE

CAUTION:

Catch leaking fuel in a container.

5. REMOVE FUEL PIPE

6. DISCONNECT INJECTOR CONNECTORS

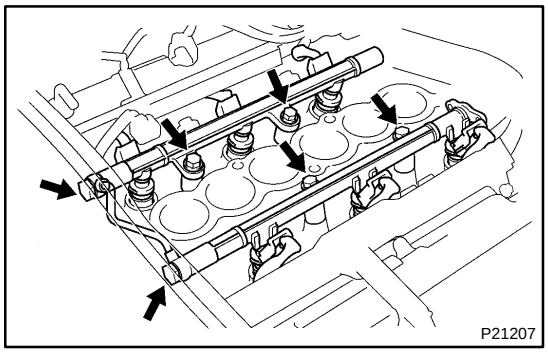

7. REMOVE DELIVERY PIPES AND INJECTORS

NOTICE:

- **Be careful not to drop the injectors when removing the delivery pipes.**
- **Pay attention to put any hung load on the injector to and from the side direction.**

(a) Remove the 4 bolts and delivery pipes together with the 6 injectors.

(b) Remove the 4 spacers from the intake manifold.

(c) Pull out the 6 injectors from the delivery pipes.

(d) Remove the 2 O–rings and insulator from each injector.

KNOCK SENSOR

COMPONENTS

SF05C–07

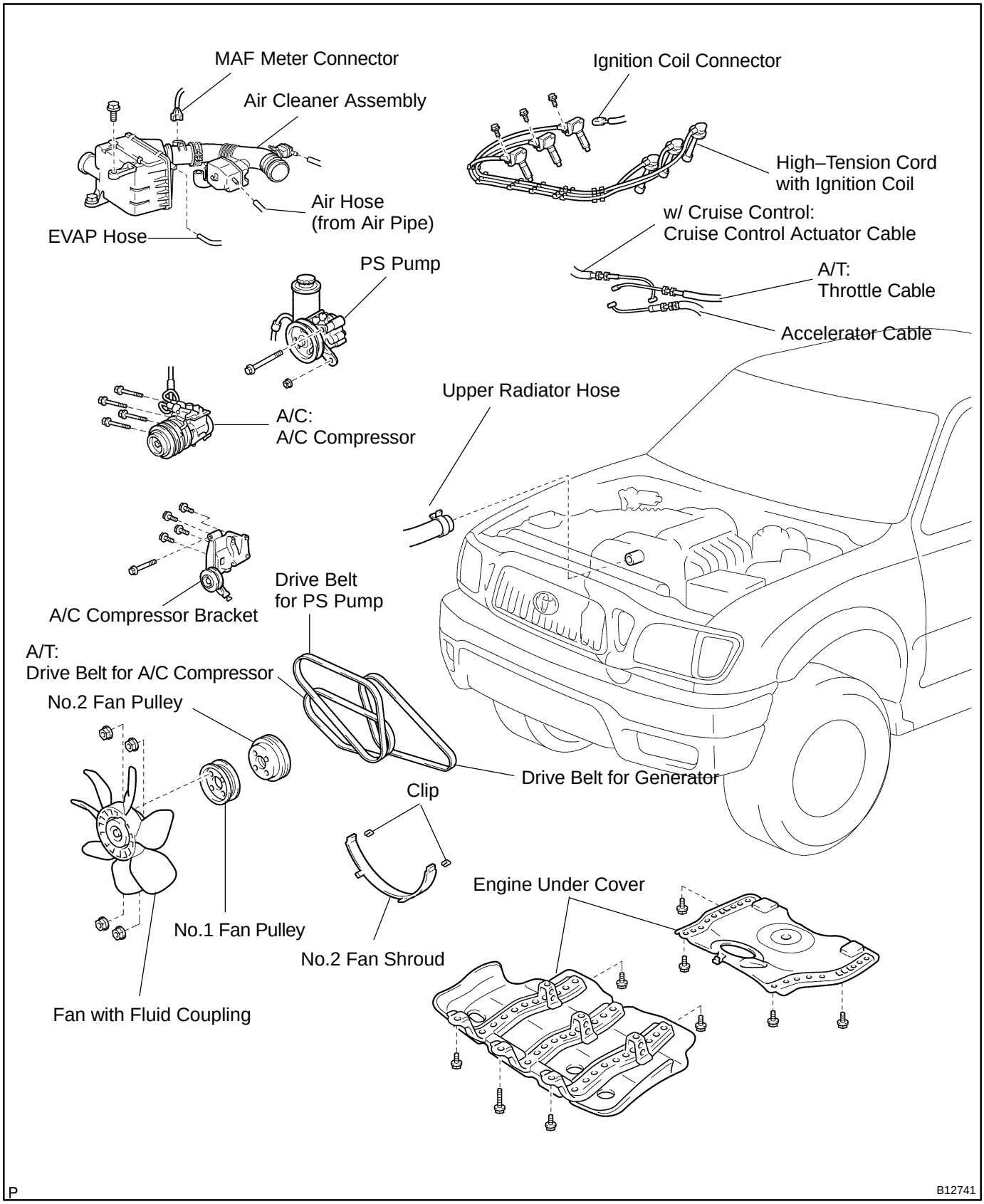

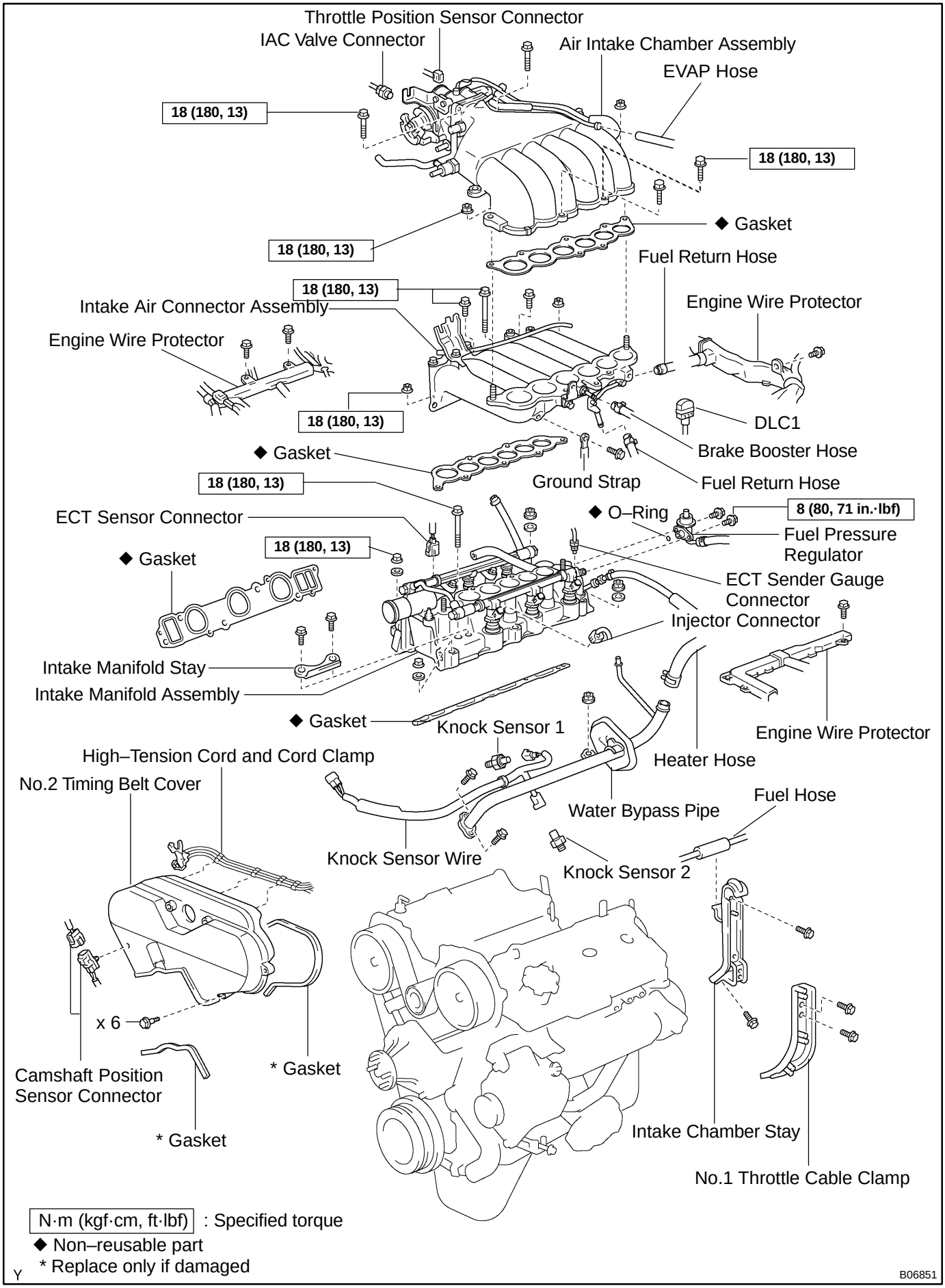
Throttle Position Sensor Connector
IAC Valve Connector
Air Intake Chamber Assembly
EVAP Hose
18 (180, 13)
18 (180, 13)
◆ Gasket
18 (180, 13)
Fuel Return Hose
18 (180, 13)
Intake Air Connector Assembly
Engine Wire Protector
Engine Wire Protector
DLC1
18 (180, 13)
Brake Booster Hose
◆ Gasket
Ground Strap
18 (180, 13)
Fuel Return Hose
ECT Sensor Connector
◆ O–Ring
8 (80, 71 in.·lbf)
Fuel Pressure Regulator
18 (180, 13)
◆ Gasket
ECT Sender Gauge Connector
Injector Connector
Intake Manifold Stay
Intake Manifold Assembly
◆ Gasket
Knock Sensor 1
Engine Wire Protector
High–Tension Cord and Cord Clamp
No.2 Timing Belt Cover
Heater Hose
Water Bypass Pipe
Fuel Hose
Knock Sensor Wire
Knock Sensor 2
x 6
Camshaft Position Sensor Connector
* Gasket
* Gasket
Intake Chamber Stay
No.1 Throttle Cable Clamp
N·m (kgf·cm, ft·lbf) : Specified torque
◆ Non–reusable part
* Replace only if damaged
Y
B06851

SF05D–07

INSPECTION

1. DRAIN ENGINE COOLANT
2. REMOVE AIR CLEANER HOSE
3. REMOVE NO.2 TIMING BELT COVER (See page EM–13)
4. REMOVE INTAKE AIR CONNECTOR ASSEMBLY (See page EM–65)
5. REMOVE FUEL PRESSURE REGULATOR (See page SF–14)
6. REMOVE INTAKE MANIFOLD ASSEMBLY (See page EM–29)
7. REMOVE WATER BYPASS PIPE AND KNOCK SENSOR WIRE (See page EM–29)

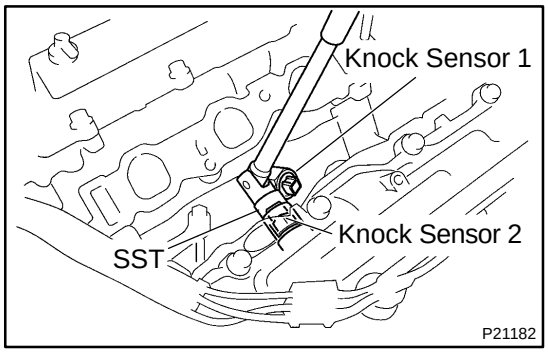

8. REMOVE KNOCK SENSORS

Using SST, remove the knock sensor.

SST 09817–16011

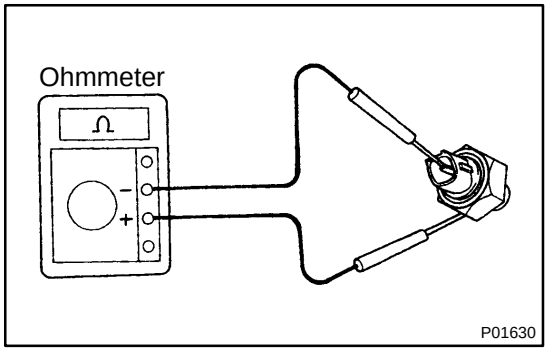

9. INSPECT KNOCK SENSORS

Using an ohmmeter, check that there is no continuity between the terminal and body.

If there is continuity, replace the sensor.

10. REINSTALL KNOCK SENSORS

Using SST, install the knock sensor.

SST 09817–16011

Torque: 39 N·m (400 kgf·cm, 29 ft·lbf)

11. REINSTALL WATER BYPASS PIPE AND KNOCK SENSOR WIRE (See page EM–52)
12. REINSTALL INTAKE MANIFOLD ASSEMBLY (See page EM–38)
13. REINSTALL FUEL PRESSURE REGULATOR (See page SF–15)
14. REINSTALL INTAKE AIR CONNECTOR ASSEMBLY (See page EM–76)
15. REINSTALL NO.2 TIMING BELT COVER (See page EM–19)
16. REINSTALL AIR CLEANER HOSE
17. REFILL WITH ENGINE COOLANT

SF04S–04

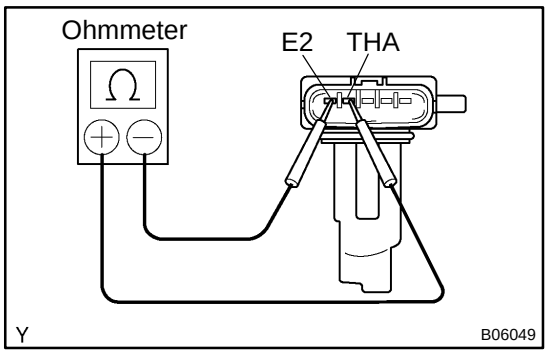

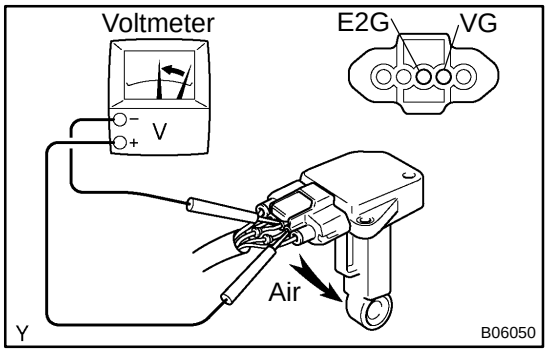

INSPECTION

1. INSPECT MAF METER RESISTANCE

Using an ohmmeter, measure the resistance between terminals THA and E2.

Temperature	Resistance
at –20˚C (–4˚F)	13.6 – 18.4 kΩ
at 20˚C (68˚F)	2.2 – 2.7 kΩ
at 60˚C (140˚F)	0.5 – 0.7 kΩ

If the resistance is not as specified, replace the MAF meter.

2. INSPECT MAF METER OPERATION

(a) Connect the MAF meter connector.

(b) Using a voltmeter, connect the positive (+) tester probe to terminal VG, and negative (–) tester probe to terminal E2G.

(c) Turn the ignition switch ON.

(d) Blow air into the MAF meter, and check that the voltage fluctuates.

If operation is not as specified, replace the MAF meter.

(e) Turn the ignition switch OFF.

(f) Disconnect the MAF meter connector.

SF10B–02

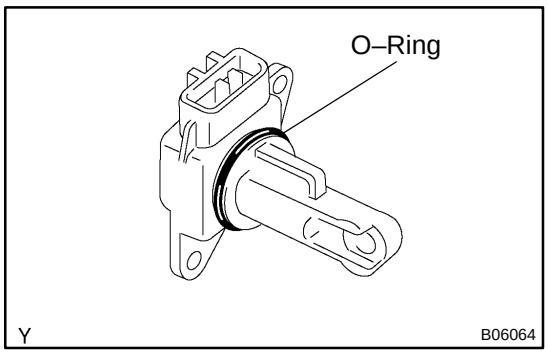

INSTALLATION

1. INSTALL MAF METER

(a) Install the O–ring to the MAF meter.

(b) Install the MAF meter with the 2 screws.

2. INSTALL AIR CLEANER CASE

(a) Install the air cleaner case with the 3 bolts.

(b) Connect the MAF meter connector.

(c) Connect the air cleaner hose.

MASS AIR FLOW (MAF) METER

SF04R–04

REMOVAL

1. REMOVE AIR CLEANER CASE

(a) Disconnect the air cleaner hose.
(b) Disconnect the MAF meter connector.
(c) Remove the 3 bolts and air cleaner case.

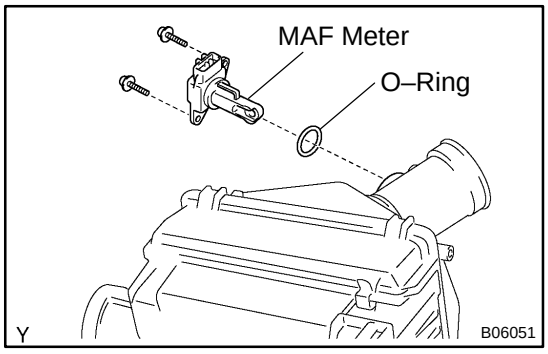

2. REMOVE MAF METER

(a) Remove the 2 screws and MAF meter.
(b) Remove the O–ring from the MAF meter.

SFI SYSTEM

SF1OE–03

PRECAUTION

1. BEFORE WORKING ON FUEL SYSTEM, DISCONNECT NEGATIVE (–) TERMINAL CABLE FROM BATTERY

HINT:

Any diagnostic trouble code retained by the computer will be erased when the negative (–) terminal cable is removed from the battery.

Therefore, if necessary, read the diagnosis before removing the negative (–) terminal cable from the battery.

2. DO NOT SMOKE OR WORK NEAR AN OPEN FLAME WHEN WORKING ON FUEL SYSTEM

3. KEEP GASOLINE AWAY FROM RUBBER OR LEATHER PARTS

4. MAINTENANCE PRECAUTIONS

(a) In the event of engine misfire, these precautions should be taken.
  (1) Check proper connection to battery terminals, etc.
  (2) After repair work, check that the ignition coil terminals and all other ignition system lines are reconnected securely.
  (3) When cleaning the engine compartment, be especially careful to protect the electrical system from water.

(b) Precautions when the handling oxygen sensors.
  (1) Do not allow oxygen sensor to drop or hit against an object.
  (2) Do not allow the sensor to come into contact with water.

5. IF VEHICLE IS EQUIPPED WITH MOBILE RADIO SYSTEM (HAM, CB, ETC.)

If the vehicle is equipped with a mobile communication system, refer to the precaution in the IN section.

6. AIR INDUCTION SYSTEM

(a) Separation of the engine oil dipstick, oil filler cap, PCV hose, etc. may cause the engine to run out of tune.

(b) Disconnection, looseness or cracks in the parts of the air induction system between the throttle body and cylinder head will allow air suction and cause the engine to run out of tune.

7. ELECTRONIC CONTROL SYSTEM

(a) Before removing SFI wiring connectors, terminals, etc., first disconnect the power by either turning the ignition switch OFF or disconnecting the negative (–) terminal cable from the battery.

HINT:

Always check the diagnostic trouble code before disconnecting the negative (–) terminal cable from the battery.

(b) When installing the battery, be especially careful not to incorrectly connect the positive (+) and negative (–) cables.
(c) Do not permit parts to receive a severe impact during removal or installation. Handle all SFI parts carefully, especially the ECM.
(d) Be careful during troubleshooting as there are numerous transistor circuit, and even slight terminal contact can cause further troubles.
(e) Do not open the ECM cover.
(f) When inspecting during rainy weather, take care to prevent entry of water. Also, when washing the engine compartment, prevent water from getting on the SFI parts and wiring connectors.
(g) Parts should be replaced as an assembly.
(h) Care should be taken when pulling out and inserting wiring connectors.
  (1) Release the lock and pull out the connector, pulling on the connectors.
  (2) Fully insert the connector and check that it is locked.

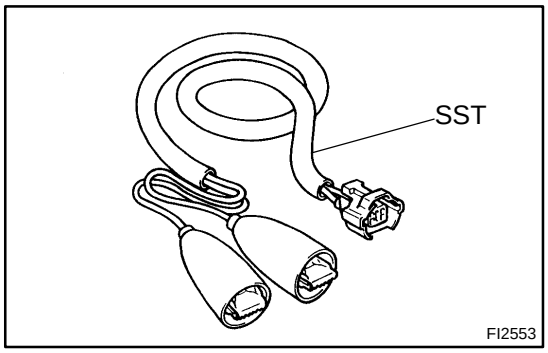

(i) Use SST for inspection or test of the injector or its wiring connector.
SST 09842–30070

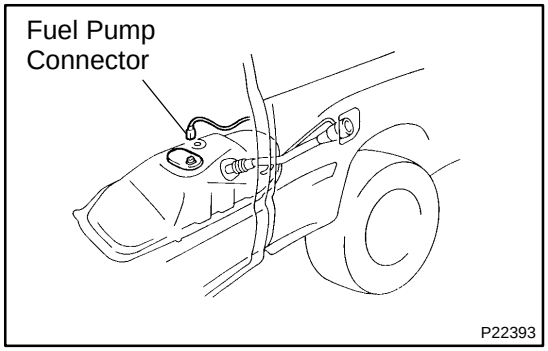

8. FUEL SYSTEM

(a) When disconnecting the high fuel pressure line, a large amount of gasoline will spill out, so observe these procedures:
  (1) Disconnect the fuel pump connector.
  (2) Start the engine. After the engine has stopped on its own, turn the ignition switch OFF.
  (3) Put a container under the connection.
  (4) Slowly loosen the connection.
  (5) Disconnect the connection.
  (6) Plug the connection with a rubber plug.

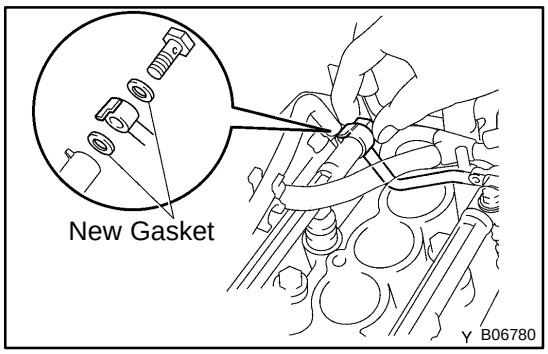

(b) When connecting the union bolt on the high pressure pipe union, observe these procedures:
(1) Always use 2 new gaskets.
(2) Tighten the union bolt by hand.
(3) Tighten the union bolt to the specified torque.
Torque: 34.3 N·m (350 kgf·cm, 25 ft·lbf)

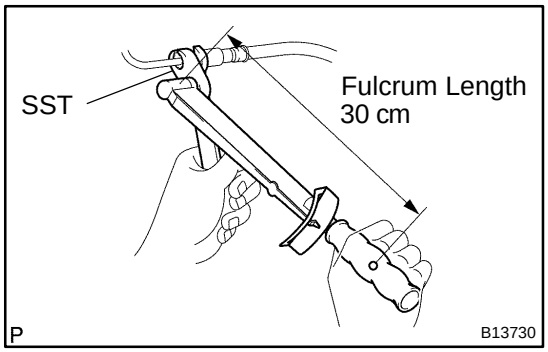

(c) When connecting the flare nut on the high pressure pipe union, observe these procedures:
(1) Apply a light coat of engine oil to the flare and tighten the flare nut by hand.
(2) Using SST, tighten the flare nut to the specified torque.
SST 09023–38400
Torque: 24 N·m (245 kgf·cm, 18 ft·lbf)

HINT:
Use a torque wrench with a fulcrum length of 30 cm (11.81 in.).

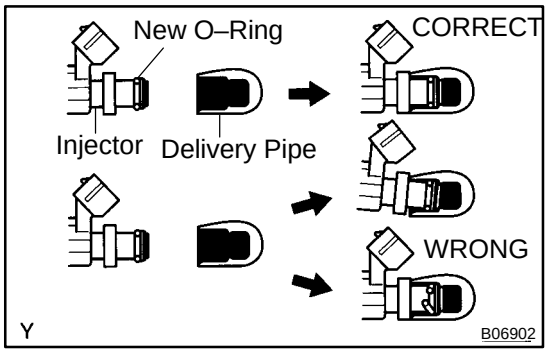

(d) Observe these precautions when removing and installing the injectors.
(1) Never reuse the O–ring.
(2) When placing a new O–ring on the injector, take care not to damage it in any way.
(3) Coat a new O–ring with spindle oil or gasoline before installing–never use engine, gear or brake oil.

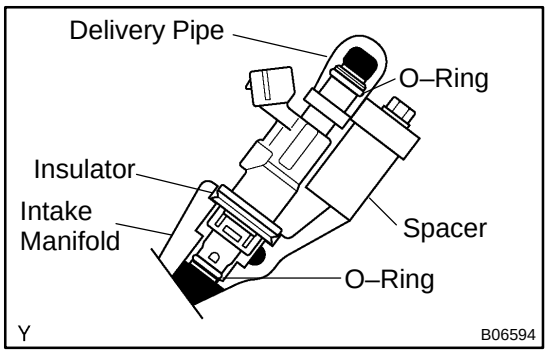

(e) Install the injector to the delivery pipe and intake manifold, as shown in the illustration.

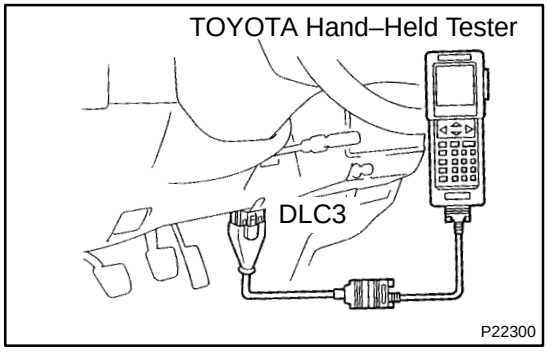

(f) Check that there are no fuel leaks after doing maintenance anywhere on the fuel system.
(1) Connect a TOYOTA hand–held tester to the DLC3.
(2) Turn the ignition switch ON and push TOYOTA hand–held tester main switch ON.

NOTICE:
Do not start the engine.

(3) Select the ACTIVE TEST mode on the TOYOTA hand–held tester.

(4) Please refer to the TOYOTA hand–held tester operator's manual for further details.

(5) If you have no TOYOTA hand–held tester, connect the positive (+) and negative (–) leads from the battery to the fuel pump connector.
(See page SF–5)

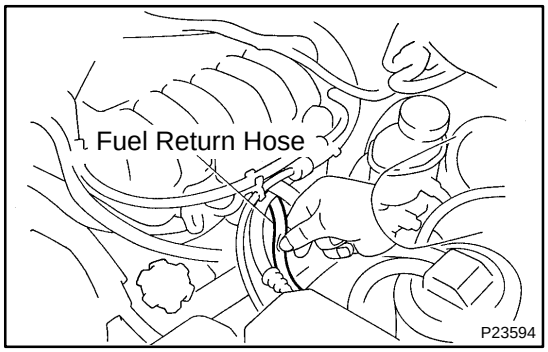

(6) Pinch the fuel return hose.
The pressure in the high pressure line will rise to approx. 400 kPa (4 kgf/cm^2, 57 psi). In this state, check to see that there are no leaks from any part of the fuel system.

NOTICE:
Always pinch the hose. Avoid bending as it may cause the hose to crack.

(7) Turn the ignition switch OFF.

(8) Disconnect the TOYOTA hand–held tester from the DLC3.

SF02A–07

COMPONENTS

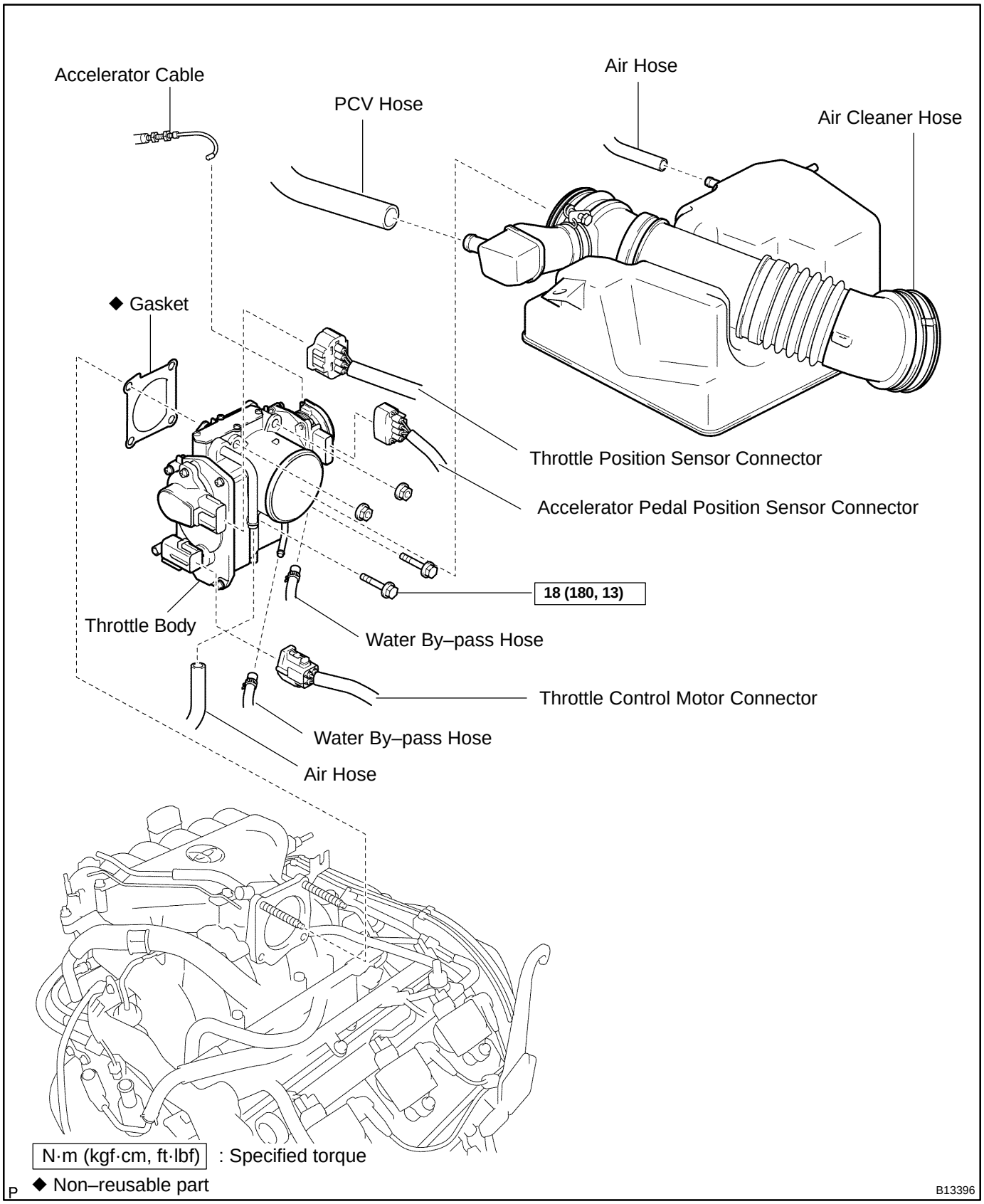

SF1NX–02

INSTALLATION

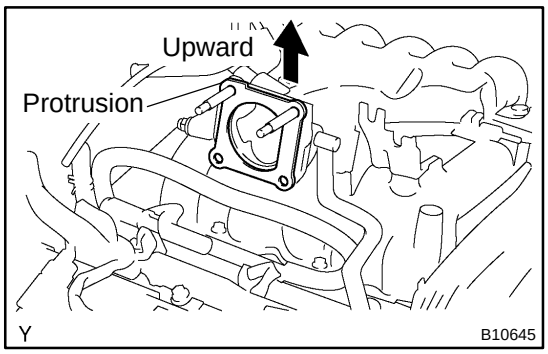

1. INSTALL THROTTLE BODY

(a) Place a new gasket on the air intake chamber facing the protrusion upward.

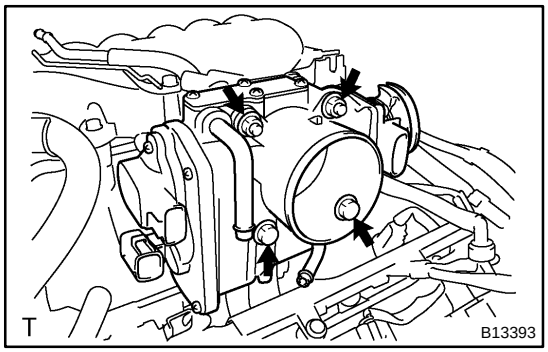

(b) Install the throttle body with the 2 bolts and 2 nuts.
Torque: 18 N·m (180 kgf·cm, 13 ft·lbf)

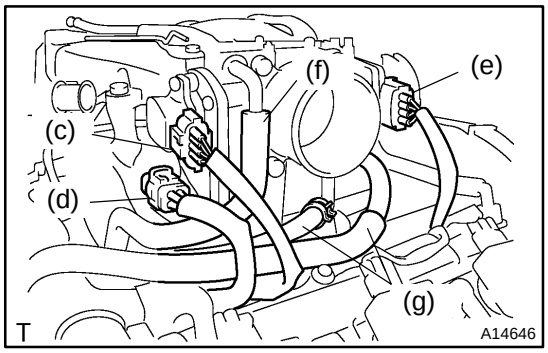

(c) Connect the throttle position sensor connector.
(d) Connect the throttle control motor connector.
(e) Connect the accelerator pedal position sensor connector.
(f) Connect the air hose.
(g) Connect the 2 water bypass hoses.

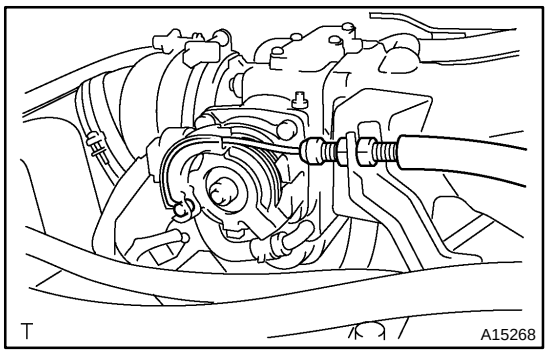

2. CONNECT ACCELERATOR CABLE TO THROTTLE BODY
3. INSTALL AIR CLEANER HOSE
4. FILL WITH ENGINE COOLANT
5. START ENGINE AND CHECK FOR COOLANT LEAKS

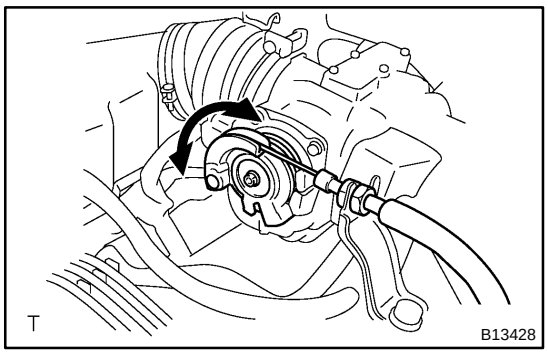

THROTTLE BODY (w/ ETCS–i)

SF029–06

ON–VEHICLE INSPECTION

1. INSPECT SYSTEM OPERATION

(a) Check that the throttle linkage moves smoothly.

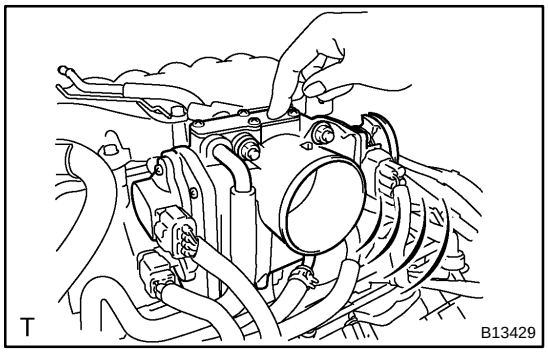

(b) Inspect the throttle control motor for operating sound.
  (1) Turn the ignition switch ON.
  (2) When turning the accelerator pedal position sensor lever, check the running sound of the motor. Also, check that there is no friction sound.

If operation is not as specified, check the throttle control motor (See step 2), wiring and ECM.

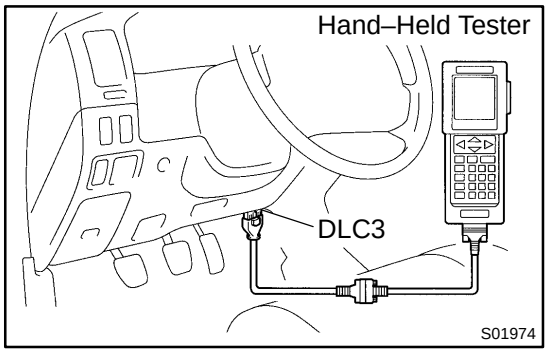

(c) Inspect the accelerator pedal position sensor.
  (1) Connect the hand–held tester to the DLC3.
  (2) Check that the MIL does not light up.
  (3) When turning the accelerator pedal position sensor lever to the full–open position, check that the throttle valve opening percentage (THROTTLE POS) of the CURRENT DATA showns the standard value.

  Standard throttle valve opening percentage:
  60 % or more

If operation is not as specified, check that the accelerator pedal position sensor (See step 5), wiring and ECM.

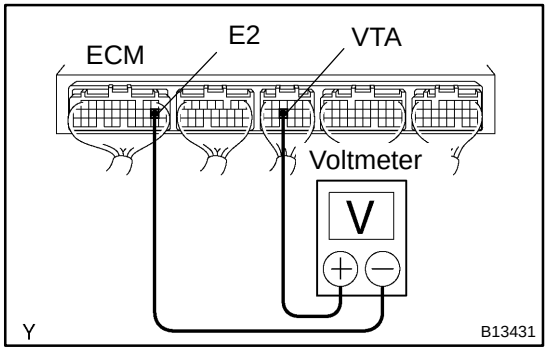

If you have no hand–held tester, measure voltage between terminals VTA and E2 of the ECM connector.

(d) Inspect the idle speed.
  (1) Start the engine and check that the MIL does not light up.
  (2) Allow the engine to warm up to normal operating temperature.
  (3) Turn the A/C compressor ON to OFF, and check the idle speed.

  Idle speed (Transmission in neutral): 700 ± 50 rpm

NOTICE:

Perform inspection under condition without electrical load.

(e) After checking the above (b) to (d), perform the driving test and check that there is no sense of incongruity.

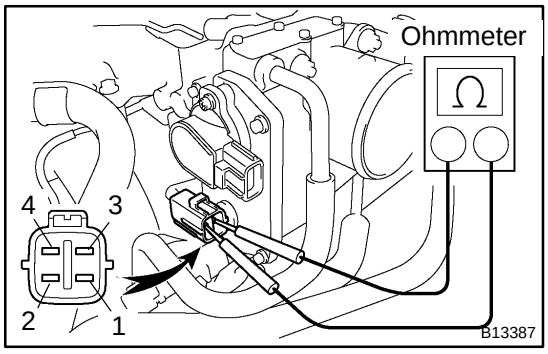

2. INSPECT THROTTLE CONTROL MOTOR

(a) Disconnect the throttle control motor connector.

(b) Using an ohmmeter, measure the motor resistance between terminal 4 (M+) and 3 (M–).

Motor resistance: 0.3 – 100 Ω at 20˚C (68˚F)

If the resistance is not as specified, replace the throttle body (See page SF–31 and SF–32).

(c) Using an ohmmeter, measure the clutch resistance between terminal 2 (CL–) and 1 (CL+).

Clutch resistance: 4.2 – 5.2 Ω at 20˚C (68˚F)

If the resistance is not as specified, replace the throttle body (See page SF–31 and SF–32).

(d) Reconnect the throttle control motor connector.

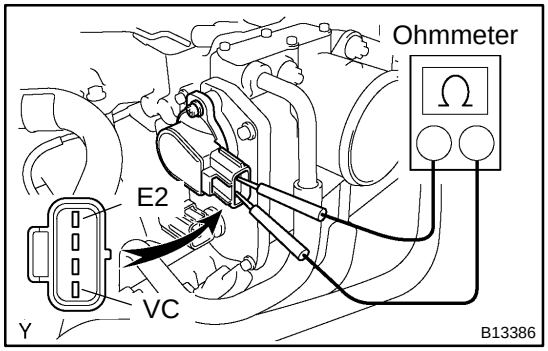

3. INSPECT THROTTLE POSITION SENSOR

(a) Disconnect the throttle position sensor connector.

(b) Using an ohmmeter, measure the resistance between terminals VC and E2.

Resistance: 1.2 – 3.2 kΩ at 20˚C (68˚F)

If the resistance is not as specified, replace the throttle body (See page SF–31 and SF–32).

(c) Reconnect the throttle position sensor connector.

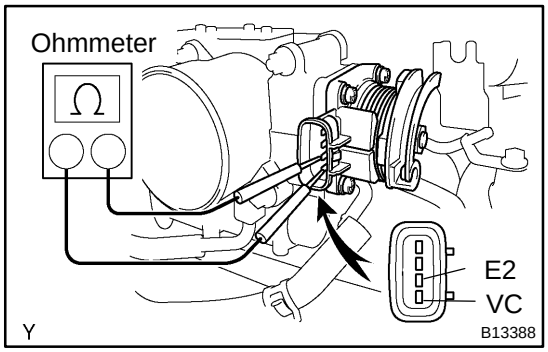

4. INSPECT ACCELERATOR PEDAL POSITION SENSOR

(a) Disconnect the pedal position sensor connector.

(b) Using an ohmmeter, measure the resistance between terminals VC and E2.

Resistance: 1.2 – 3.2 kΩ at 20˚C (68˚F)

If the resistance is not as specified, replace the throttle body (See page SF–31 and SF–32).

(c) Reconnect the pedal position sensor connector.

SF1NW–02

REMOVAL

1. DRAIN ENGINE COOLANT

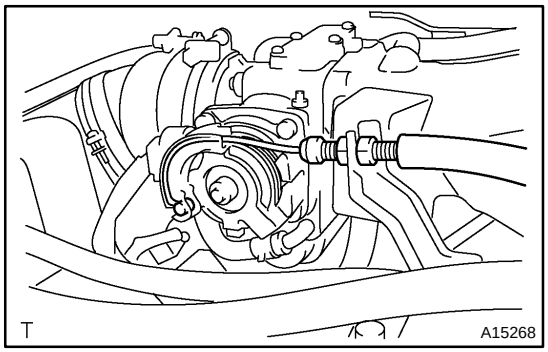

2. DISCONNECT ACCELERATOR CABLE FROM THROTTLE BODY

3. REMOVE AIR CLEANER HOSE

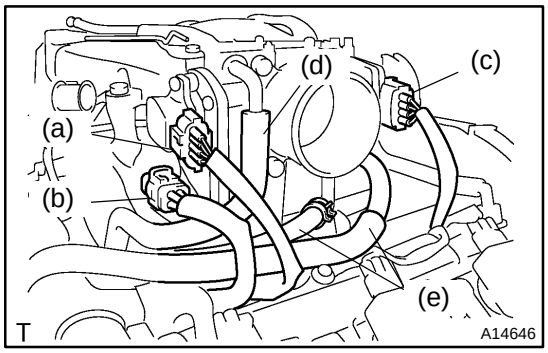

4. REMOVE THROTTLE BODY

(a) Disconnect the throttle position sensor connector.

(b) Disconnect the throttle control motor connector.

(c) Disconnect the accelerator pedal position sensor connector.

(d) Disconnect the air hose.

(e) Disconnect the 2 water bypass hoses.

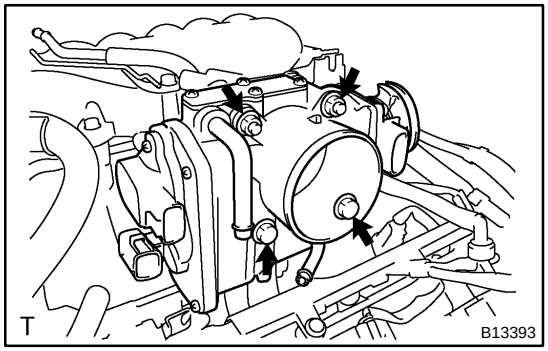

(f) Remove the 2 bolts, 2 nuts, throttle body and gasket.

SF04V–07

COMPONENTS

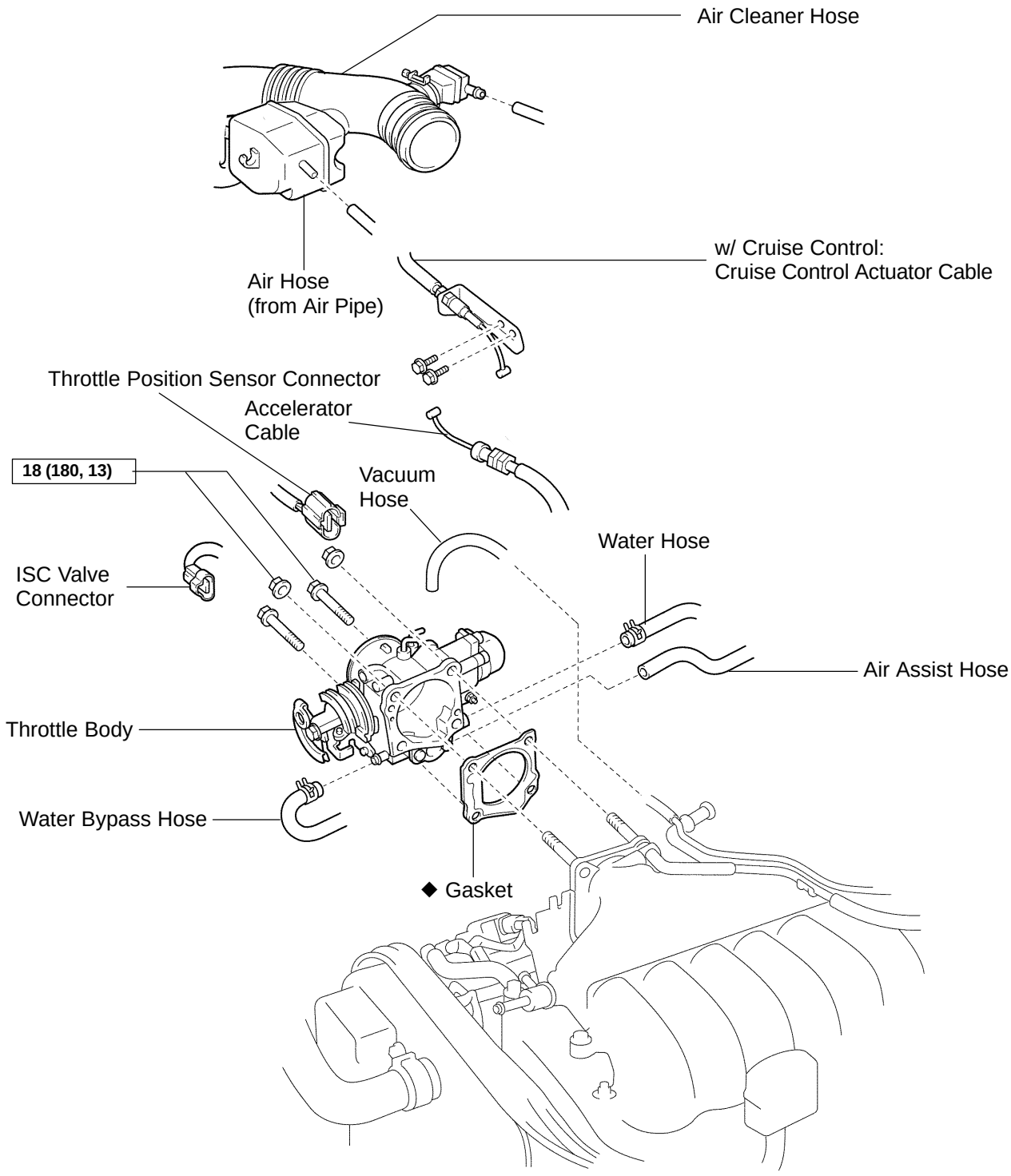

N·m (kgf·cm, ft·lbf) : Specified torque
◆ Non–reusable part

P

B13546

SF04X–06

INSPECTION

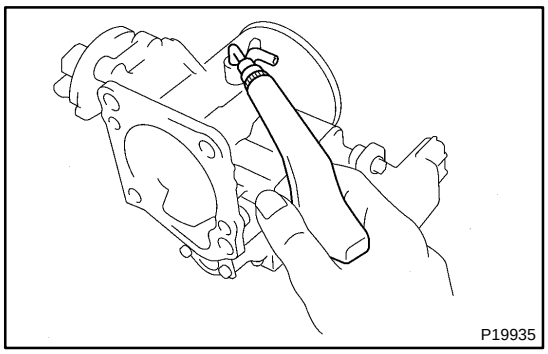

1. CLEAN THROTTLE BODY

(a) Using a soft brush and carburetor cleaner, clean the cast parts.

(b) Using compressed air, clean all the passages and apertures.

NOTICE:

To prevent deterioration, do not clean the throttle position sensor and IAC valve.

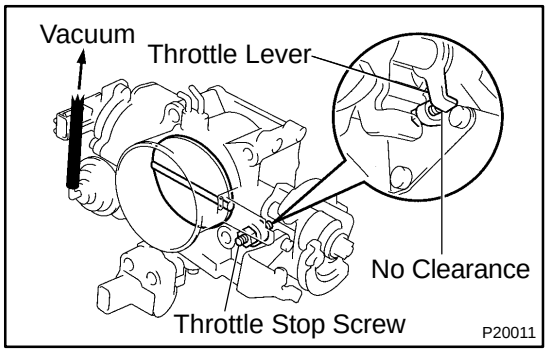

2. INSPECT THROTTLE VALVE

(a) Apply vacuum to the throttle opener.

(b) Check that there is no clearance between the throttle stop screw and throttle lever when the throttle valve is fully closed.

Throttle valve fully closed angle: 10°

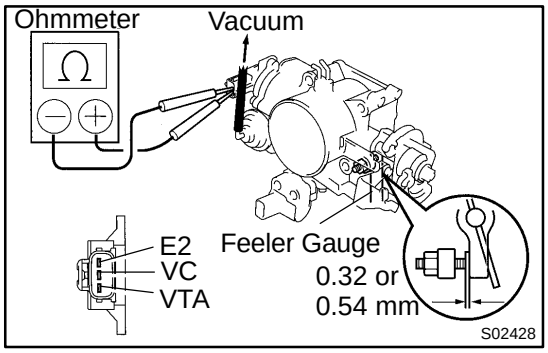

3. INSPECT THROTTLE POSITION SENSOR

(a) Apply vacuum to the throttle opener.

(b) Insert a feeler gauge between the throttle stop screw and stop lever.

(c) Using an ohmmeter, measure the resistance between each terminal.

Clearance between lever and stop screw	Between terminals	Resistance
0 mm (0 in.)	VTA – E2	0.2 – 5.7 kΩ
Throttle valve fully open	VTA – E2	2.0 – 10.2 kΩ
–	VC – E2	2.5 – 5.9 kΩ

SF10E–03

INSTALLATION

Installation is in the reverse order of removal (See page SF–36).

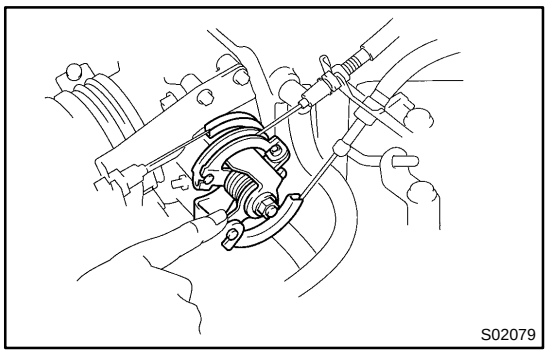

THROTTLE BODY (w/o ETCS–i)

SF10C–03

ON–VEHICLE INSPECTION

1. INSPECT THROTTLE BODY

Check that the throttle linkage moves smoothly.

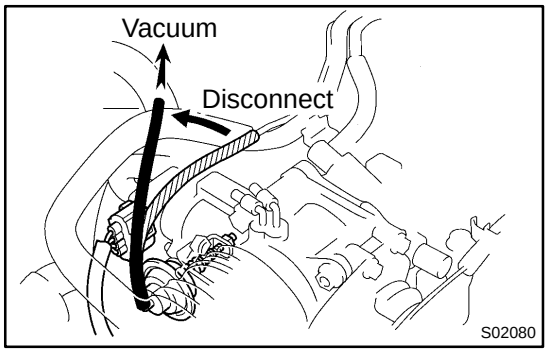

2. INSPECT THROTTLE POSITION SENSOR

(a) Apply vacuum to the throttle opener.

(b) Disconnect the sensor connector.

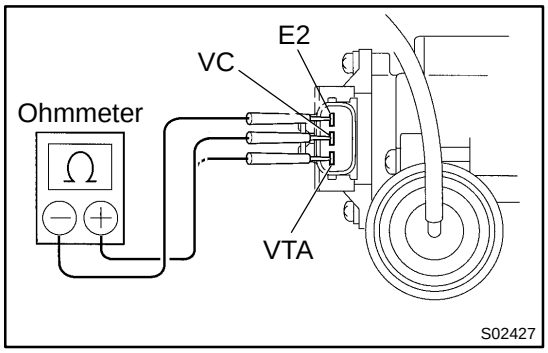

(c) Using an ohmmeter, measure the resistance between each terminal.

Throttle valve condition	Between terminals	Resistance
Fully closed	VTA – E2	0.2 – 5.7 kΩ
Fully open	VTA – E2	2.0 – 10.2 kΩ
–	VC – E2	2.5 – 5.9 kΩ

(d) Reconnect the sensor connector.

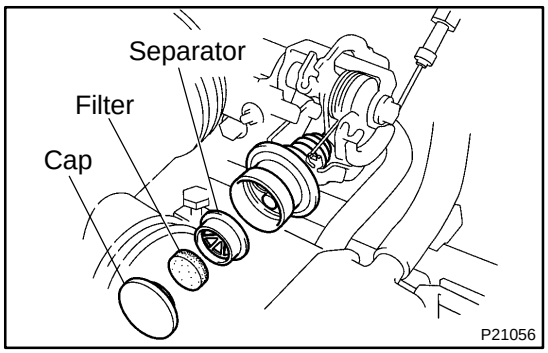

3. INSPECT DASHPOT (DP)

(a) Allow the engine to warm up to normal operating temperature.

(b) Check the idle speed.

Idle speed: 700 ± 50 rpm

(c) Remove the cap, filter and separator from the DP.

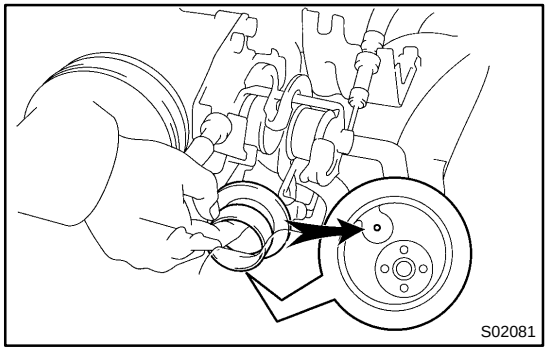

(d) Maintain the engine speed at 2,500 rpm or more.

(e) Plug the VTV hole with your finger.

(f) Release the throttle valve.

(g) Check the DP is set.

DP setting speed: 1,800 – 2,200 rpm

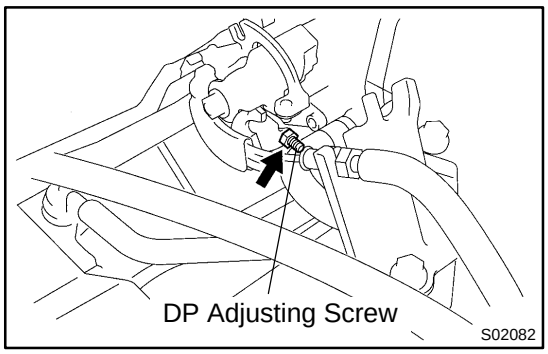

(h) If the setting speed is not as specified, adjust it with the DP adjusting screw.
(i) Remove your finger from the hole and check that the engine returns to the idle speed in approx. 1 second.
(j) Reinstall the DP separator, filter and cap.

HINT:

Install the filter with the coarser surface facing the atmospheric side (outward).

4. INSPECT THROTTLE OPENER

(a) Allow the engine to warm up to normal operating temperature.
(b) Check the idle speed.
Idle speed: 700 ± 50 rpm

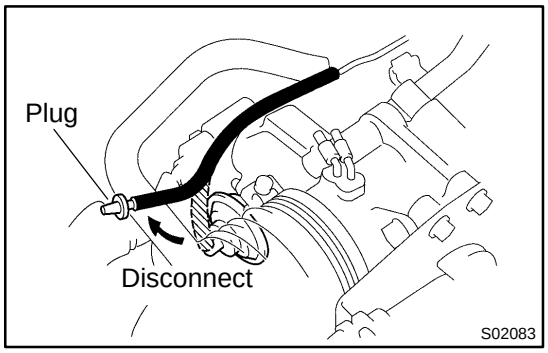

(c) Disconnect the vacuum hose from the throttle opener, and plug the hose end.
(d) Check the throttle opener setting speed.
Throttle opener setting speed: 900 – 1,950 rpm

If the throttle opener setting is not as specified, replace the throttle body.

(e) Stop the engine.
(f) Reconnect the vacuum hose to the throttle opener.
(g) Start the engine and check that the idle speed returns to the correct speed.

SF10D–04

REMOVAL

1. DRAIN ENGINE COOLANT

2. DISCONNECT CABLES:

(a) w/ Cruise Control:
Disconnect the cruise control actuator cable.

(b) Disconnect the accelerator cable.

(c) A/T:
Disconnect the throttle cable.

3. REMOVE AIR CLEANER HOSE

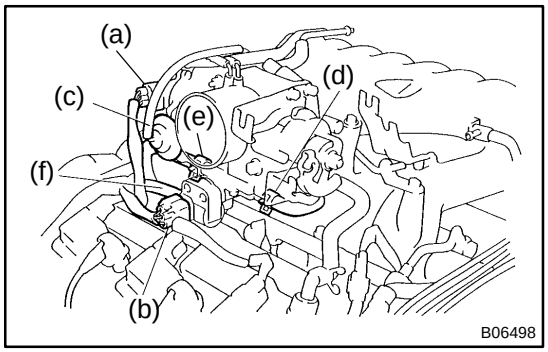

4. REMOVE THROTTLE BODY

(a) Disconnect the throttle position sensor connector.

(b) Disconnect the IAC valve connector.

(c) Disconnect the vacuum hose for the throttle opener.

(d) Disconnect the water bypass hose (from water bypass pipe).

(e) Disconnect the water hose (from intake manifold).

(f) Disconnect the air assist hose.

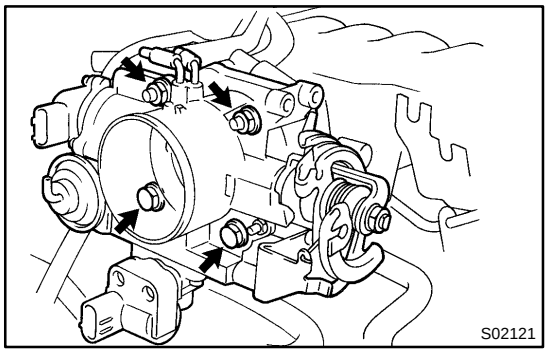

(g) Remove the 2 bolts, 2 nuts, throttle body and gasket.
Torque: 18 N·m (180 kgf·cm, 13 ft·lbf)

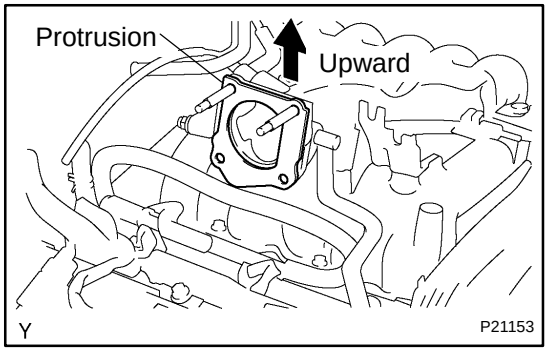

HINT:
At the time of installation, plaese refer to the following items. Place a new gasket on the air intake chamber facing the protrusion upward.

VSV FOR CANISTER CLOSED VALVE (CCV)

SF1T7–01

INSPECTION

1. REMOVE VSV (See page SF–48)

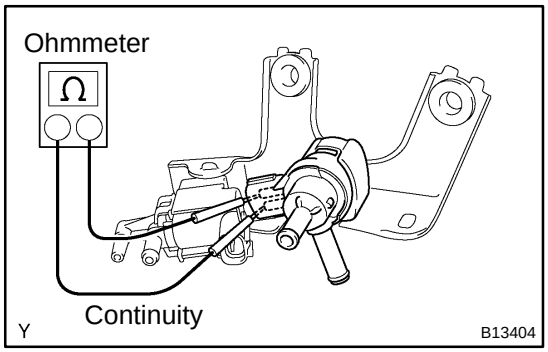

2. INSPECT VSV FOR OPEN CIRCUIT

Using an ohmmeter, check that there is continuity between the terminals.

Resistance:

At 20˚C (68˚F)	25 – 30 Ω
At 120˚C (248˚F)	33 – 42 Ω

If there is no continuity, replace the VSV.

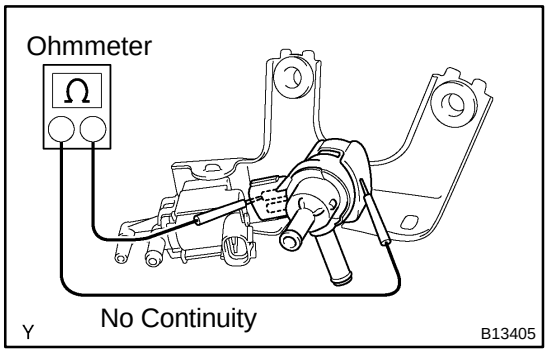

3. INSPECT VSV FOR GROUND

Using an ohmmeter, check that there is no continuity between each terminal and the body.

If there is continuity, replace the VSV.

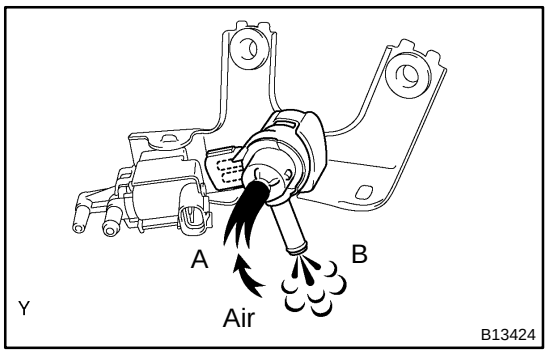

4. INSPECT VSV OPERATION

(a) Check that air flows from ports A to B.

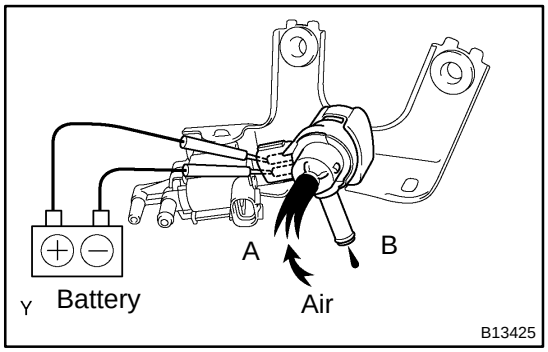

(b) Apply battery positive voltage across the terminals.

(c) Check that air does not flow from ports A to B.

If operation is not as specified, replace the VSV.

5. REINSTALL VSV

VSV FOR EVAPORATIVE EMISSION (EVAP)

COMPONENTS

SF1T5–01

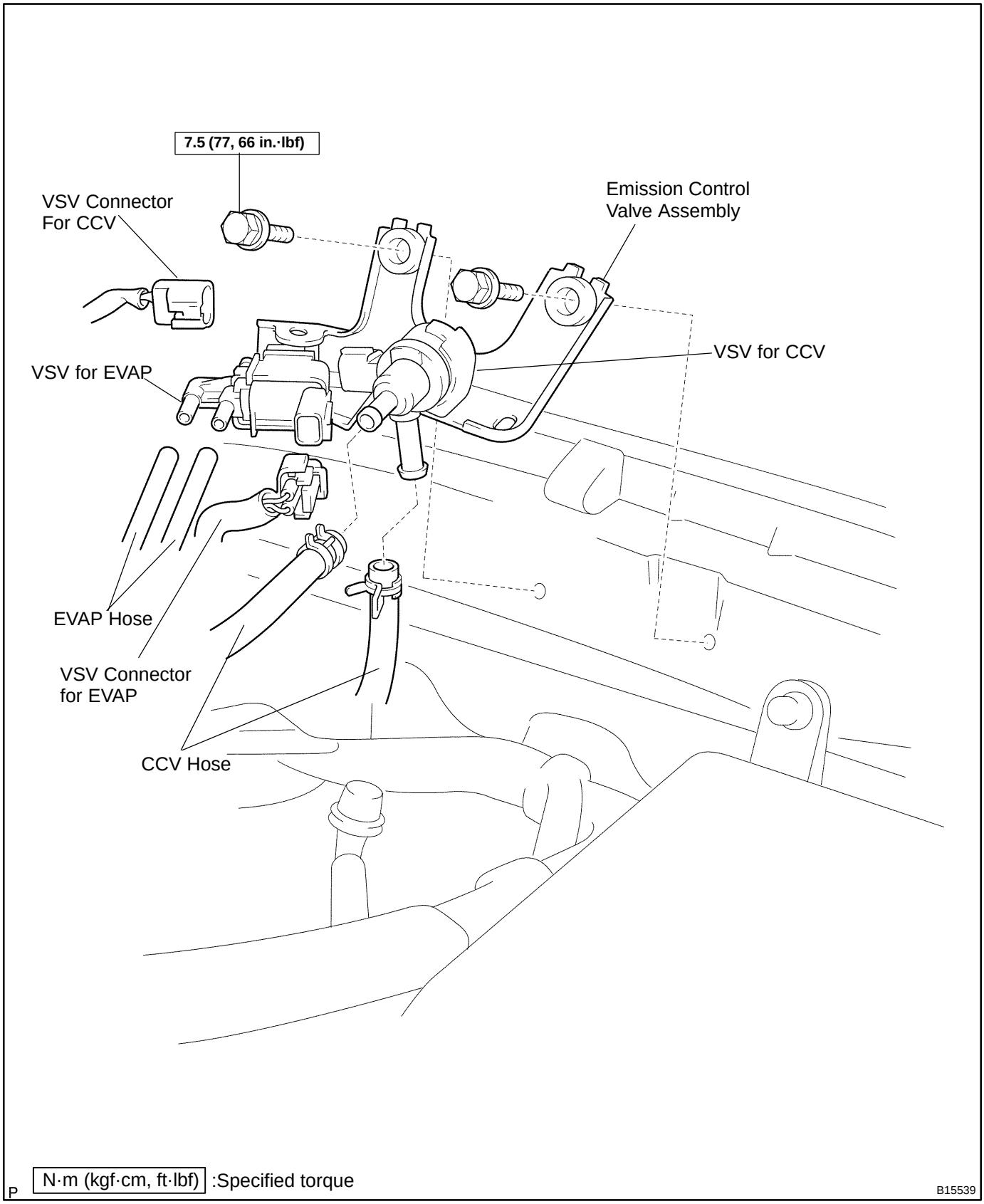

SF1T6–01

INSPECTION

1. REMOVE VSV

2. INSPECT VSV

(a) Inspect the VSV for open circuit.

Using an ohmmeter, check that there is continuity between the terminals.

Resistance: 30 – 34 Ω at 20˚C (68˚F)

If there is no continuity, replace the VSV.

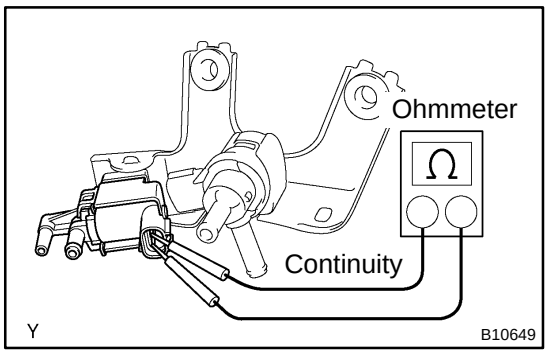

(b) Inspect VSV for ground.

Using an ohmmeter, check that there is no continuity between each terminal and the body.

If there is continuity, replace the VSV.

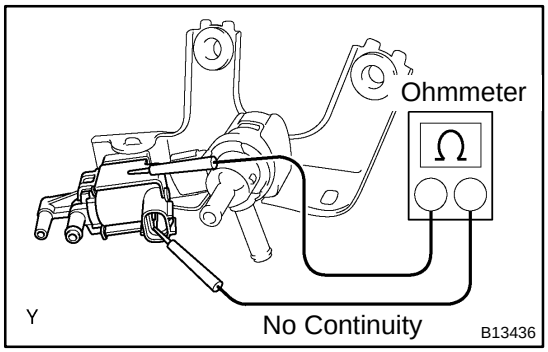

(c) Inspect the VSV opration.

(1) Check that air does not flow from port E to port F.

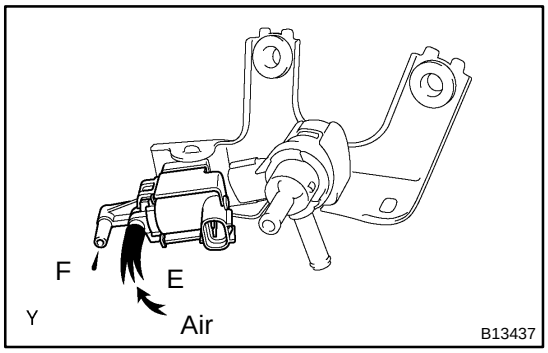

(2) Apply battery positive voltage across the terminals.

(3) Check that air flows from port E to port F.

If operation is not as specified, replace the VSV.

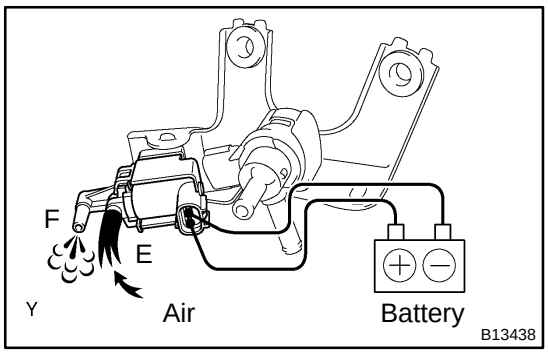

3. REINSTALL VSV

4. REMOVE VSV

(a) Disconnect the connector and 2 EVAP hoses.

(b) Remove the screw and VSV.

VSV FOR PRESSURE SWITCHING VALVE

SF1T8–01

COMPONENTS

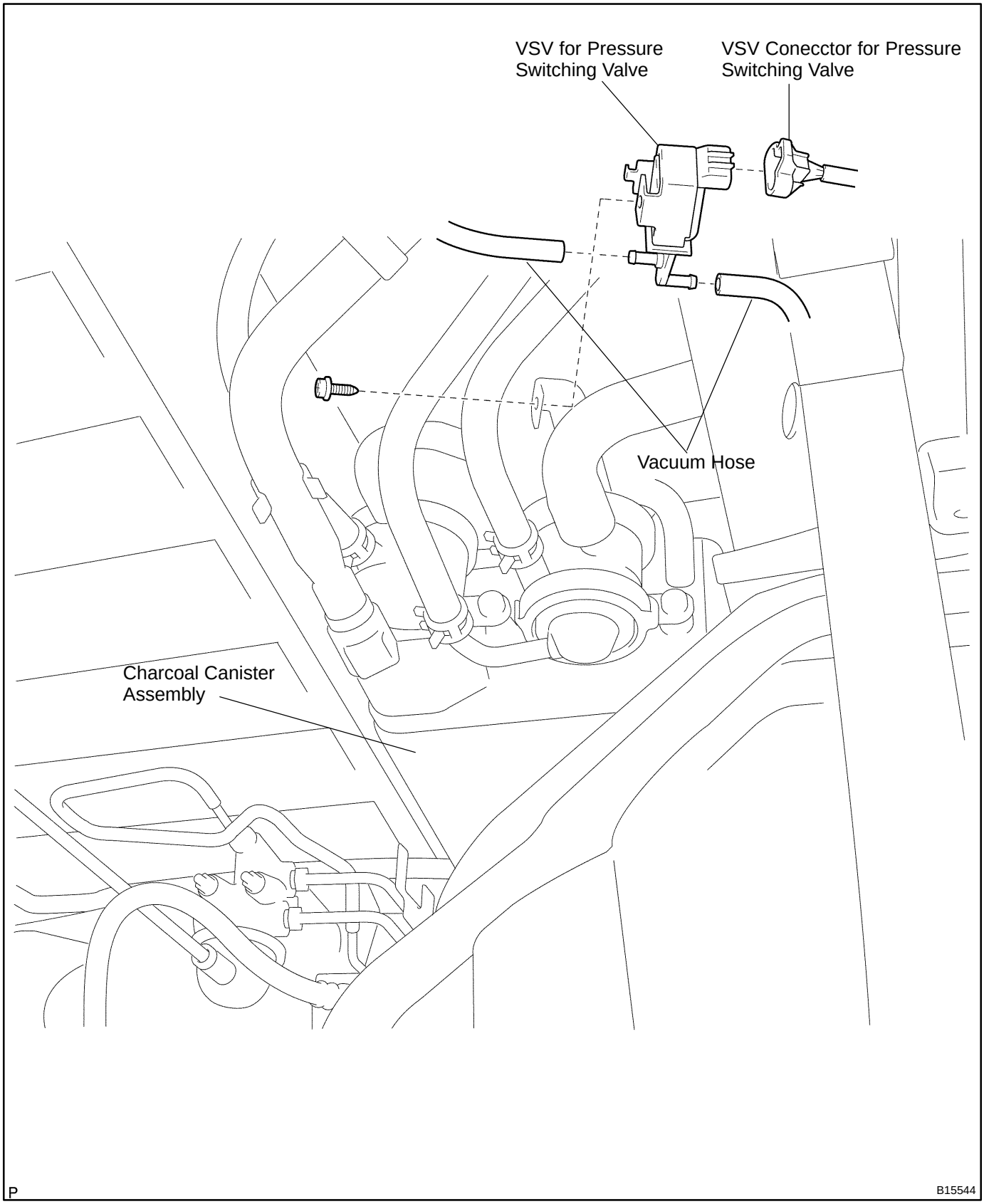

SF1T9–01

INSPECTION

1. REMOVE VSV

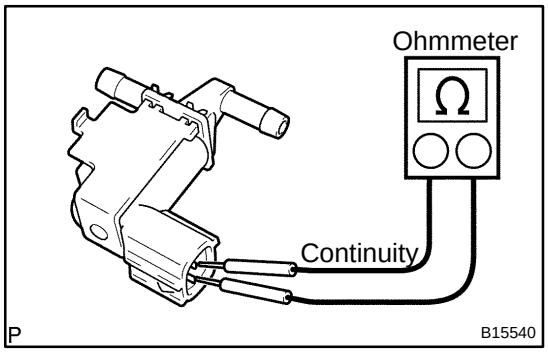

2. INSPECT VSV FOR OPEN CIRCUIT

Using an ohmmeter, check that there is continuity between the terminals.

Resistance:

At 20°C (68°F)	30 – 36 Ω

If there is no continuity, replace the VSV.

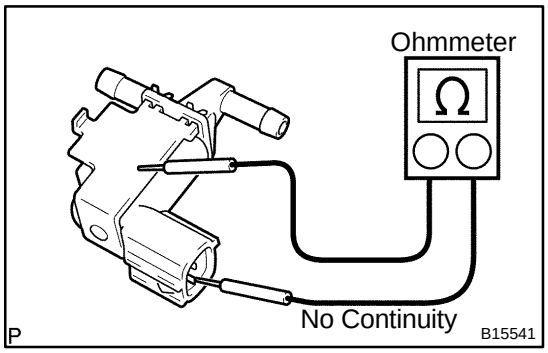

3. INSPECT VSV FOR GROUND

Using an ohmmeter, check that there is no continuity between each terminal and the body.

If there is continuity, replace the VSV.

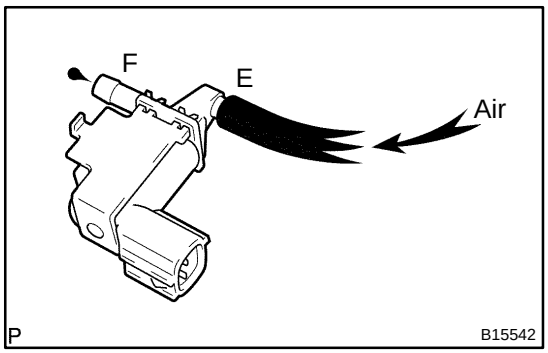

4. INSPECT VSV OPERATION

(a) Check that air does not flow from ports E to F.

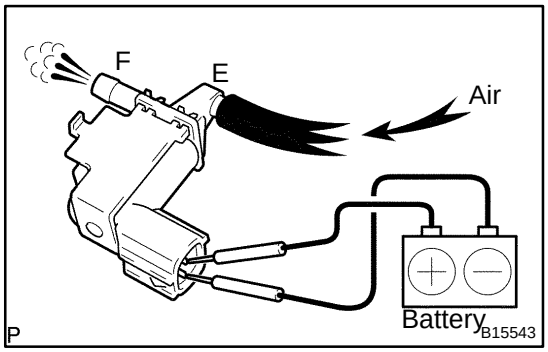

(b) Apply battery positive voltage across the terminals.

(c) Check that air flows from ports E to F.

If operation is not as specified, replace the VSV.

5. REINSTALL VSV

(a) Disconnect the connector and 2 vacuum hoses.

(b) Remove the bolt and VSV.

6. REMOVE VSV

(a) Disconnect the connector and 3 EVAP hoses from the VSV.

(b) Remove the bolt and VSV.

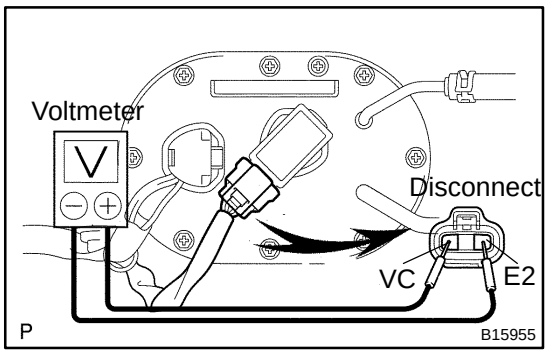

VAPOR PRESSURE SENSOR INSPECTION

SF05L–07

1. INSPECT POWER SOURCE VOLTAGE OF VAPOR PRESSURE SENSOR

(a) Disconnect the vapor pressure sensor connector.

HINT:

Near the fuel tank.

(b) Turn the ignition switch ON.

(c) Using a voltmeter, measure the voltage between connector terminals VC and E2 of the wiring harness side.

Voltage: 4.5 – 5.5 V

(d) Turn the ignition switch OFF.

(e) Reconnect the vapor pressure sensor connector.

2. INSPECT POWER OUTPUT OF VAPOR PRESSURE SENSOR

(a) Turn the ignition switch ON.

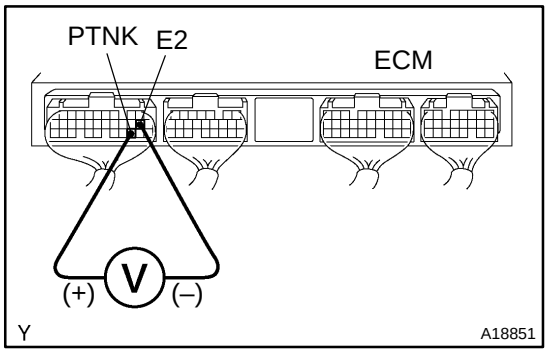

(b) Connect a voltmeter to terminals PTNK and E2, and measure the output voltage.

Voltage: 3.0 – 3.6 V

2RZ–FE, 3RZ–FE Vacuum Hose

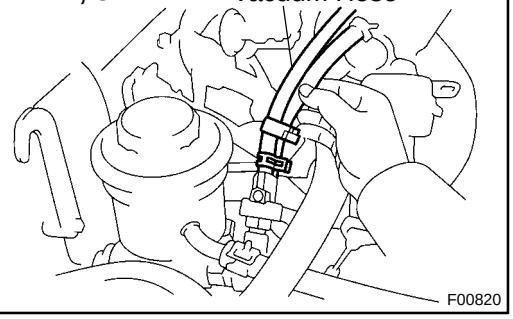

AIR CONTROL VALVE

SR047–03

INSPECTION

1. TURN AIR CONDITIONING SWITCH OFF

2. CHECK IDLE–UP

(a) Start engine and run it at idle.

(b) Fully turn the steering wheel.

(c) Check that the engine speeds decreases when the vacuum hose of the air control valve is pinched.

(d) Check that the engine speeds increases when the hose is released.

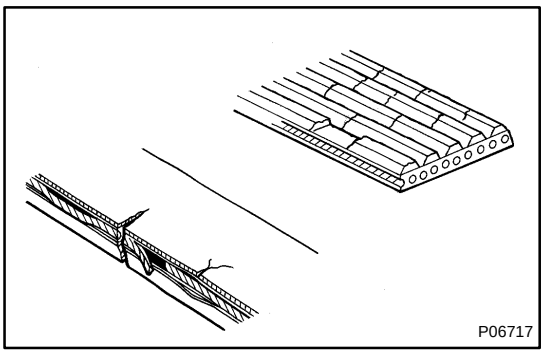
P06717

DRIVE BELT

SR044–03

INSPECTION

INSPECT DRIVE BELT

(a) Visually check the belt for excessive wear, frayed cords, etc.

If any defect has been found, replace the drive belt.

HINT:

Cracks on the rib side of a belt are considered acceptable. If the belt has chunks missing from the ribs, it should be replaced.

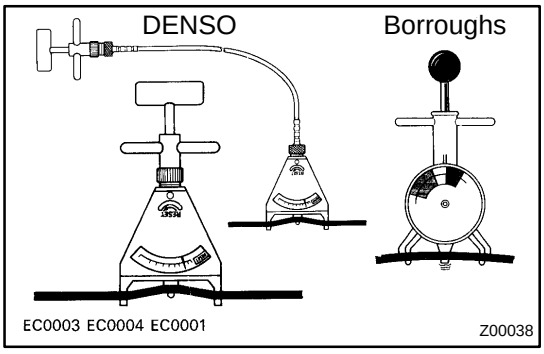

(b) Using a belt tension gauge, measure the belt tension.
Belt tension gauge:
DENSO BTG–20 (95506–00020)
Borroughs No. BT–33–73F
Drive belt tension:
New belt: 135 – 180 lbf
Used belt: 85 – 120 lbf

If the belt tension is not as specified, adjust it.

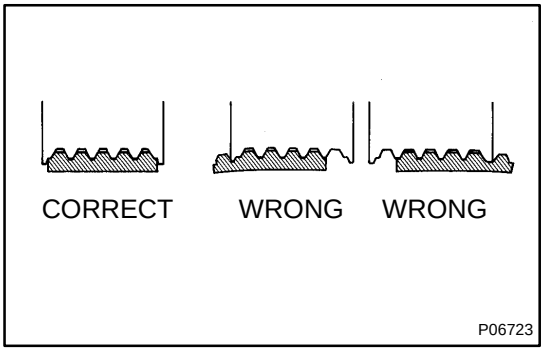

HINT:

- ”New belt” refers to a belt which has been used less than 5 minutes on a running engine.
- ”Used belt” refers to a belt which has been used on a running engine for 5 minutes or more.
- After installing a belt, check that it fits properly in the ribbed grooves.
- Check with your hand to confirm that the belt has not slipped out of the groove on the bottom of the pulley.
- After installing a new belt, run the engine for about 5 minutes and recheck the belt tension.

NON–TILT STEERING COLUMN

COMPONENTS

SR1EF–01

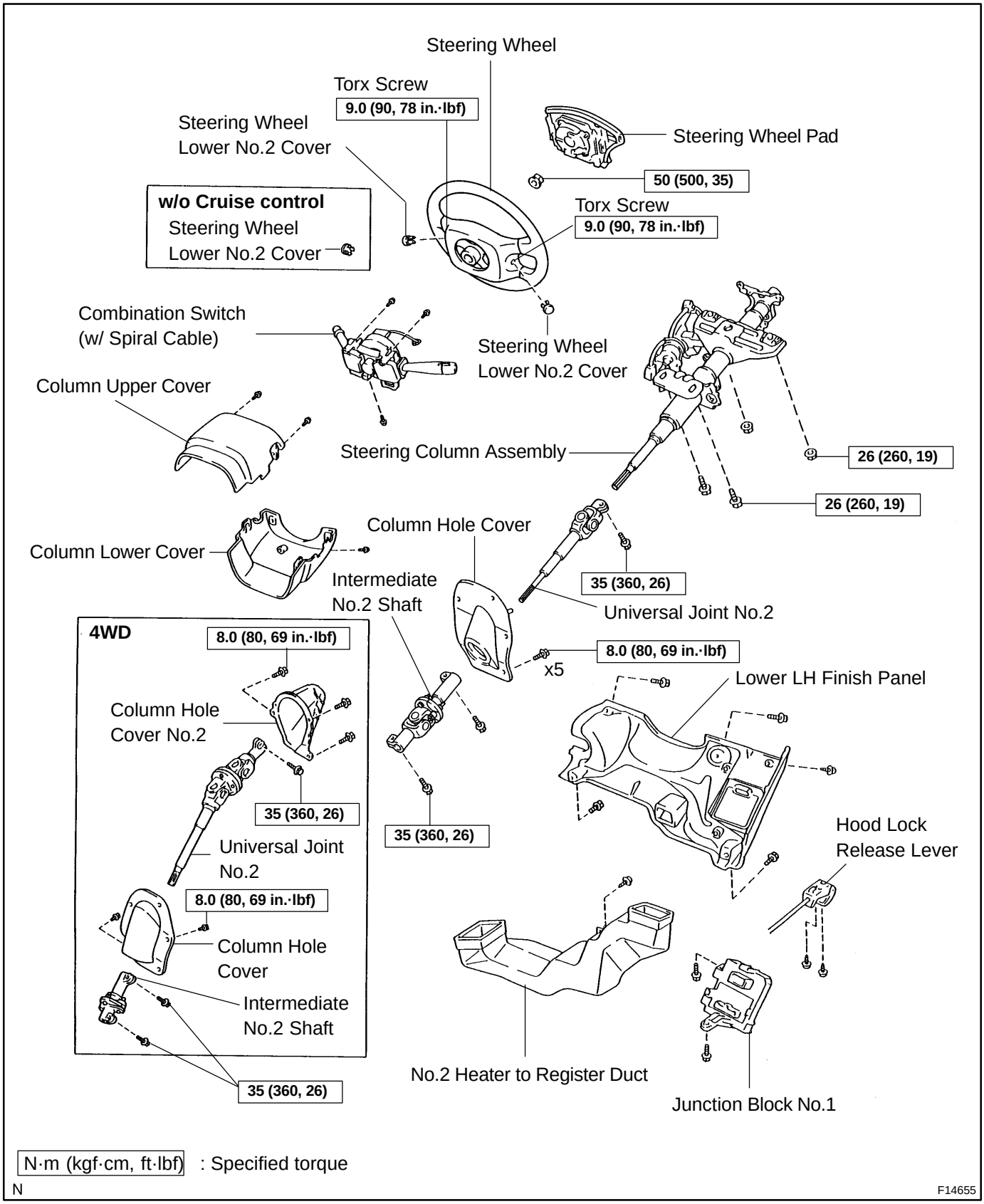

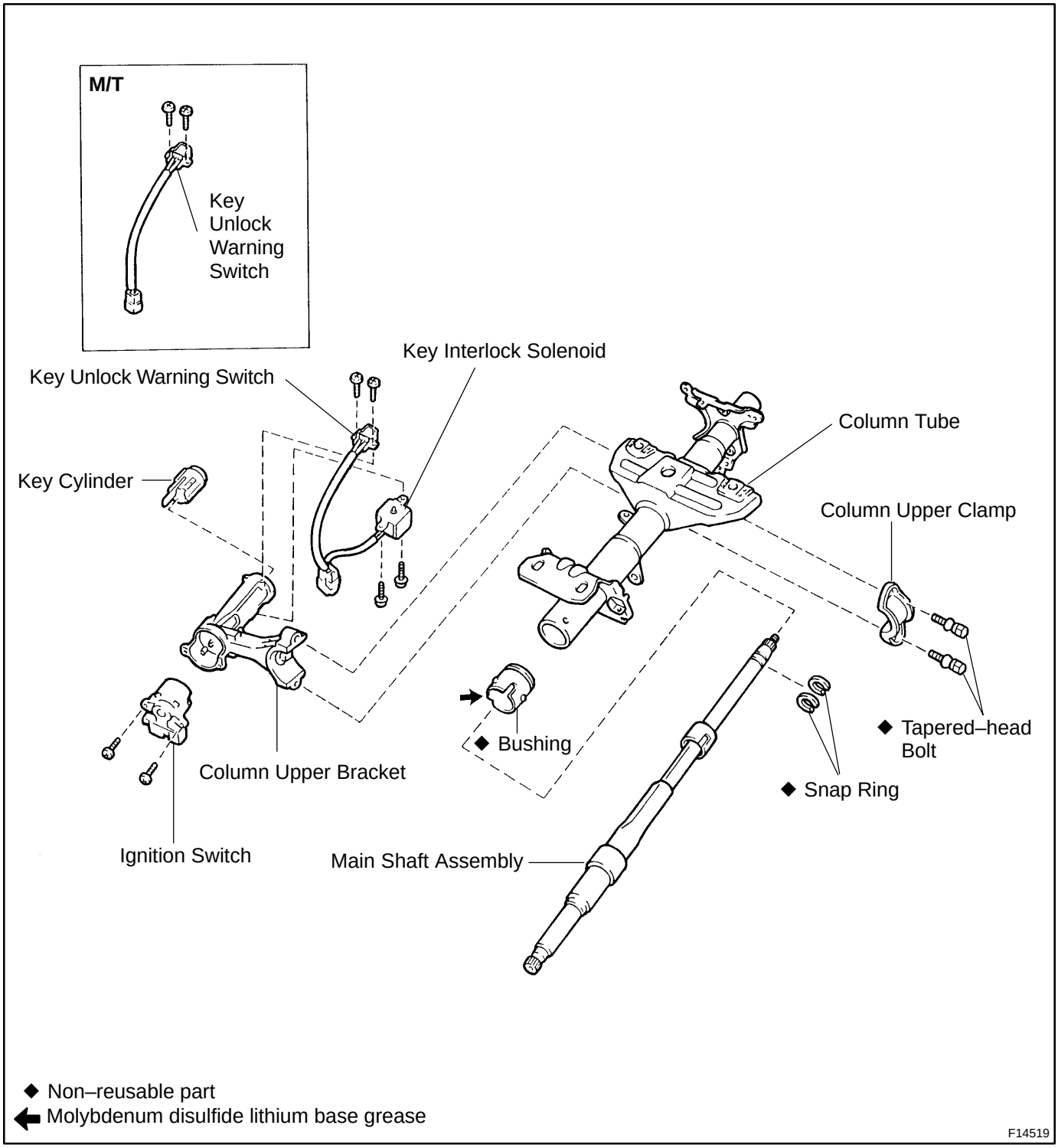
M/T
Key Unlock Warning Switch
Key Unlock Warning Switch
Key Interlock Solenoid
Key Cylinder
Column Tube
Column Upper Clamp
◆ Bushing
◆ Tapered–head Bolt
◆ Snap Ring
Column Upper Bracket
Ignition Switch
Main Shaft Assembly
◆ Non–reusable part
Molybdenum disulfide lithium base grease
F14519

SR04B–04

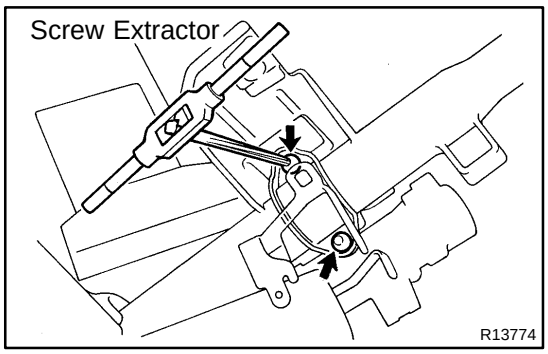

DISASSEMBLY

NOTICE:

When using a vise, do not overtighten it.

1. REMOVE COLUMN UPPER BRACKET AND COLUMN UPPER CLAMP

(a) Using a centering punch, mark the center of the 2 tapered–head bolts.

(b) Using a 3 – 4 mm (0.12 – 0.16 in.) drill, drill into the 2 bolts.

(c) Using a screw extractor, remove the 2 bolts.

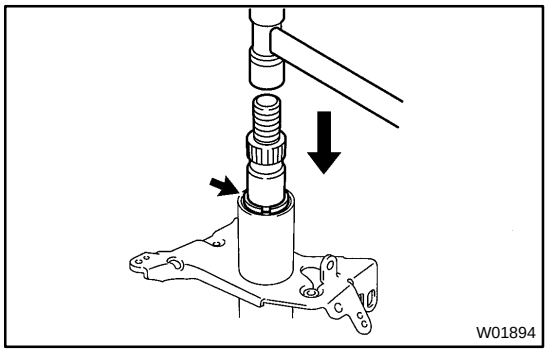

2. REMOVE MAIN SHAFT ASSEMBLY

(a) Using snap ring expander, remove the snap ring from the shaft assembly.

(b) Using a plastic hammer, tap out the shaft assembly from the column tube.

(c) Using snap ring expander, remove the snap ring from the shaft assembly.

SR04C–03

INSPECTION

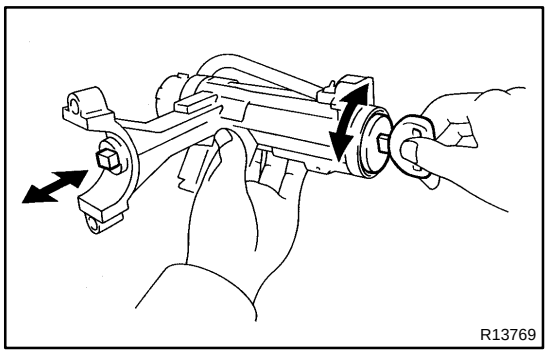

1. INSPECT STEERING LOCK OPERATION

Check that the steering lock mechanism operates properly.

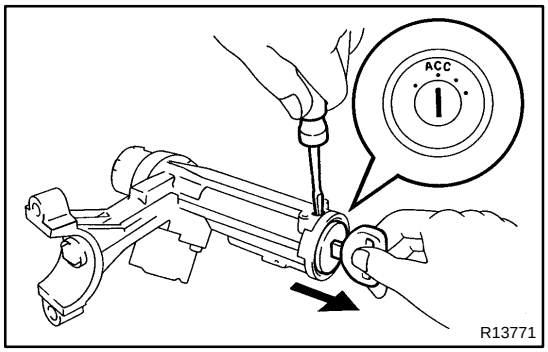

2. IF NECESSARY, REPLACE KEY CYLINDER

(a) Place the ignition key at the ACC position.

(b) Push down the stop pin with a screwdriver, and pull out the key cylinder.

(c) Install a new key cylinder.

HINT:

Make sure the ignition key is at the ACC position.

3. INSPECT IGNITION SWITCH (See page BE–14)

4. IF NECESSARY, REPLACE IGNITION SWITCH

(a) Remove the 2 screws and ignition switch.

(b) Install a new switch with the 2 screws.

5. INSPECT KEY UNLOCK WARNING SWITCH (See page BE–14)

6. M/T:

IF NECESSARY, REPLACE KEY UNLOCK WARNING SWITCH

(a) Remove the 2 screws and key unlock warning switch.

(b) Install a new switch with the 2 screws.

7. A/T:

INSPECT KEY INTERLOCK SOLENOID

A44D: (See page AT–30)

A340E, F: (See page AT–20)

8. A/T:

IF NECESSARY, REPLACE KEY UNLOCK WARNING SWITCH WITH KEY INTERLOCK SOLENOID

(a) Remove the 4 screws and key unlock warning switch with key interlock solenoid.

(b) Install a new switch and solenoid with the 4 screws.

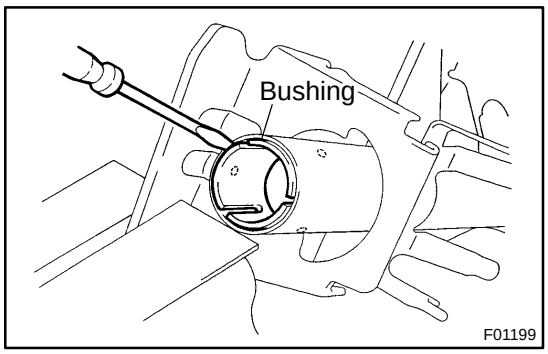

9. EXCEPT TILT STEERING COLUMN (NASTECH MADE):
IF NECESSARY, REPLACE BUSHING

(a) Using a screwdriver, loosen the 3 projections of the bushing, and remove the bushing from the column tube.

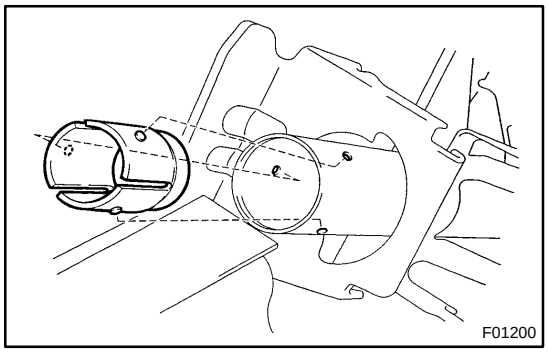

(b) Coat the inside of a new bushing with molybdenum disulfide lithium base grease.

(c) Align the projections on the bushing with the holes in the column tube, then install the bushing until the projections are firmly engaged in the holes.

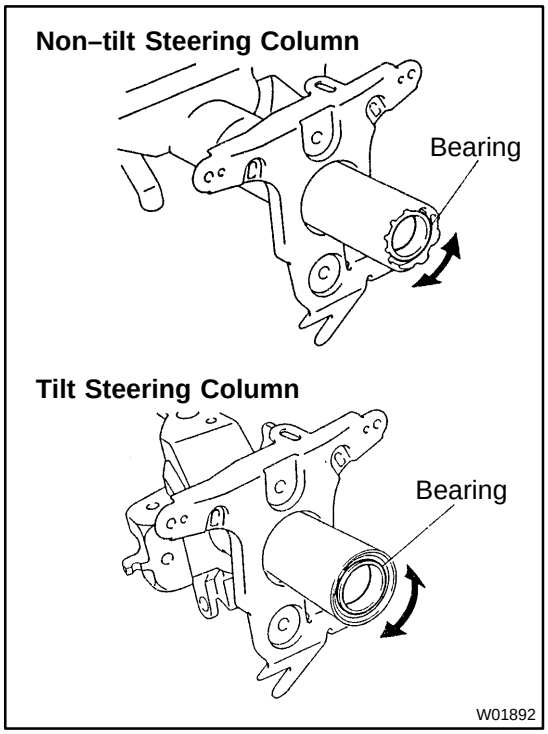

10. INSPECT BEARING

(a) Check the bearing rotation condition and check for abnormal noise.
If the bearing is worn or damaged, replace the column tube/column upper tube.

(b) Coat the bearing with molybdenum disulfide lithium base grease.

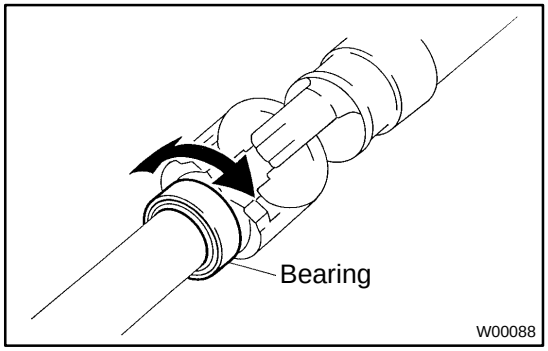

11. TILT STEERING COLUMN:
INSPECT BEARING

(a) Check the bearing rotation condition of the main shaft assembly and check for abnormal noise.

If necessary, replace bearing.

(b) Coat the bearing with molybdenum disulfide lithium base grease.

SR1EH–01

INSTALLATION

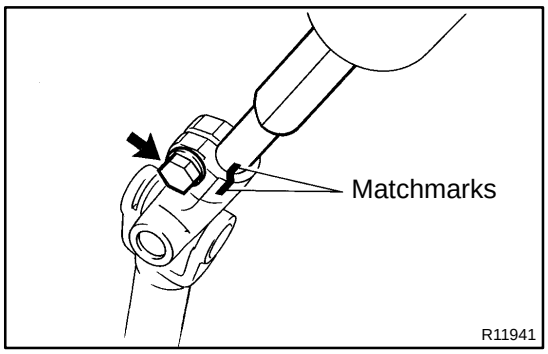

1. 2WD:

INSTALL UNIVERSAL JOINT NO.2 AND COLUMN HOLE COVER

(a) Install the column hole cover to the universal joint no.2.

NOTICE:

Be cover not to damage the hole cover dust seal

(b) Align the matchmarks on the sliding yoke and main shaft assembly.

(c) Install the bolt.

Torque: 35 N·m (360 kgf·cm, 26 ft·lbf)

(d) Install the column hole cover with the 5 bolts

Torque: 8.0 N·m (80 kgf·cm, 69 in.·lbf)

2. 4WD:

INSTALL COLUMN HOLE COVER NO.2

Install the column hole cover No.2 to the universal joint No.2.

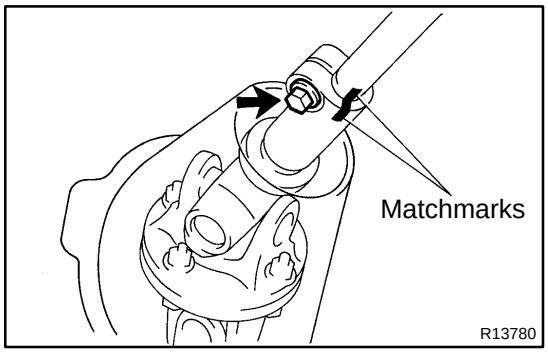

3. 4WD:

INSTALL UNIVERSAL JOINT NO.2

(a) Align the matchmarks on the universal joint No.2 and main shaft assembly.

(b) Install the bolt.

Torque: 35 N·m (360 kgf·cm, 26 ft·lbf)

4. INSTALL STEERING COLUMN ASSEMBLY

(a) Install the steering column assembly with the 2 bolts and nuts.

Torque: 26 N·m (260 kgf·cm, 19 ft·lbf)

(b) Connect the connectors.

5. 4WD:

INSTALL COLUMN HOLE COVER AND COLUMN HOLE COVER NO.2 SET BOLTS

Install the column hole cover with the 2 bolts and 3 column hole cover No.2 set bolts.

Torque: 8.0 N·m (80 kgf·cm, 69 in.·lbf)

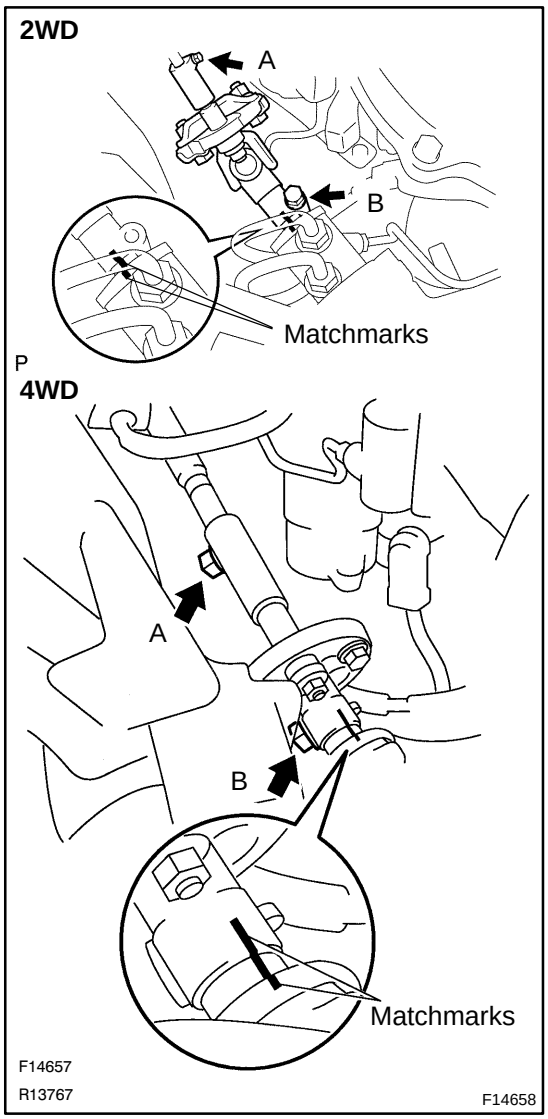

6. INSTALL INTERMEDIATE NO.2 SHAFT

(a) Align the matchmarks on the intermediate No.2 shaft and control valve shaft.

(b) Connect the intermediate No.2 shaft to the universal joint No.2 and temporarily tighten the bolt A.

(c) Install the bolt B.

Torque: 35 N·m (360 kgf·cm, 26 ft·lbf)

(d) Torque the bolt A.

Torque: 35 N·m (360 kgf·cm, 26 ft·lbf)

7. CONNECT JUNCTION BLOCK NO.1

Connect the junction block No.1 and install the 2 bolts.

8. INSTALL SPIRAL CABLE (See page BE–16)

9. INSTALL COMBINATION SWITCH WITH SPIRAL CABLE

(a) Tighten the 3 screws.

(b) Connect the airbag connector.

(c) Connect the 3 connectors.

10. INSTALL NO.2 HEATER TO REGISTER DUCT

Install the No.2 heater to resister duct with the screw.

11. INSTALL LOWER LH FINISH PANEL

(a) Install the lower LH finish panel with the 4 bolts and screw.

(b) Connect the hood lock release lever with the 2 screws.

12. INSTALL UPPER AND LOWER COLUMN COVERS

Install the upper and lower column covers with the 3 screws.

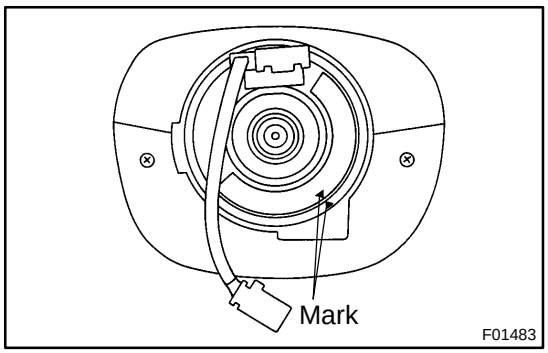

13. CENTER SPIRAL CABLE

(a) Check that the front wheels are facing straight ahead.

(b) Turn the cable counterclockwise by hand until it becomes harder to turn the cable.

(c) Then rotate the cable clockwise about 2.5 turns to align the mark.

HINT:

The cable will rotate about 2.5 turns to either left or right of the center.

14. INSTALL STEERING WHEEL

(a) Align the matchmarks on the steering wheel and main shaft assembly.

(b) Install the wheel set nut.

Torque: 50 N·m (500 kgf·cm, 35 ft·lbf)

(c) Connect the connector.

15. INSTALL STEERING WHEEL PAD

NOTICE:

- **Make sure the wheel pad is installed to the specified torque.**
- **If the wheel pad has been dropped, or there are cracks, dents or other defects in the case or connector, replace the wheel pad with a new one.**
- **When installing the wheel pad, take care that the wirings do not interfere with other parts and are not pinched between other parts.**

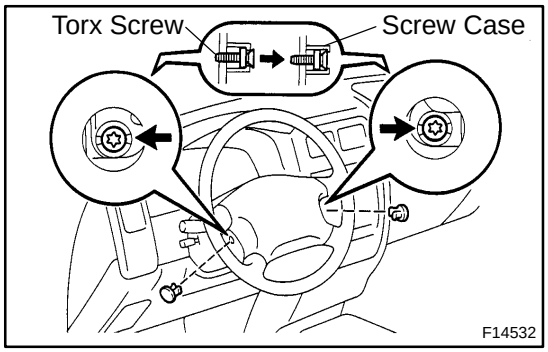

(a) Connect the airbag connector.

(b) Install the wheel pad after confirming that the circumference groove of the torx screw is caught on the screw case.

NOTICE:

COLUMN SHIFT:

Take care that the spiral cable does not touch the dinamic damper of the steering wheel.

(c) Using a torx socket wrench, torque the 2 screws.
Torque: 9.0 N·m (90 kgf·cm, 78 in.·lbf)

(d) Install the 2 steering wheel lower No.2 covers.

16. CHECK STEERING WHEEL CENTER POINT

SR04D–04

REASSEMBLY

NOTICE:

When using a vise, do not overtighten it.

1. COAT PARTS INDICATED BY ARROWS WITH MOLYBDENUM DISULFIDE LITHIUM BASE GREASE (See page SR–12)

2. INSTALL MAIN SHAFT ASSEMBLY

(a) Using snap ring expander, install a new snap ring to the shaft assembly.

(b) Install the shaft assembly to the column tube.

(c) Using snap ring expander, install a new snap ring to the shaft assembly.

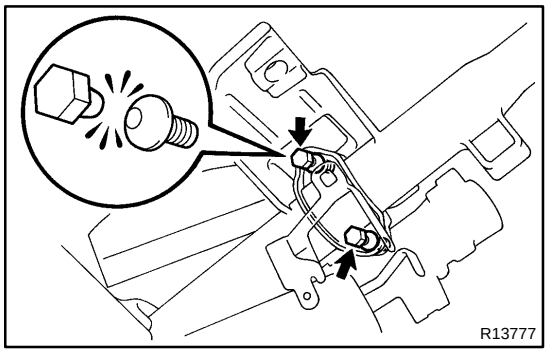

3. INSTALL COLUMN UPPER BRACKET AND COLUMN UPPER CLAMP

(a) Install the column upper bracket and column upper clamp with 2 new tapered–head bolts to the column tube.

(b) Tighten the 2 tapered–head bolts until the bolt heads break off.

SR1EG–02

REMOVAL

1. REMOVE STEERING WHEEL PAD

NOTICE:

- **If the airbag connector is disconnected with the ignition switch at ON or ACC, DTCs will be recorded.**
- **Never use airbag parts from another vehicle. When replacing parts, replace with new ones.**

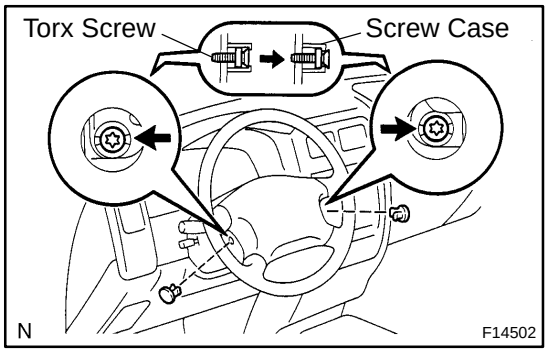

(a) Place the front wheels facing straight ahead.

(b) Remove the 2 steering wheel lower No.2 covers.

(c) Using a torx socket wrench, loosen the 2 torx screws.

HINT:

Loosen the screw until the groove along the screw circumference catches on the screw case.

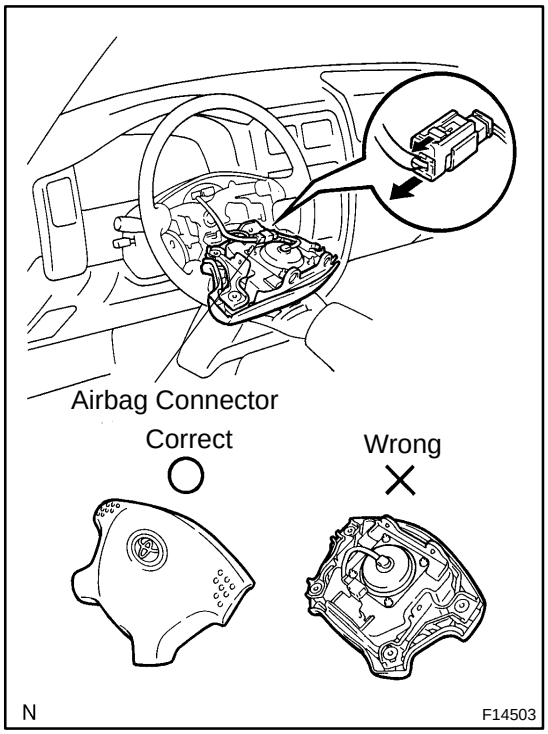

(d) Pull out the wheel pad from the steering wheel and disconnect the airbag connector.

CAUTION:

- **When storing the wheel pad, keep the upper surface of the pad facing upward.**
- **Never disassemble the wheel pad.**

NOTICE:

When removing the wheel pad, take care not to pull the airbag wire harness.

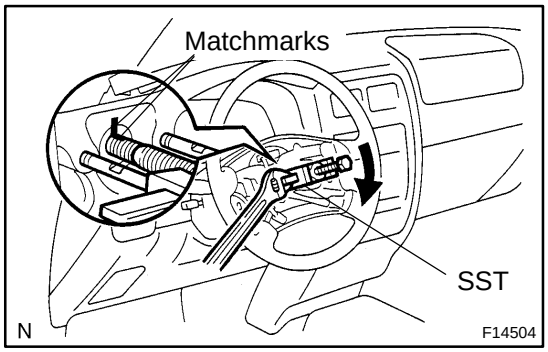

2. REMOVE STEERING WHEEL

(a) Disconnect the connector.

(b) Remove the steering wheel set nut.

(c) Place matchmarks on the steering wheel and main shaft assembly.

(d) Using SST, remove the wheel.

SST 09950–50013 (09951–05010, 09952–05010, 09953–05010, 09954–05021)

3. REMOVE UPPER AND LOWER COLUMN COVERS

Remove the 3 screws, upper and lower column covers.

4. REMOVE LOWER LH FINISH PANEL

(a) Remove the 2 screws and disconnect the hood lock release lever from the panel.

(b) Remove the 4 panel set bolts, screw and lower LH finish panel.

5. REMOVE NO. 2 HEATER TO REGISTER DUCT

Remove the screw and No.2 heater to register duct.

6. REMOVE COMBINATION SWITCH WITH SPIRAL CABLE

(a) Disconnect the 3 connectors.

(b) Disconnect the airbag connector.

(c) Remove the 3 screws and combination switch with the spiral cable.

7. REMOVE SPIRAL CABLE (See page BE–16)

NOTICE:

Do not disassemble the cable or apply oil to it.

8. DISCONNECT JUNCTION BLOCK NO.1

Remove the 2 bolts and disconnect the junction block No.1.

9. DISCONNECT INTERMEDIATE NO.2 SHAFT

(a) Place matchmarks on the intermediate No.2 shaft and control valve shaft.

(b) Loosen the bolt A and remove the bolt B.

(c) disconnect the intermediate No.2 shaft from the control valve shaft.

10. REMOVE INTERMEDIATE NO.2 SHAFT

Remove the bolt A and intermediate No.2 shaft.

11. 4WD:

REMOVE COLUMN HOLE COVER AND COLUMN HOLE COVER NO.2 SET BOLTS

Remove the 5 bolts and column hole cover.

12. REMOVE STEERING COLUMN ASSEMBLY

(a) Disconnect the connectors.

(b) Remove the 2 column assembly set bolts and nuts.

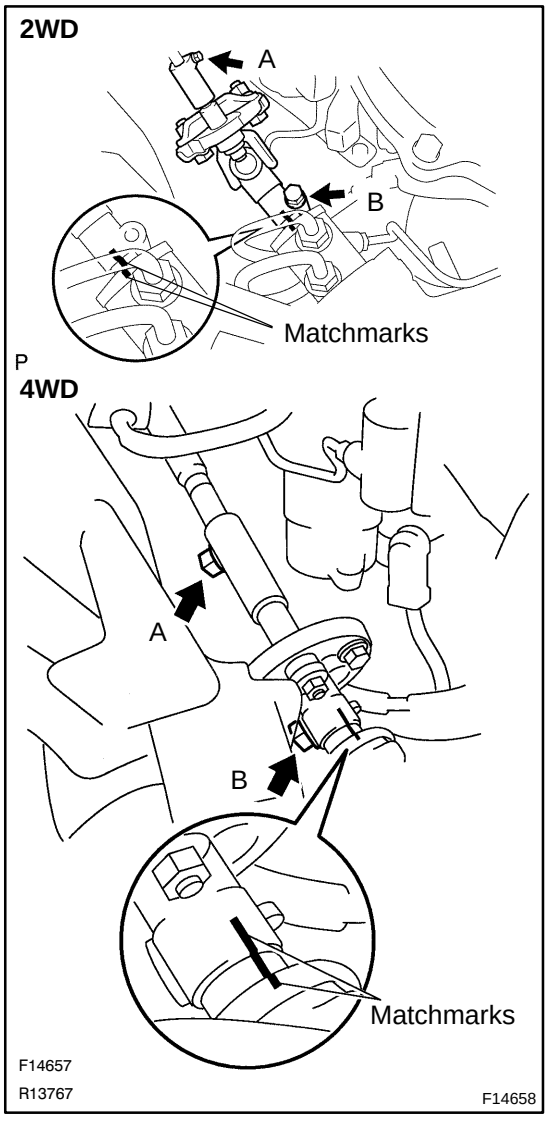

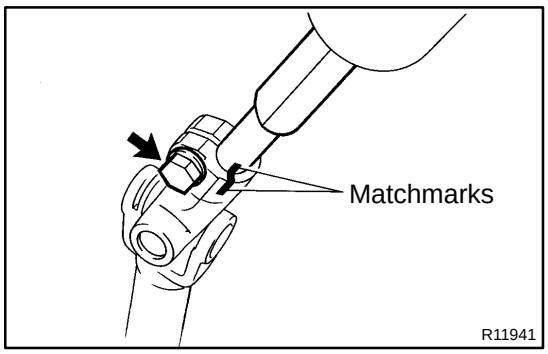

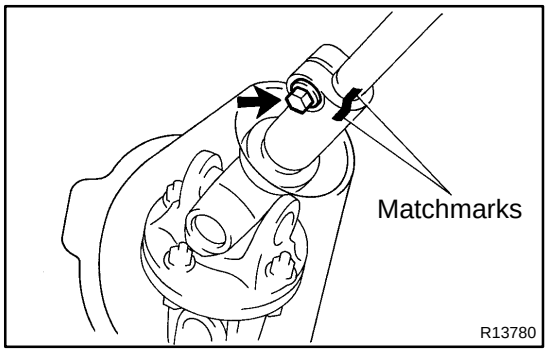

13. 2WD:

REMOVE UNIVERSAL JOINT NO.2 AND COLUMN HOLE COVER

(a) Remove the 5 column hole cover installation bolts.

(b) Place matchmarks on the universal joint No.2 and main shaft assembly.

(c) Remove the bolt ,universal joint No.2 and column hole cover.

NOTICE:

Be careful not to damage the hole cover dust seal.

14. 4WD:

REMOVE UNIVERSAL JOINT NO.2

(a) Place matchmarks on the universal joint No.2 and main shaft assembly.

(b) Remove the bolt and universal joint No.2 .

15. 4WD:

REMOVE COLUMN HOLE COVER NO.2

Remove the column hole cover No.2 from the universal joint No.2.

POWER STEERING FLUID BLEEDING

SR045–02

1. **CHECK FLUID LEVEL (See page SR–5)**
2. **JACK UP FRONT OF VEHICLE AND SUPPORT IT WITH STANDS**
3. **TURN STEERING WHEEL**

With the engine stopped, turn the wheel slowly from lock to lock several times.

4. **LOWER VEHICLE**
5. **START ENGINE**

Run the engine at idle for a few minutes.

6. **TURN STEERING WHEEL**

(a) With the engine idling, turn the wheel to left or right full lock and keep it there for 2–3 seconds, then turn the wheel to the opposite full lock and keep it there for 2–3 seconds.

(b) Repeat step (a) several times.

7. **STOP ENGINE**

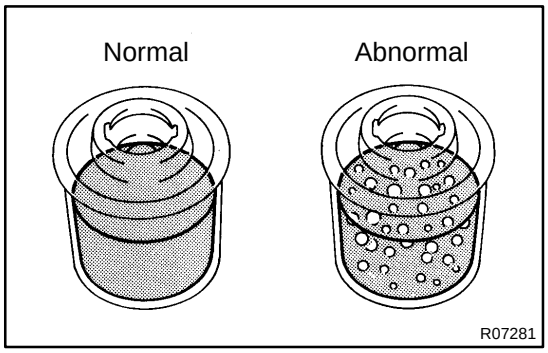

8. **CHECK FOR FOAMING OR EMULSIFICATION**

If the system has to be bled twice specifically because of foaming or emulsification, check for fluid leaks in the system.

9. **CHECK FLUID LEVEL (See page SR–5)**

SR046–02

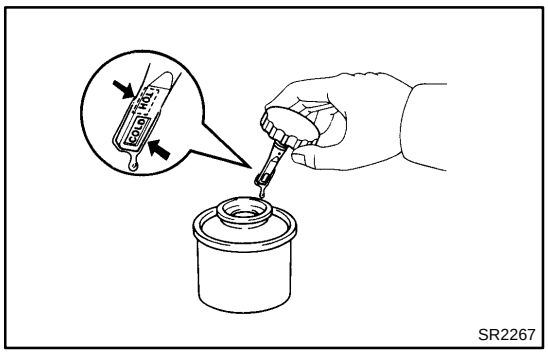

SR2267

INSPECTION

1. CHECK FLUID LEVEL

(a) Keep the vehicle level.

(b) With the engine stopped, check the fluid level in the oil reservoir.

If necessary, add fluid.

Fluid: ATF DEXRON® II or III

HINT:

Check that the fluid level is within the HOT LEVEL range on the reservoir cap dipstick. If the fluid is cold, check that it is within the COLD LEVEL range.

(c) Start the engine and run it at idle.

(d) Turn the steering wheel from lock to lock several times to boost fluid temperature.

Fluid temperature: 80˚C (176˚F)

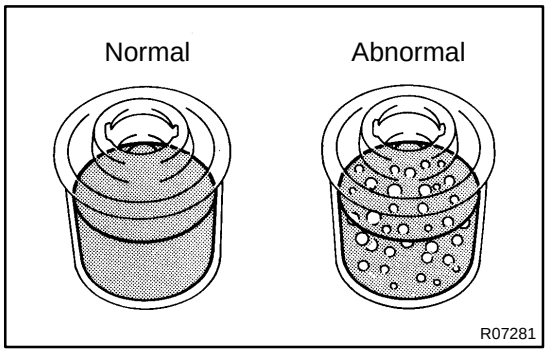

R07281

(e) Check for foaming or emulsification.

If there is foaming or emulsification, bleed power steering system (See page SR–4).

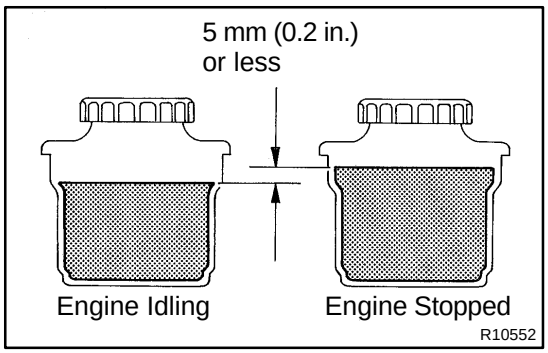

R10552

(f) With the engine idling, measure the fluid level in the oil reservoir.

(g) Stop the engine.

(h) Wait a few minutes and remeasure the fluid level in the oil reservoir.

Maximum fluid level rise: 5 mm (0.20 in.)

If a problem is found, bleed power steering system (See page SR–4).

(i) Check the fluid level.

2. CHECK STEERING FLUID PRESSURE

(a) 5VZ–FE Engine:
Loosen the 3 bolts and air cleaner assembly (See page SR–43).

(b) Disconnect the pressure feed tube from the PS vane pump
(2RZ–FE, 3RZ–FE Engines: See page SR–34)
(5VZ–FE Engine: See page SR–45).

(c) Connect SST, as shown below.
SST 09640–10010 (09641–01010, 09641–01030, 09641–01060)

NOTICE:
Check that the valve of the SST is in the open position.

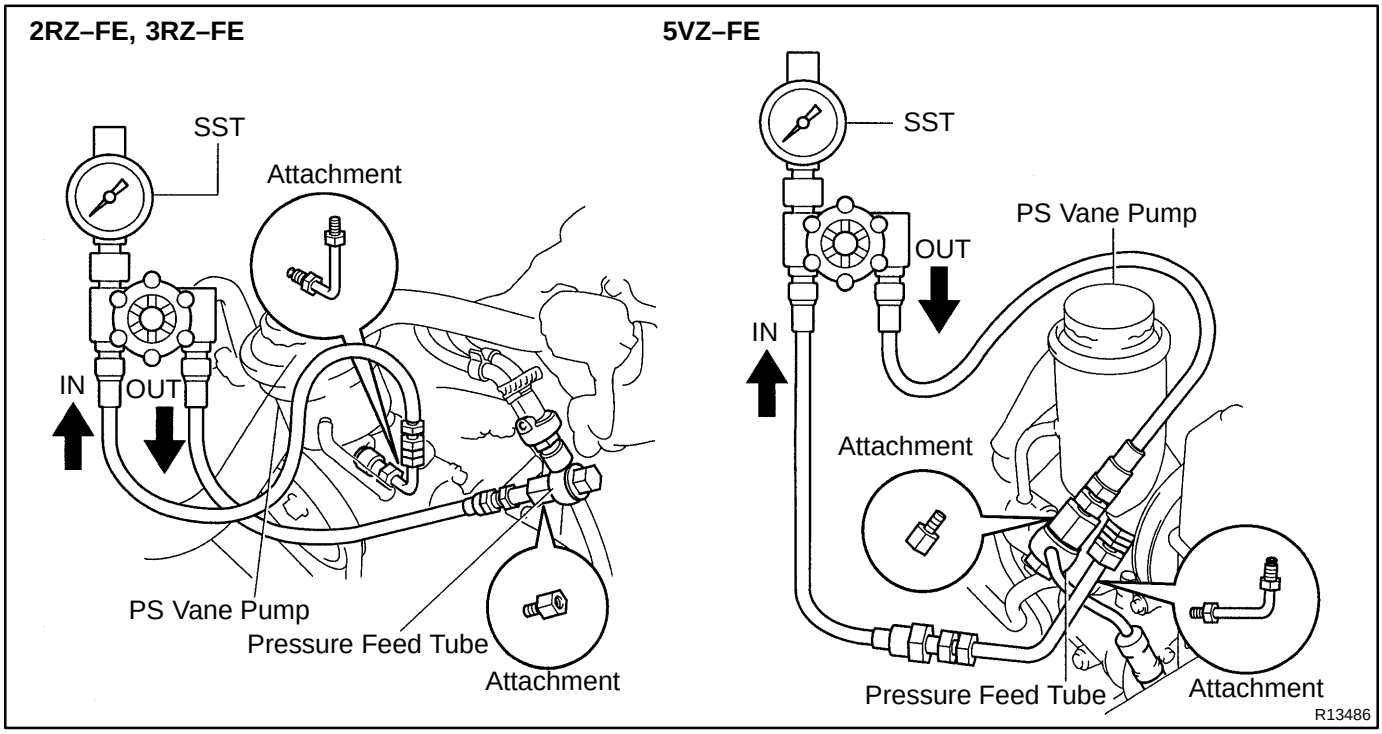

(d) Bleed the power steering system (See page SR–4).

(e) Start the engine and run it at idle.

(f) Turn the steering wheel from lock to lock several times to boost fluid temperature.
Fluid temperature: 80 ˚C (176 ˚F)

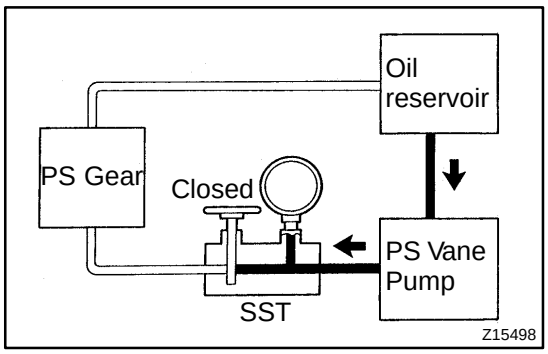

(g) With the engine idling, close the valve of the SST and observe the reading on the SST.
Minimum fluid pressure:
8,336 kPa (85 kgf/cm^2, 1,209 psi)

NOTICE:
- **Do not keep the valve closed for more than 10 seconds.**
- **Do not let the fluid temperature become too high.**

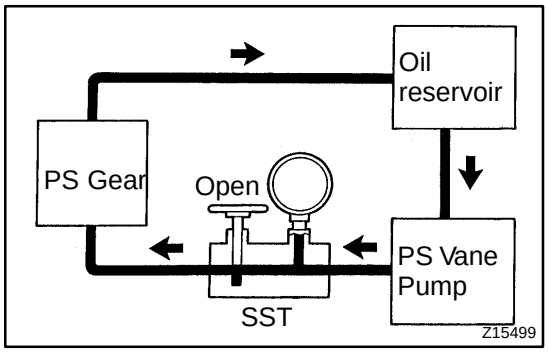

(h) With the engine idling, open the valve fully.
(i) Measure the fluid pressure at engine speeds of 1,000 rpm and 3,000 rpm.
Difference fluid pressure:
490 kPa (5 kgf/cm^2, 71 psi) or less

NOTICE:
Do not turn the steering wheel.

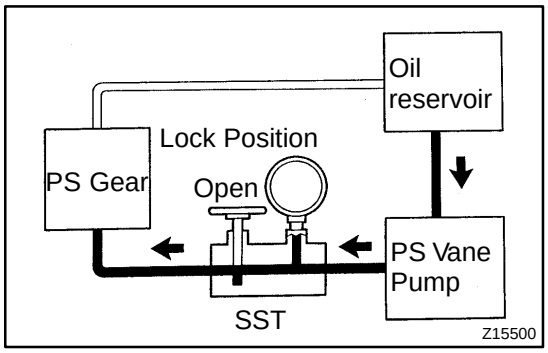

(j) With the engine idling and valve fully opened, turn the steering wheel to full lock.
Minimum fluid pressure:
8,336 kPa (85 kgf/cm^2, 1,209 psi)

NOTICE:
- **Do not maintain lock position for more than 10 seconds.**
- **Do not let the fluid temperature become too high.**

(k) Disconnect the SST.
(l) Connect the pressure feed tube
(2RZ–FE, 3RZ–FE Engines: See page SR–42)
(5VZ–FE Engine: See page SR–53).
(m) 5VZ–FE Engine:
Install the air cleaner and 3 bolts (See page SR–43).
(n) Bleed the power steering system (See page SR–4).

POWER STEERING GEAR (2WD)

SR059–03

COMPONENTS

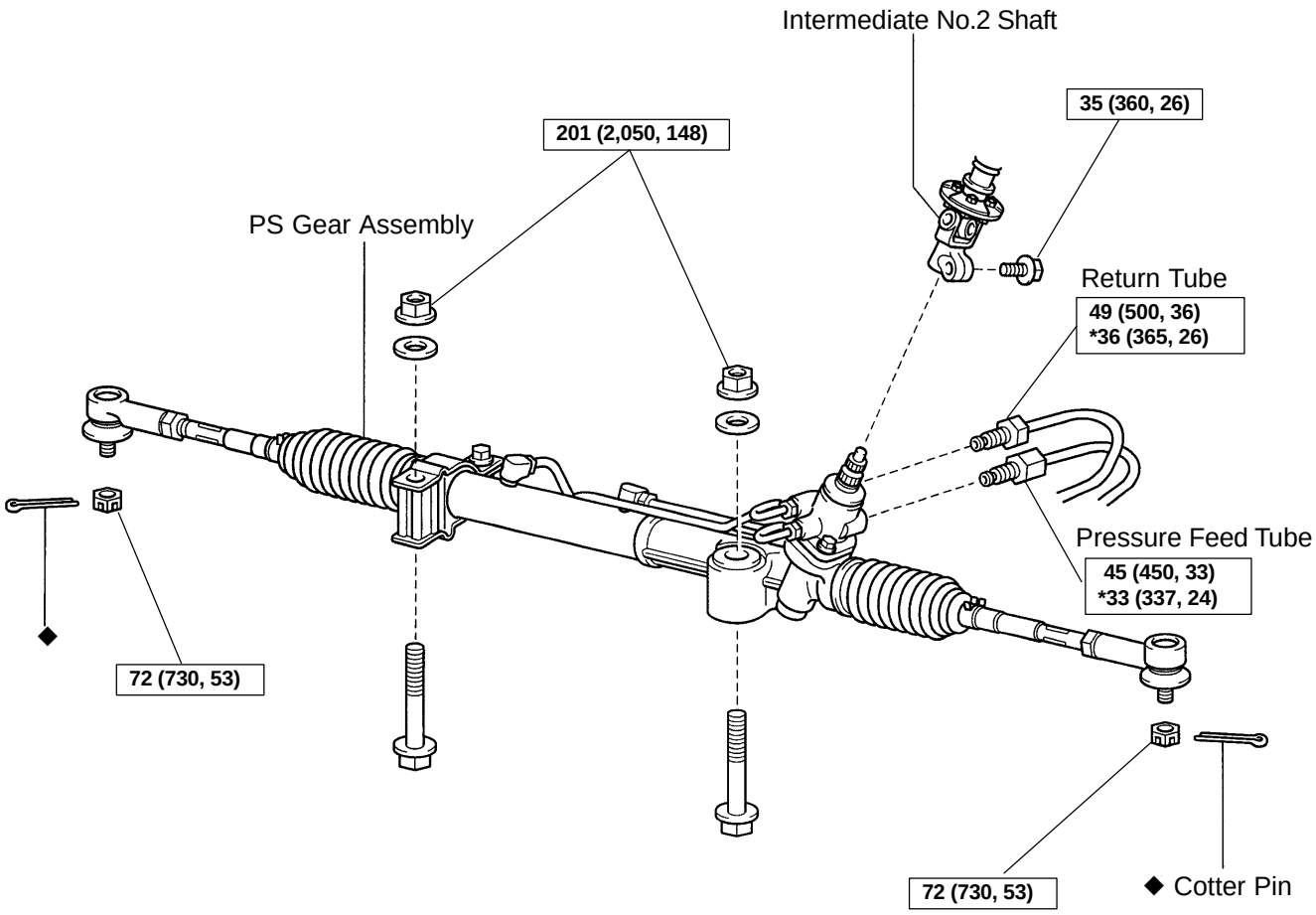

N·m (kgf·cm, ft·lbf) : Specified torque

◆ Non–reausable part

* For use with SST

R13738

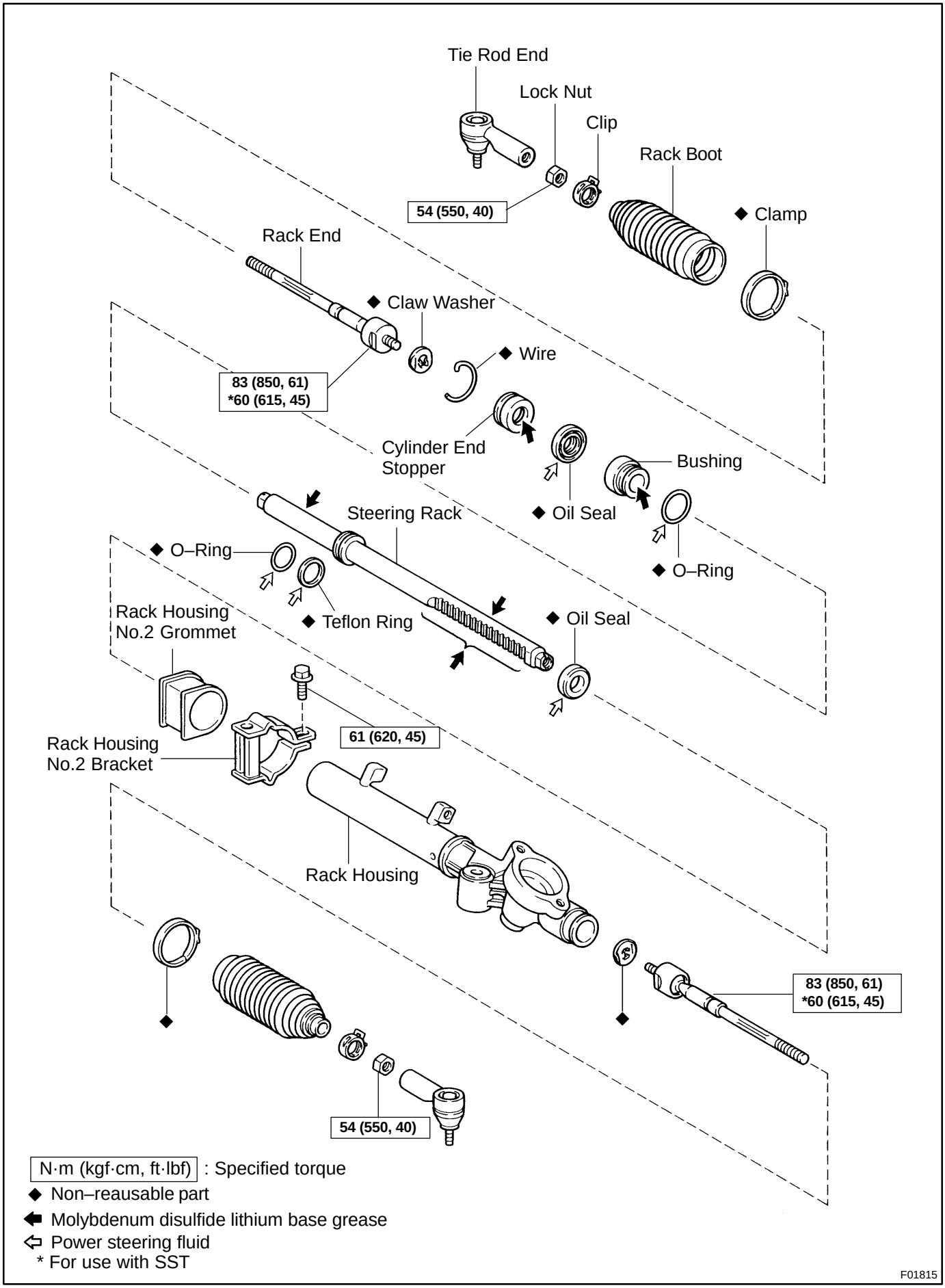
Tie Rod End
Lock Nut
Clip
Rack Boot
54 (550, 40)
◆ Clamp
Rack End
◆ Claw Washer
◆ Wire
83 (850, 61)
*60 (615, 45)
Cylinder End
Stopper
Bushing
◆ Oil Seal
Steering Rack
◆ O–Ring
◆ O–Ring
Rack Housing
No.2 Grommet
◆ Teflon Ring
◆ Oil Seal
61 (620, 45)
Rack Housing
No.2 Bracket
Rack Housing
83 (850, 61)
*60 (615, 45)
54 (550, 40)
N·m (kgf·cm, ft·lbf) : Specified torque
◆ Non–reausable part
Molybdenum disulfide lithium base grease
Power steering fluid
* For use with SST
F01815

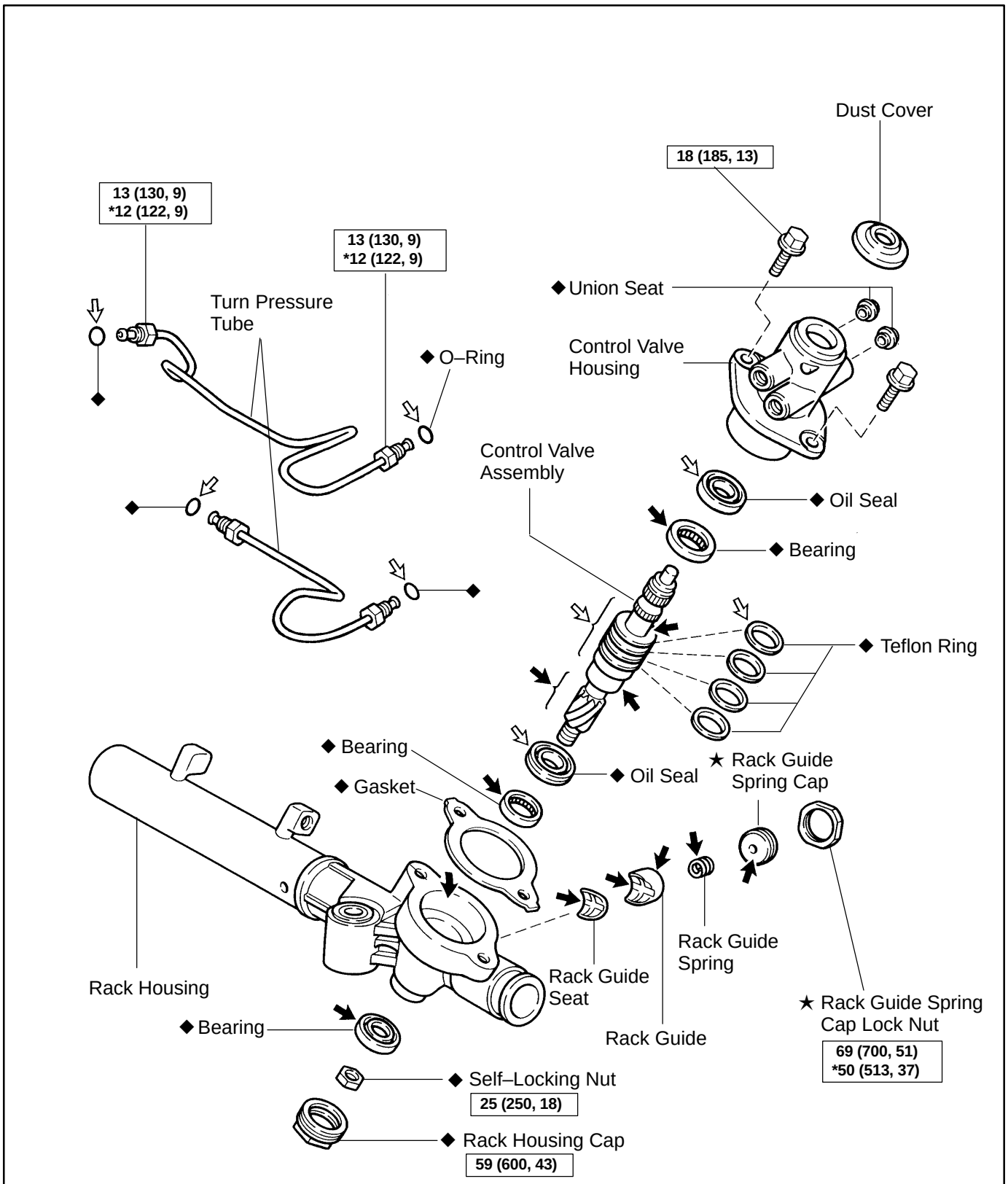

N·m (kgf·cm, ft·lbf) : Specified torque
◆ Non–reausable part
★ Precoated part
⬅ Molybdenum disulfide lithium base grease
⇦ Power steering fluid
* For use with SST

F01816

SR05B–02

DISASSEMBLY

NOTICE:

When using a vise, do not overtighten it.

1. REMOVE 2 TURN PRESSURE TUBES

(a) Using SST, remove the 2 turn pressure tubes.
SST 09023–38200

(b) Remove the 4 O–rings from the tubes.

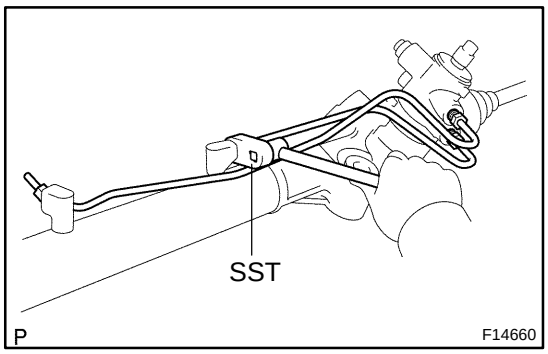

2. SECURE PS GEAR ASSEMBLY IN VISE

Using SST, secure the gear assembly in a vise.
SST 09612–00012

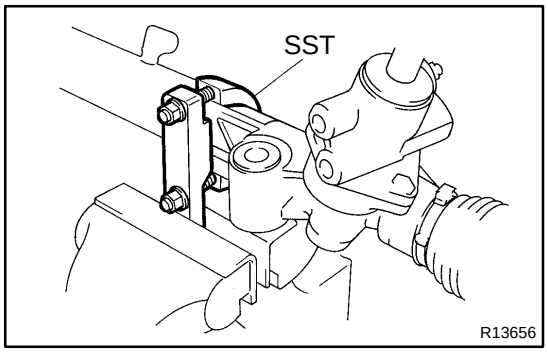

3. REMOVE RH AND LH TIE ROD ENDS AND LOCK NUTS

(a) Place matchmarks on the tie rod end and rack end.

(b) Loosen the lock nut, and remove the tie rod end and lock nut.

(c) Employ the same manner described above to the other side.

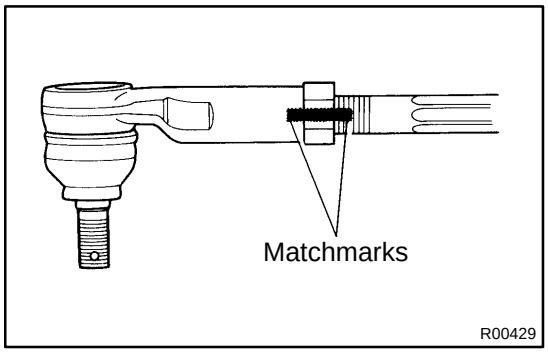

4. REMOVE RH AND LH CLIPS, RACK BOOTS AND CLAMPS

(a) Using a screwdriver, loosen the clamp.

NOTICE:

Be careful not to damage the rack boot.

(b) Remove the clip and rack boot.

(c) Employ the same manner described above to the other side.

HINT:

Mark the RH and LH rock boots.

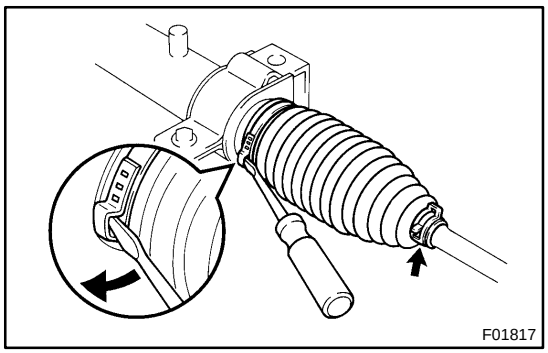

5. REMOVE RH AND LH RACK ENDS AND CLAW WASHERS

(a) Using a screwdriver and hammer, unstake the washer.

NOTICE:

Avoid any impact to the steering rack.

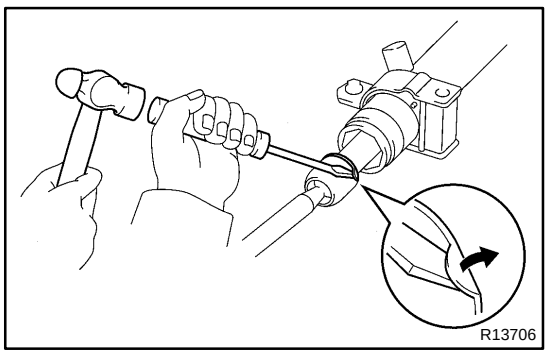

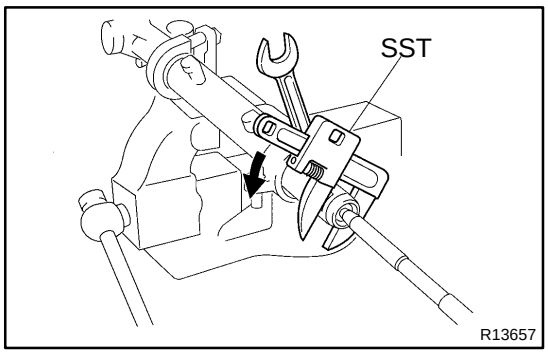

(b) Using a spanner to hold the steering rack steady, and using SST, remove the rack end.
SST 09922–10010

NOTICE:

Use SST 09922–10010 in the direction shown in the illustration.

(c) Remove the claw washer.

(d) Employ the same manner described above to the other side.

HINT:

Mark the RH and LH rack ends.

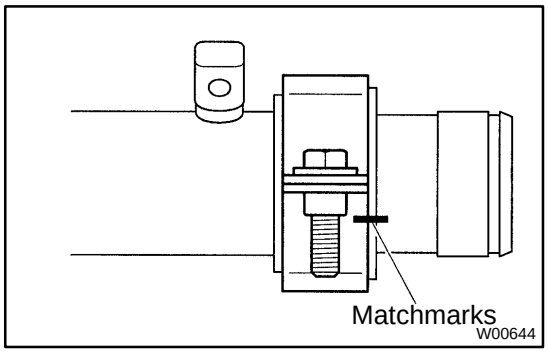

6. REMOVE RACK HOUSING NO.2 BRACKET AND GROMMET

(a) Place matchmarks on the bracket and rack housing.

(b) Remove the bolt, rack housing No.2 bracket and grommet.

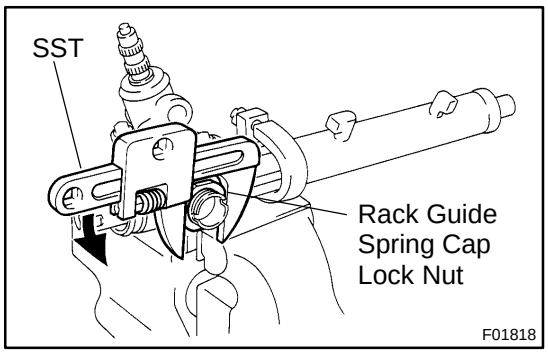

7. REMOVE RACK GUIDE SPRING CAP LOCK NUT

Using SST, remove the rack guide spring cap lock nut.
SST 09922–10010

NOTICE:

Use SST 09922–10010 in the direction shown in the illustration.

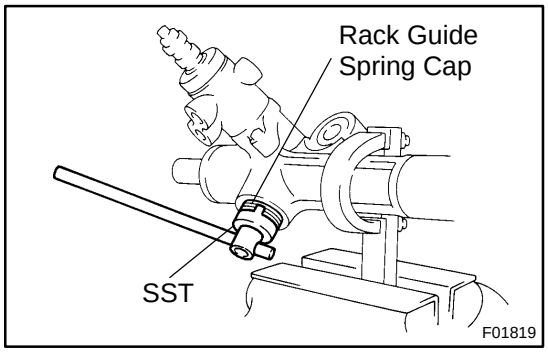

8. REMOVE RACK GUIDE SPRING CAP, RACK GUIDE SPRING, RACK GUIDE AND RACK GUIDE SEAT

(a) Using SST, remove the rack guide spring cap, rack guide spring and rack guide.
SST 09631–10021

(b) Remove the rack guide seat from the guide.

9. REMOVE RACK HOUSING CAP

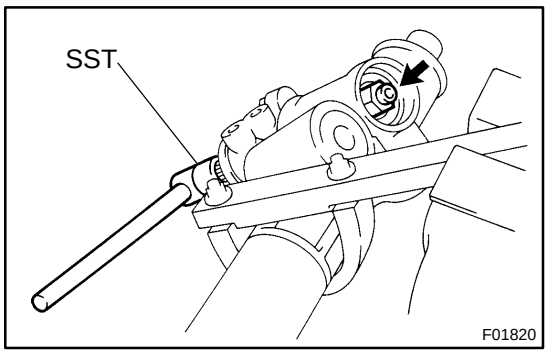

10. REMOVE SELF–LOCKING NUT

Using SST to stop the control valve shaft rotating, remove the self locking nut.

SST 09616–00011

11. REMOVE DUST COVER

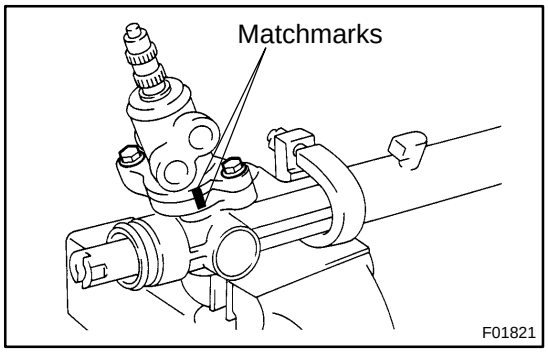

12. REMOVE CONTROL VALVE HOUSING WITH CONTROL VALVE ASSEMBLY

(a) Place matchmarks on the control valve housing and rack housing.
(b) Remove the 2 bolts.
(c) Pull out the control valve housing with the control valve assembly.
(d) Remove the gasket from the rack housing.

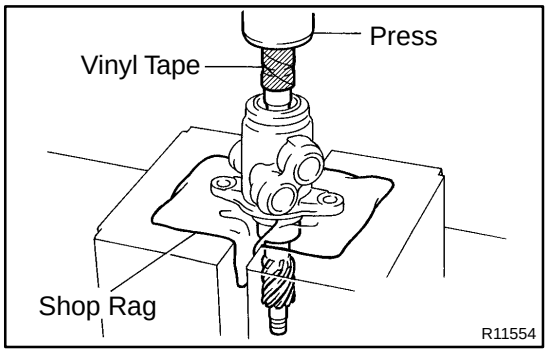

13. REMOVE CONTROL VALVE ASSEMBLY

(a) To prevent oil seal lip damage, wind vinyl tape on the serrated part of the valve shaft.
(b) Press out the control valve assembly with the oil seal.

NOTICE:

- **Place a shop rag between the valve housing and the blocks.**
- **Be careful not to drop the valve assembly.**
- **Be careful not to damage the oil seal lip.**

14. REMOVE OIL SEAL

Remove the oil seal from the control valve assembly.

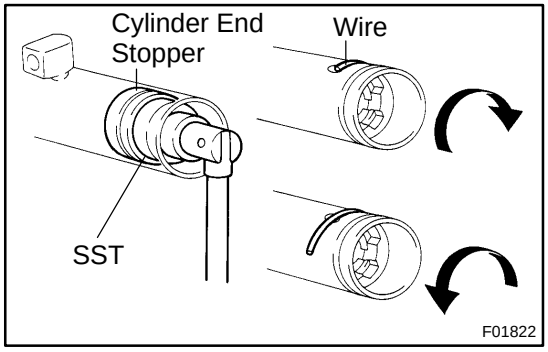

15. REMOVE CYLINDER END STOPPER

(a) Using SST, turn the cylinder end stopper clockwise until the wire end is visible through the service hole.
SST 09631–10021
(b) Using SST, turn the cylinder end stopper counterclockwise, and remove the wire and cylinder end stopper.
SST 09631–10021

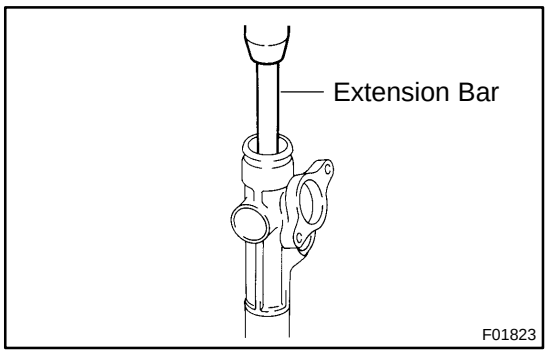

16. REMOVE STEERING RACK AND BUSHING

(a) Using an extension bar and socket wrench (19 mm), press out the rack with the bushing.

NOTICE:

Take care not to drop the rack.

(b) Remove the bushing from the rack.

(c) Remove the O–ring from the bushing.

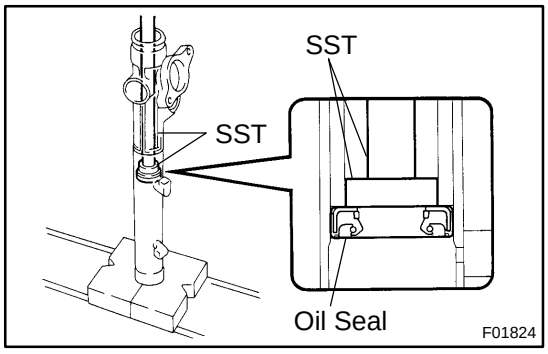

17. REMOVE OIL SEAL

Using SST, press out the oil seal.

SST 09950–60010 (09951–00280),
09950–70010 (09951–07360)

SR05C–02

INSPECTION

NOTICE:

When using a vise, do not overtighten it.

1. INSPECT STEERING RACK

(a) Using a dial indicator, check the rack for runout and for teeth wear and damage.

Maximum runout: 0.3 mm (0.0118 in.)

(b) Check the back surface for wear and damage.

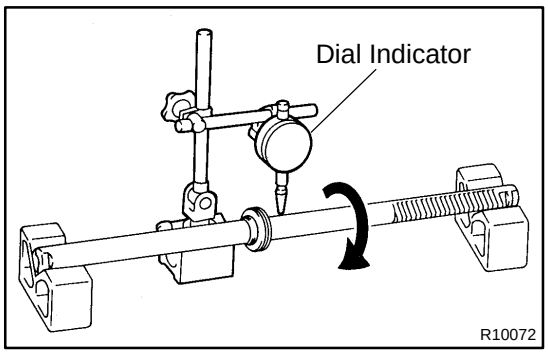

2. IF NECESSARY, REPLACE OIL SEAL AND BEARING

(a) Using SST, press out the oil seal and bearing from the control valve housing.

SST 09950–60010 (09951–00260), 09950–70010 (09951–07150)

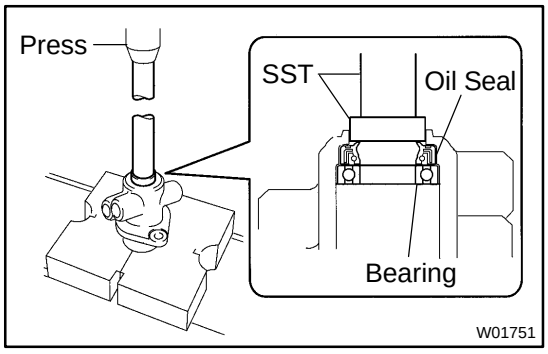

(b) Coat a new oil seal lip with power steering fluid.

(c) Using SST, press in the oil seal.

SST 09950–60010 (09951–00180, 09951–00330, 09952–06010), 09950–70010 (09951–07150)

NOTICE:

Make sure to install the oil seal facing the correct direction.

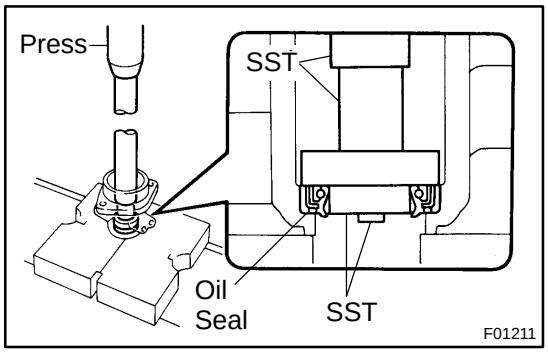

(d) Coat a new bearing with molybdenum disulfide lithium base grease.

(e) Using SST, press in the bearing.

SST 09950–60010 (09951–00330), 09950–70010 (09951–07150)

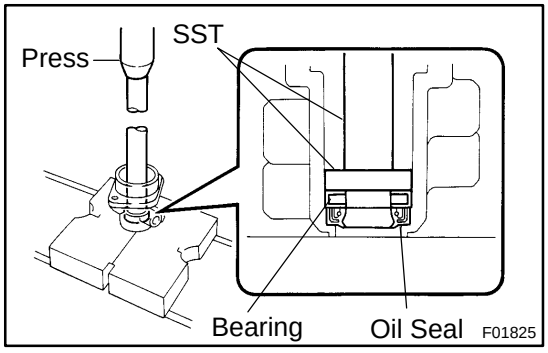

3. IF NECESSARY, REPLACE 2 BEARINGS

(a) Using a brass bar and hammer, tap out the bearing from the rack housing.

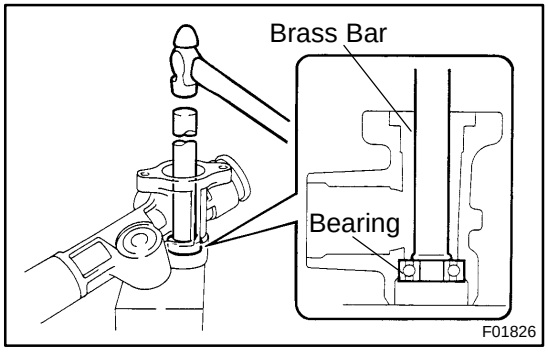

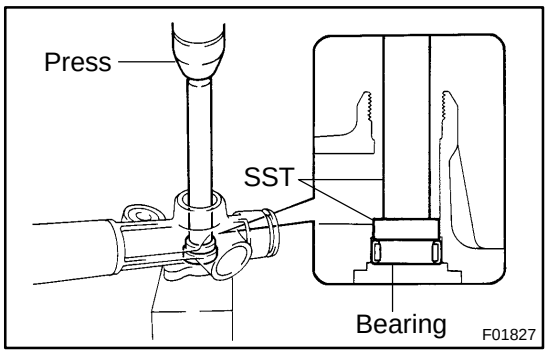

(b) Using SST, press out the bearing from the rack housing.
SST 09950–60010 (09951–00260),
09950–70010 (09951–07200)

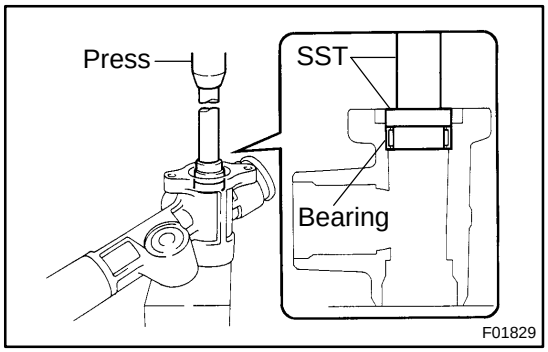

(c) Coat a new bearing with molybdenum disulfide lithium base grease.
(d) Using SST, press in the bearing.
SST 09950–60010 (09951–00310),
09950–70010 (09951–07200)

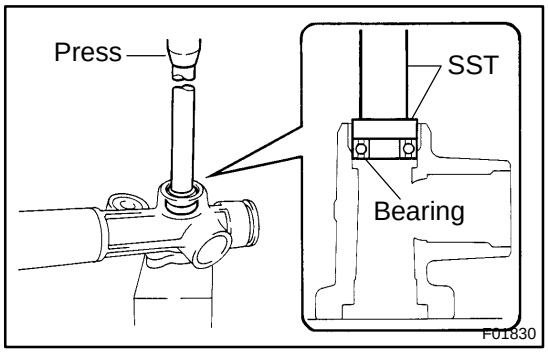

(e) Coat a new bearing with molybdenum disulfide lithium base grease.
(f) Using SST, press in the bearing.
SST 09950–60010 (09951–00320),
09950–70010 (09951–07200)

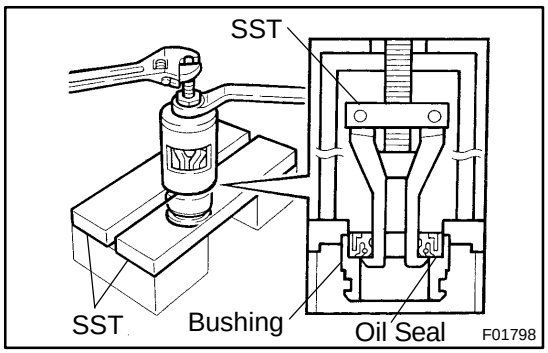

4. IF NECESSARY, REPLACE OIL SEAL

(a) Using SST, remove the oil seal from the bushing.
SST 09527–20011, 09612–24014 (09613–22011)

NOTICE:
Be careful not to damage the bushing.

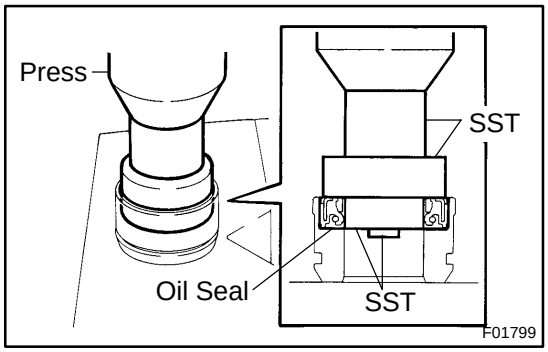

(b) Coat a new oil seal lip with power steering fluid.
(c) Using SST, press in the oil seal.
SST 09950–60010 (09951–00240, 09951–00400, 09952–06010)

NOTICE:
Make sure to install the oil seal facing the correct direction.

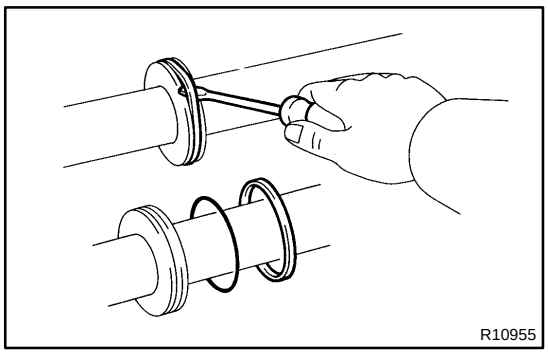

5. IF NECESSARY, REPLACE TEFLON RING AND O–RING

(a) Using a screwdriver, remove the teflon ring and O–ring from the steering rack.

NOTICE:

Be careful not to damage the groove for the teflon ring.

(b) Coat a new O–ring with power steering fluid and install it.

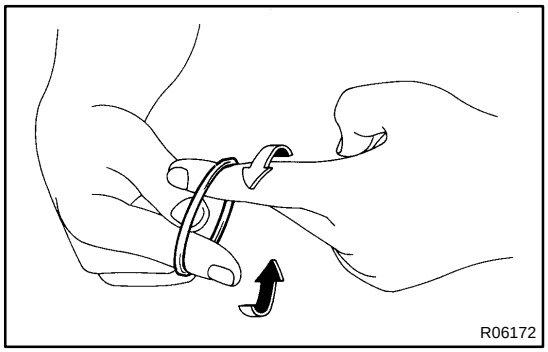

(c) Expand a new teflon ring with your fingers.

NOTICE:

Be careful not to over–expand the ring.

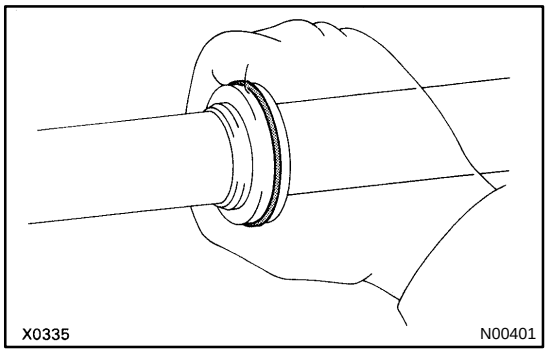

(d) Coat the teflon ring with power steering fluid.

(e) Install the teflon ring to the steering rack, and settle it down with your fingers.

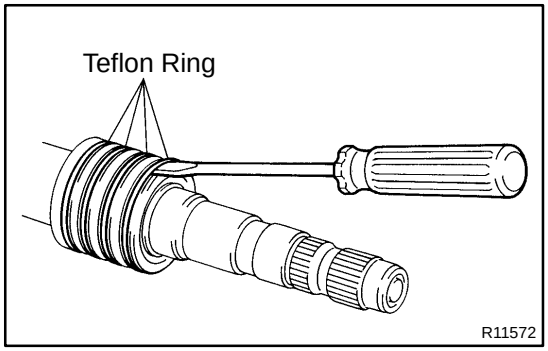

6. IF NECESSARY, REPLACE TEFLON RINGS

(a) Using a screwdriver, remove the 4 teflon rings from the control valve assembly.

NOTICE:

Be careful not to damage the grooves for the teflon ring.

(b) Expand 4 new teflon rings with your fingers.

NOTICE:

Be careful not to over–expand the teflon ring.

(c) Coat the teflon rings with power steering fluid.

(d) Install the teflon rings to the control valve assembly, and settle them down with your fingers.

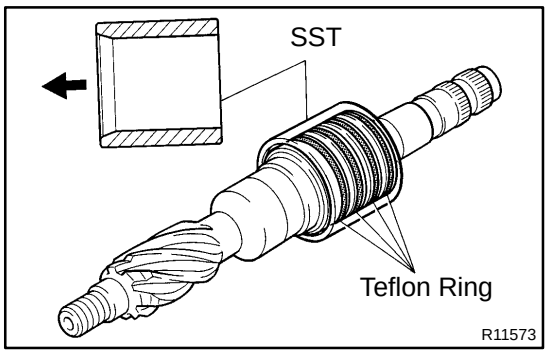

(e) Carefully slide the tapered end of SST over the teflon rings until the rings fit to the steering rack.
SST 09631–20081

NOTICE:

Be careful not to damage the rings.

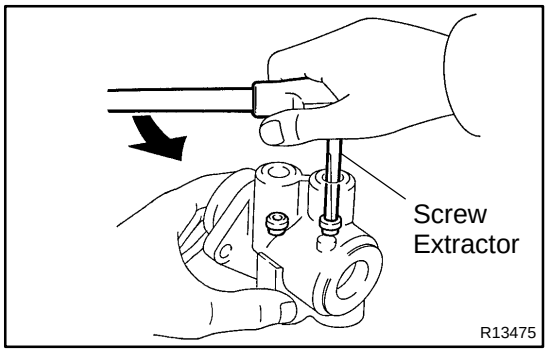

7. IF NECESSARY, REPLACE UNION SEATS

(a) Using a screw extractor, remove the 2 union seats from the control valve housing.

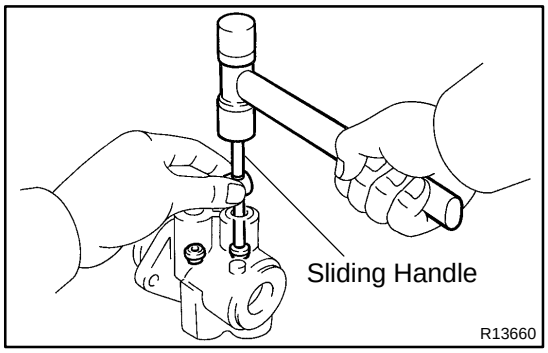

(b) Using a plastic hammer and sliding handle, lightly tap in 2 new union seats.

NOTICE:

Before installing the union seat, remove dust sticking to the control valve housing.

SR05E–04

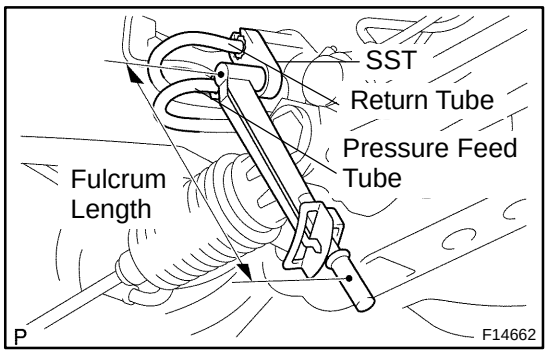

INSTALLATION

1. INSTALL PS GEAR ASSEMBLY

Install the PS gear assembly with the 2 gear assembly set bolts, washers and nuts.

Torque: 201 N·m (2,050 kgf·cm, 148 ft·lbf)

2. CONNECT PRESSURE FEED TUBE AND RETURN TUBE

Using SST, connect the pressure feed tube and return tube.

SST 09023–12700

Pressure feed tube:

Torque: 33 N·m (337 kgf·cm, 24 ft·lbf)

Return tube:

Torque: 36 N·m (365 kgf·cm, 26 ft·lbf)

HINT:

- Use a torque wrench with a fulcrum length of 300 mm (11.81 in.).
- This torque value is effective in case that SST is parallel to a torque wrench.

3. CONNECT INTERMEDIATE NO. 2 SHAFT (See page SR–21)

4. CONNECT RH AND LH TIE ROD ENDS (See page SA–110)

5. POSITION FRONT WHEELS FACING STRAIGHT AHEAD

HINT:

Do it with the front of the vehicle jacked up.

6. CENTER SPIRAL CABLE (See page SR–21)

7. INSTALL STEERING WHEEL

(a) Align the matchmarks on the wheel and steering column main shaft.

(b) Temporarily tighten the wheel set nut.

(c) Connect the connector.

8. BLEED POWER STEERING SYSTEM (See page SR–4)

9. CHECK STEERING WHEEL CENTER POINT

10. TORQUE STEERING WHEEL SET NUT

Torque: 50 N·m (500 kgf·cm, 35 ft·lbf)

11. INSTALL STEERING WHEEL PAD (See page SR–21)

12. CHECK FRONT WHEEL ALIGNMENT (See page SA–6)

SR05D–03

REASSEMBLY

NOTICE:

When using a vise, do not overtighten it.

1. COAT PARTS INDICATED BY ARROWS WITH POWER STEERING FLUID OR MOLYBDENUM DISULFIDE LITHIUM BASE GREASE (See pages SR–54)

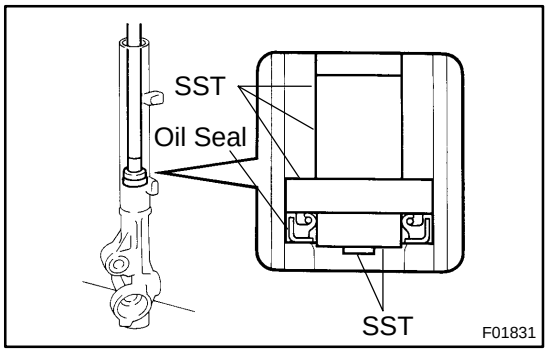

2. INSTALL OIL SEAL

(a) Coat a new oil seal lip with power steering fluid.

(b) Using SST, press in the oil seal.

SST 09950–60010 (09951–00250, 09951–00420, 09952–06010), 09950–70010 (09951–07360)

NOTICE:

- **Make sure to install the oil seal facing the correct direction.**
- **Take care that the oil seal does not get reversed as you install it.**

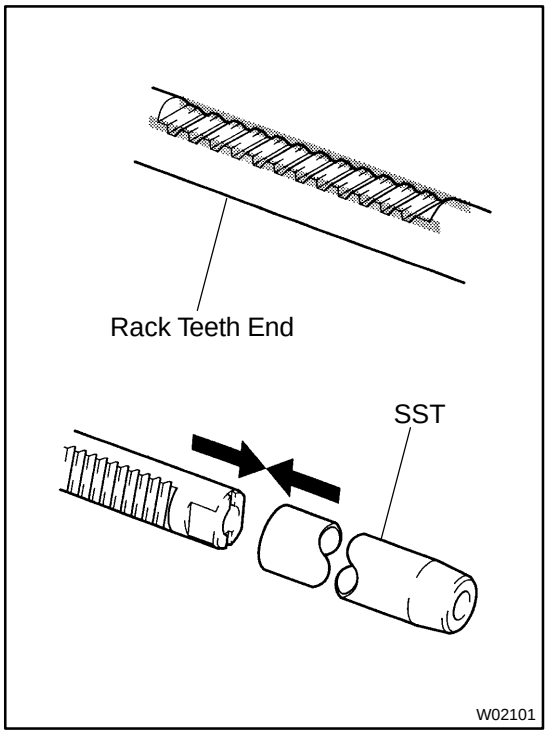

3. INSTALL STEERING RACK

(a) Install SST to the rack.

SST 09631–20102

HINT:

If necessary, scrape the burrs off the rack teeth end and burnish.

(b) Coat SST with power steering fluid.

(c) Install the rack into the rack housing.

(d) Remove the SST.

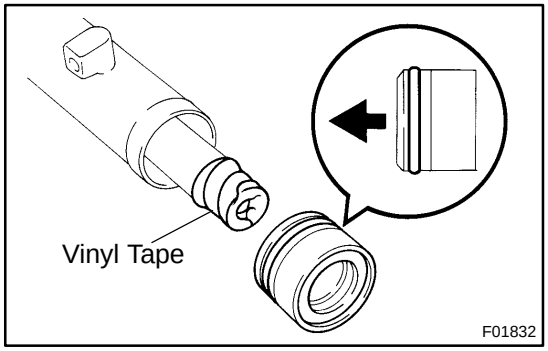

4. INSTALL BUSHING

(a) Coat a new O–ring with power steering fluid and install it to the bushing.

(b) To prevent oil seal lip damage, wind vinyl tape on the steering rack end, and apply power steering fluid.

(c) Install the bushing.

NOTICE:

- **Make sure to install the bushing facing the correct direction.**
- **Be careful not to damage the oil seal lip.**

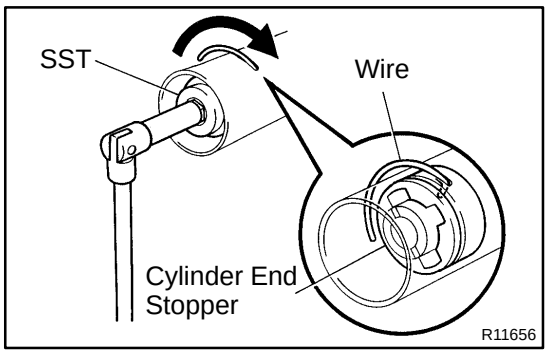

5. INSTALL CYLINDER END STOPPER

(a) Align the installation hole for the wire of the stopper with the slot of the rack housing.

(b) Install a new wire into the cylinder end stopper.

(c) Using SST, turn the cylinder end stopper clockwise 450 ± 50°.
SST 09631–10021

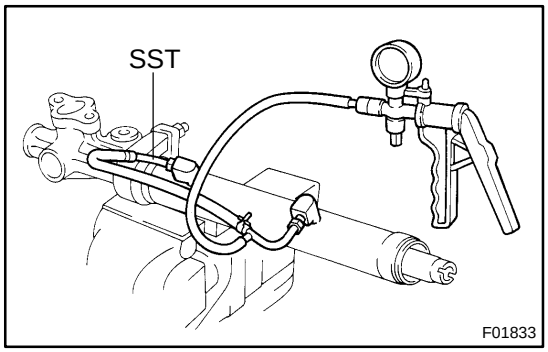

6. AIR TIGHTNESS TEST

(a) Install SST to the unions of the rack housing.
SST 09631–12071

(b) Apply 53 kPa (400 mmHg, 15.75 in.Hg) of vacuum for about 30 seconds.

(c) Check that there is no change in the vacuum.

If there is change in the vacuum, check the installation of the oil seals.

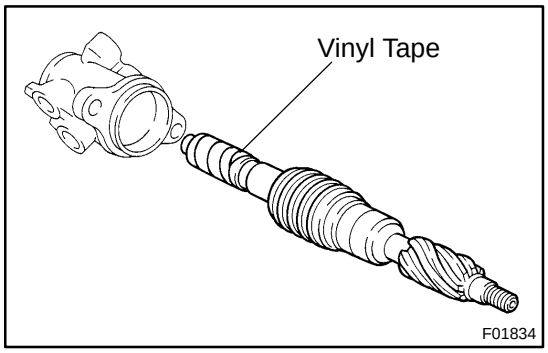

7. INSTALL CONTROL VALVE ASSEMBLY

(a) Coat the teflon rings with power steering fluid.

(b) To prevent oil seal lip damage, wind vinyl tape on the serrated part of the control valve shaft.

(c) Install the control valve assembly into the control valve housing.

NOTICE:

Be careful not to damage the teflon rings and oil seal lip.

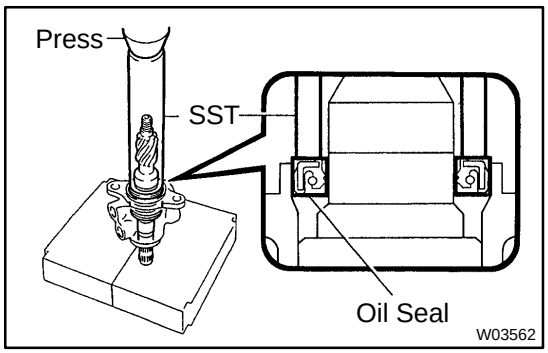

8. INSTALL OIL SEAL

(a) Coat a new oil seal lip with power steering fluid.

(b) Using SST, press in the oil seal.
SST 09612–22011

NOTICE:

Make sure to install the oil seal facing the correct direction.

9. INSTALL CONTROL VALVE HOUSING WITH CONTROL VALVE ASSEMBLY

(a) Place a new gasket on the rack housing.

(b) Align the matchmarks on the control valve housing and rack housing.

(c) Install the contrl valve housing with the 2 blots.
Torque: 18 N·m (185 kgf·cm, 13 ft·lbf)

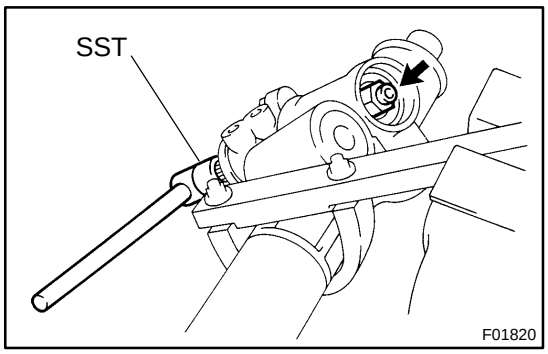

10. INSTALL SELF–LOCKING NUT

Using SST to stop the control valve shaft rotating, torque a new self–locking nut.

SST 09616–00011

Torque: 25 N·m (250 kgf·cm, 18 ft·lbf)

11. INSTALL DUST COVER

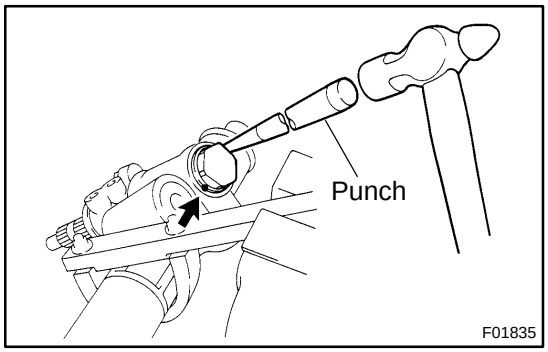

12. INSTALL RACK HOUSING CAP

(a) Apply sealant to 2 or 3 threads of the cap.

Sealant:
Part No.08833–00080, THREE BOND 1344, LOCTITE 242 or equivalent

(b) Install the rack housing cap.

Torque: 59 N·m (600 kgf·cm, 43 ft·lbf)

(c) Using a punch and hammer, stake the 2 parts of the rack housing cap.

13. INSTALL RACK GUIDE SEAT, RACK GUIDE, RACK GUIDE SPRING AND RACK GUIDE SPRING CAP

(a) Install the rack guide seat to the rack guide.

(b) Apply sealant to 2 or 3 threads of the rack guide spring cap.

Sealant:
Part No.08833–00080, THREE BOND 1344, LOCTITE 242 or equivalent

(c) Temporarily install the rack guide, rack guide spring and rack guide spring cap.

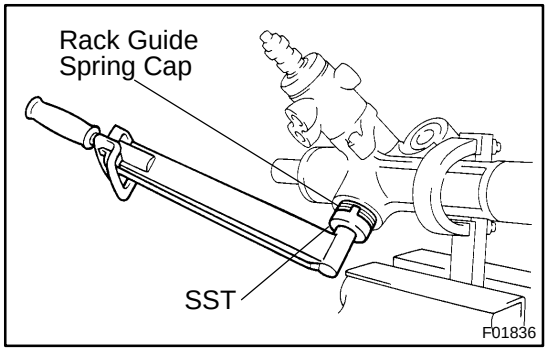

14. ADJUST TOTAL PRELOAD

(a) To prevent the steering rack teeth from damaging the oil seal lip, temporarily install the RH and LH rack ends.

(b) Using SST, torque the rack guide spring cap.

SST 09631–10021

Torque: 25 N·m (250 kgf·cm, 18 ft·lbf)

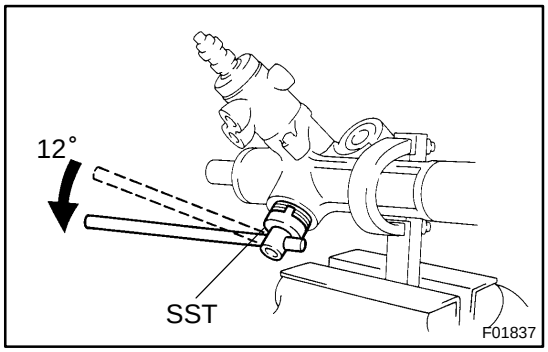

(c) Using SST, return the cap 12°.

SST 09631–10021

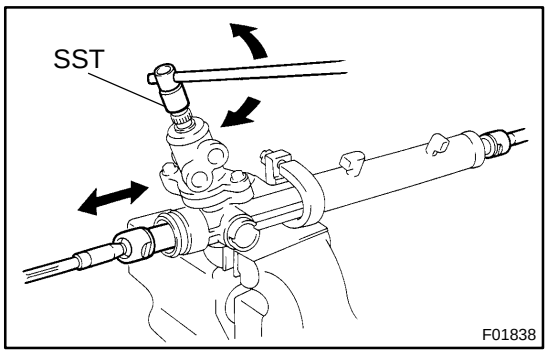

(d) Using SST, turn the control valve shaft right and left 1 or 2 times.
SST 09616–00011

(e) Using SST, loosen the cap until the rack guide spring is not functioning.
SST 09631–10021

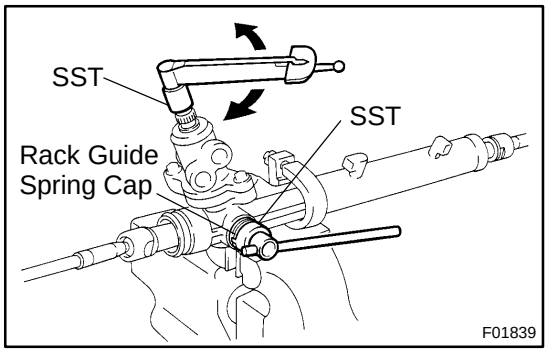

(f) Using SST and a torque wrench, tighten the cap until the preload is within specification.
SST 09616–00011, 09631–10021
Preload (turning):
0.9 – 1.5 N·m (9 – 15 kgf·cm, 7.8 – 13.0 in.·lbf)

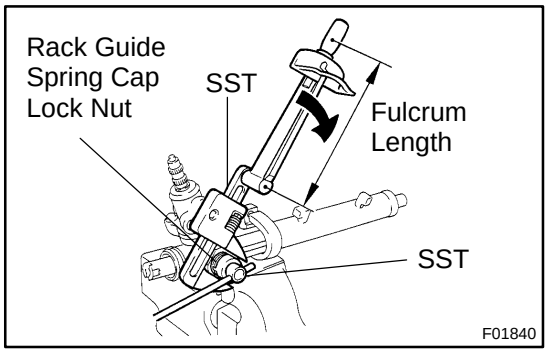

15. INSTALL RACK GUIDE SPRING CAP LOCK NUT

(a) Apply sealant to 2 or 3 threads of the rack guide spring cap lock nut.
Sealant:
Part No.08833–00080, THREE BOND 1344, LOCTITE 242 or equivalent

(b) Using SST to hold the rack guide spring cap, and using SST, insall the lock nut.
SST 09631–10021, 09922–10010
Torque: 50 N·m (513 kgf·cm, 37 ft·lbf)

NOTICE:
Use SST 09922–10010 in the direction shown in the illustration.

HINT:
Use a torque wrench with a fulcrum length of 345 mm (13.58 in.).

(c) Recheck the total preload.
Preload (turning):
0.9 – 1.5 N·m (9 – 15 kgf·cm, 7.8 – 13.0 in.·lbf)

(d) Remove the RH and LH rack ends.

16. INSTALL RACK HOUSING NO.2 BRACKET AND GROMMET

(a) Install the rack housing No.2 grommet.

(b) Align the matchmarks on the rack housing No.2 bracket and rack housing.

(c) Install the rack housing No.2 bracket with the bolt.
Torque: 61 N·m (620 kgf·cm, 45 ft·lbf)

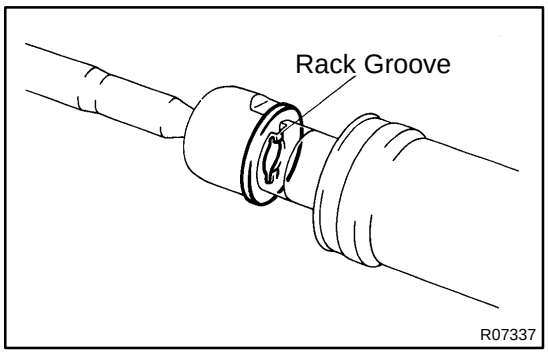

17. INSTALL RH AND LH CLAW WASHERS AND RACK ENDS

(a) Install a new claw washer, and temporarily install the rack end.

HINT:

Align the claws of the claw washer with the steering rack grooves.

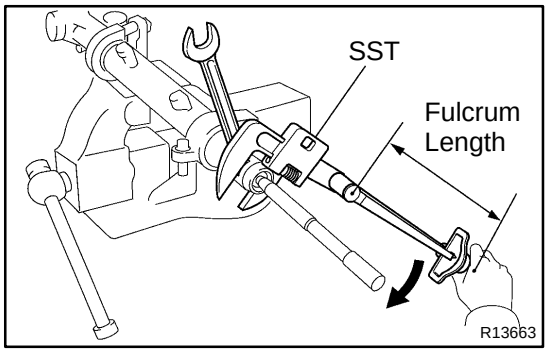

(b) Using a spanner to hold the steering rack steady, and using SST, torque the rack end.

SST 09922–10010

Torque: 60 N·m (615 kgf·cm, 45 ft·lbf)

NOTICE:

Use SST 09922–10010 in the direction shown in the illustration.

HINT:

Use a torque wrench with a fulcrum length of 345 mm (13.58 in.).

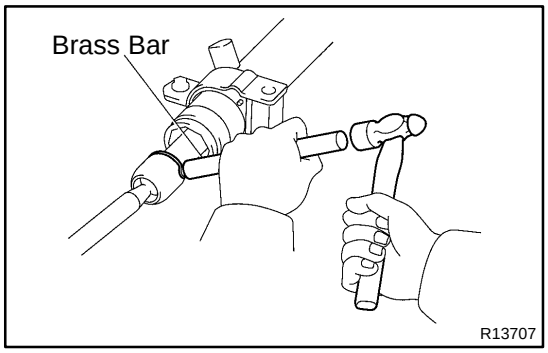

(c) Using a brass bar and hammer, stake the claw washer.

NOTICE:

Avoid any impact to the rack.

(d) Enploy the same manner described above to the other side.

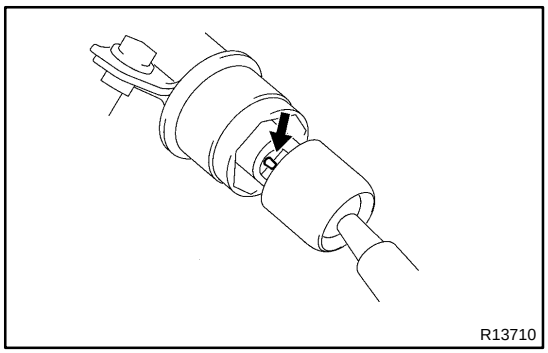

18. INSTALL RH AND LH RACK BOOTS, CLAMPS AND CLIPS

(a) Ensure that the steering rack hole is not clogged with grease.

HINT:

If the steering rack hole is clogged, the pressure inside the boot will change after it is assembled and the steering wheel is turned.

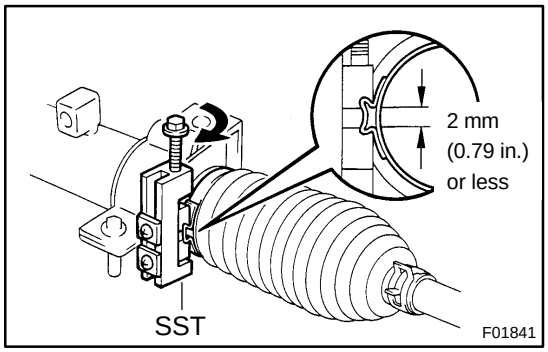

(b) Install the rack boot, clip and a new clamp.

NOTICE:

Be careful not to damage or twist the boot.

(c) Using SST, tighten the clamp as shown in the illustration.

SST 09521–24010

19. INSTALL RH AND LH TIE ROD ENDS AND LOCK NUTS

(a) Screw the lock nut and tie rod end onto the rack end until the matchmarks are aligned.

(b) After adjusting toe–in, torque the nut (See page SA–6).

Torque: 54 N·m (550 kgf·cm, 40 ft·lbf)

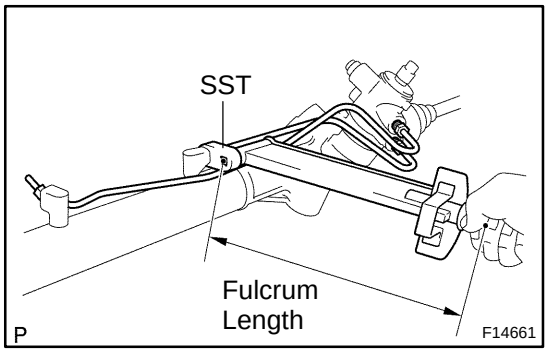

20. INSTALL 2 TURN PRESSURE TUBES

(a) Coat 4 new O–rings with power steering fluid and install them to the 2 turn pressure tubes.

(b) Using SST, install the 2 turn pressure tubes.

SST 09023–38200

Torque: 12 N·m (122 kgf·cm, 9 ft·lbf)

HINT:

- Use a torque wrench with a fulcrum length of 250 mm (9.84 in.).
- This torque value is effective in case that SST is parallel to a torque wrench.

SR05A–04

REMOVAL

NOTICE:

Remove the steering wheel assembly before the steering gear removal, because there is possibility of breaking of the spiral cable.

1. **PLACE FRONT WHEELS FACING STRAIGHT AHEAD**
2. **REMOVE STEERING WHEEL PAD (See page SR–14)**
3. **REMOVE STEERING WHEEL (See page SR–14)**
4. **DISCONNECT RH AND LH TIE ROD ENDS (See page SA–110)**
5. **DISCONNECT INTERMEDIATE NO. 2 SHAFT (See page SR–14)**

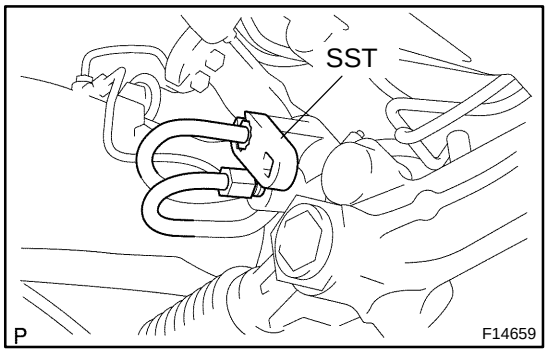

6. **REMOVE PRESSURE FEED TUBE AND RETURN TUBE**

Using SST, disconnect the pressure feed tube and return tube.

SST 09023–12700

7. **REMOVE PS GEAR ASSEMBLY**

Remove the 2 PS gear assembly set bolts, nuts and washers.

POWER STEERING GEAR (4WD and PRE RUNNER)

SR05F–03

COMPONENTS

HINT:

Pre runner is the described below.

RZN191L–TRPDKAB, RZN196L–CRPDKAB, RZN196L–PRPDKAB, VZN195L–CRPDKAB, VZN195L–PRPDKAB

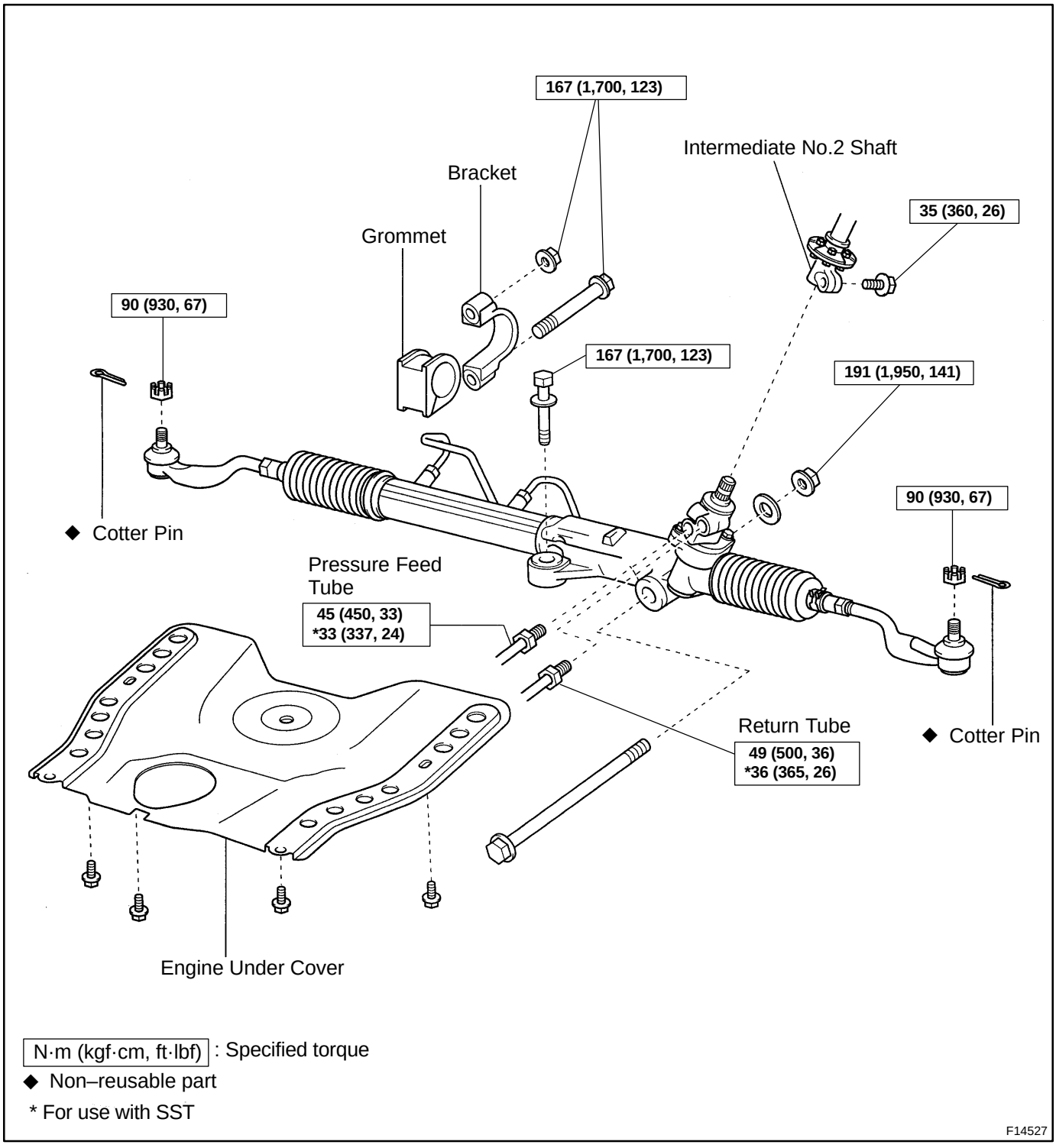

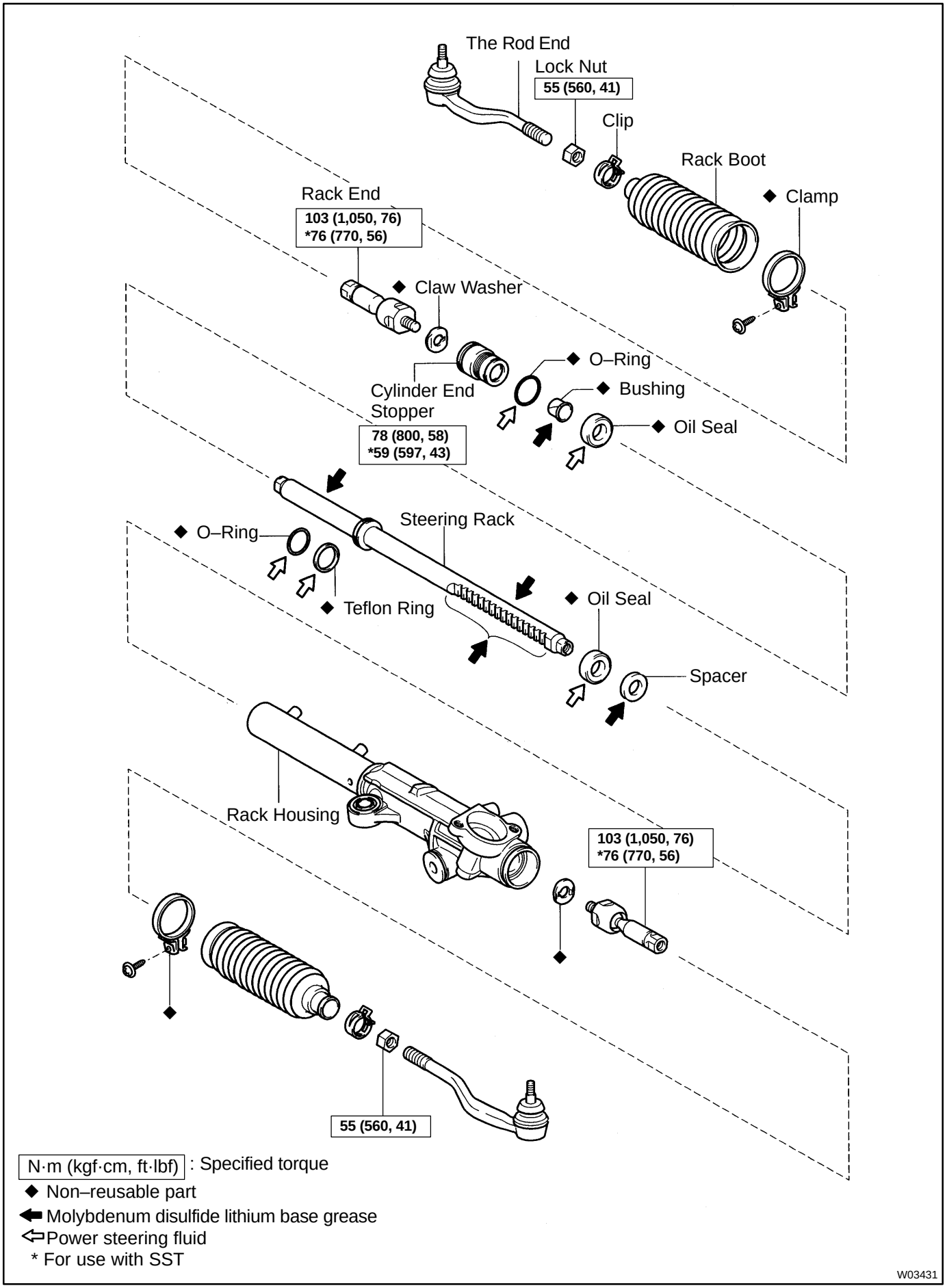
The Rod End
Lock Nut
55 (560, 41)
Clip
Rack Boot
Clamp
Rack End
103 (1,050, 76)
*76 (770, 56)
Claw Washer
O–Ring
Bushing
Cylinder End
Stopper
78 (800, 58)
*59 (597, 43)
Oil Seal
Steering Rack
O–Ring
Teflon Ring
Oil Seal
Spacer
Rack Housing
103 (1,050, 76)
*76 (770, 56)
55 (560, 41)
N·m (kgf·cm, ft·lbf) : Specified torque
◆ Non–reusable part
Molybdenum disulfide lithium base grease
Power steering fluid
* For use with SST
W03431

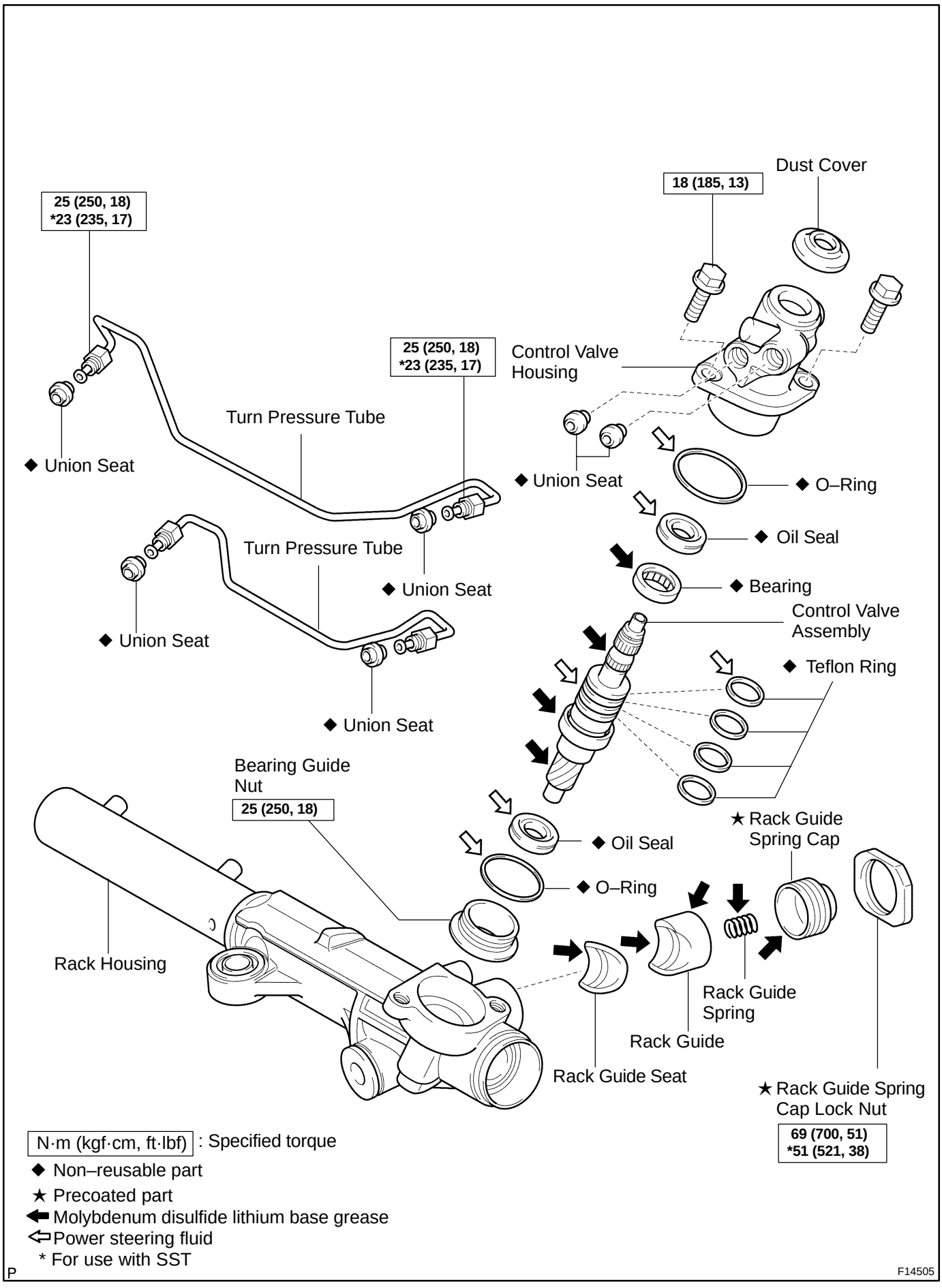
Dust Cover
18 (185, 13)
25 (250, 18)
*23 (235, 17)
Control Valve
Housing
25 (250, 18)
*23 (235, 17)
Turn Pressure Tube
◆ Union Seat
◆ Union Seat
◆ O–Ring
◆ Oil Seal
◆ Bearing
Turn Pressure Tube
◆ Union Seat
◆ Union Seat
◆ Union Seat
Control Valve
Assembly
◆ Teflon Ring
Bearing Guide
Nut
25 (250, 18)
★ Rack Guide
Spring Cap
◆ Oil Seal
◆ O–Ring
Rack Housing
Rack Guide
Spring
Rack Guide
Rack Guide Seat
★ Rack Guide Spring
Cap Lock Nut
69 (700, 51)
*51 (521, 38)
N·m (kgf·cm, ft·lbf) : Specified torque
◆ Non–reusable part
★ Precoated part
Molybdenum disulfide lithium base grease
Power steering fluid
* For use with SST
P
F14505

SR05H–03

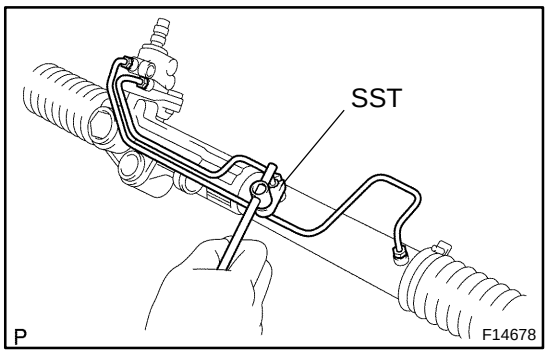

DISASSEMBLY

NOTICE:

When using a vise, do not overtighten it.

1. REMOVE 2 TURN PRESSURE TUBES

(a) Using SST, remove the 2 turn pressure tubes.
SST 09023–38200

(b) Remove the 2 union seats from the rack housing.

(c) Remove the 2 union seats from the control valve housing.

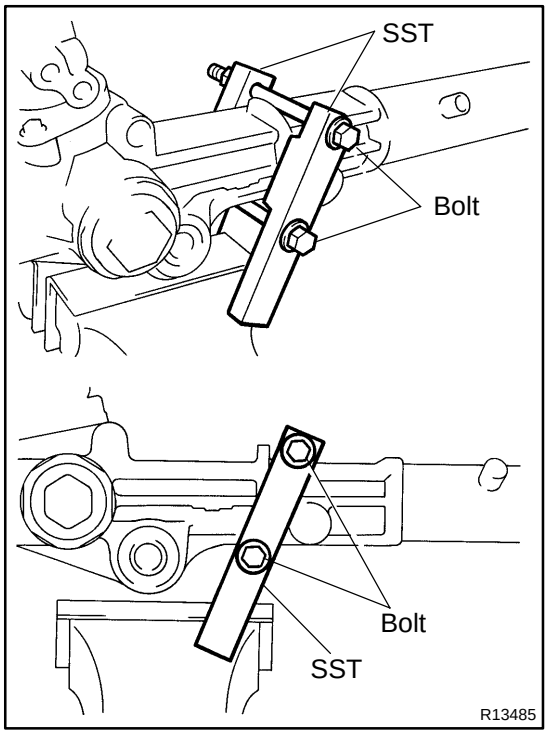

2. SECURE PS GEAR ASSEMBLY IN VISE

Using SST and 2 bolts, secure the gear assembly in a vise, as shown in the illustration.

SST 09612–00012

Reference:
Bolt: 90105–10346
Nut: 90170–10198

HINT:

Use 2 of the same type of SST.

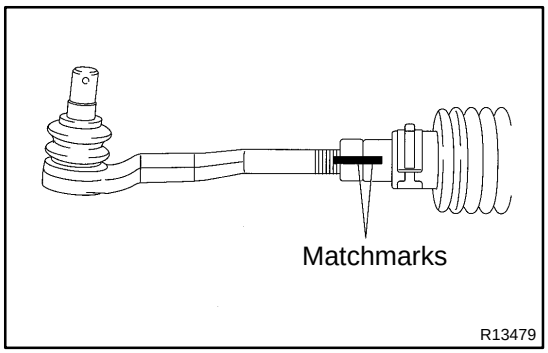

3. REMOVE RH AND LH TIE ROD ENDS AND LOCK NUTS

(a) Place matchmarks on the tie rod end and rack end.

(b) Loosen the look nut, and remove the tie rod end and lock nut.

(c) Employ the same manner described above to the other side.

4. REMOVE RH AND LH CLIPS, RACK BOOTS AND CLAMPS

(a) Remove the screw and loosen the clamp.

(b) Remove the clip, rack boot and clamp.

(c) Employ the same manner described above to the other side.

NOTICE:

Be careful not to damage the boot.

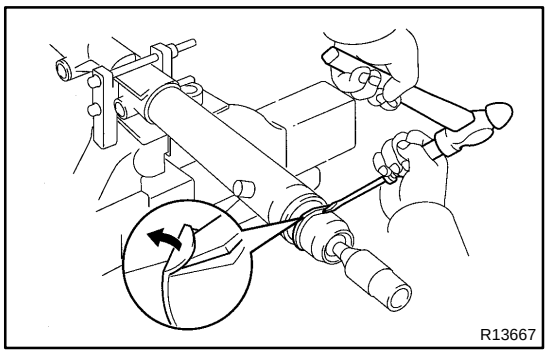

5. REMOVE RH AND LH RACK ENDS AND CLAW WASHERS

(a) Using a screwdriver and hammer, unstake the washer.

NOTICE:

Avoid any impact to the steering rack.

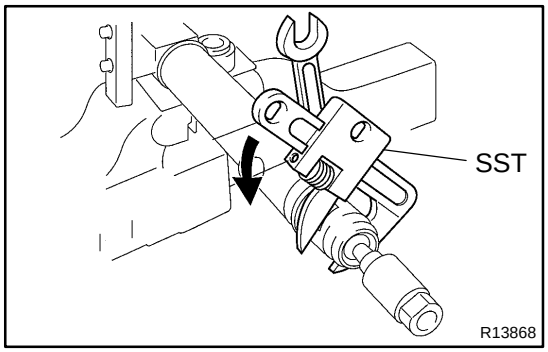

(b) Using a spanner to hold the steering rack steady, and using SST, remove the rack end.

SST 09922–10010

NOTICE:

Use SST 09922–10010 in the direction shown in the illustration.

(c) Remove the claw washer.

(d) Employ the same manner described above to the other side.

HINT:

Mark the RH and LH rack ends.

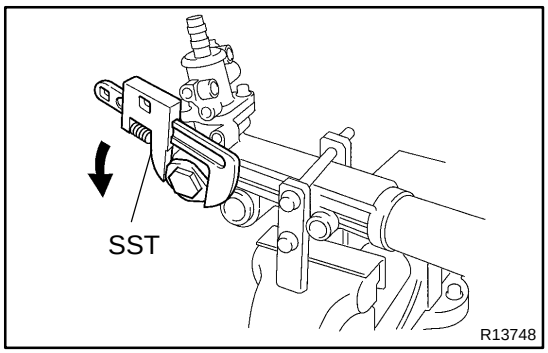

6. REMOVE RACK GUIDE SPRING CAP LOCK NUT

Using SST, remove the rack guide spring cap lock nut.

SST 09922–10010

NOTICE:

Use SST 09922–10010 in the direction shown in the illustration.

7. REMOVE RACK GUIDE SPRING CAP

8. REMOVE RACK GUIDE SPRING, RACK GUIDE AND RACK GUIDE SEAT

9. REMOVE DUST COVER

10. REMOVE CONTROL VALVE HOUSING WITH CONTROL VALVE ASSEMBLY

(a) Place matchmarks on the control valve housing and rack housing.

(b) Remove the 2 bolts.

(c) Pull out the control valve housing with the control valve assembly.

(d) Remove the O–ring from the rack housing.

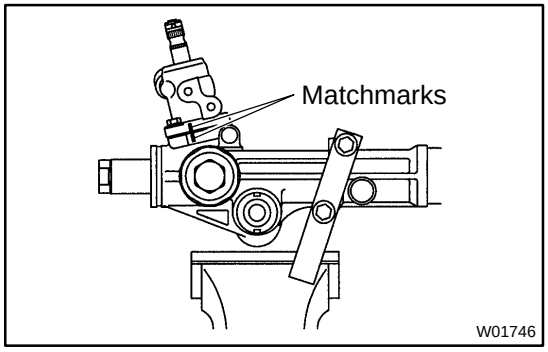

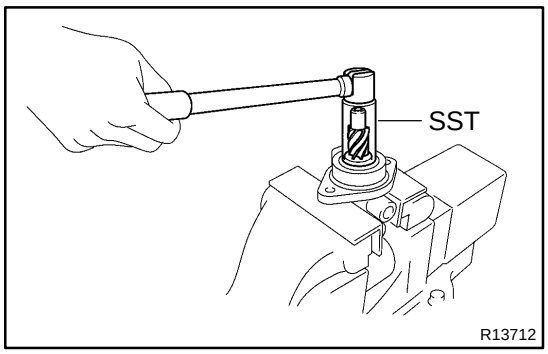

11. REMOVE CONTROL VALVE ASSEMBLY

(a) Using SST, loosen the bearing guide nut.
SST 09631–20060

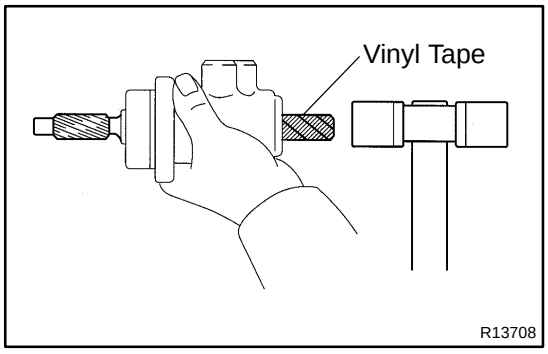

(b) Wind vinyl tape to the control valve shaft.

(c) Using a plastic hammer, tap out the control valve assembly with the bearing guide nut from the control valve housing.

NOTICE:

Be careful not to damage the oil seal lip.

(d) Remove the bearing guide nut from the control valve assembly.

NOTICE:

Be careful not to damage the oil seal lip.

(e) Remove the O–ring from the bearing guide nut.

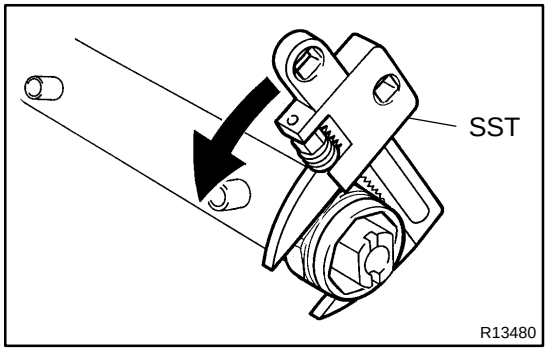

12. REMOVE CYLINDER END STOPPER

(a) Using SST, remove the cylinder end stopper.
SST 09922–10010

NOTICE:

Use SST 09922–10010 in the direction shown in the illustration.

(b) Remove the O–ring from the cylinder end stopper.

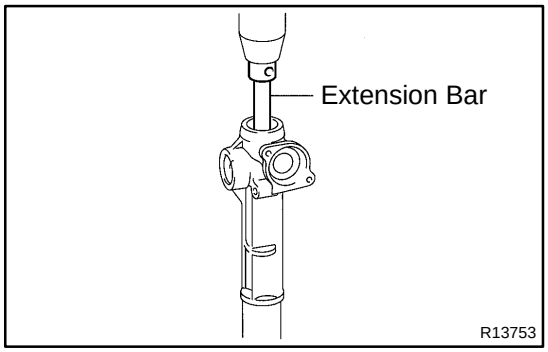

13. REMOVE STEERING RACK AND OIL SEAL

(a) Using an extension bar and socket wrench (24 mm), press out the rack and oil seal.

NOTICE:

Take care not to drop the rack.

(b) Remove the oil seal from the rack.

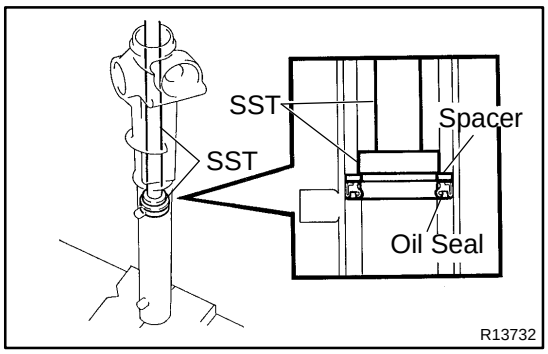

14. REMOVE OIL SEAL AND SPACER

Using SST, press out the oil seal and spacer.

SST 09950–60010 (09951–00360),
09950–70010 (09951–07360)

SR05I–04

INSPECTION

1. INSPECT STEERING RACK

(a) Using a dial indicator, check the rack for runout and for teeth wear and damage.

Maximum runout: 0.3 mm (0.0118 in.)

(b) Check the back surface for wear and damage.

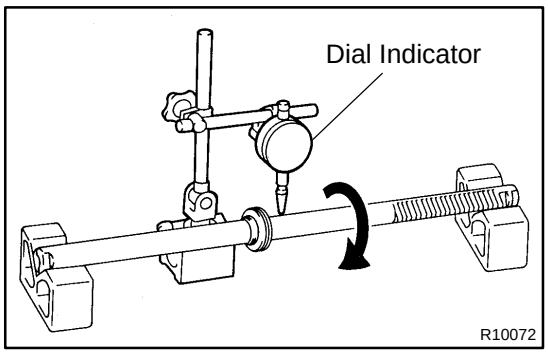

2. IF NECESSARY, REPLACE OIL SEAL AND BEARING

(a) Using SST, press out the oil seal and bearing from the control valve housing.

SST 09950–60010 (09951–00260), 09950–70010 (09951–07150)

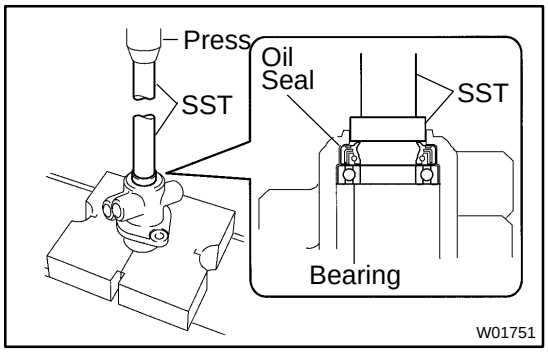

(b) Coat a new oil seal lip with power steering fluid.

(c) Using SST, press in the oil seal.

SST 09950–60010 (09951–00180, 09951–00330, 09952–06010), 09950–70010 (09951–07150)

NOTICE:

Make sure to install the oil seal facing the correct direction.

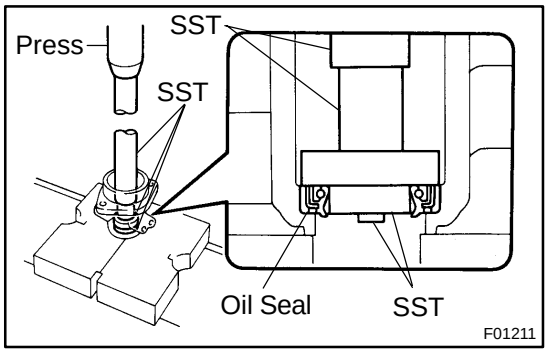

(d) Coat a new bearing with molybdenum disulfide lithium base grease.

(e) Using SST, press in the bearing.

SST 09950–60010 (09951–00330), 09950–70010 (09951–07150)

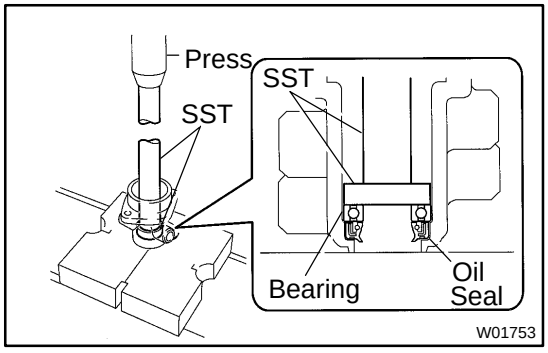

3. IF NECESSARY, REPLACE OIL SEAL

(a) Using SST, press out the oil seal from the bearing guide nut.

SST 09950–60010 (09951–00320), 09950–70010 (09951–07100)

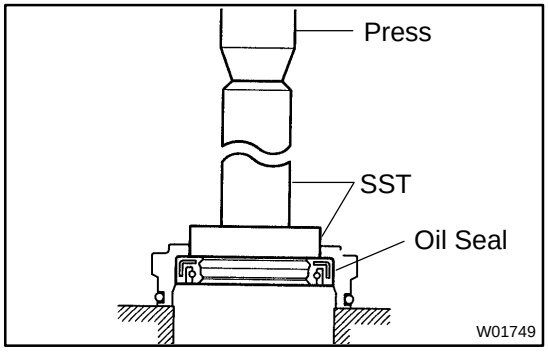

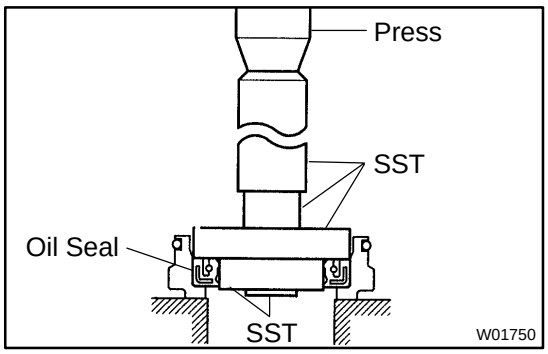

(b) Coat a new oil seal lip with power steering fluid.
(c) Using SST, press in the oil seal to the bearing guide nut.
SST 09950–60010 (09951–00280, 09951–00360, 09952–06010), 09950–70010 (09951–07100)

NOTICE:
Make sure to install the oil seal facing the correct direction.

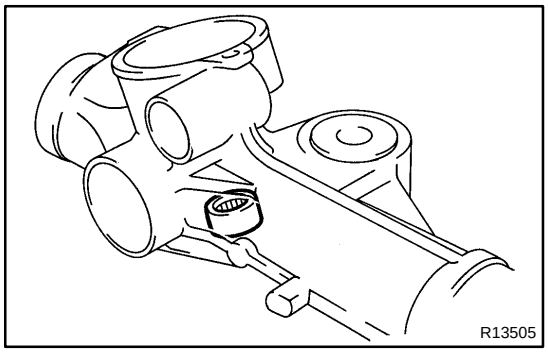

4. INSPECT BEARING
(a) Check the needle roller bearing of the rack housing for pitmarks or damage.

If faulty, replace the rack housing.
(b) Coat the inside of the bearing with molybdenum disulfide lithium base grease.

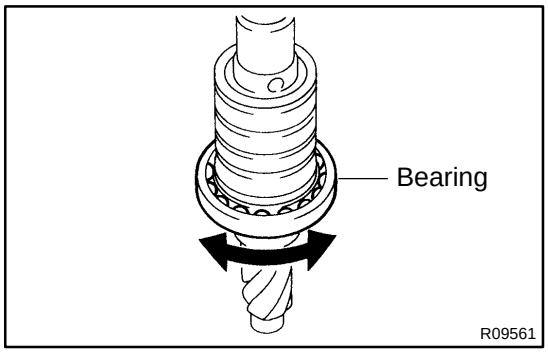

5. INSPECT BEARING
(a) Check the bearing rotation condition and check for abnormal noise.

If the bearing is worn or damaged, replace the control valve assembly.
(b) Coat the bearing with molybdenum disulfide lithium base grease.

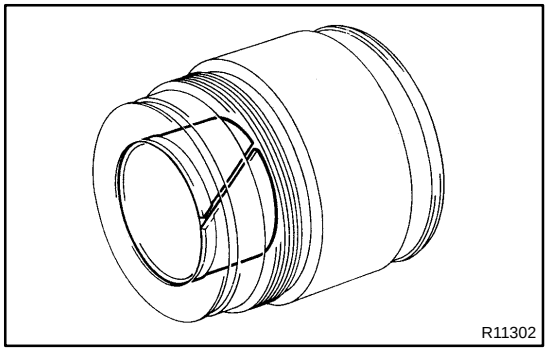

6. INSPECT BUSHING
(a) Check the inside of the bushing of the cylinder end stopper for cracks.

If faulty, replace the bushing.
(b) Coat the inside of the bushing with molybdenum disulfide lithium base grease.

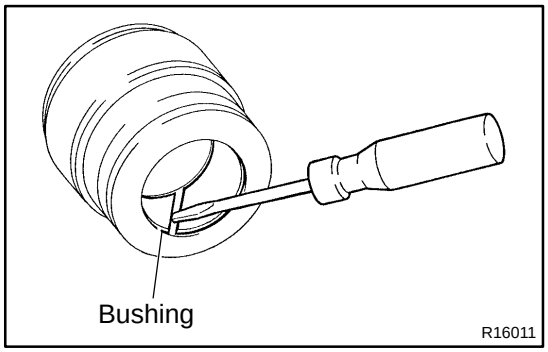

7. IF NECESSARY, REPLACE BUSHING
(a) Using a screwdriver, remove the bushing from the cylinder end stopper.

NOTICE:
Be careful not to damage the cylinder end stopper.
(b) Coat the inside of a new bushing with molybdenum disulfide lithium base grease.
(c) Install the bushing.

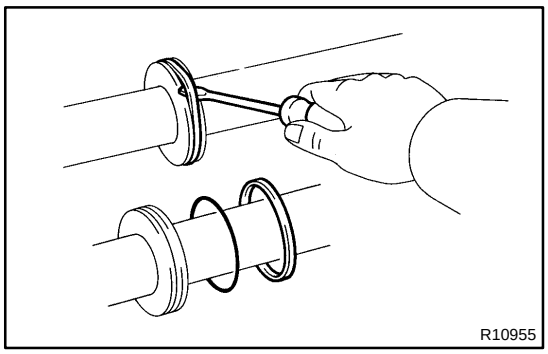

8. IF NECESSARY, REPLACE TEFLON RING AND O–RING

(a) Using a screwdriver, remove the teflon ring and O–ring from the steering rack.

NOTICE:

Be careful not to damage the groove for the ring.

(b) Coat a new O–ring with power steering fluid and install it.

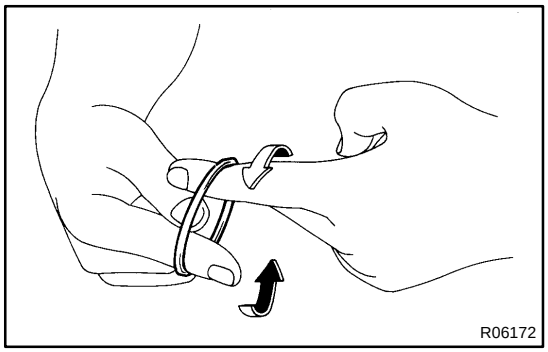

(c) Expand a new teflon ring with your fingers.

NOTICE:

Be careful not to overexpand the ring.

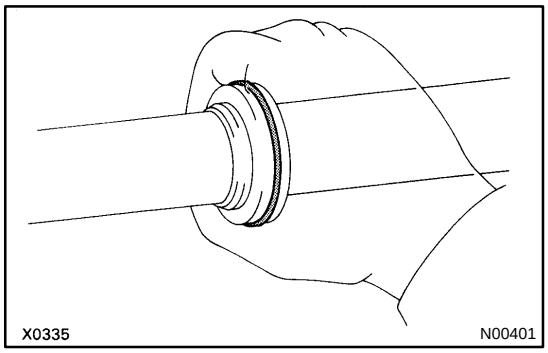

(d) Coat the teflon ring with power steering fluid.

(e) Install the teflon ring to the rack, and settle it down with your fingers.

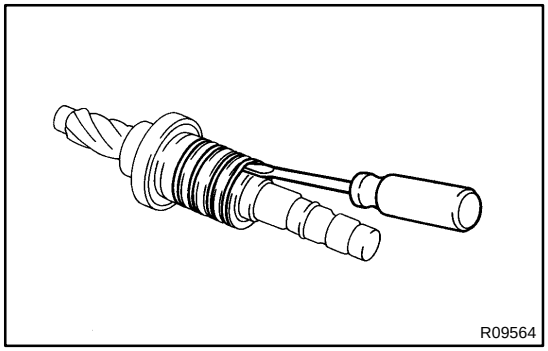

9. IF NECESSARY, REPLACE TEFLON RINGS

(a) Using a screwdriver, remove the 4 teflon rings from the control valve assembly.

NOTICE:

Be careful not to damage the grooves for the teflon ring.

(b) Expand 4 new teflon rings with your fingers.

NOTICE:

Be careful not to overexpand the teflon ring.

(c) Coat the teflon rings with power steering fluid.

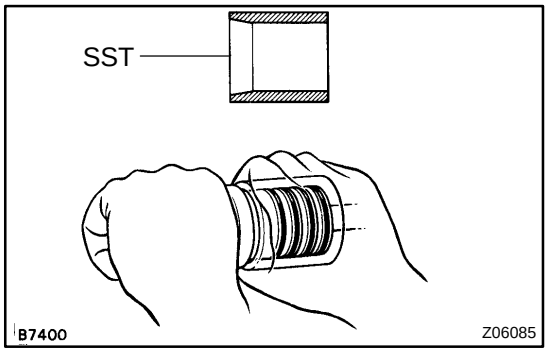

(d) Install the teflon rings to the control valve assembly, and settle them down with your fingers.

(e) Carefully slide the tapered end of SST over the teflon rings until the ring fits to the steering rack.

SST 09631–20081

NOTICE:

Be careful not to damage the rings.

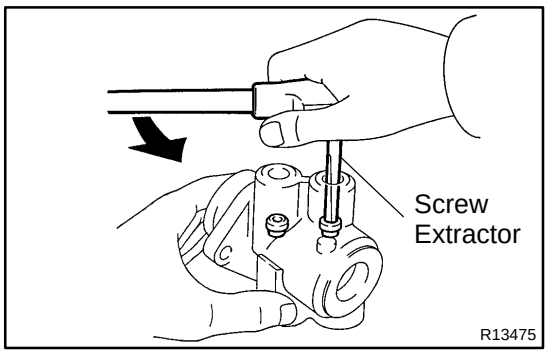

10. IF NECESSARY, REPLACE UNION SEATS

(a) Using a screw extractor, remove the 2 union seats from the control valve housing.

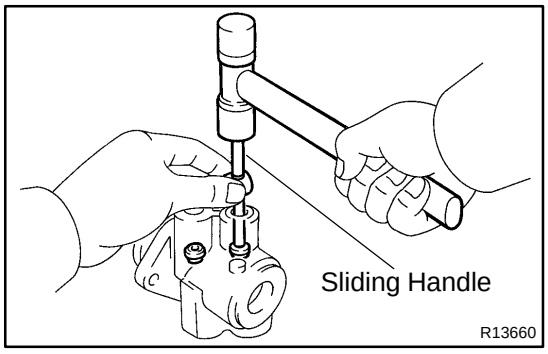

(b) Using a plastic hammer and sliding handle, lightly tap in 2 new union seats.

NOTICE:

Before installing the union seat, remove dust sticking to the control valve housing.

SR05K–04

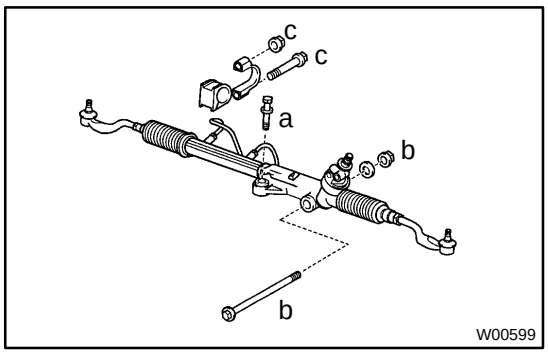

INSTALLATION

1. INSTALL GROMMET AND BRACKET

2. INSTALL PS GEAR ASSEMBLY

(a) Install the PS gear assembly.

(b) Install the gear assembly set bolt ”a”.
Torque: 167 N·m (1,700 kgf·cm, 123 ft·lbf)

(c) Install the gear assembly set bolt ”b” and nut ”b”.
Torque: 191 N·m (1,950 kgf·cm, 141 ft·lbf)

(d) Install the bolt ”c” and nut ”c” to the bracket.
Torque: 167 N·m (1,700 kgf·cm, 123 ft·lbf)

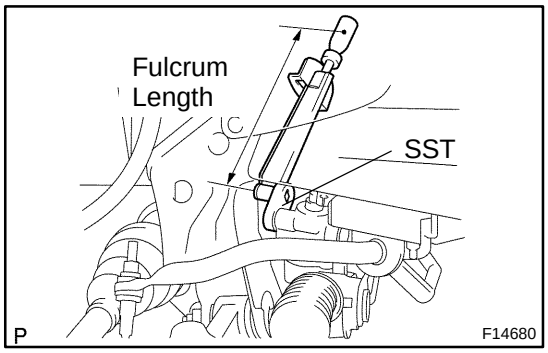

3. CONNECT PRESSURE FEED AND RETURN TUBES

Using SST, connect the pressure tube and return tube.

SST 09023–12700

Pressure feed tube:
Torque: 33 N·m (337 kgf·cm, 24 ft·lbf)
Return tube:
Torque: 36 N·m (365 kgf·cm, 26 ft·lbf)

HINT:

- Use a torque wrench with a fulcrum length of 300 mm (11.81 in.).
- This torque value is effective in case that SST is parallel to a torque wrench.

4. CONNECT INTERMEDIATE NO. 2 SHAFT (See page SR–21)

5. CONNECT RH AND LH TIE ROD ENDS (See page SA–115)

6. POSITION FRONT WHEEL FACING STRAIGHT AHEAD

HINT:

Do it with the front of the vehicle jacked up.

7. CENTER SPIRAL CABLE (See page SR–21)

8. INSTALL STEERING WHEEL

(a) Align the matchmarks on the wheel and steering column main shaft.

(b) Temporarily tighten the wheel set nut.

(c) Connect the connector.

9. BLEED POWER STEERING SYSTEM (See page SR–4)

10. CHECK STEERING WHEEL CENTER POINT

11. TORQUE STEERING WHEEL SET NUT
Torque: 50 N·m (500 kgf·cm, 35 ft·lbf)
12. INSTALL STEERING WHEEL PAD (See page SR–21)
13. CHECK FRONT WHEEL ALIGNMENT (See page SA–10)
14. INSTALL ENGINE UNDER COVER

Tighten the 4 bolts.

SR05J–04

REASSEMBLY

NOTICE:

When using a vise, do not overtighten it.

1. COAT PARTS INDICATED BY ARROWS WITH POWER STEERING FLUID OR MOLYBDENUM DISULFIDE LITHIUM BASE GREASE (See pages SR–73)

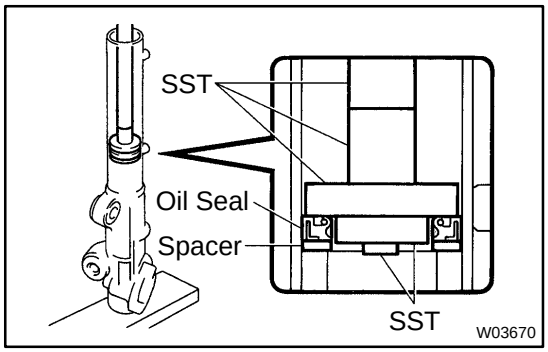

2. INSTALL SPACER AND OIL SEAL

(a) Coat a new oil seal lip with power steering fluid.

(b) Using SST, press in the oil seal and spacer.

SST 09951–60010 (09951–00330, 09951–00490, 09952–06010), 09951–70010 (09951–07360)

NOTICE:

- **Make sure to install the oil seal facing the correct direction.**
- **Take care that the oil seal does not get reversed as you install it.**

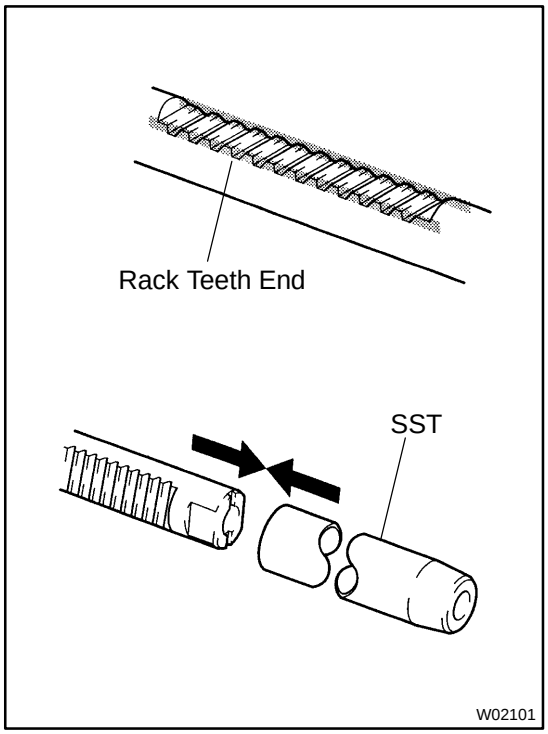

3. INSTALL STEERING RACK

(a) Install SST to the rack.

SST 09631–00350

HINT:

If necessary, scrape the burrs off the rack teeth end and burnish.

(b) Coat SST with power steering fluid.

(c) Install the rack into the rack housing.

(d) Remove the SST.

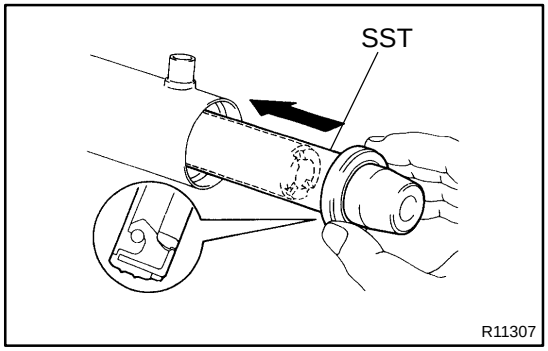

4. INSTALL OIL SEAL

(a) Install SST to the steering rack opposite end.

SST 09631–00350

(b) Coat SST with power steering fluid.

(c) Coat a new oil seal lip with power steering fluid, and install it by pushing it onto the SST without tilting.

NOTICE:

Make sure to install the oil seal facing the correct direction.

(d) Remove the SST.

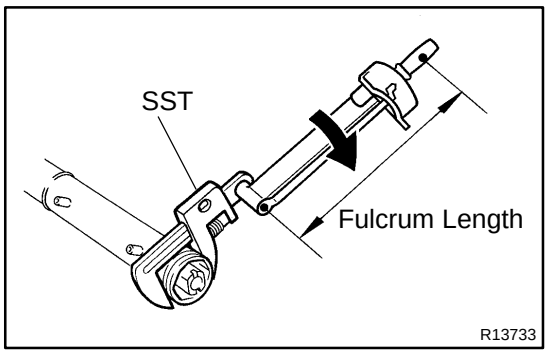

5. INSTALL CYLINDER END STOPPER

(a) Coat a new O–ring with power steering fluid, and install it to the cylinder end stopper.

(b) Using SST, torque the cylinder end stopper.
SST 09922–10010
Torque: 59 N·m (597 kgf·cm, 43 ft·lbf)

NOTICE:

Use SST 09922–10010 in the direction shown in the illustration.

HINT:

Use a torque wrench with a fulcrum length of 345 mm (13.58 in.).

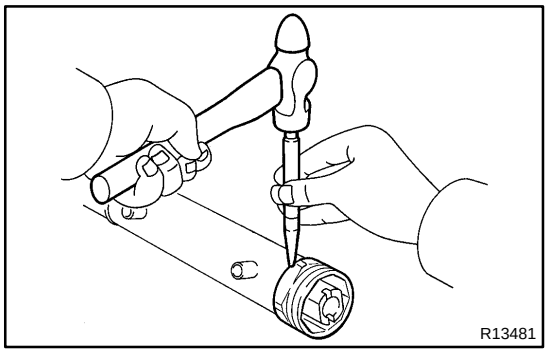

(c) Using a punch and hammer, stake the rack housing.

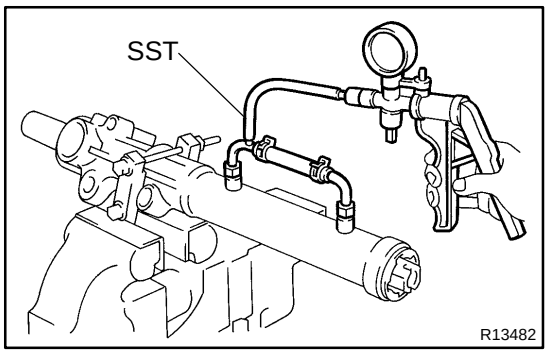

6. AIR TIGHTNESS TEST

(a) Install SST to the unions of the rack housing.
SST 09631–12071

(b) Apply 53 kPa (400 mmHg, 15.75 in.Hg) of vacuum for about 30 seconds.

(c) Check that there is no change in the vacuum.

If there is change in the vacuum, check the installation of the oil seals.

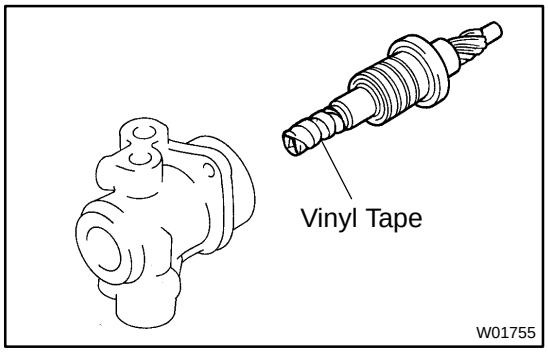

7. INSTALL CONTROL VALVE ASSEMBLY

(a) Coat the teflon rings with power steering fluid.

(b) To prevent oil seal lip damage, wind vinyl tape on the serrated part of the control valve shaft.

(c) Install the control valve assembly into the control valve housing.

NOTICE:

Be careful not to damage the teflon rings and oil seal lip.

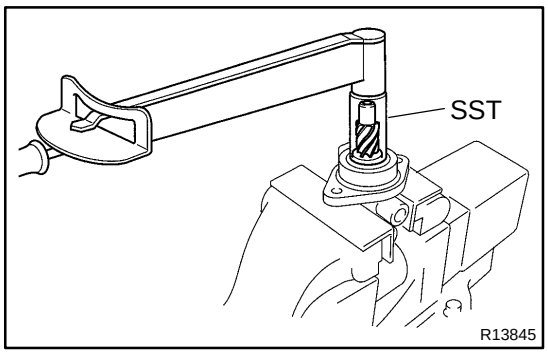

(d) Coat a new O–ring with power steering fluid, and install it to the bearing guide nut.

(e) Using SST, install the bearing guide nut.
SST 09631–20060
Torque: 25 N·m (250 kgf·cm, 18 ft·lbf)

NOTICE:
Be careful not to damage the oil seal lip.

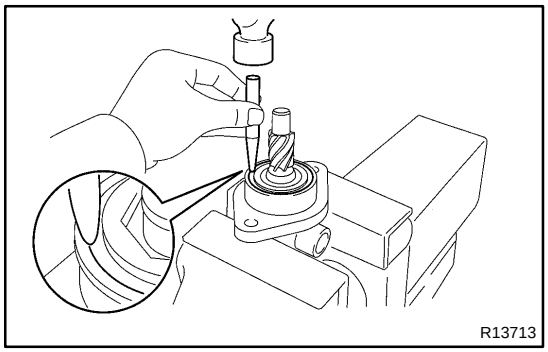

(f) Using a punch, stake the bearing guide nut.

8. INSTALL CONTROL VALVE HOUSING WITH CONTROL VALVE ASSEMBLY

(a) Coat a new O–ring with power steering fluid, and install it to the control valve housing.

(b) Align the matchmarks on the control valve housing and rack housing, and install the control valve housing with the control valve assembly to the rack housing.

(c) Install the 2 bolts.
Torque: 18 N·m (185 kgf·cm, 13 ft·lbf)

9. INSTALL DUST COVER

10. INSTALL RACK GUIDE SEAT, RACK GUIDE, RACK GUIDE SPRING AND RACK GUIDE SPRING CAP

(a) Install the rack guide seat to the rack guide.

(b) Apply sealant to 2 or 3 threads of the rack guide spring cap.
Sealant:
Part No. 08833–00080, THREE BOND 1344, LOCTITE 242 or equivalent

(c) Temporarily install the rack guide, rack guide spring and rack guide spring cap.

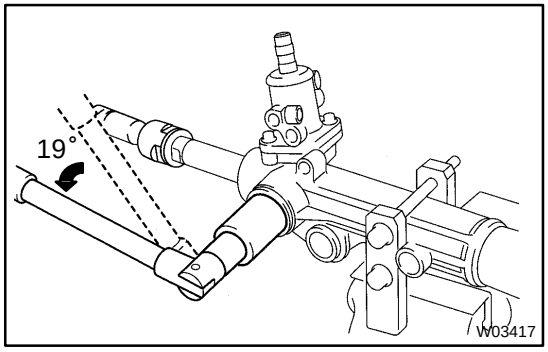

11. ADJUST TOTAL PRELOAD

(a) To prevent the steering rack teeth from damaging the oil seal lip, temporarily install the RH and LH rack ends.

(b) Torque the rack guide spring cap.
Torque: 25 N·m (250 kgf·cm, 18 ft·lbf)

(c) Return the cap 19°.

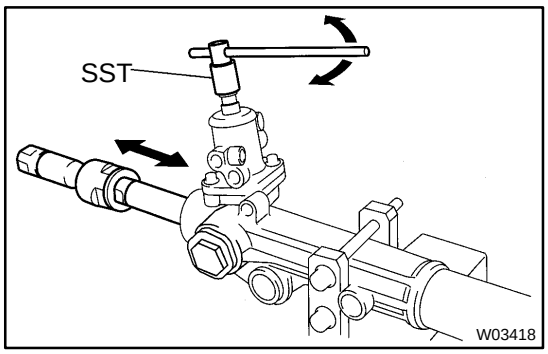

(d) Using SST, turn the control valve shaft right and left 1 or 2 times.
SST 09616–00011

(e) Loosen the cap until the rack guide spring is not functioning.

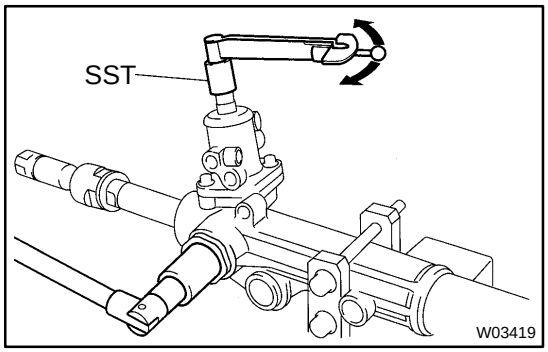

(f) Using SST and a torque wrench, tighten the cap until the preload is within specification.
SST 09616–00011
Preload (turning):
0.5 – 1.7 N·m (4.7 – 17.2 kgf·cm, 4.1 – 14.9 in.·lbf)

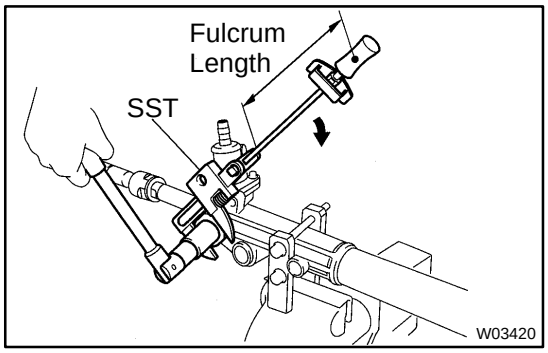

12. INSTALL RACK GUIDE SPRING CAP LOCK NUT

(a) Apply sealant to 2 or 3 threads of the rack guide spring cap lock nut.
Sealant:
Part No.08833–00080, THREE BOND 1344,
LOCTITE 242 or equivalent

(b) Holding the rack guide spring cap rotating, and using SST, install the lock nut.
SST 09922–10010
Torque: 51 N·m (521 kgf·cm, 38 ft·lbf)

NOTICE:
Use SST 09922–10010 in the direction shown in the illustration.

HINT:
Use a torque wrench with a fulcrum length of 345 mm (13.58 in.).

(c) Recheck the total preload.
Preload (turning):
0.5 – 1.7 N·m (4.7 – 17.2 kgf·cm, 4.1 – 14.9 in.·lbf)

(d) Remove the RH and LH rack ends.

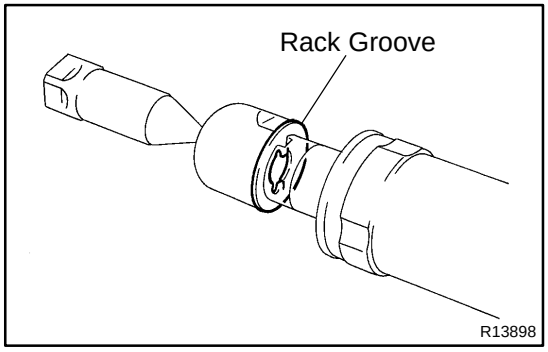

13. INSTALL RH AND LH CLAW WASHERS AND RACK ENDS

(a) Install a new claw washer, and temporarily install the rack end.

HINT:
Align the claws of the claw washer with the steering rack grooves.

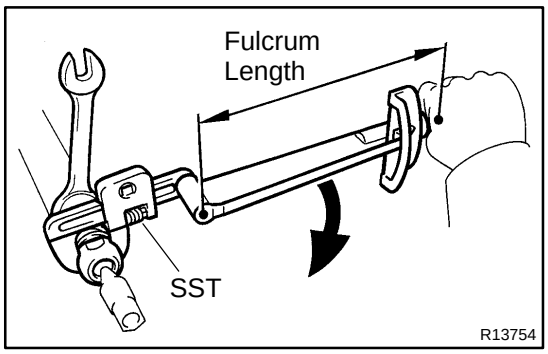

(b) Using a spanner to hold the steering rack steady, and using SST, torque the rack end.
SST 09922–10010
Torque: 76 N·m (770 kgf·cm, 56 ft·lbf)

NOTICE:
Use SST 09922–10010 in the direction shown in the illustration.

HINT:
Use a torque wrench with a fulcrum length of 345 mm (13.58 in.).

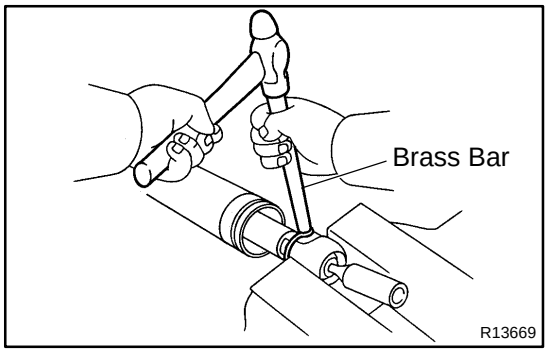

(c) Using a brass bar and hammer, stake the claw washer.

NOTICE:
Avoid any impact to the rack.

(d) Employ the same manner described above to the other side.

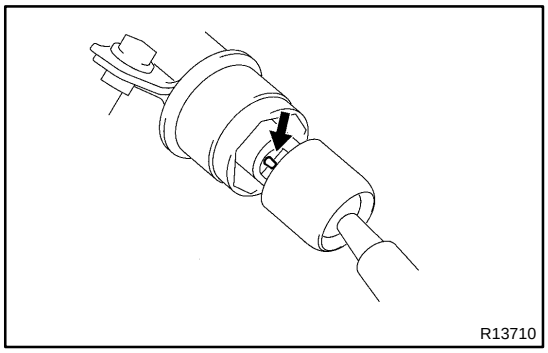

14. INSTALL RH AND LH RACK BOOTS, CLAMPS AND CLIPS

(a) Ensure that the steering rack hole is not clogged with grease.

HINT:
If the steering rack hole is clogged, the pressure inside the boot will change after it is assembled and the steering wheel is turned.

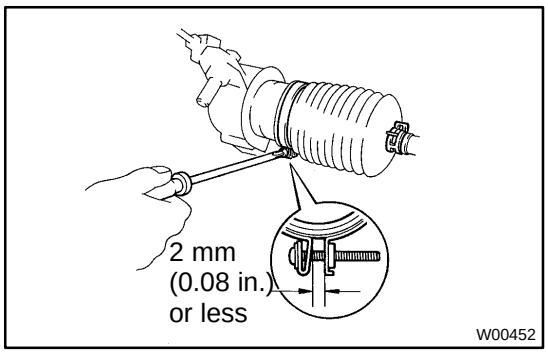

(b) Install the rack boot, dip and a new damp.

NOTICE:
Be careful not to damage or twist the boot.

(c) Tighten a new clamp with the screw, as shown in the illustration.

15. INSTALL RH AND LH TIE ROD ENDS AND LOCK NUTS

(a) Screw the lock nut and tie rod end onto the rack end until the matchmarks are aligned.

(b) After adjusting toe–in, torque the nut (See page SA–10).
Torque: 55 N·m (560 kgf·cm, 41 ft·lbf)

16. INSTALL 2 TURN PRESSURE TUBES

(a) Install 2 new union seats to the rack housing.

(b) Install 2 new union seats to the control valve housing.

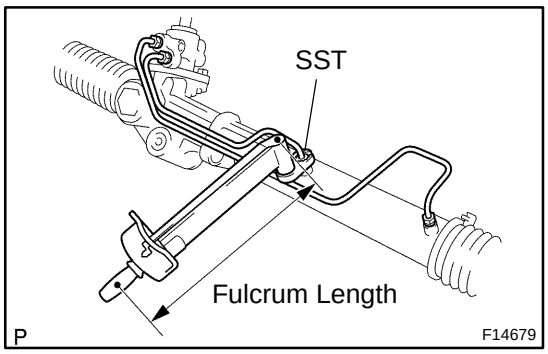

(c) Using SST, install the 2 turn pressure tubes.
SST 09023–38200
Torque: 23 N·m (235 kgf·cm, 17 ft·lbf)

HINT:

- Use a torque wrench with a fulcrum length of 300 mm (11.81 in.).
- This torque value is effective in case that SST is parallel to a torque wrench.

SR05G–04

REMOVAL

NOTICE:

Remove the steering wheel assembly before the steering gear removal, because there is possibility of breaking of the spiral cable.

1. **PLACE FRONT WHEELS FACING STRAIGHT AHEAD**
2. **REMOVE STEERING WHEEL PAD (See page SR–14)**
3. **REMOVE STEERING WHEEL (See page SR–14)**
4. **REMOVE ENGINE UNDER COVER**

Remove the 4 bolts and engine under cover.

5. **DISCONNECT RH AND LH TIE ROD ENDS (See page SA–115)**
6. **DISCONNECT INTERMEDIATE NO. 2 SHAFT (See page SR–14)**

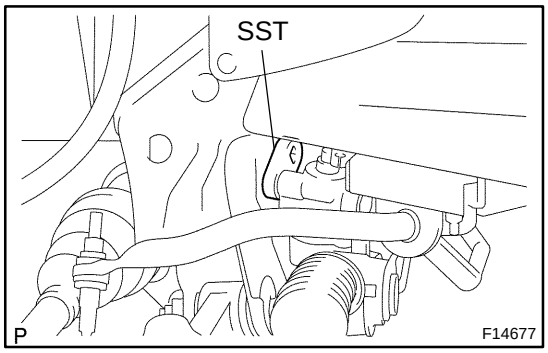

7. **DISCONNECT PRESSURE FEED AND RETURN TUBES**

Using SST, disconnect the pressure feed and return tubes.

SST 09023–12700

8. **REMOVE PS GEAR ASSEMBLY**

(a) Remove the bolt and nut from the bracket.

(b) Remove the 2 set bolts and nut.

(c) Remove the PS gear assembly.

9. **REMOVE BRACKET AND GROMMET**

POWER STEERING VANE PUMP (2RZ–FE, 3RZ–FE)

SR04R–03

COMPONENTS

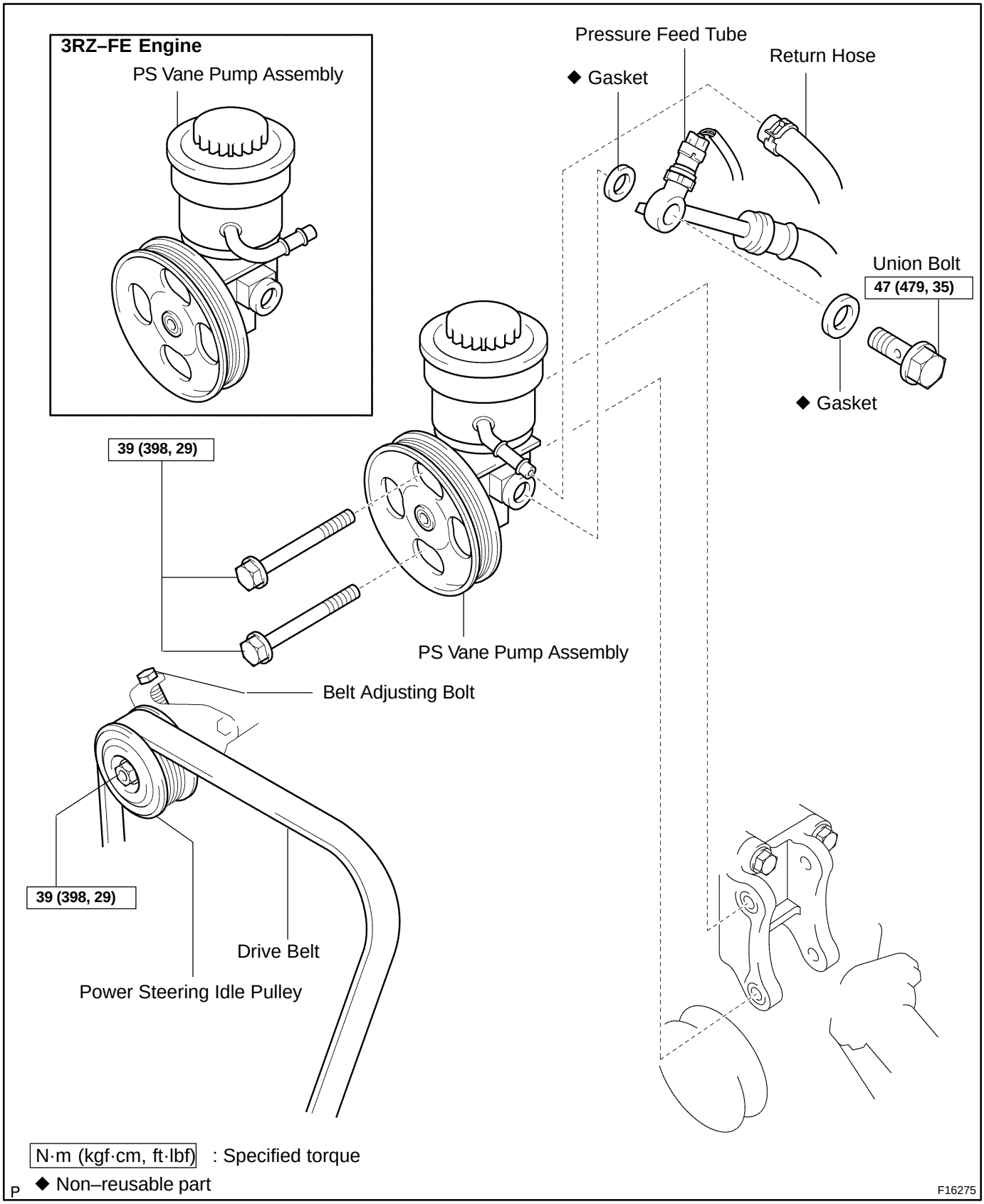

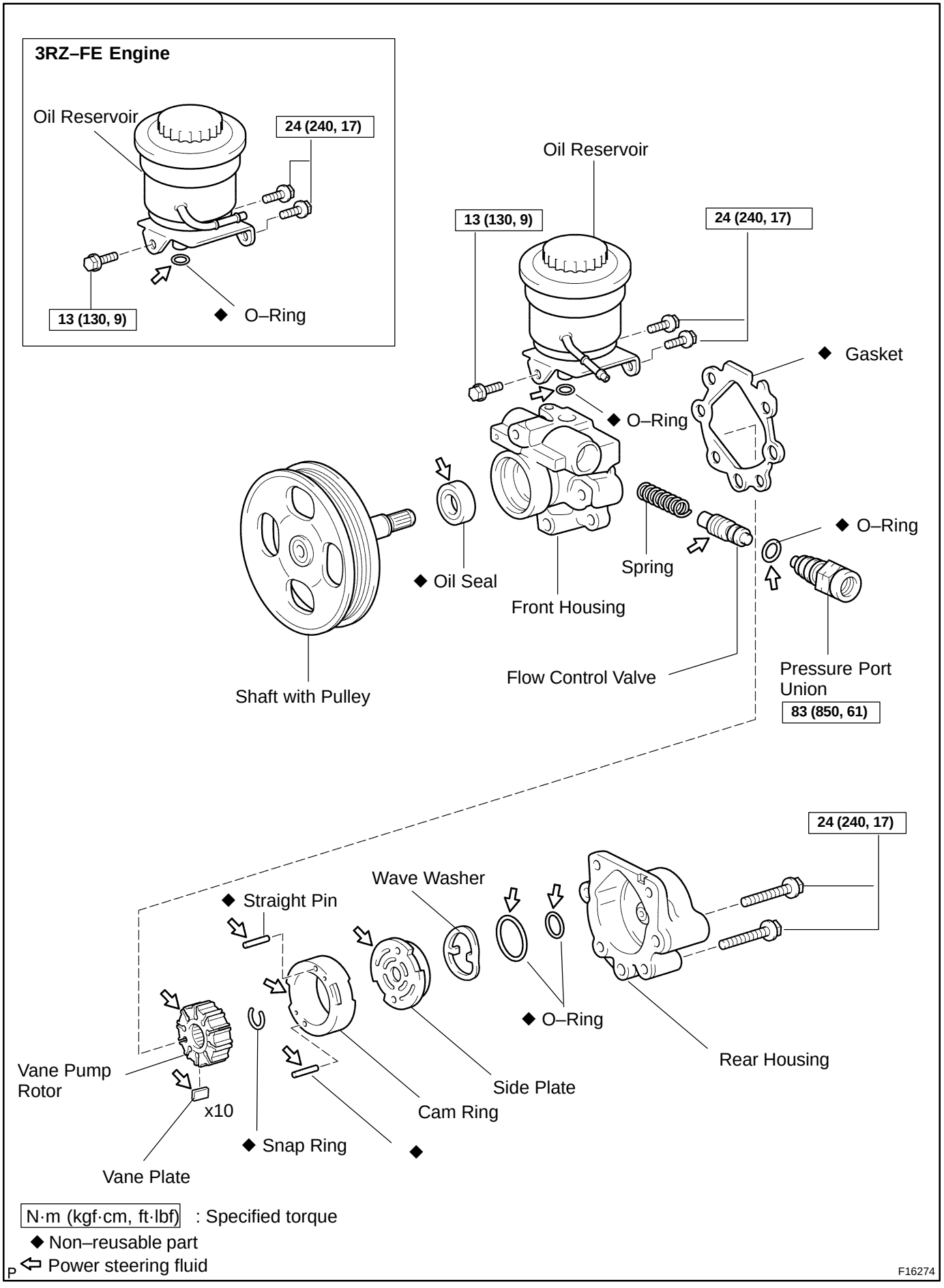
3RZ–FE Engine
Oil Reservoir
24 (240, 17)
13 (130, 9)
◆ O–Ring
Oil Reservoir
13 (130, 9)
24 (240, 17)
◆ Gasket
◆ O–Ring
◆ Oil Seal
Front Housing
Spring
◆ O–Ring
Shaft with Pulley
Flow Control Valve
Pressure Port Union
83 (850, 61)
24 (240, 17)
Wave Washer
◆ Straight Pin
◆ O–Ring
Rear Housing
Vane Pump Rotor
x10
Side Plate
Cam Ring
◆ Snap Ring
Vane Plate
N·m (kgf·cm, ft·lbf) : Specified torque
◆ Non–reusable part
P ⇦ Power steering fluid
F16274

SR1HV–01

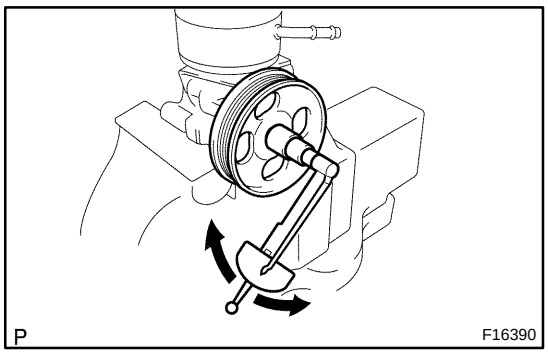

DISASSEMBLY

NOTICE:

When using a vise, do not overtighten it.

1. MEASURE PS VANE PUMP ROTATING TORQUE

(a) Check that the pump rotates smoothly without abnormal noise.

(b) Using a torque wrench, check the pump rotating torque.

Rotating torque:

0.28 N·m (2.8 kgf·cm, 2.4 in.·lbf) or less

2. REMOVE OIL RESERVOIR

(a) Remove the 3 bolts and oil reservoir.

(b) Remove the O–ring from the oil reservoir.

3. REMOVE PRESSURE PORT UNION, FLOW CONTROL VALVE AND SPRING

(a) Remove the pressure port union, flow control valve and spring.

(b) Remove the O–ring from the union.

4. REMOVE REAR HOUSING

(a) Remove the 2 bolts and rear housing.

HINT:

If the wave washer and side plate are stuck to the rear housing, lightly tap the rear housing with a plastic hammer, and remove the wave washer and side plate.

(b) Remove the 2 O–rings from the housing.

5. REMOVE WAVE WASHER

6. REMOVE SIDE PLATE

7. REMOVE GASKET

8. REMOVE CAM RING, VANE PLATES AND VANE PUMP ROTOR

(a) Using a screwdriver, remove the snap ring from the vane pump shaft.

(b) Remove the cam ring, 10 vane plates and vane pump rotor.

NOTICE:

Take care not to drop the plate.

9. REMOVE VANE PUMP SHAFT WITH VANE PUMP PULLEY

10. REMOVE STRAIGHT PINS

Remove the 2 straight pins from the front housing.

SR1HW–01

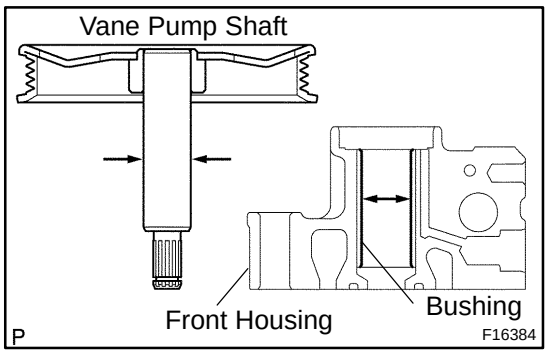

INSPECTION

NOTICE:

When using a vise, do not overtighten it.

1. CHECK OIL CLEARANCE BETWEEN VANE PUMP SHAFT AND BUSHING

Using a micrometer and caliper gauge, measure the oil clearance.

Standard clearance:
0.03 – 0.05 mm (0.0012 – 0.0020 in.)
Maximum clearance: 0.07 mm (0.0028 in.)

If it is more than the maximum, replace the front housing and vane pump shaft.

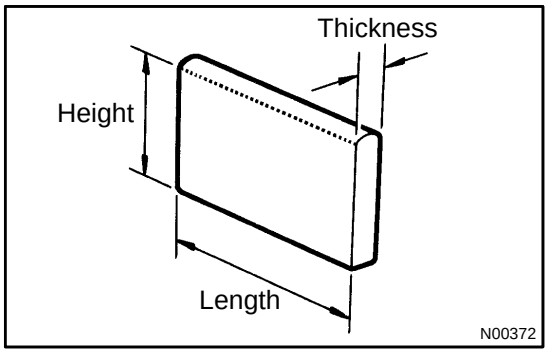

2. INSPECT VANE PUMP ROTOR AND VANE PLATES

(a) Using a micrometer, measure the height, thickness and length of the 10 plates.

Minimum height: 8.6 mm (0.339 in.)
Minimum thickness: 1.397 mm (0.0550 in.)
Minimum length: 14.991 mm (0.5902 in.)

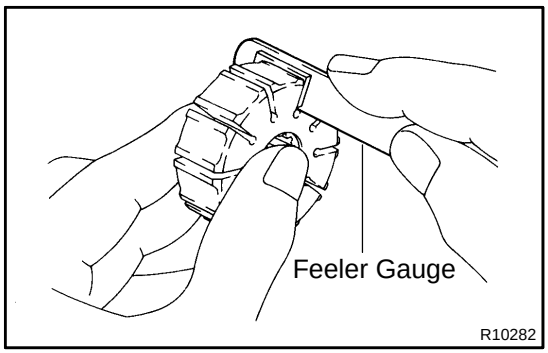

(b) Using a feeler gauge, measure the clearance between the rotor groove and plate.

Maximum clearance: 0.035 mm (0.0014 in.)

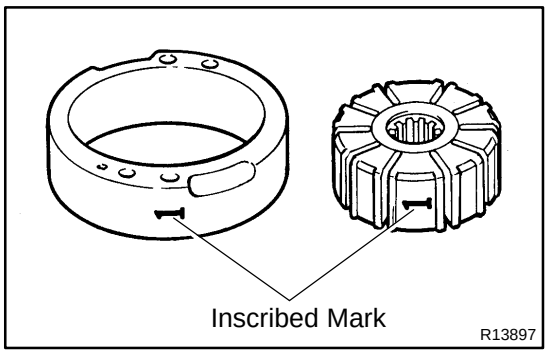

If it is more than the maximum, replace the plate and/or rotor with one having the same mark stamped on the cam ring.

Inscribed mark: 1, 2, 3, 4 or None

HINT:

There are 5 vane plate lengths with the following rotor and cam ring marks:

Rotor and cam ring mark	Vane plate part number	Vane plate length mm (in.)
None	44345–04010	14.999–15.001 (0.59051–0.59059)
1	44345–04020	14.997–14.999 (0.59043–0.59051)
2	44345–04030	14.995–14.997 (0.59035–0.59043)
3	44345–04040	14.993–14.995 (0.59027–0.59035)
4	44345–04050	14.991–14.993 (0.59020–0.59027)

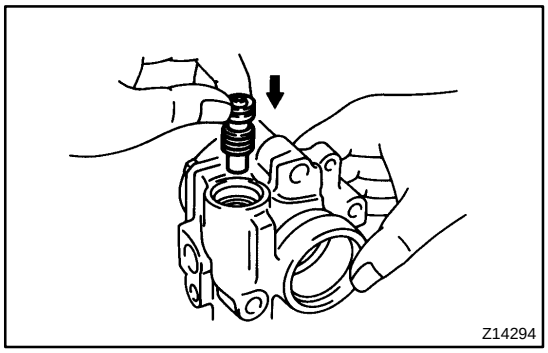

3. INSPECT FLOW CONTROL VALVE

(a) Coat the valve with power steering fluid and check that it falls smoothly into the valve hole by its own weight.

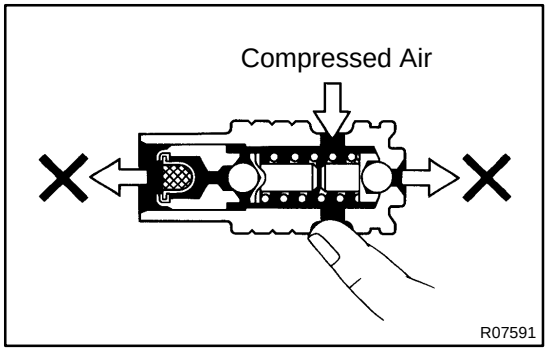

(b) Check the flow control valve for leakage.

Close one of the holes and apply compressed air 392–490 kPa (4–5 kgf/cm^2, 57–71 psi) into the opposite side, and confirm that air does not come out from the end holes.

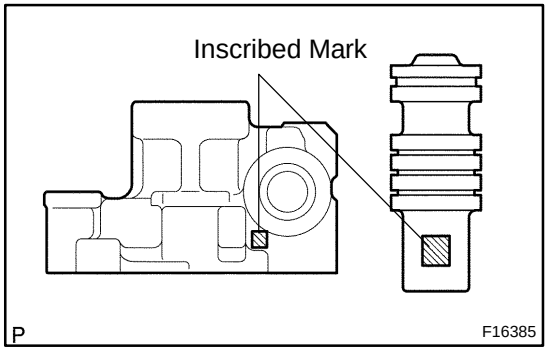

If necessary, replace the valve with one having the same letter as inscribed on the front housing.

NOTICE:

Install a new valve with the same inscribed mark as the old one.

Inscribed mark: A, B, C, D, E or F

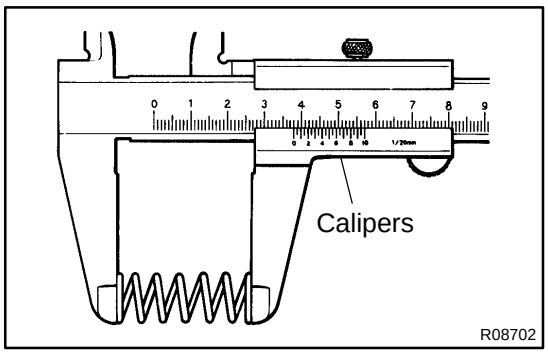

4. INSPECT SPRING

Using vernier calipers, measure the free length of the spring.

Minimum free length: 33.2 mm (1.307 in.)

If it is not within specification, replace the spring.

SR1HZ–01

INSTALLATION

1. INSTALL PS VANE PUMP ASSEMBLY

Install the PS vane pump assembly with the 2 bolts.

Torque: 39 N·m (398 kgf·cm, 29 ft·lbf)

2. CONNECT RETURN HOSE

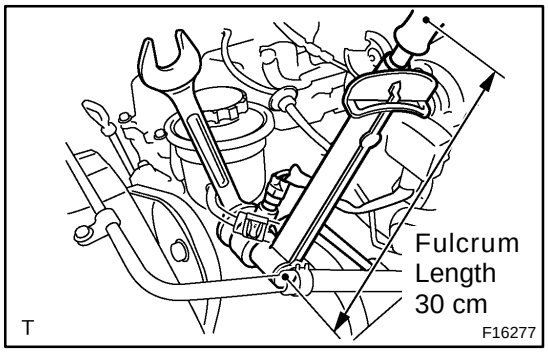

3. INSTALL PRESSURE FEED TUBE

Install the union bolt with a new gasket on each side of the tube.

Torque: 47 N·m (479 kgf·cm, 35 ft·lbf)

HINT:

- Use a torque wrench with a fulcrum length of 30 cm (11.81in.).

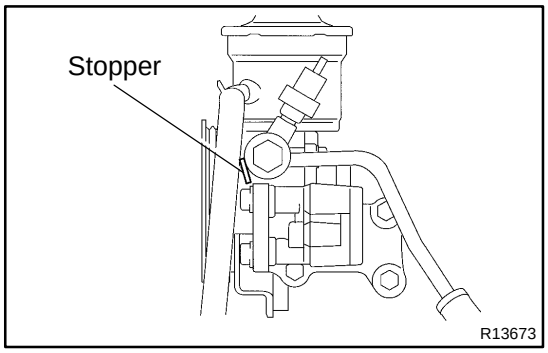

- Make sure the stopper of the tube is touching the PS pump body as shown, then torque the union bolt.

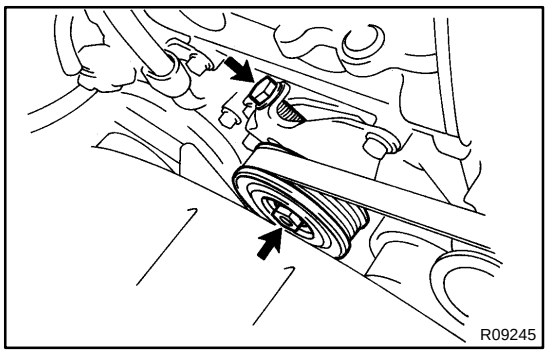

4. INSTALL DRIVE BELT

(a) Tightening the belt adjusting bolt and adjust drive belt tension (See page SR–3).

(b) Torque the power steering idle pulley set nut.

Torque: 39 N·m (398 kgf·cm, 29 ft·lbf)

5. BLEED POWER STEERING SYSTEM (See page SR–4)

SR1HY–01

REASSEMBLY

NOTICE:

When using a vise, do not overtighten it.

1. COAT PARTS INDICATED BY ARROWS WITH POWER STEERING FLUID (See page SR–32).

2. INSTALL VANE PUMP SHAFT WITH VANE PUMP PULLEY

3. INSTALL STRAIGHT PINS

Using a plastic hammer, tap in 2 new pins to the front housing.

NOTICE:

Be careful not to damage the pins.

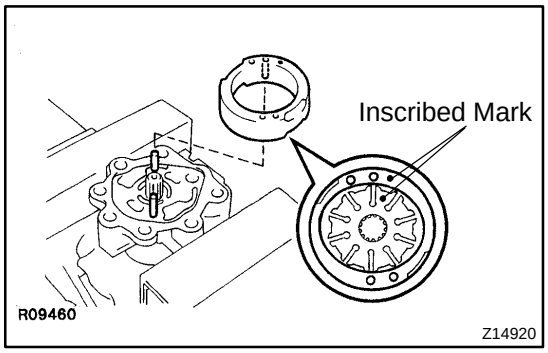

4. INSTALL CAM RING

Install the cam ring with the inscribed mark facing outward.

HINT:

Align the holes of the cam ring with the straight pins.

5. INSTALL VANE PUMP ROTOR

(a) Install the rotor with the inscribed mark facing outward.

(b) Install a new snap ring to the vane pump shaft.

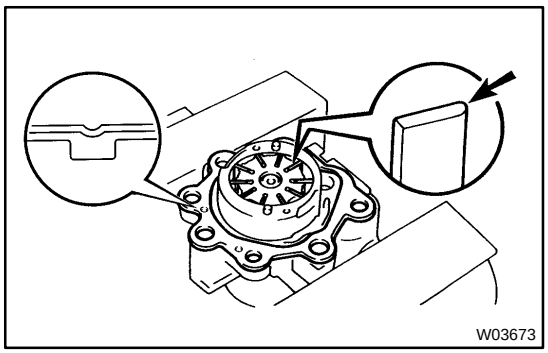

6. INSTALL VANE PLATES AND GASKET

(a) Install the 10 plates with the round end facing outward.

(b) Install a new gasket on the front housing.

NOTICE:

Be careful the direction of the gasket.

7. INSTALL SIDE PLATE

Align the holes of the plate and 2 straight pins.

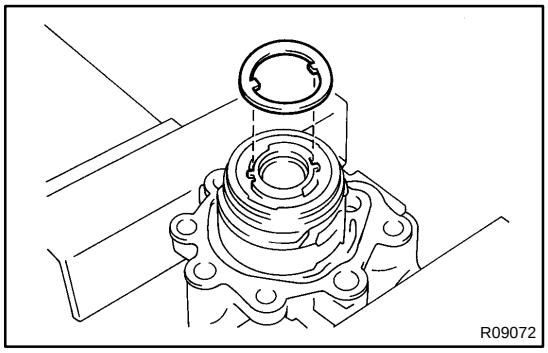

8. INSTALL WAVE WASHER

Install the washer so that its protrusions fit into the slots in the side plate.

9. INSTALL REAR HOUSING

(a) Coat 2 new O–rings with power steering fluid and install them to the rear housing.

(b) Install the rear housing with the 2 bolts.

Torque: 24 N·m (240 kgf·cm, 17 ft·lbf)

10. INSTALL SPRING, FLOW CONTROL VALVE AND PRESSURE PORT UNION

(a) Install the spring to the front housing.

(b) Install the flow control valve facing the correct direction (See page SR–32).

(c) Coat a new O–ring with power steering fluid and install it to the pressure port union.

(d) Install the pressure port union.

Torque: 83 N·m (850 kgf·cm, 61 ft·lbf)

11. INSTALL OIL RESERVOIR

(a) Coat a new O–ring with power steering fluid and install it to the oil reservoir.

(b) Install the oil reservoir with the 3 bolts.

Torque:
Front side bolt: 13 N·m (130 kgf·cm, 9 ft·lbf)
Rear side bolts: 24 N·m (240 kgf·cm, 17 ft·lbf)

12. MEASURE PS VANE PUMP ROTATING TORQUE (See page SR–34)

SR04S–02

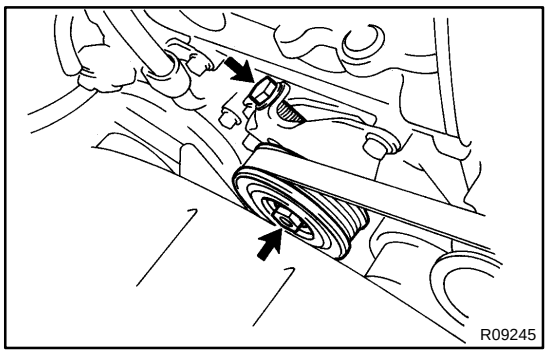

REMOVAL

1. REMOVE DRIVE BELT

(a) Loosen the power steering idle pulley set bolt.

(b) Loosen the belt adjusting bolt.

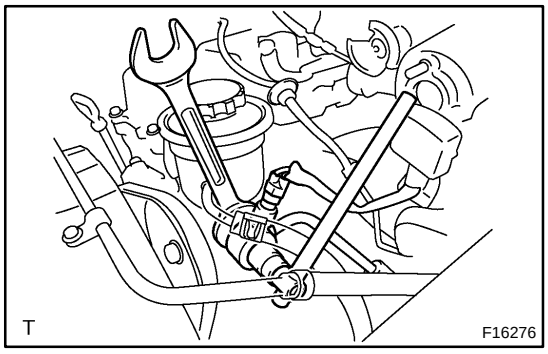

2. DISCONNECT PRESSURE FEED TUBE

Using a spanner (24 mm) to hold the pressure port union, remove the union bolt and 2 gaskets.

3. DISCONNECT RETURN HOSE

NOTICE:

Take care not to spill fluid on the drive belt.

4. REMOVE PS VANE PUMP ASSEMBLY

Remove the 2 pump assembly set bolts.

SR1HX–01

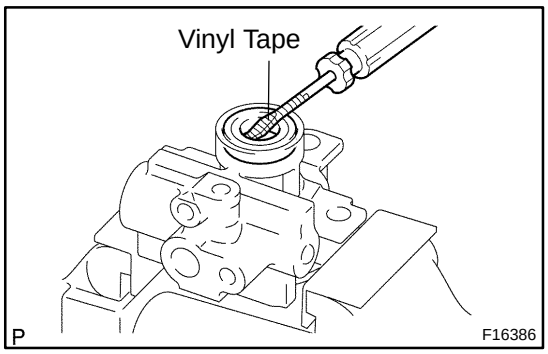

REPLACEMENT

NOTICE:

When using a vise, do not overtighten it.

REPLACE OIL SEAL

(a) Using a screwdriver with vinyl tape wound around its tip, remove the oil seal.

NOTICE:

Be careful not to damage the front housing.

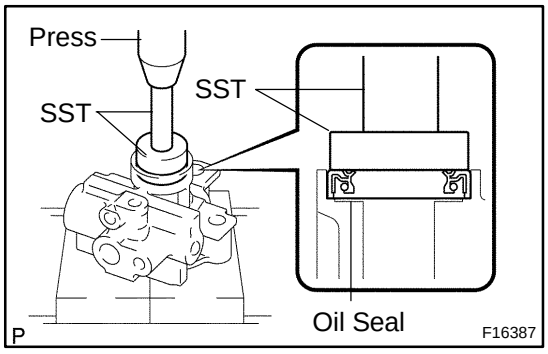

(b) Coat a new oil seal lip with power steering fluid.

(c) Using SST, press in the oil seal.

SST 09950–60010 (09951–00330),
09950–70010 (09951–07100)

NOTICE:

Make sure to install the oil seal facing in the correct direction.

POWER STEERING VANE PUMP (5VZ–FE)

SR04X–03

COMPONENTS

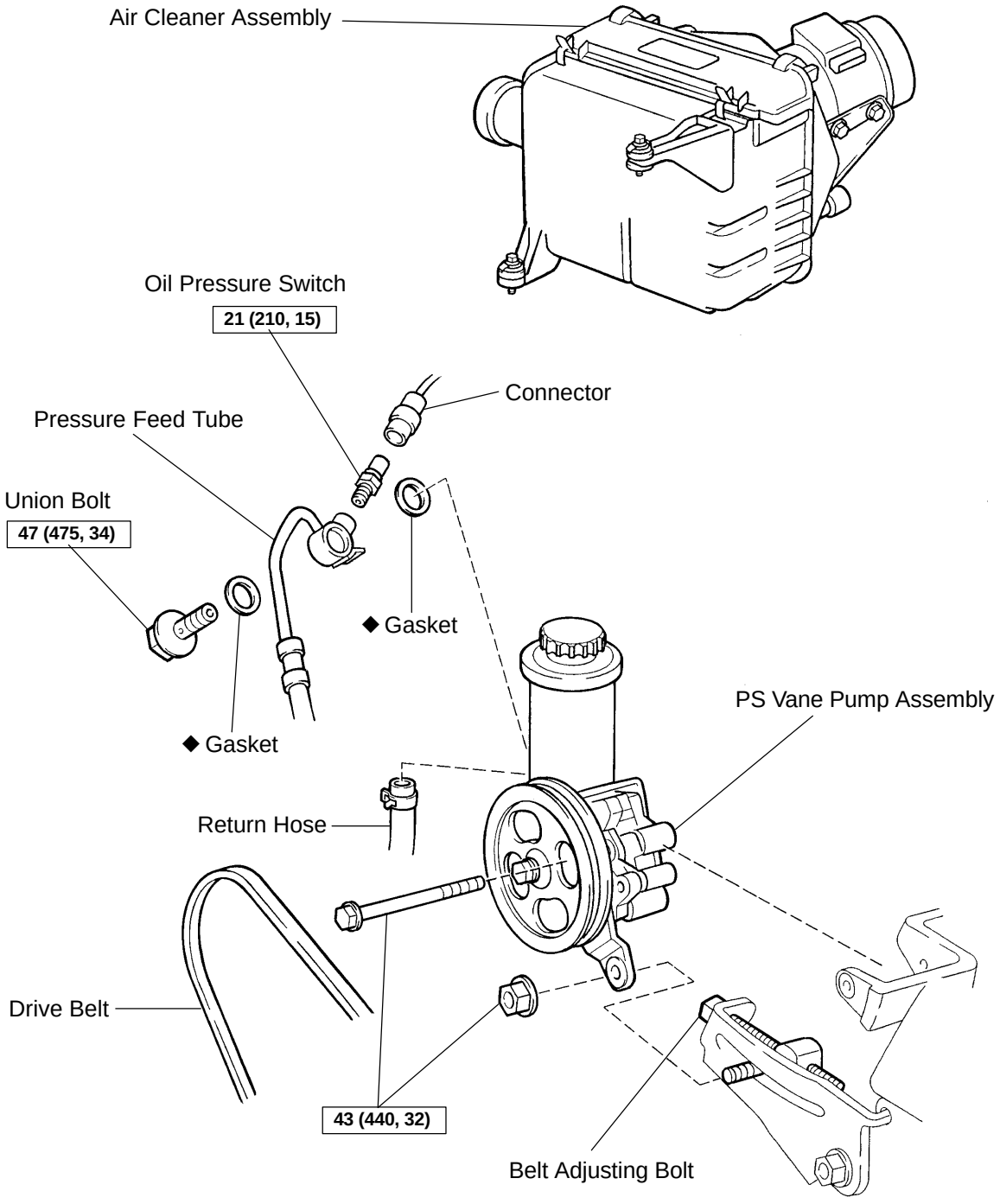

N·m (kgf·cm, ft·lbf) : Specified torque

◆ Non–reusable part

F01853

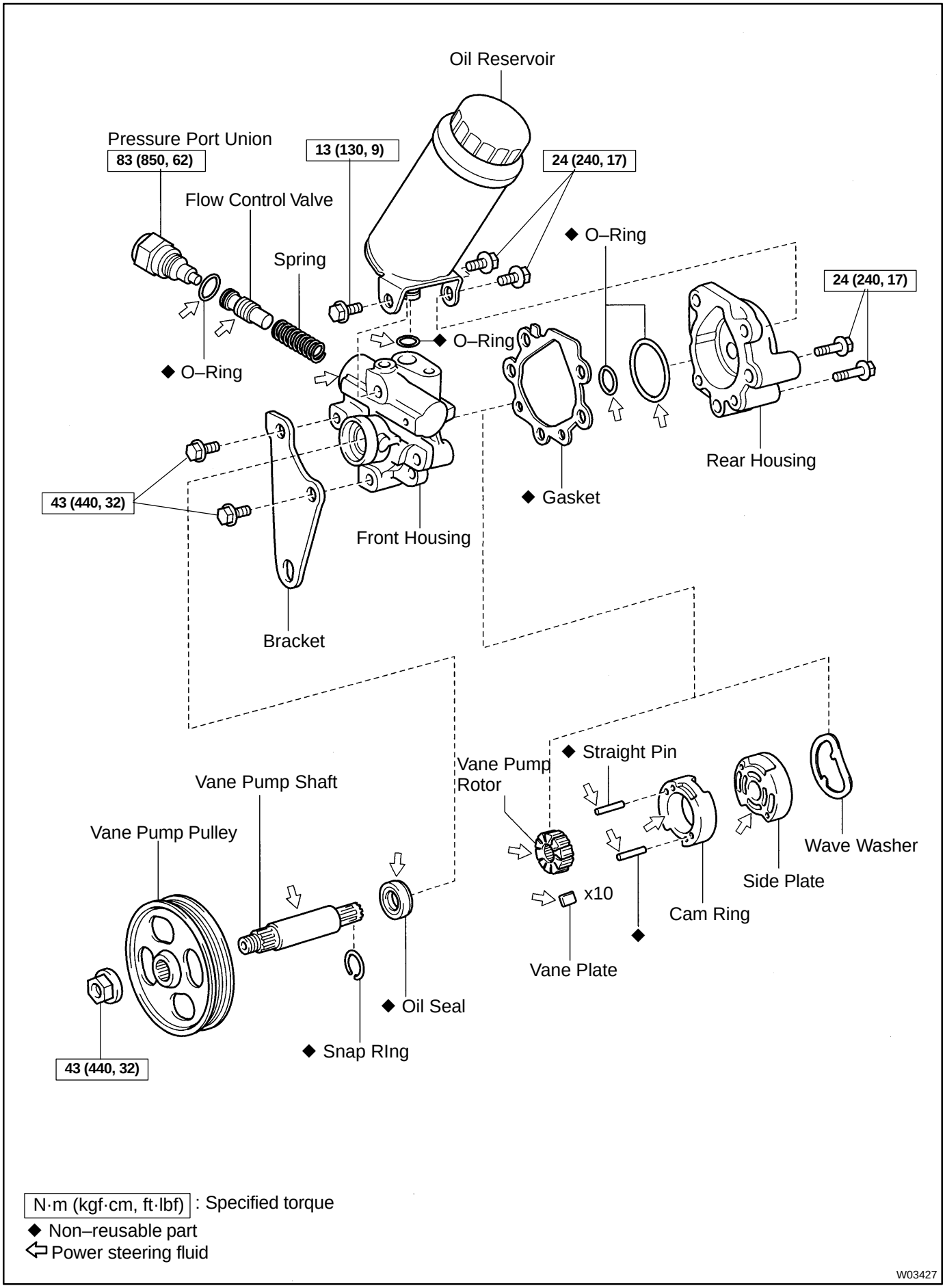
Oil Reservoir
Pressure Port Union
83 (850, 62)
13 (130, 9)
24 (240, 17)
Flow Control Valve
Spring
◆ O–Ring
◆ O–Ring
◆ O–Ring
24 (240, 17)
Rear Housing
◆ Gasket
43 (440, 32)
Front Housing
Bracket
◆ Straight Pin
Vane Pump Rotor
Vane Pump Shaft
Vane Pump Pulley
Wave Washer
Side Plate
x10
Cam Ring
◆
Vane Plate
◆ Oil Seal
◆ Snap RIng
43 (440, 32)
N·m (kgf·cm, ft·lbf) : Specified torque
◆ Non–reusable part
⇦ Power steering fluid
W03427

SR04Z–02

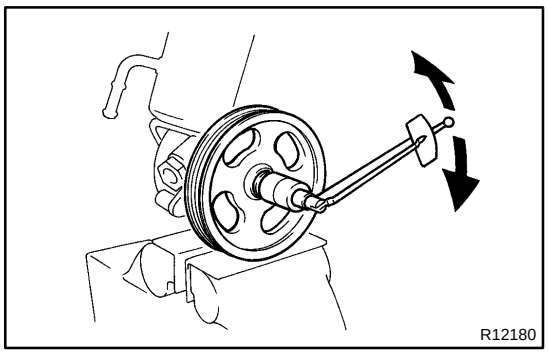

DISASSEMBLY

NOTICE:

When using a vise, do not overtighten it.

1. MEASURE PS VANE PUMP ROTATING TORQUE

(a) Check that the pump rotates smoothly without abnormal noise.

(b) Using a torque wrench, check the pump rotating torque.

Rotating torque:

0.27 N·m (2.8 kgf·cm, 2.4 in.·lbf) or less

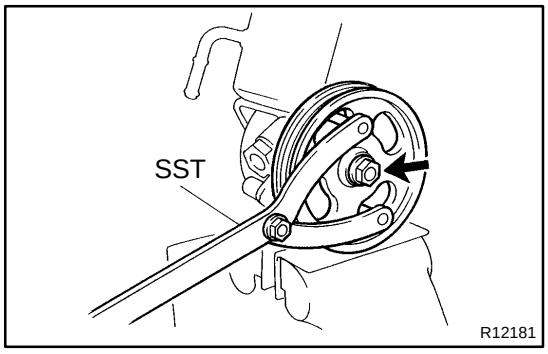

2. REMOVE VANE PUMP PULLEY

Using SST to stop the pulley rotating, remove the pulley set nut.

SST 09960–10010 (09962–01000, 09963–01000)

3. REMOVE OIL RESERVOIR

(a) Remove the 3 bolts and oil reservoir.

(b) Remove the O–ring from the oil reservoir.

4. REMOVE PRESSURE PORT UNION, FLOW CONTROL VALVE AND SPRING

(a) Remove the pressure port union, flow control valve and spring.

(b) Remove the O–ring from the union.

5. REMOVE BRACKET

Remove the 2 bolts and bracket.

6. REMOVE REAR HOUSING

(a) Remove the 2 bolts.

(b) Remove the 2 O–rings from the rear housing.

7. REMOVE WAVE WASHER

8. REMOVE SIDE PLATE

9. REMOVE GASKET

10. REMOVE CAM RING, VANE PLATES AND VANE PUMP ROTOR

(a) Remove the cam ring and 10 plates.

NOTICE:

Take care not to drop the plate.

(b) Using a screwdriver, remove the snap ring from the vane pump shaft.

(c) Remove the vane pump rotor.

11. REMOVE VANE PUMP SHAFT

12. REMOVE STRAIGHT PINS

Remove the 2 pins from the front housing.

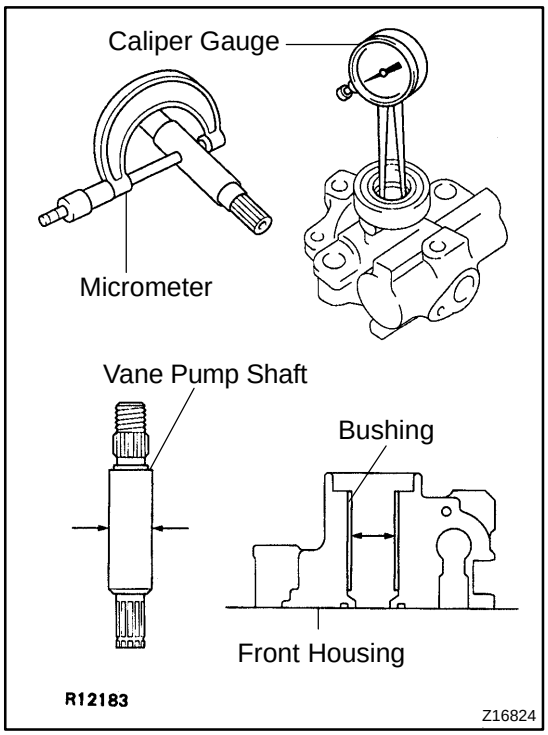

INSPECTION

NOTICE:

When using a vise, do not overtighten it.

1. CHECK OIL CLEARANCE BETWEEN VANE PUMP SHAFT AND BUSHING

Using a micrometer and caliper gauge, measure the oil clearance.

Standard clearance:
0.03 – 0.05 mm (0.0012 – 0.0020 in.)
Maximum clearance: 0.07 mm (0.0028 in.)

If it is more than the maximum, replace the front housing and vane pump shaft.

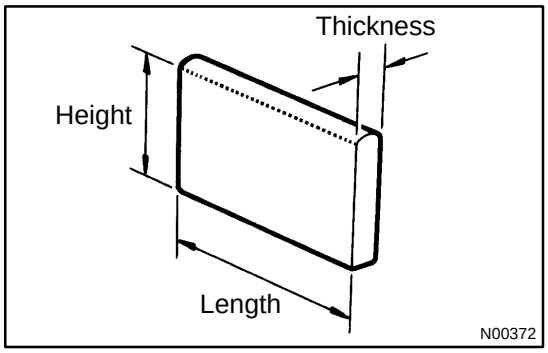

2. INSPECT VANE PUMP ROTOR AND VANE PLATES

(a) Using a micrometer, measure the height, thickness and length of the 10 plates.

Minimum height: 8.6 mm (0.339 in.)
Minimum thickness: 1.397 mm (0.0550 in.)
Minimum length: 14.991 mm (0.5902 in.)

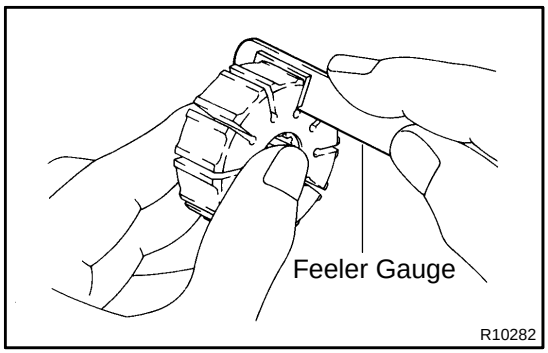

(b) Using a feeler gauge, measure the clearance between the rotor groove and plate.

Maximum clearance: 0.035 mm (0.0014 in.)

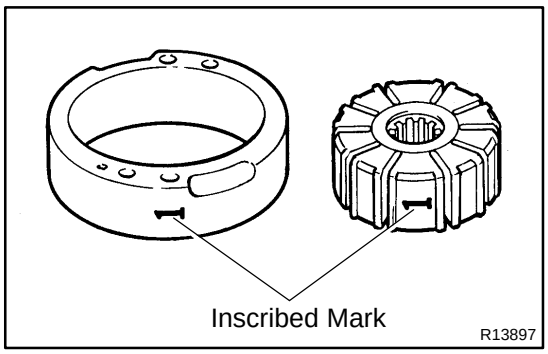

If it is more than the maximum, replace the plate and/or rotor with one having the same mark stamped on the cam ring.

Inscribed mark: 1, 2, 3, 4 or None

HINT:

There are 5 vane plate lengths with the following rotor and cam ring marks:

Rotor and cam ring mark	Vane plate part number	Vane plate length mm (in.)
None	44345–26010	14.999–15.001 (0.59051–0.59059)
1	44345–26020	14.997–14.999 (0.59043–0.59051)
2	44345–26030	14.995–14.997 (0.59035–0.59043)
3	44345–26040	14.993–14.995 (0.59027–0.59035)
4	44345–26050	14.991–14.993 (0.59020–0.59027)

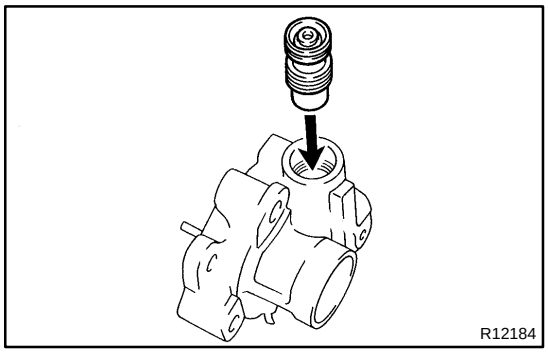

3. INSPECT FLOW CONTROL VALVE

(a) Coat the valve with power steering fluid and check that it falls smoothly into the valve hole by its own weight.

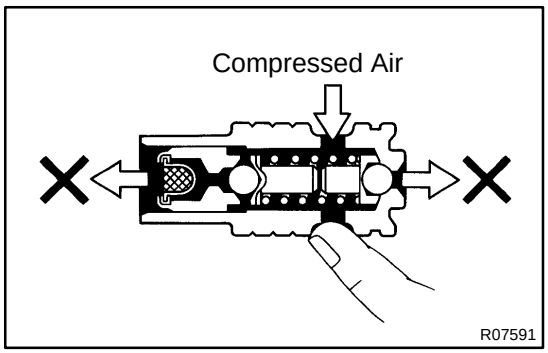

(b) Check the flow control valve for leakage.
Close one of the holes and apply compressed air 392–490 kPa (4–5 kgf/cm^2, 57–71 psi) into the opposite side, and confirm that air does not come out from the end holes.

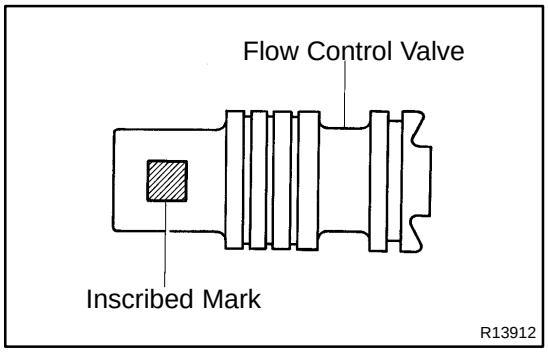

If necessary, replace the valve.

NOTICE:

Install a new valve with the same inscribed mark as the old one.

Inscribed mark: A, B, C, D, E or F

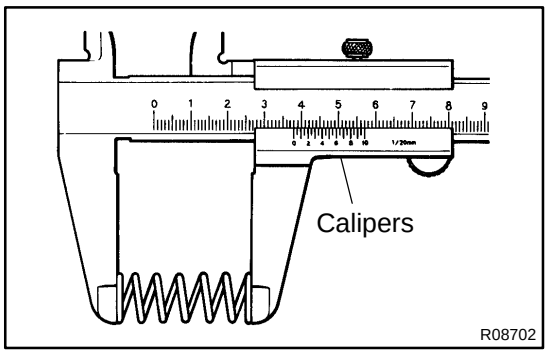

4. INSPECT SPRING

Using vernier calipers, measure the free length of the spring.

Minimum free length: 33.2 mm (1.307 in.)

If it is not within specification, replace the spring.

SR052–03

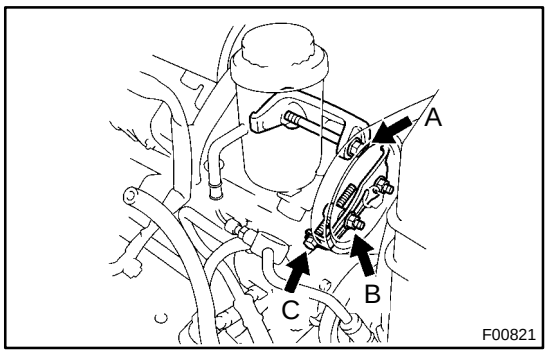

INSTALLATION

1. INSTALL PS VANE PUMP ASSEMBLY

Temporarily tighten the bolt A and nut B.

2. INSTALL DRIVE BELT

(a) Tightening the bolt C, adjust drive belt tension (See page SR–3).

(b) Torque the bolt A and nut B.

Torque: 43 N·m (440 kgf·cm, 32 ft·lbf)

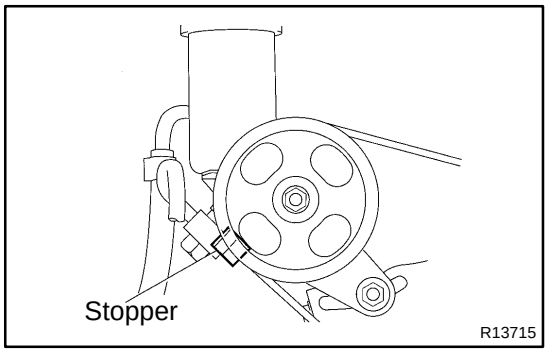

3. CONNECT PRESSURE FEED TUBE

(a) Install the union bolt with a new gasket on each side of the tube.

Torque: 47 N·m (475 kgf·cm, 34 ft·lbf)

HINT:

Make sure the stopper of the tube is touching the PS pump body as shown, then torque the union bolt.

(b) Install the oil pressure switch to the pressure feed tube.

Torque: 21 N·m (210 kgf·cm, 15 ft·lbf)

(c) Connect the connector to the oil pressure switch.

4. CONNECT RETURN HOSE

5. INSTALL AIR CLEANER ASSEMBLY

Install the air cleaner assenbly with the 3 bolts.

6. BLEED POWER STEERING SYSTEM (See page SR–4)

SR051–02

REASSEMBLY

NOTICE:

When using a vise, do not overtighten it.

1. COAT PARTS INDICATED BY ARROWS WITH POWER STEERING FLUID (See page SR–43)

2. INSTALL STRAIGHT PINS

Using a plastic hammer, tap in 2 new straight pins to the front housing.

NOTICE:

Be careful not to damage the pins.

3. INSTALL VANE PUMP SHAFT

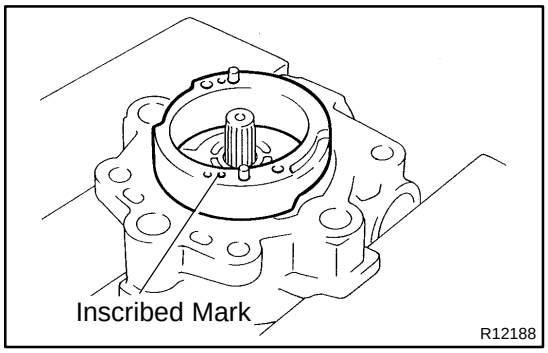

4. INSTALL CAM RING

Install the cam ring with the inscribed mark facing outward.

HINT:

Align the holes of the cam ring with the straight pins.

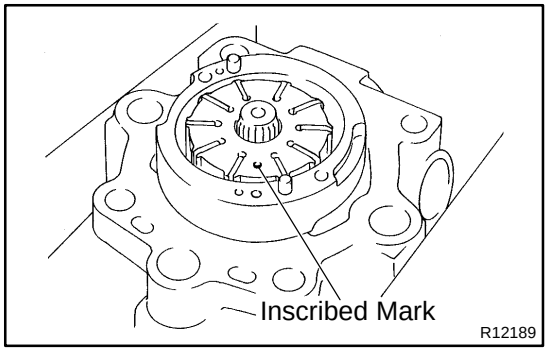

5. INSTALL VANE PUMP ROTOR

(a) Install the rotor with the inscribed mark facing outward.

(b) Install a new snap ring to the vane pump shaft.

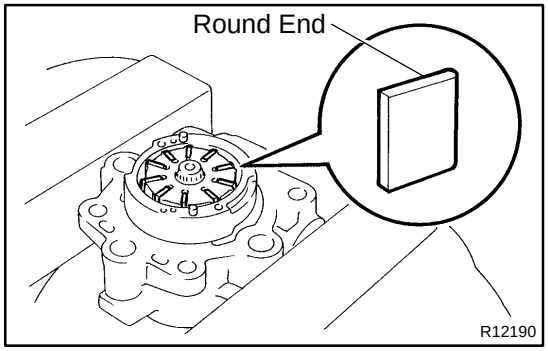

6. INSTALL VANE PLATES

Install the 10 plates with the round end facing outward.

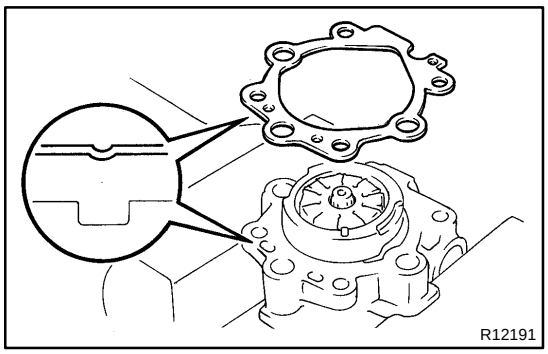

7. INSTALL GASKET

Install a new gasket on the front housing.

NOTICE:

Be careful the direction of the gasket.

8. INSTALL SIDE PLATE

Align the holes of the plate and 2 straight pins.

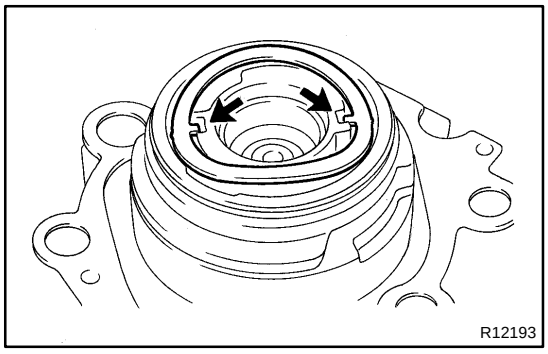

9. INSTALL WAVE WASHER

Install the washer so that its protrusions fit into the slots in the side plate.

10. INSTALL REAR HOUSING

(a) Coat 2 new O–rings with power steering fluid and install them to the rear housing.

(b) Install the rear housing with the 2 bolts.

Torque: 24 N·m (240 kgf·cm, 17 ft·lbf)

11. INSTALL SPRING, FLOW CONTROL VALVE AND PRESSURE PORT UNION

(a) Install the spring.

(b) Install the flow control valve facing the correct direction (See page SR–43).

(c) Coat a new O–ring with power steering fluid and install it to the pressure port union .

(d) Install the union.

Torque: 83 N·m (850 kgf·cm, 62 ft·lbf)

12. INSTALL BRACKET

Install the bracket with the 2 bolts.

Torque: 43 N·m (440 kgf·cm, 32 ft·lbf)

13. INSTALL OIL RESERVOIR

(a) Coat a new O–ring with power steering fluid and install it to the oil reservoir.

(b) Install the oil reservoir with the 3 bolts.

Torque:

Front side bolt: 13 N·m (130 kgf·cm, 9 ft·lbf)

Rear side bolts: 24 N·m (240 kgf·cm, 17 ft·lbf)

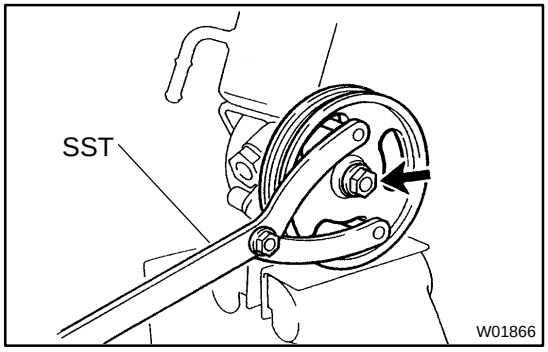

14. INSTALL VANE PUMP PULLEY

Using SST to stop the pulley rotating, torque the nut.

SST 09960–10010 (09962–01000, 09963–01000)

Torque: 43 N·m (440 kgf·cm, 32 ft·lbf)

15. MEASURE PS VANE PUMP ROTATING TORQUE (See page SR–45)

SR04Y–01

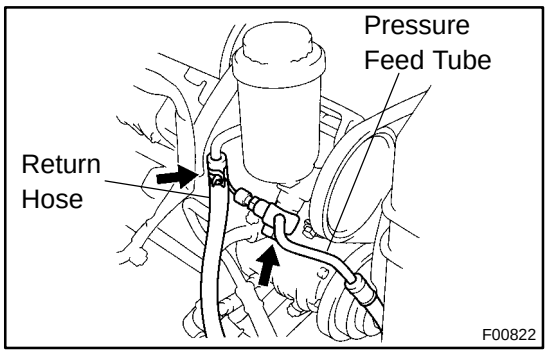

REMOVAL

1. REMOVE AIR CLEANER ASSEMBLY

Loosen the 3 bolts.

2. DISCONNECT RETURN HOSE

NOTICE:

Take care not to spill fluid on the drive belt.

3. DISCONNECT PRESSURE FEED TUBE

(a) Disconnect the connector from the oil pressure switch.

(b) Remove the oil pressure switch from the pressure feed tube.

(c) Remove the union bolt and 2 gaskets, and disconnect the tube from the PS vane pump assembly.

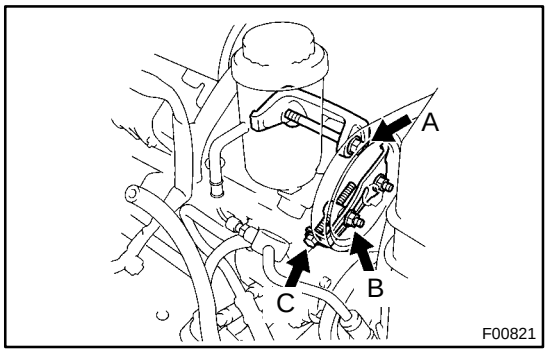

4. REMOVE DRIVE BELT

(a) Loosen the bolt A and nut B.

(b) Loosen the bolt C.

5. REMOVE PS VANE PUMP ASSEMBLY

Remove the bolt A and nut B.

SR1HU–01

REPLACEMENT

REPLACE OIL SEAL

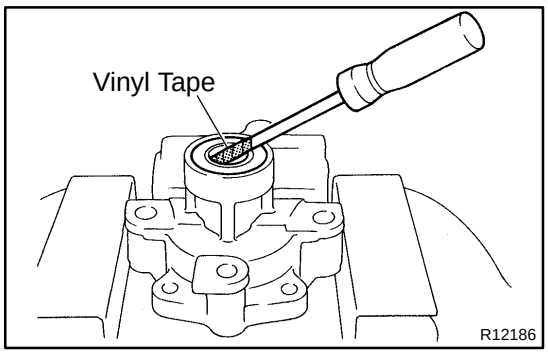

(a) Using a screwdriver with vinyl tape wound around its tip, remove the oil seal.

NOTICE:

Be careful not to damage the bushing of the front housing.

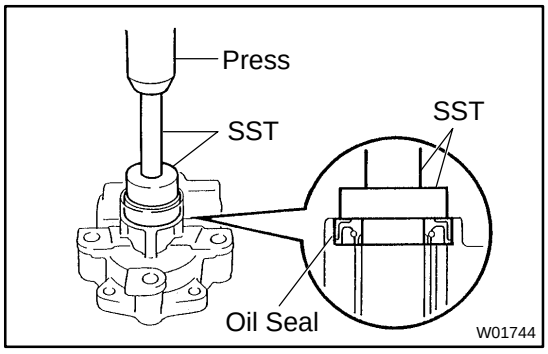

(b) Coat a new oil seal lip with power steering fluid.

(c) Using SST, press in the oil seal.

SST 09950–60010 (09951–00330),
09950–70010 (09951–07100)

NOTICE:

Make sure to install the oil seal facing the correct direction.

STEERING SYSTEM

SR042–01

PRECAUTION

- **Care must be taken to replace parts properly because they could affect the performance of the steering system and result in a driving hazard.**
- **The TOYOTA TACOMA is equipped with an SRS (Supplemental Restraint System) such as the driver airbag and front passenger airbag. Failure to carry out service operation in the correct sequence could cause the SRS to unexpectedly deploy during servicing, possibly leading to a serious accident. Before servicing (including removal or installation of parts, inspection or replacement), be sure to read the precautionary notices in the RS section.**

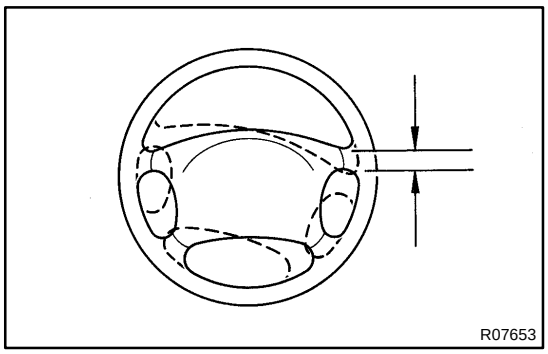

STEERING WHEEL

SR048–02

INSPECTION

1. CHECK STEERING WHEEL FREEPLAY

(a) Stop the vehicle and face the tires straight ahead.

(b) Rock the steering wheel gently up and down with a finger lightly, check the steering wheel freeplay.

Maximum freeplay: 30 mm (1.18 in.)

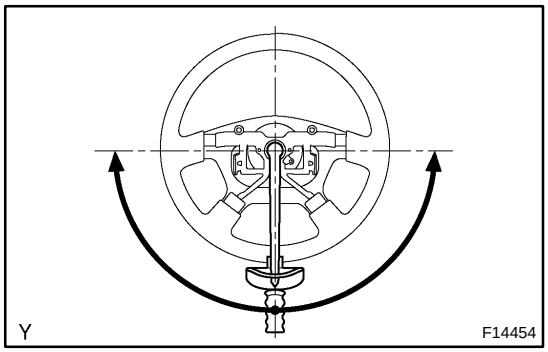

2. CHECK STEERING EFFORT

(a) Center the steering wheel.

(b) Remove the steering wheel pad (See page SR–14).

(c) Start the engine and run it at idle.

(d) Measure the steering effort in both directions.

Reference: 4.9 N·m (50 kgf·cm, 43 in.·lbf)

HINT:

Be sure to consider the tire type, pressure and contact surface before making your diagnosis.

(e) Torque the steering wheel set nut.

Torque: 50 N·m (500 kgf·cm, 35 ft·lbf)

(f) Install the steering wheel pad (See page SR–21).

SR1HN–01

REPAIR PROCEDURES

HINT:

This is the repair procedure for steering off center.

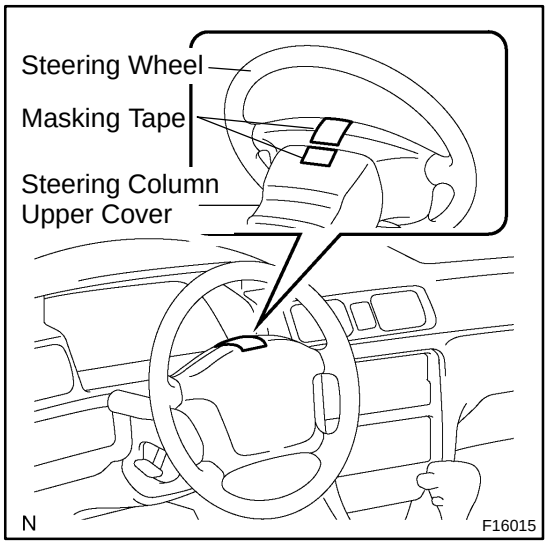

1. INSPECT STEERING WHEEL OFF CENTER

(a) Apply masking tape on the top center of the steering wheel and steering column upper cover.

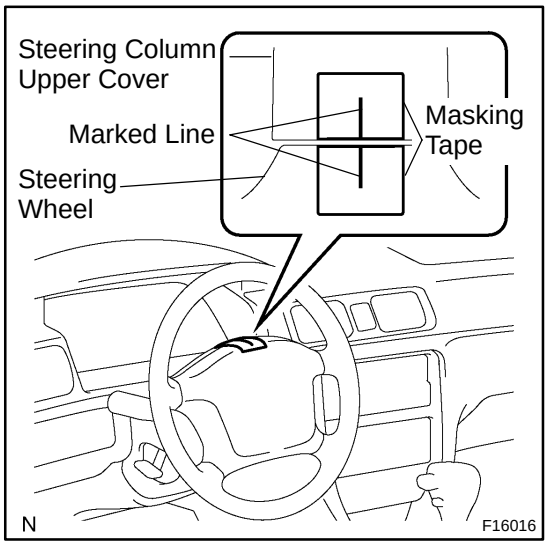

(b) Drive the vehicle in a straight line for 100 meters at a constant speed of 35 mph (56 km/h), and hold the steering wheel to maintain the course.

(c) Draw a line on the masking tape as shown in the illustration.

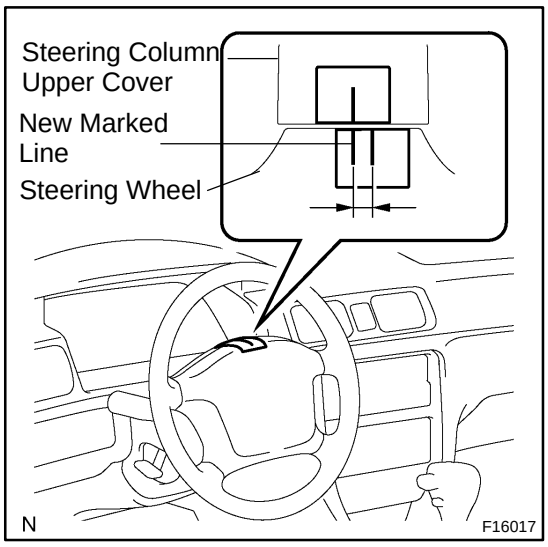

(d) Turn the steering wheel to its straight position.

HINT:

Refer to the upper surface of the steering wheel, steering spoke and SRS airbag line for the straight position.

(e) Draw a new line on the masking tape of the steering wheel as shown in the illustration.

(f) Measure the distance between the 2 lines on the masking tape of the steering wheel.

(g) Convert the measured distance to steering angle.
Measured distance 1 mm (0.04 in.) = Steering angle approximately 1 deg.

HINT:

Make a note of the steering angle.

2. ADJUST STEERING ANGLE

(a) Lift up the vehicle.

NOTICE:

The adjustment method for steering angle is different depending on the models. Check whether it is type A or B.

(b) Draw a line on the RH and LH tie rod and rack ends where it can easily be seen.

(c) Using a paper gauge, measure the distance from RH and LH tie rod ends to the rack end screws.

HINT:

- Measure the RH side and LH side.
- Make a note of the measured values.

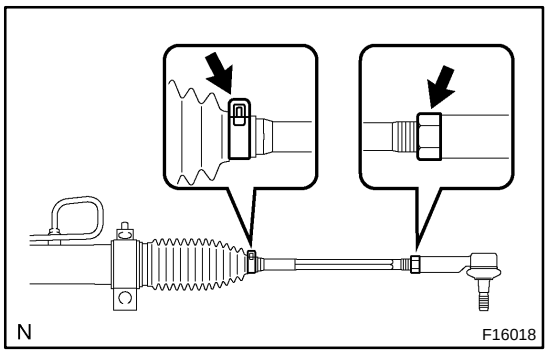

(d) Remove the RH and LH boot clips from the rack boots.

(e) Loosen the RH and LH lock nuts.

(f) Turn the RH and LH rack end by the same amount (but in different directions) according to the steering angle.
1 turn 360 deg. of rack end (1.5 mm (0.059 in.) horizontal movement) = 12 deg. of steering angle

(g) Tighten the RH and LH lock nuts by the specified torque.

NOTICE:

Make sure that the difference in length between RH and LH tie rod ends and rack end screws are within 1.5 mm (0.059 in.).

(h) Install the RH and LH boot clips.

TROUBLESHOOTING

SR043–03

PROBLEM SYMPTOMS TABLE

Use the table below to help you find the cause of the problem. The numbers indicate the priority of the likely cause of the problem. Check each part in the order shown. If necessary, repair or replace these parts.

Symptom	Suspect Area	See page
Hard steering	1. Tires (Improperly inflated)	SA–4
	2. Power steering fluid level (Low)	SR–5
	3. Drive belt (Loose)	SR–3
	4. Front wheel alignment (Incorrect)	SA–6
		SA–10
	5. Steering system joints (Worn)	–
	6. Suspension arm ball joints (Worn)	SA–86
		SA–111
		SA–105
		SA–116
	7. Steering column (Binding)	–
	8. Power steering vane pump	SR–32
		SR–43
	9. Steering gear	SR–54
		SR–73
Poor return	1. Tires (Improperly inflated)	SA–4
	2. Front wheel alignment (Incorrect)	SA–6
		SA–10
	3. Steering column (Binding)	–
	4. Steering gear	SR–54
		SR–73
Excessive play	1. Steering system joints (Worn)	–
	2. Suspension arm ball joints (Worn)	SA–86
		SA–111
		SA–105
		SA–116
	3. Universal Joint, Intermediate shaft, Sliding yoke (Worn)	SR–14
	4. Front wheel bearing (Worn)	SA–14
		SA–22
	5. Steering gear	SR–54
		SR–73
Abnormal noise	1. Power steering fluid level (Low)	SR–5
	2. Steering system joints (Worn)	–
	3. Power steering vane pump	SR–32
		SR–43
	4. Steering gear	SR–54
		SR–73

TILT STEERING COLUMN

COMPONENTS

SR04F–04

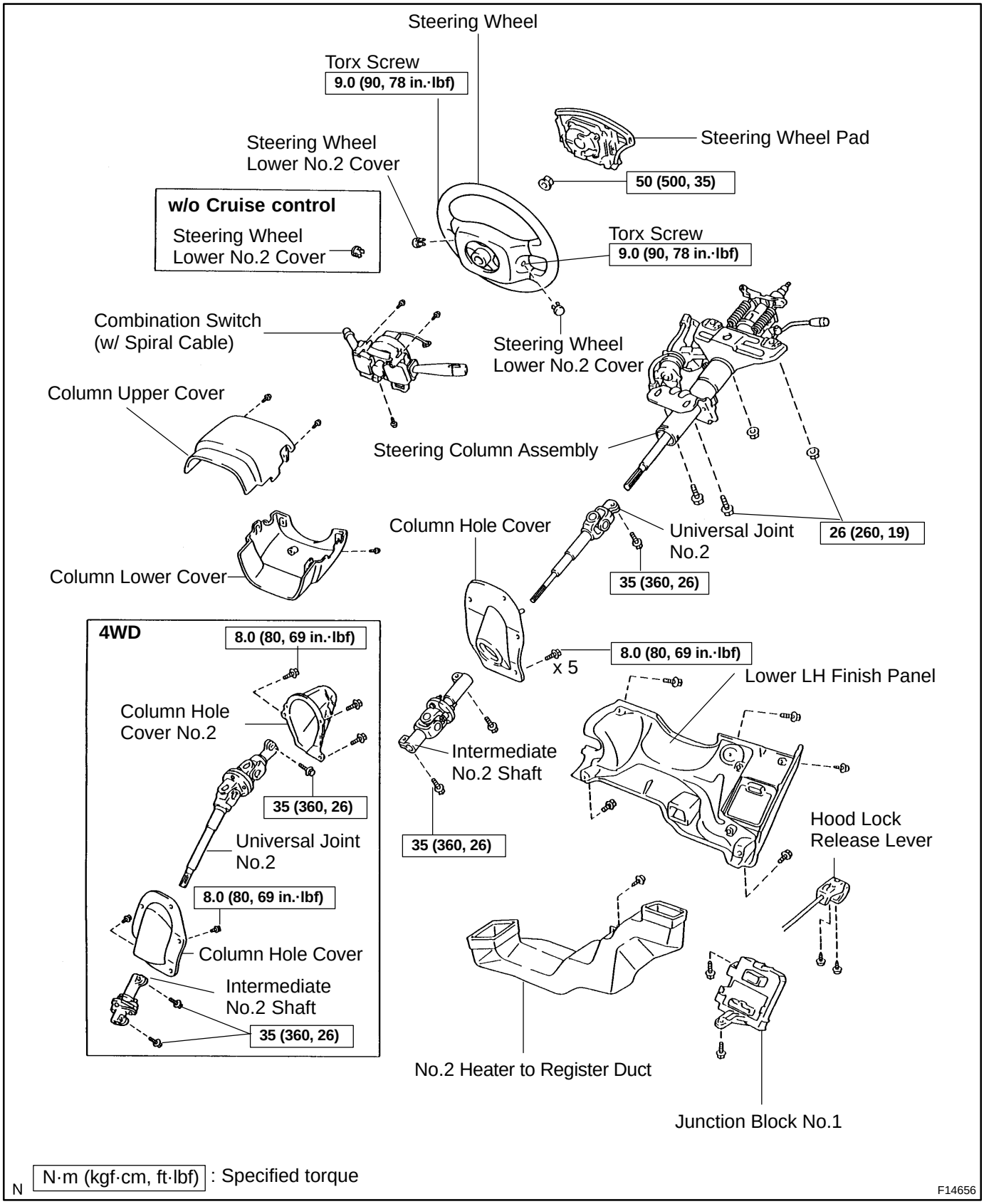

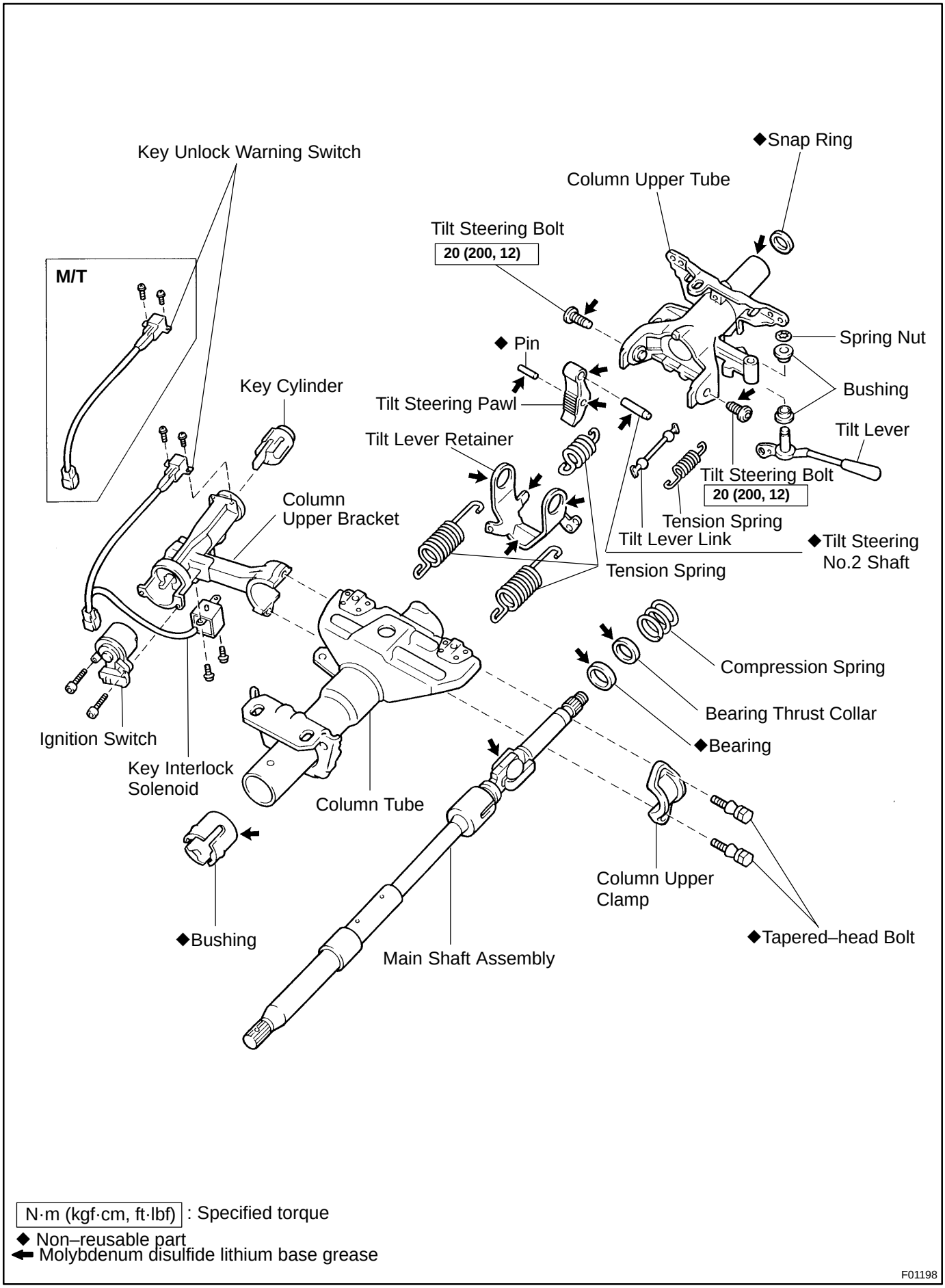
Key Unlock Warning Switch
M/T
◆Snap Ring
Column Upper Tube
Tilt Steering Bolt
20 (200, 12)
◆ Pin
Spring Nut
Bushing
Key Cylinder
Tilt Steering Pawl
Tilt Lever
Tilt Lever Retainer
Tilt Steering Bolt
20 (200, 12)
Column
Upper Bracket
Tension Spring
Tilt Lever Link
◆Tilt Steering
No.2 Shaft
Tension Spring
Compression Spring
Bearing Thrust Collar
◆Bearing
Ignition Switch
Key Interlock
Solenoid
Column Tube
Column Upper
Clamp
◆Bushing
◆Tapered–head Bolt
Main Shaft Assembly
N·m (kgf·cm, ft·lbf) : Specified torque
◆ Non–reusable part
Molybdenum disulfide lithium base grease
F01198

SR04H–03

DISASSEMBLY

NOTICE:

When using a vise, do not overtighten it.

1. REMOVE COLUMN UPPER BRACKET AND COLUMN UPPER CLAMP (See page SR–17)

2. REMOVE 4 TENSION SPRINGS

HINT:

Remove the springs with the tilt function at maximum tilt up.

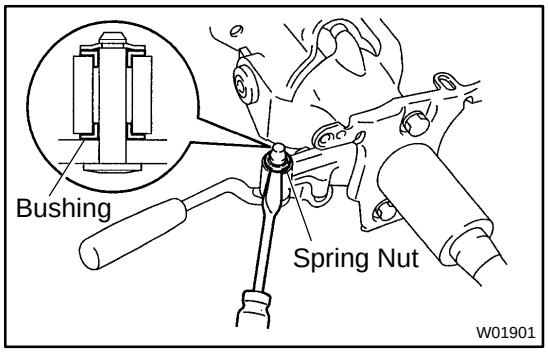

3. REMOVE TILT LEVER

(a) Using a screwdriver, remove the spring nut.

(b) Remove the tilt lever.

(c) Remove the 2 bushings from the column upper tube.

4. REMOVE TILT LEVER LINK

5. REMOVE COLUMN UPPER TUBE WITH MAIN SHAFT ASSEMBLY

(a) Using a hexagon wrench, remove the 2 tilt steering bolts.

(b) Remove the column upper tube with the main shaft from the column tube.

6. REMOVE TILT LEVER RETAINER

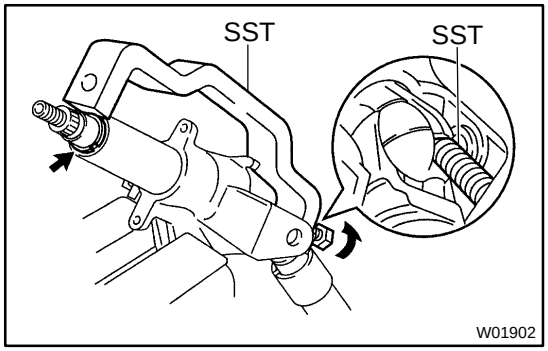

7. REMOVE MAIN SHAFT ASSEMBLY

(a) Using SST, compress the compression spring.

SST 09950–40011 (09958–04011)

NOTICE:

Do not bend the universal joint of the shaft more than 20°.

(b) Using a snap ring expander, remove the snap ring from the shaft.

(c) Remove the main shaft from the column upper tube.

(d) Remove the compression spring and bearing thrust collar from the shaft.

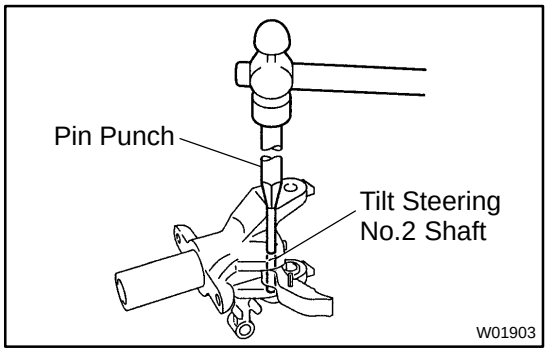

8. REMOVE TILT STEERING PAWL

Using a pin punch and hammer, tap out the tilt steering No.2 shaft and remove the tilt steering pawl.

SR04I–01

INSPECTION

(See page SR–18)

SR04K–01

INSTALLATION

(See page SR–21)

SR04J–04

REASSEMBLY

NOTICE:

When using a vise, do not overtighten it.

1. COAT PARTS INDICATED BY ARROWS WITH MOLYBDENUM DISULFIDE LITHIUM BASE GREASE (See page SR–24)

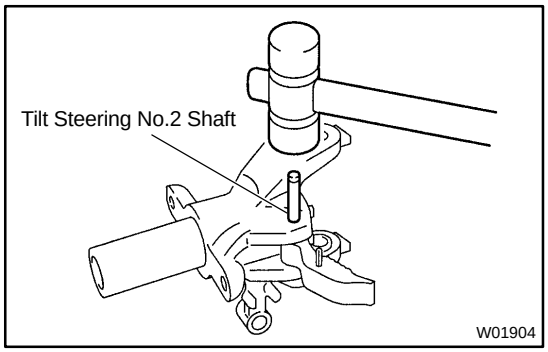

2. INSTALL TILT STEERING PAWL

Using a plastic hammer, tap in a new tilt steering No.2 shaft and install the pawl.

NOTICE:

Tap the shaft completely into the steering column upper tube.

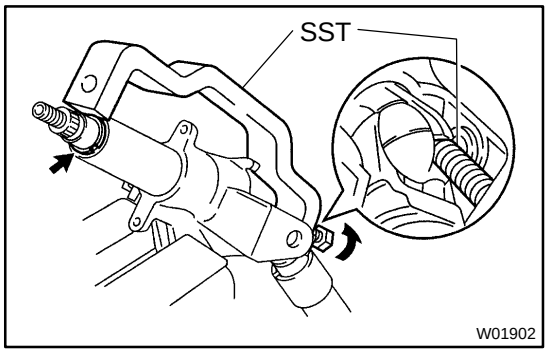

3. INSTALL MAIN SHAFT ASSEMBLY

(a) Install the bearing thrust collar and compression spring to the shaft.

(b) Install the shaft to the column upper tube.

(c) Using SST, compress the compression spring.
SST 09950–40011 (09958–04011)

NOTICE:

Do not bend the universal joint of the shaft more than 20°.

(d) Using a snap ring expander, install a new snap ring to the shaft.

4. INSTALL TILT LEVER RETAINER

5. INSTALL COLUMN UPPER TUBE WITH MAIN SHAFT ASSEMBLY

(a) Install the upper tube with the shaft to the column tube.

(b) Using a hexagon wrench, torque the 2 tilt steering bolts.
Torque: 20 N·m (200 kgf·cm, 14 ft·lbf)

(c) Check that the upper tube turns smoothly.

6. INSTALL TILT LEVER LINK

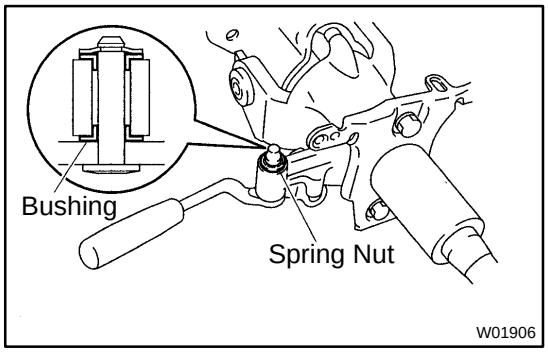

7. INSTALL TILT LEVER

(a) Install the 2 bushings to the column upper tube, as shown in the illustration.

(b) Install the tilt lever, as shown in the illustration.

(c) Install a spring nut to the lever.

8. INSTALL 4 TENSION SPRINGS

HINT:

Install the springs with the tilt function at maximum tilt up.

9. INSTALL COLUMN UPPER BRACKET AND COLUMN UPPER CLAMP (See page SR–20)

10. CHECK TILT STEERING OPERATION

SR04G–01

REMOVAL

(See page SR–14)

AIR CONDITIONING

SS04Z–03

SERVICE DATA

Refrigerant	Charge volume		600 ± 50 g (21.16 ± 1.76 oz.)
Drive belt	Tension	New belt	160 ± 25 lbf
		Used belt	100 ± 20 lbf
Idle–up speed	2RZ–FE, 3RZ–FE		
		Magnetic clutch not engaged	700 ± 50 rpm
		Magnetic clutch engaged	900 ± 50 rpm
	5VZ–FE		
		Magnetic clutch not engaged	700 ± 50 rpm
		Magnetic clutch engaged	850 ± 50 rpm
Magnetic clutch	Clearance		0.5 ± 0.15 mm (0.020 ± 0.0059 in.)
	Adjust shim thickness		0.1 mm (0.004 in.)
			0.3 mm (0.012 in.)
			0.5 mm (0.020 in.)
Thermister	Resistance	at 25˚C (77˚F)	1.500 Ω

SS050–10

TORQUE SPECIFICATION

Part tightened	N·m	kgf·cm	ft·lbf
Receiver x Liquied tube	6.0	60	52 in.·lbf
Condenser x Discharge hose	10	100	7
Condenser x Liquid tube	10	100	7
Compressor x Discharge hose	10	100	7
Compressor x Suction hose	10	100	7
Cooling unit x Suction tube	32	330	24
Expansion valve x Evaporator	5.4	55	48in.·lbf
Suction line (Piping joint)	32	330	24
Liquid line (Piping joint)	14	140	10
Pressure switch x Liquied tube	10	100	7
Pressure plate x Compressor	13.2	135	9
Compressor x Compressor bracket	25	250	18
Compressor bracket x Engine	47	475	34
Idle pulley lock nut	39	400	29

AUTOMATIC TRANSMISSION (A44D)

SS05G–03

SERVICE DATA

Governor pressure		
Tire size: P205/75R15	Output shaft rpm (Vehicle speed reference)	
	1,000 rpm (32 km/h, 20 mph)	137 – 177 kPa (1.4 – 1.8 kgf/cm^2, 19 – 26 psi)
	1,800 rpm (57 km/h, 35 mph)	235 – 275 kPa (2.4 – 2.8 kgf/cm^2, 34 – 40 psi)
	3,500 rpm (111 km/h, 69 mph)	500 – 579 kPa (5.1 – 5.9 kgf/cm^2, 73 – 84 psi)
Tire size: P235/55R16	Output shaft rpm (Vehicle speed reference)	
	1,000 rpm (32 km/h, 20 mph)	137 – 177 kPa (1.4 – 1.8 kgf/cm^2, 19 – 26 psi)
	1,800 rpm (58 km/h, 36 mph)	235 – 275 kPa (2.4 – 2.8 kgf/cm^2, 34 – 40 psi)
	3,500 rpm (113 km/h, 70 mph)	500 – 579 kPa (5.1 – 5.9 kgf/cm^2, 73 – 84 psi)
Line pressure (Wheel locked)		
Engine idling	D position	441 – 500 kPa (4.5 – 5.1 kgf/cm^2, 64 – 73 psi)
	R position	667 – 745 kPa (6.8 – 7.6 kgf/cm^2, 97 – 108 psi)
A/T stall (Throttle valve fully opened)	D position	990 – 1,167 kPa (10.1 – 11.9 kgf/cm^2, 144 – 169 psi)
	R position	1,471 – 1,863 kPa (15.0 – 19.0 kgf/cm^2, 213 – 270 psi)
Engine stall revolution	D and R position	2,250 ± 150 rpm
Time lag	N → D position	Less than 1.2 seconds
	N → R position	Less than 1.5 seconds
Engine idle speed (A/C OFF)	N position	700 ± 50 rpm
Throttle cable adjustment (Throttle valve fully opened)		
	Between boot and face and inner cable stopper	0 – 1 mm (0 – 0.04 in.)
Drive plate runout	Maximum	0.20 mm (0.0079 in.)
Torque converter clutch sleeve runout	Maximum	0.30 mm (0.0118 in.)
Torque converter clutch installation distance		More than 31.75 mm (1.2500 in.)
Shift point		
D position		
(Throttle valve fully opened)	1 → 2	49 – 57 km/h (30 – 36 mph)
	2 → 3	97 – 108 km/h (60 – 68 mph)
	O/D → 3	*
	3 → 2	90 – 101 km/h (56 – 64 mph)
	2 → 1	37 – 49 km/h (23 – 31 mph)
(Throttle valve fully closed)	3 → O/D	32 – 46 km/h (20 – 29 mph)
L position		
(Throttle valve fully opened)	2 → 1	40 – 51 km/h (25 – 32 mph)

* O/D → 3 down–shift is possible up to maximum speed.

SS05H–01

TORQUE SPECIFICATION

Part tightened		N·m	kgf·cm	ft·lbf
Torque converter clutch x Drive plate		41	420	30
Drive plate x Crankshaft		74	750	54
Extension housing x Transmission case		36	370	27
Parking lock pawl bracket x Transmission case		7.4	75	65 in.·lbf
Valve body x Transmission case		10	100	7
Oil strainer x Valve body		5.4	55	48 in.·lbf
Oil pan		4.4	45	39 in.·lbf
Governor body		3.9	40	35 in.·lbf
Oil cooler pipe union nut		34	350	25
Oil cooler elbow		34	350	25
Park/neutral position switch	Bolt	5.4	55	48 in.·lbf
	Nut	3.9	40	35 in.·lbf
Drain plug		20	205	15
Extension housing x Rear mounting insulator		25	260	19
Rear mounting bracket x Rear support member		58	590	43
Rear mounting bracket x Rear mounting insulator		18	185	13
Stiffener plate x Engine		37	380	27
Stiffener x Torque converter clutch housing		37	380	27
Control shaft lever x Control cable		13	130	9
Transmission x Engine		71	730	53
Vehicle speed sensor		16	160	12
Starter x Transmission case		39	400	29

AUTOMATIC TRANSMISSION (A340E, A340F)

SS053–05

SERVICE DATA

Line pressure (Wheel locked)		
(3RZ–FE)		
	Engine idling	
	D position	377 – 436 kPa (3.8 – 4.4 kgf/cm^2, 55 – 62 psi)
	R position	536 – 634 kPa (5.5 – 6.5 kgf/cm^2, 78 – 92 psi)
	at stall (Throttle valve fully opened)	
	D position	1,037 – 1,174 kPa (10.6 – 12.0 kgf/cm^2, 150 – 170 psi)
	R position	1,310 – 1,643 kPa (13.4 – 16.8 kgf/cm^2, 190 – 238 psi)
(5VZ–FE)		
	Engine idling	
	D position	382 – 441 kPa (3.9 – 4.5 kgf/cm^2, 55 – 64 psi)
	R position	588 – 686 kPa (6.0 – 7.0 kgf/cm^2, 85 – 100 psi)
	at stall (Throttle valve fully opened)	
	D position	1,089 – 1,226 kPa (11.1 – 12.5 kgf/cm^2, 158 – 178 psi)
	R position	1,461 – 1,794 kPa (14.9 – 18.3 kgf/cm^2, 212 – 260 psi)
Engine stall revolution (D and R positions)	3RZ–FE	2,450 ± 150 rpm
	5VZ–FE	2,250 ± 150 rpm
Time lag	N → D position	Less than 1.2 seconds
	N → R position	Less than 1.5 seconds
Engine idle speed (A/C OFF and N position)		700 ± 50 rpm
Extension housing oil seal drive in depth from flat end		0 – 0.3 mm (0 – 0.012 in.)
Throttle cable adjustment		Between boot end face and inner cable stopper
(Throttle valve fully opened)		0 – 1 mm (0 – 0.04 in.)
Drive plate runout	Max.	0.20 mm (0.0079 in.)
Torque converter runout	Max.	0.30 mm (0.0118 in.)
Torque converter installation distance	3R–FE	More than 31.75 mm (1.2500 in.)
	5VZ–FE	More than 17.95 mm (0.7067 in.)

Lock–up point (NORM and PWR pattern)		
(3RZ–FE / A340E)	Tire size: P265 / 70R16	
D position		
(Throttle valve opening 5%)	Lock–up ON	82 – 86 km/h (51 – 53 mph)
	Lock–up OFF	75 – 79 km/h (47 – 49 mph)
(3RZ–FE / A340E)	Tire size: P225 / 75R15	
D position		
(Throttle valve opening 5%)	Lock–up ON	83 – 87 km/h (52 – 54 mph)
	Lock–up OFF	76 – 81 km/h (47 – 50 mph)
(3RZ–FE / A340F)	Tire size: P265 / 70R16	
D position		
(Throttle valve opening 5%)	Lock–up ON	76 – 81 km/h (47 – 50 mph)
	Lock–up OFF	70 – 75 km/h (44 – 47 mph)
(3RZ–FE / A340F)	Tire size: P225 / 75R15	
D position		
(Throttle valve opening 5%)	Lock–up ON	78 – 83 km/h (48 – 52 mph)
	Lock–up OFF	72 – 77 km/h (45 – 48 mph)
(5VZ–FE / A340E)	Tire size: P265 / 70R16	
D position		
(Throttle valve opening 5%)	Lock–up ON	73 – 78 km/h (45 – 48 mph)
	Lock–up OFF	66 – 71 km/h (41 – 44 mph)
(5VZ–FE / A340E)	Tire size: P225 / 75R15	
D position		
(Throttle valve opening 5%)	Lock–up ON	71 – 76 km/h (44 – 47 mph)
	Lock–up OFF	64 – 69 km/h (40 – 43 mph)
(5VZ–FE / A340F)	Tire size: P265 / 70R16	
D position		
(Throttle vale opening 5%)	Lock–up ON	73 – 78 km/h (45 – 48 mph)
	Lock–up OFF	66 – 71 km/h (41 – 44 mph)
(5VZ–FE / A340F)	Tire size: P225 / 75R15	
D position		
(Throttle vale opening 5%)	Lock–up ON	71 – 76 km/h (44 – 47 mph)
	Lock–up OFF	64 – 69 km/h (40 – 43 mph)

Shift schedule (NORM and PWR pattern)		
(3RZ–FE / A340E)	Tire size: P265 / 70R16	
D position		
(Throttle valve fully opened)	1 → 2	58 – 63 km/h (36 – 39 mph)
	2 → 3	107 – 114 km/h (66 – 71 mph)
	3 → O/D	141 – 149 km/h (88 – 93 mph)
	O/D → 3	135 – 142 km/h (84 – 88 mph)
	3 → 2	98 – 106 km/h (61 – 66 mph)
	2 → 1	46 – 51 km/h (29 – 32 mph)
(Throttle valve fully closed)	3 → O/D	34 – 38 km/h (21 – 24 mph)
	O/D → 3	25 – 30 km/h (16 – 19 mph)
2 position		
(Throttle valve fully opened)	1 → 2	58 – 63 km/h (36 – 39 mph)
	3 → 2	112 – 119 km/h (70 – 74 mph)
	2 → 1	46 – 51 km/h (29 – 32 mph)
L position		
(Throttle valve fully opened)	3 → 2	95 – 103 km/h (59 – 64 mph)
	2 → 1	54 – 58 km/h (34 – 36 mph)
(3RZ–FE / A340E)	Tire size: P225 / 75R15	
D position		
(Throttle valve fully opened)	1 → 2	58 – 64 km/h (36 – 40 mph)
	2 → 3	107 – 116 km/h (66 – 72 mph)
	3 → O/D	144 – 152 km/h (89 – 94 mph)
	O/D → 3	137 – 145 km/h (85 – 90 mph)
	3 → 2	98 – 108 km/h (61 – 67 mph)
	2 → 1	46 – 52 km/h (29 – 32 mph)
(Throttle valve fully closed)	3 → O/D	35 – 39 km/h (22 – 24 mph)
	O/D → 3	26 – 30 km/h (16 – 19 mph)
2 position		
(Throttle valve fully opened)	1 → 2	57 – 61 km/h (35 – 38 mph)
	3 → 2	114 – 121 km/h (71 – 75 mph)
	2 → 1	45 – 49 km/h (28 – 30 mph)
L position		
(Throttle valve fully opened)	3 → 2	97 – 105 km/h (60 – 65 mph)
	2 → 1	55 – 59 km/h (34 – 37 mph)
(3RZ–FE / A340F)	Tire size: P265 / 70R16	
D position		
(Throttle valve fully opened)	1 → 2	54 – 59 km/h (34 – 37 mph)
	2 → 3	99 – 108 km/h (62 – 67 mph)
	3 → O/D	132 – 140 km/h (82 – 87 mph)
	O/D → 3	126 – 134 km/h (78 – 83 mph)
	3 → 2	91 – 100 km/h (57 – 62 mph)
	2 → 1	43 – 48 km/h (27 – 30 mph)
(Throttle valve fully closed)	3 → O/D	32 – 36 km/h (20 – 22 mph)
	O/D → 3	24 – 28 km/h (15 – 17 mph)
2 position		
(Throttle valve fully opened)	1 → 2	54 – 59 km/h (34 – 37 mph)
	3 → 2	104 – 112 km/h (65 – 70 mph)
	2 → 1	43 – 48 km/h (27 – 30 mph)
L position		
(Throttle valve fully opened)	3 → 2	89 – 97 km/h (55 – 60 mph)
	2 → 1	50 – 55 km/h (31 – 34 mph)

(3RZ–FE / A340F)	Tire size: P225 / 75R15	
D position		
(Throttle valve fully opened)	1 → 2	56 – 61 km/h (35 – 38 mph)
	2 → 3	102 – 111 km/h (63 – 69 mph)
	3 → O/D	135 – 144 km/h (84 – 89 mph)
	O/D → 3	129 – 138 km/h (80 – 86 mph)
	3 → 2	94 – 103 km/h (58 – 64 mph)
	2 → 1	44 – 49 km/h (27 – 30 mph)
(Throttle valve fully closed)	3 → O/D	33 – 37 km/h (21 – 23 mph)
	O/D → 3	24 – 29 km/h (15 – 18 mph)
2 position		
(Throttle valve fully opened)	1 → 2	56 – 61 km/h (34 – 38 mph)
	3 → 2	107 – 116 km/h (66 – 72 mph)
	2 → 1	44 – 49 km/h (27 – 30 mph)
L position		
(Throttle valve fully opened)	3 → 2	91 – 100 km/h (57 – 62 mph)
	2 → 1	52 – 56 km/h (32 – 35 mph)
(5VZ–FE / A340E)	Tire size: P265 / 70R16	
D position		
(Throttle valve fully opened)	1 → 2	58 – 63 km/h (36 – 39 mph)
	2 → 3	109 – 117 km/h (68 – 73 mph)
	3 → O/D	147 – 156 km/h (91 – 97 mph)
	O/D → 3	140 – 149 km/h (87 – 93 mph)
	3 → 2	100 – 109 km/h (62 – 68 mph)
	2 → 1	46 – 50 km/h (29 – 31 mph)
(Throttle valve fully closed)	3 → O/D	42 – 47 km/h (26 – 29 mph)
	O/D → 3	22 – 27 km/h (14 – 18 mph)
2 position		
(Throttle valve fully opened)	1 → 2	58 – 63 km/h (36 – 39 mph)
	3 → 2	116 – 125 km/h (72 – 78 mph)
	2 → 1	46 – 50 km/h (29 – 31 mph)
L position		
(Throttle valve fully opened)	3 → 2	99 – 107 km/h (62 – 68 mph)
	2 → 1	56 – 61 km/h (35 – 38 mph)
(5VZ–FE / A340E)	Tire size: P225 / 75R15	
D position		
(Throttle valve fully opened)	1 → 2	56 – 61 km/h (35 – 38 mph)
	2 → 3	105 – 114 km/h (65 – 71 mph)
	3 → O/D	142 – 152 km/h (88 – 94 mph)
	O/D → 3	135 – 145 km/h (84 – 90 mph)
	3 → 2	97 – 106 km/h (60 – 66 mph)
	2 → 1	44 – 49 km/h (27 – 30 mph)
(Throttle valve fully closed)	3 → O/D	41 – 46 km/h (25 – 29 mph)
	O/D → 3	22 – 26 km/h (14 – 16 mph)
2 position		
(Throttle valve fully opened)	1 → 2	56 – 61 km/h (35 – 38 mph)
	3 → 2	112 – 121 km/h (70 – 75 mph)
	2 → 1	44 – 49 km/h (27 – 30 mph)
L position		
(Throttle valve fully opened)	2 → 1	95 – 105 km/h (59 – 65 mph)
	2 → 1	54 – 59 km/h (34 – 37 mph)

(5VZ–FE / A340F)	Tire size: P265 / 70R16	
D position		
(Throttle valve fully opened)	1 → 2	58 – 63 km/h (36 – 39 mph)
	2 → 3	109 – 117 km/h (68 – 73 mph)
	3 → O/D	147 – 156 km/h (91 – 97 mph)
	O/D → 3	140 – 149 km/h (87 – 93 mph)
	3 → 2	100 – 109 km/h (62 – 68 mph)
	2 → 1	46 – 50 km/h (29 – 31 mph)
(Throttle valve fully closed)	3 → O/D	42 – 47 km/h (26 – 29 mph)
	O/D → 3	22 – 27 km/h (14 – 18 mph)
2 position		
(Throttle valve fully opened)	1 → 2	58 – 63 km/h (36 – 39 mph)
	3 → 2	116 – 125 km/h (72 – 78 mph)
	2 → 1	46 – 50 km/h (29 – 31 mph)
L position		
(Throttle valve fully opened)	3 → 2	99 – 107 km/h (62 – 68 mph)
	2 → 1	56 – 61 km/h (35 – 38 mph)
(5VZ–FE / A340F)	Tire size: P225 / 75R15	
D position		
(Throttle valve fully opened)	1 → 2	56 – 61 km/h (35 – 38 mph)
	2 → 3	105 – 114 km/h (65 – 71 mph)
	3 → O/D	142 – 152 km/h (88 – 94 mph)
	O/D → 3	135 – 145 km/h (84 – 90 mph)
	3 → 2	97 – 106 km/h (60 – 66 mph)
	2 → 1	44 – 49 km/h (27 – 30 mph)
(Throttle valve fully closed)	3 → O/D	41 – 46 km/h (25 – 29 mph)
	O/D → 3	22 – 26 km/h (14 – 16 mph)
2 position		
(Throttle valve fully opened)	1 → 2	56 – 61 km/h (35 – 38 mph)
	3 → 2	112 – 121 km/h (70 – 75 mph)
	2 → 1	44 – 49 km/h (27 – 30 mph)
L position		
(Throttle valve fully opened)	2 → 1	95 – 105 km/h (59 – 65 mph)
	2 → 1	54 – 59 km/h (34 – 37 mph)

SS054–03

TORQUE SPECIFICATION

Part tightened		N·m	kgf·cm	ft·lbf
Transmission output lock nut		123	1,250	90
Drain plug		20	205	15
Engine mounting spacer x Transmission		28.5	291	21
Engine rear mounting insulator x Engine mounting spacer		65	660	48
Crossmember x Frame		72	734	53
Crossmember x Engine rear mounting		18.5	189	14
No.1 vehicle speed sensor x Transmission		16	160	12
No.2 vehicle speed sensor x Transmission		5.4	55	48 in.·lbf
ATF temperature sensor x Transmission		15	155	11
Oil cooler pipe union nut		34	350	25
Park/neutral start switch	Nut	6.9	70	61 in.·lbf
	Bolt	13	130	9
Shift solenoid valve x Valve body		10	100	7
Valve body x Transmission		10	100	7
Oil strainer x Valve body (A340E)		10	100	7
Oil strainer case x Valve body (A340F)		10	100	7
Oil strainer x Oil strainer case (A340F)		6.9	70	61 in.·lbf
Oil pan x Transmission		7.4	75	65 in.·lbf
Parking lock pawl bracket x Transmission		7.4	75	65 in.·lbf
Throttle cable retainer x Transmission		10	100	7
Engine under cover		29	296	21
Oil filler pipe x Transmission		12	120	9
Oil cooler pipe clamp		4.9	50	43 in.·lbf
Shift control rod x Shift control lever		13	130	10
Rear end plate x Transmission	3RZ–FE	37	380	27
	5VZ–FE	18	185	13
Torque converter clutch x Drive plate		41	420	30
Starter x Transmission		39	400	29
Transmission x Engine		71	730	53
Front differential rear mounting cushion x Member (A340F)	Nut	87	890	64
	Bolt	108	1,100	80
Drive plate x Engine	3RZ–FE	74	750	54
	5VZ–FE	83	850	61

BODY ELECTRICAL

SS04Y–05

SERVICE DATA

DAYTIME RUNNING LIGHT RELAY (Wire harness side)	
Tester connection	Specified condition
3 – Ground (Constant)	Battery positive voltage
6 – Ground (Constant)	Battery positive voltage
9 – Ground (Engine stop)	No voltage
9 – Ground (Engine Running)	Battery positive voltage
10 – Ground (Brake fluid level warning position ON)	Battery positive voltage
12 – Ground (Ignition switch position: LOCK or ACC)	No voltage
12 – Ground (Ignition switch position: ON or START)	Battery positive voltage
TURN SIGNAL FLASHER	
Flashes / Minute	60 – 120
SPEEDOMETER (USING A SPEEDOMETER TESTER)	
USA:	
Standard indication (mph)	Allowable range (mph)
20	19 – 22
40	39 – 42.5
60	59.5 – 63.5
80	79.5 – 84
100	100 – 105
CANADA:	
Standard indication (km/h)	Allowable range (km/h)
20	18 – 23
40	40 – 44
60	60 – 64.5
80	80 – 85
100	100 – 105
120	120 – 125.5
140	140 – 146
160	160 – 167
TACHOMETER (ON–VEHICLE)	DC 13.5 V 20˚C (68˚F)
Standard indication (rpm)	Allowable range (rpm)
700	630 – 770
3,000	2,850 – 3,150
5,000	4,850 – 5,150
7,000	6,790 – 7,210
FUEL RECEIVER GAUGE (w/ Tachometer)	
Between terminals	Resistance Ω
A – B	Approx. 137
A – C	Approx. 260.3
B – C	Approx. 123.3
FUEL RECEIVER GAUGE (w/o Tachometer)	
Between terminals	Resistance Ω
A – B	Approx. 160

A – C	Approx. 84
B – C	Approx. 244
FUEL SENDER GAUGE (70 Litet Tank)	
Float position: mm (in.)	Resistance Ω
F Approx. 82.7 (3.26)	Approx. 3.0
1/2 17.1 (0.673)	Approx. 30.8
E Approx. 124.6 (4.91)	Approx. 110.0
FUEL SENDER GAUGE (60 Liter Tank)	
Float position: mm (in.)	Resistance Ω
F Approx. 69.3 (2.73)	Approx. 3.0
1/2 20.1 (0.79)	Approx. 30.8
E Approx. 108.8 (4.28)	Approx. 110.0
ENGINE COOLANT TEMPERATURE GAUGE (w/ Tachometer)	
Between terminals	Resistance Ω
A–B	Approx. 256.5
A–C	Approx. 181.5
B–C	Approx. 75
ENGINE COOLANT TEMPERATURE GAUGE (w/o Tachometer)	
Between terminals	Resistance Ω
A–B	Approx. 139
A–C	Approx. 75
B–C	Approx. 214

BODY

TORQUE SPECIFICATION

SS05D–04

Part tightened	N·m	kgf·cm	ft·lbf
FRONT BUMPER			
Front bumber arm x Front bumper assembly	23	230	17
Reinforcement x Body	20	200	15
Retainer x Bumper cover, Bumper	5.5	56	49 in.·lbf
Side mounting bracket x Bumper	5.5	56	49 in.·lbf
Bumper cover x Bumper	5.5	56	49 in.·lbf
Bumper x Valance Panel	5.5	56	49 in.·lbf
REAR BUMPER			
Rear bumper arm x Body	79	810	59
Rear bumper arm x Rear bumper assembly	79	810	59
Rear bumper bar x Reinforcement (with nut)	45	460	33
Rear bumper bar x Reinforcement (with torx bolt)	29	300	22
HEADLIGHT			
Headlight x Body	4.9	50	43 in.·lbf
HOOD			
Hood hinge x Hood	13	130	10
Hood hinge x Body	18	180	13
Hood lock x Body	8.0	82	71 in.·lbf
FRONT DOOR			
Outside handle x Front door	5.0	50	43 in.·lbf
Door lock x Body	12	120	9
Door hinge x Body	23	230	17
Door checker x Body	5.0	50	43 in.·lbf
Window regulator x Front door	5.0	50	43 in.·lbf
Door glass x Window regulator	5.0	50	43 in.·lbf
Door hinge x Front door	23	230	17
Door lock striker x Body	12	120	9
REAR DOOR			
Door lock x Body	5.0	50	43 in.·lbf
Door hinge x Rear door	23	230	17
Door hinge x Body	20	200	15
Door checker x Body	5.0	50	43 in.·lbf
Window regulator x Front door	5.0	50	43 in.·lbf
Door glass x Window regulator	5.0	50	43 in.·lbf
Door lock striker x Body	12	120	9
WIPER AND WASHER			
Wiper motor x Body	5.4	55	47 in.·lbf
Wiper link x Body	5.4	55	47 in.·lbf
Wiper arms x Wiper link	20	205	15

Part tightened		N·m	kgf·cm	ft·lbf
REMOVABLE ROOF				
Removable roof hinge case x Body		3.5	35	30 in.·lbf
Removable roof lock base x Body		6.0	60	52 in.·lbf
Removable roof handle x Removable roof		3.0	30	26 in.·lbf
INSTRUMENT PANEL				
Steering wheel set nut		35	375	26
Front passenger airbag assembly x Instrument panel		5.0	51	44 in.·lbf
Front passenger airbag assembly x Reinforcement		20	205	15
TAIL GATE				
Tail gate cable x Tail gate		14	140	10
Tail gate lock striker x Body		12	120	9
Tail gate hinge x Body	A bolt:	30	310	22
	B bolt:	24	240	17
	C bolt:	28	290	19
FRONT SEAT (Separate Type)				
Front seat assembly x Body		37	380	27
Seat back frame x Outer track, Inner track		18	185	13
Outer track, Inner track x Seat cushion frame		18	185	13
FRONT SEAT (Sports Type)				
Front seat assembly x Body		37	380	27
Outer track, Inner track x Seat cushion frame		20	205	15
Seat back frame x Outer track, Inner track		20	205	15
FRONT SEAT (Bench Type)				
Front seat assembly x Body		37	380	27
Seat cushion frame x Outer track		18	185	13
Seat back frame x Outer track, Inner track		18	185	13
FRONT SEAT (Split Bench Type)				
Front seat assembly x Body		37	380	27
Seat back frame x Outer Inner track		20	205	15
Seat adjuster x Outer track		20	205	15
Seat back frame x Seat adjuster		20	205	15
Armrest assembly x Inner track		20	205	15
Seatback lower bracket x Seat cushion frame		20	205	15
Armrest x Seatback lower bracket		5.0	51	44 in.·lbf
Armrest lock x Seatback lower bracket		20	205	15
Armrest lock x Armrest		20	205	15
REAR SEAT (Extra Cab)				
Rear seatback x Body		18	185	13
Rear seat hinge x Body		18	185	13
REAR SEAT (Double Cab)				
Side seat hinge upper plate x Seat cushion frame		21	215	15
Seatback stay bracket x Seat cushion frame		21	215	15
Seat cushion frame x Body		37	380	27

Part tightened		N·m	kgf·cm	ft·lbf
SEAT BELT (Regular Cab)				
Front seat outer belt x Body		42	430	31
Seat belt pretensioner x Body	upper bolt	36	365	27
	lower bolt	42	430	31
Front seat inner belt x Body		42	430	31
Shoulder belt anchor adjuster x Body		42	430	31
SEAT BELT (Extra Cab)				
Front seat outer belt x Body		42	430	31
Seat belt pretensioner x Body	upper bolt	36	365	27
	lower bolt	42	430	31
Front seat inner belt x Body		42	430	31
Rear seat inner belt x Body		42	430	31
Shoulder belt anchor adjuster x Body		42	430	31
Tether anchor x Body		18	185	13
SEAT BELT (Double Cab)				
Front seat outer belt x Body		42	430	31
Seat belt pretensioner x Body	upper bolt	36	365	27
	lower bolt	42	430	31
Front seat inner belt x Body		42	430	31
Rear seat inner belt x Body		42	430	31
Shoulder belt anchor adjuster x Body		42	430	31

BRAKE

SS057–08

SERVICE DATA

Brake pedal height (from asphalt seat)		154 – 168 mm (6.06 – 6.61 in.)
Brake pedal freeplay		1 – 6 mm (0.04 – 0.24 in.)
Brake pedal reserve distance at 490 N (50 kgf, 110.2 lbf)		More than 105 mm (4.13 in.)
Brake booster push rod to piston clearance (w/ SST)		0 mm (0 in.)
Front brake pad thickness		
2WD	STD	12.0 mm (0.472 in.)
4WD, pre runner	STD	11.5 mm (0.453 in.)
	Minimum	1.0 mm (0.039 in.)
Disc thickness	STD	22.0 mm (0.866 in.)
	Minimum	20.0 mm (0.787 in.)
Disc runout	Maximum	0.07 mm (0.0028 in.)
Rear brake drum inside diameter		
2WD	STD	254.0 mm (10.000 in.)
	Maximum	256.0 mm (10.079 in.)
4WD, pre runner	STD	295.0 mm (11.614 in.)
	Maximum	297.0 mm (11.693 in.)
Rear brake shoe lining thickness		
2WD	STD	5.6 mm (0.220 in.)
4WD, pre runner	STD	6.0 mm (0.236 in.)
	Minimum	1.0 mm (0.039 in.)
Rear brake drum to shoe clearance		0.6 mm (0.024 in.)
Parking brake lever travel at 196 N (20 kgf, 44.1 lbf)		12 – 18 clicks

SS058–06

TORQUE SPECIFICATION

Part tightened		N·m	kgf·cm	ft·lbf
Master cylinder x Piston stopper bolt		8.0	80	69 in.·lbf
Master cylinder x Reservoir		1.5	15	13 in.·lbf
Master cylinder x Brake booster		13	130	9
Brake line union nut		15	155	11
Brake booster clevis lock nut		25	260	19
Brake booster x Pedal bracket		13	130	9
Bleeder plug		11	110	8
Front disc brake caliper x Torque plate	2WD	88	900	65
Front disc brake caliper x Steering knuckle	4WD, pre runner	123	1,250	90
Front disc brake torque plate x Steering knuckle	2WD	108	1,100	80
Front disc x Front axle hub	2WD	64	650	47
Front disc brake caliper x Flexible hose		30	310	22
Rear drum brake wheel cylinder x Baking plate		10	100	7
Parking brake bellcrank bracket x Backing plate		13	130	9
LSP & BV x LSP & BV bracket		13	130	9
LSP & BV bracket x Load sensing spring assembly		18	185	13
Load sensing spring assembly x Shackle No. 1		18	185	13
Shackle No. 1 x Shackle No. 2		13	130	9
Shackle No. 2 x Shackle bracket		13	130	9
LSP & BV bracket x Frame		29	300	22
Shackle bracket x Rear axle housing		29	300	22
ABS actuator bracket x ABS actuator		9.0	91.8	7
ABS actuator x ECU		1.8	18.4	16 in.·lbf
ABS actuator bracket x Body		19	195	14
Speed sensor installation bolt		8.0	82	71 in.·lbf
Front speed sensor harness x Upper arm		8.0	82	71 in.·lbf
Front speed sensor harness x Side rail		13	130	9
Rear speed sensor harness x Axle housing		13	130	9
Rear speed sensor harness x Fuel tank		13	130	9
Rear speed sensor harness x Side rail		13	130	9
Brake pedal x Pedal bracket		34	350	25

CHARGING (2RZ–FE, 3RZ–FE)

SS04D–01

SERVICE DATA

Battery	Standard voltage	at 20˚C (68˚F)	12.7 –12.9 V
Drive belt	Tension		
	New belt		116 – 169 lbf
	Used belt		66 – 88 lbf
Generator	Rated output		12 V – 70 A
	Rotor coil resistance		2.1 – 2.5 Ω
	Slip ring diameter	STD	14.2 mm – 14.4 mm (0.559 – 0.567 in.)
		Minimum	12.8 mm (0.504 in.)
	Brush exposed length	STD	9.5 – 11.5 mm (0.374 – 0.453 in.)
		Minimum	1.5 mm (0.059 in.)
Voltage regulator	Regulating voltage	at 25˚C (77˚F)	13.8 – 14.7 V

SS04E–01

TORQUE SPECIFICATION

Part tightened	N·m	kgf·cm	ft·lbf
Drive end frame x Rectifier end frame	4.5	46	40 in.·lbf
Generator pulley nut	110	1,125	81
Rectifier holder set screw	1.96	20	17.4 in.·lbf
Rear end cover x Rectifier end frame	4.5	46	40 in.·lbf
Terminal insulator mounting nut	4.1	42	36 in.·lbf
Pivot bolt (For generator)	59	600	43
Lock bolt (For generator)	29	300	21
Generator wire mounting nut	9.8	100	7.2
Bearing retainer x Drive end frame	2.6	26.5	23 in.·lbf
Rectifier holder x Drive end frame	3.9	40	34.7 in.·lbf
Voltage regulator x Rectifier holder	1.96	20	17.4 in.·lbf

CHARGING (5VZ–FE)

SS01A–01

SERVICE DATA

Battery	Voltage	at 20˚C (68˚F)	12.7 – 12.9 V
Drive belt	Tension	New belt	160 ± 20 lbf
		Used belt	100 ± 20 lbf
Generator	Rated output ampere		12 V 60 A
	Rotor coil resistance	at 20˚C (68˚F)	2.1 – 2.5 Ω
	Slip ring diameter	STD	14.2 – 14.4 mm (0.559 – 0.567 in.)
		Minimum	12.8 mm (0.504 in.)
	Brush exposed length	STD	10.5 mm (0.413 in.)
		Minimum	1.5 mm (0.059 in.)
Generator regulator	Regulating voltage	at 25˚C (77˚F)	13.7 – 14.7 V
		at 115˚C (239˚F)	13.2 – 14.0 V

SS01F–01

TORQUE SPECIFICATION

Part tightened	N·m	kgf·cm	ft·lbf
Generator x Generator bracket	51	520	38
Generator x Adjusting lever	18.5	189	25
Rectifier end frame x Drive end frame	4.5	45	39 in.·lbf
Generator pulley x Rotor	110	1,125	81
Drive end frame x Voltage regulator	2.0	20	17 in.·lbf
Generator rear end cover x Rectifier end frame	4.5	45	39 in.·lbf
Terminal insulator x Rectifier holder	4.1	42	36 in.·lbf

CLUTCH

SS05B–01

SERVICE DATA

Pedal height from floor panel		170.0–180.0 mm (6.692–7.086 in.)
Pedal height from asphalt sheet		167.0–177.0 mm (6.574–6.986 in.)
Pedal freeplay		5.0–15.0 mm (0.197–0.591 in.)
Push rod play at pedal top		1.0–5.0 mm (0.039–0.197 in.)
Clutch release point from pedal full stroke end position		25 mm (0.98 in.) or more
Clutch start switch	ON–OFF Stroke	8±0.5 mm (0.31±0.020 in.)
Slotted spring pin protrusion		1.5–3.5 mm (0.059–0.138 in.)
Disc rivet head depth	Min.	0.3 mm (0.012 in.)
Disc runout	Max.	0.8 mm (0.031 in.)
Flywheel runout	Max.	0.1 mm (0.004 in.)
Diaphragm spring finger wear	Max. depth	0.6 mm (0.024 in.)
Diaphragm spring finger wear	Max. width	5.0 mm (0.197 in.)
Diaphragm spring tip non–alignment	Max.	0.5 mm (0.020 in.)

SS05C–01

TORQUE SPECIFICATION

Part tightened		N·m	kgf·cm	ft·lbf
Clutch line union		15	155	11
Master cylinder installation nut		13	130	9
Bleeder plug		11	110	8
Release cylinder installation bolt		13	130	9
Clutch cover x Flywheel		19	195	14
Release fork support	2RZ–FE, 3RZ–FE	39	400	29
	5VZ–FE	47	480	35
Flywheel set bolt	2RZ–FE	88	900	65
	3RZ–FE	26.5	270	19
	5VZ–FE	85	850	63

COOLING (2RZ–FE, 3RZ–FE)

SS045–01

SERVICE DATA

Thermostat	Valve opening pressure		80 – 84˚C (176 – 183˚F)
	Valve lift	at 95˚C (203˚F)	8.0 mm (0.31 in.) or more
Radiator cap	Relief valve opening pressure	STD	74 – 103 kPa (0.75 – 1.05 kgf/cm^2, 10.7 – 14.9 psi)
		Minimum	59 kPa (0.6 kgf/cm^2, 8.5 psi)

SS046–01

TORQUE SPECIFICATION

Part tightened		N·m	kgf·cm	ft·lbf
Cylinder block x Drain plug		24.5	250	18
Water pump pulley x Water pump		21	210	16
Water pump x Cylinder block	12 mm head bolt	8.9	90	78 in.·lbf
	14 mm head bolt	24.5	250	18
Fan x Fluid coupling		5.5	55	49 in.·lbf
Water inlet x Water inlet housing		20	200	15
Radiator support x Radiator		5.5	55	49 in.·lbf
Radiator x Body		12.5	125	9

COOLING (5VZ–FE)

SS00Y–01

SERVICE DATA

Thermostat	Valve opening pressure		80 – 84˚C (176 – 183˚F)
	Valve lift	at 95˚C (203˚F)	8.5 mm (0.335 in .) or more
Radiator cap	Relief valve opening pressure	STD	74 – 103 kPa (0.75 – 1.05 kgf/cm^2, 10.7 – 14.9 psi)
		Minimum	59 kPa (0.6 kgf/cm^2, 8.8 psi)

SS00Z–01

TORQUE SPECIFICATION

Part tightened	N·m	kgf·cm	ft·lbf
Fan x Fluid coupling	7.4	75	65 in.·lbf
Water pump x Cylinder block	20	200	14
Water inlet x Water pump	20	200	14
Radiator support x Body	12	120	9
Radiator support x Radiator	12.7	130	9

EMISSION CONTROL (2RZ–FE, 3RZ–FE)

SS042–04

TORQUE SPECIFICATION

Part tightened	N·m	kgf·cm	ft·lbf
Charcoal canister x Body	31	316	23
PCV valve x Cylinder head cover	27	270	20
No.1 exhaust pipe with TWC x Exhaust manifold	62	630	46
No.1 exhaust pipe with TWC x No.2 exhaust pipe with TWC	48	490	35
TWC x Tailpipe	48	490	35
No.2 exhaust pipe with TWC x Tailpipe	48	490	35

EMISSION CONTROL (5VZ–FE)

TORQUE SPECIFICATION

SS00R–12

Part tightened	N·m	kgf·cm	ft·lbf
Charcoal canister x Body	31	316	23
No.1 exhaust pipe with TWC x Exhaust crossover pipe (2WD, 4WD)	62	630	46
No.1 exhaust pipe with TWC x No.2 exhaust pipe with TWC (2WD, 4WD)	48	490	35
No.2 exhaust pipe with TWC x Tail pipe (2WD, 4WD)	48	490	35
Support bracket x Transmission, Front exhaust pipe	44	450	33

ENGINE MECHANICAL (2RZ–FE, 3RZ–FE)

SS040–06

SERVICE DATA

Compression pressure	at 250 rpm	STD	1,230 kPa (12.5 kgf/cm^2, 178 psi) or more
		Minimum	880 kPa (9.0 kgf/cm^2, 127 psi)
	Difference of pressure between each cylinder		98 kPa (1.0 kgf/cm^2, 14 psi) or less
Valve clearance		Intake	0.15 – 0.25 mm (0.006 – 0.010 in.)
		Exhaust	0.25 – 0.35 mm (0.010 – 0.014 in.)
	Adjusting shim (for repair part)	Mark 2.500	2.500 mm (0.0984 in.)
		Mark 2.550	2.550 mm (0.1004 in.)
		Mark 2.600	2.600 mm (0.1024 in.)
		Mark 2.650	2.650 mm (0.1043 in.)
		Mark 2.700	2.700 mm (0.1063 in.)
		Mark 2.750	2.750 mm (0.1083 in.)
		Mark 2.800	2.800 mm (0.1102 in.)
		Mark 2.850	2.850 mm (0.1122 in.)
		Mark 2.900	2.900 mm (0.1142 in.)
		Mark 2.950	2.950 mm (0.1161 in.)
		Mark 3.000	3.000 mm (0.1181 in.)
		Mark 3.050	3.050 mm (0.1201 in.)
		Mark 3.100	3.100 mm (0.1220 in.)
		Mark 3.150	3.150 mm (0.1240 in.)
		Mark 3.200	3.200 mm (0.1260 in.)
		Mark 3.250	3.250 mm (0.1280 in.)
		Mark 3.300	3.300 mm (0.1299 in.)
Ignition timing	w/ Terminals TE1 and E1 connected of DLC1		3 – 7˚ BTDC @ idle
Idle speed	Engine at normal operating temperature		650 – 750 rpm
Cylinder head	Warpage		
	Cylinder block side	Maximum	0.05 mm (0.0020 in.)
	Manifold side	Maximum	0.10 mm (0.0039 in.)
	Valve seat		
	Refacing angle	Intake	30˚, 45˚, 60˚
		Exhaust	45˚, 60˚
	Contacting angle		45˚
	Contacting width		1.0 – 1.4 mm (0.039 – 0.055 in.)
	Cylinder head bolt outside diameter	STD	10.76 – 10.97 mm (0.4236 – 0.4319 in.)
		Minimum	10.40 mm (0.4094 in.)
Valve guide bushing	Inside diameter		6.010 – 6.030 mm (0.2366 – 0.2374 in.)
	Outside diameter (for repair part)	STD	11.000 – 11.027 mm (0.4331 – 0.4341 in.)
		O/S 0.05	11.050 – 11.077 mm (0.4350 – 0.4361 in.)
	Protrusion height		8.2 – 8.6 mm (0.323 – 0.339 in.)
	Replacing temperature (Cylinder head side)		80 – 100˚C (176 –212˚F)
Valve	Valve overall length	STD Intake	103.45 mm (4.0728 in.)
		Exhaust	103.60 mm (4.0787 in.)
		Minimum Intake	102.95 mm (4.0531 in.)
		Exhaust	103.10 mm (4.0590 in.)
	Valve face angle		44.5˚
	Stem diameter	Intake	5.970 – 5.985 mm (0.2350 – 0.2356 in.)
		Exhaust	5.965 – 5.980 mm (0.2348 – 0.2354 in.)
	Stem oil clearance	STD Intake	0.025 – 0.060 mm (0.0010 – 0.0024 in.)
		Exhaust	0.030 – 0.065 mm (0.0012 – 0.0026 in.)
		Maximum Intake	0.08 mm (0.0031 in.)
		Exhaust	0.10 mm (0.0039 in.)
	Margin thickness	STD	1.0 mm (0.039 in.)
		Minimum	0.5 mm (0.020 in.)

Valve spring	Deviation	Maximum	2.0 mm (0.079 in.)
	Installed tension	at 35.7 mm (1.406 in.)	177 – 204 N (18.0 – 20.8 kgf, 39.7 – 45.9 lbf)
Valve lifter	Lifter diameter		30.966 – 30.976 mm (1.1578 – 1.2195 in.)
	Lifter bore diameter		31.000 – 31.016 mm (1.2205 – 1.2211 in.)
	Oil clearance	STD	0.024 – 0.050 mm (0.0009 – 0.0020 in.)
		Maximum	0.07 mm (0.0028 in.)
Manifold	Warpage	Maximum Intake	0.20 mm (0.0078 in.)
		Exhaust	0.50 mm (0.0197 in.)
Air intake chamber	Warpage	Maximum	0.20 mm (0.0078 in.)
Camshaft	Thrust clearance	STD	0.040 – 0.095 mm (0.0016 – 0.0037 in.)
		Maximum	0.12 mm (0.0047 in.)
	Journal oil clearance	STD	0.025 – 0.062 mm (0.0010 – 0.0024 in.)
		Maximum	0.08 mm (0.0031 in.)
	Journal diameter		26.959 – 26.975 mm (1.0614 – 1.0620 in.)
	Circle runout	Maximum	0.06 mm (0.0024 in.)
	Cam lobe height	Intake	45.31 – 45.41 mm (1.7839 – 1.7878 in.)
		Exhaust	45.06 – 45.16 mm (1.7740 – 1.7779 in.)
	Camshaft gear backlash	STD	0.020 –0.200 mm (0.0008 – 0.0079 in.)
		Maximum	0.30 mm (0.0188 in.)
	Camshaft gear spring end free distance		22.5 – 22.9 mm (0.886– 0.902 in.)
Spark plug tube	Protrusion		47.0 mm (1.850 in.)
Chain and timing gear	Chain length at 16 links	Maximum (No.1)	147.5 mm (5.807 in.)
		(No.2)	123.6 mm (4.866 in.)
	Camshaft timing gear wear (w/ chain)	Minimum	113.8 mm (4.480 in.)
	Crankshaft timing gear wear (w/ chain)	Minimum	59.4 mm (2.339 in.)
	Balance shaft drive gear wear (w/ chain)	Minimum	75.9 mm (2.988 in.)
	No.2 crankshaft timing sprocket wear (w/ chain)	Minimum	96.7 mm (3.807 in.)
Chain tensioner slipper and vibration damper	Wear	Maximum	1.0 mm (0.039 in.)
Cylinder block	Cylinder head surface warpage	Maximum	0.05 mm (0.0020 in.)
	Cylinder bore diameter	STD	94.990 – 95.003 mm (3.7400 – 3.7403 in.)
		Maximum	95.06 mm (3.7425 in.)
	Main bearing bolt outside diameter	STD	10.76 – 10.97 mm (0.4236 – 0.4319 in.)
		Minimum	10.40 mm (0.4094 in.)
	Cylinder block main journal bore diameter		
		STD Mark 1	64.004 – 64.010 mm (2.5198 – 2.5201 in.)
		Mark 2	64.011 – 64.016 mm (2.5201 – 2.5203 in.)
		Mark 3	64.017 – 64.022 mm (2.5203 – 2.5205 in.)
		U/S 0.25	64.000 – 64.024 mm (2.5197 – 2.5206 in.)

Piston and piston ring	Piston diameter		
	2RZ–FE	STD	94.923 – 94.933 mm (3.7371 – 3.7375 in.)
		O/S 0.50	95.423 – 95.433 mm (3.7568 – 3.7572 in.)
	3RZ–FE	STD	94.933 – 94.943 mm (3.7375 – 3.7379 in.)
		O/S 0.50	95.433 – 95.443 mm (3.7572 – 3.7576 in.)
	Piston oil clearance		
	2RZ–FE		0.057 – 0.080 mm (0.0022 – 0.0031 in.)
	3RZ–FE		0.047 – 0.070 mm (0.0019 – 0.0028 in.)
	Piston ring groove clearance	No.1	0.020 – 0.070 mm (0.0008 – 0.0028 in.)
		No.2	0.030 – 0.070 mm (0.0012 – 0.0028 in.)
	Piston ring end gap	No.1	0.300 – 0.400 mm (0.0118 – 0.0157 in.)
		No.2	0.400 – 0.500 mm (0.0157 – 0.0197 in.)
	Piston pin installing temperature		80 – 90°C (176 – 194°F)
Connecting rod	Thrust clearance	STD	0.160 – 0.312 mm (0.0063 – 0.0123 in.)
		Maximum	0.35 mm (0.0138 in.)
	Connecting rod bearing center wall thickness		
		STD Mark 4	1.482 – 1.485 mm (0.0583 – 0.0585 in.)
		Mark 5	1.485 – 1.488 mm (0.0585 – 0.0586 in.)
		Mark 6	1.488 – 1.491 mm (0.0586 – 0.0587 in.)
		U/S 0.25	1.601 – 1.607 mm (0.0630 – 0.0633 in.)
	Connecting rod big end inside diameter		
		STD Mark 4	56.000 – 56.006 mm (2.2047 – 2.2050 in.)
		Mark 5	56.006 – 56.012 mm (2.2050 – 2.2052 in.)
		Mark 6	56.012 – 56.018 mm (2.2052 – 2.2054 in.)
		U/S 0.25	56.000 – 56.018 mm (2.2047 – 2.2054 in.)
	Connecting rod oil clearance	STD	0.030 – 0.055 mm (0.0012 – 0.0022 in.)
		U/S 0.25	0.031 – 0.071 mm (0.0012 – 0.0026 in.)
		Maximum	0.10 mm (0.0039 in.)
	Rod out–of–alignment		
	Maximum per 100 mm (3.94 in.)		0.05 mm (0.0020 in.)
	Rod twist Maximum per 100 mm (3.94 in.)		0.15 mm (0.0059 in.)
	Bushing inside diameter		24.008 – 24.017 mm (0.9452 – 0.9455 in.)
	Piston pin diameter		24.000 – 24.009 mm (0.9449 – 0.9452 in.)
	Piston pin oil clearance	STD	0.005 – 0.011 mm (0.0002 – 0.0004 in.)
		Maximum	0.015 mm (0.0006 in.)
	Connecting rod bolt outside diameter	STD	7.80 – 7.90 mm (0.3071 – 0.3110 in.)
		Minimum	7.60 mm (0.2992 in.)

Crankshaft	Thrust clearance	STD	0.020 – 0.220 mm (0.0008 – 0.0087 in.)
		Maximum	0.30 mm (0.0118 in.)
	Thrust washer thickness		2.440 – 2.490 mm (0.0961 – 0.0980 in.)
	Main journal oil clearance	STD No.3	0.030 – 0.055 mm (0.0012 – 0.0022 in.)
		Others	0.024 – 0.049 mm (0.0009 – 0.0019 in.)
		U/S 0.25 No.3	0.030 – 0.070 mm (0.0012 – 0.0028 in.)
		Others	0.025 – 0.065 mm (0.0010 – 0.0026 in.)
		Maximum	0.10 mm (0.0039 in.)
	Main journal diameter	STD No.3	59.981 – 59.994 mm (2.2615 – 2.3620 in.)
		Others	59.987 – 60.000 mm (2.3617 – 2.3622 in.)
		U/S 0.25 No.3	59.740 – 59.750 mm (2.3520 – 2.3524 in.)
		Others	59.745 – 59.755 mm (2.3522 – 2.3526 in.)
	Main bearing center wall thickness		
		STD Mark 1	1.987 – 1.990 mm (0.0782 – 0.0783 in.)
		Mark 2	1.991 – 1.993 mm (0.0784 – 0.0785 in.)
		Mark 3	1.994 – 1.996 mm (0.0785 – 0.0786 in.)
		U/S 0.25	2.106 – 2.112 mm (0.0829 – 0.0831 in.)
	Crank pin diameter	STD	52.987 – 53.000 mm (2.0861 – 2.0866 in.)
		U/S 0.25	52.745 – 52.755 mm (2.0766 – 2.0770 in.)
	Circle runout	Maximum	0.03 mm (0.0012 in.)
	Main journal taper and out–of–round	Maximum	0.005 mm (0.0002 in.)
	Crank pin taper and out–of–round	Maximum	0.005 mm (0.0002 in.)
Balance shaft	Thrust clearance	STD	0.07 – 0.13 mm (0.0027 – 0.0051 in.)
		Maximum	0.20 mm (0.0079 in.)
	Bearing inside diameter	No.1	38.025 – 38.045 mm (1.4970 – 1.4978 in.)
		No.2	37.525 – 37.545 mm (1.4774 – 1.4781 in.)
	Journal diameter	No.1	37.969 – 37.985 mm (1.4948 – 1.4955 in.)
		No.2	37.449 – 37.465 mm (1.4744 – 1.4750 in.)
	Journal oil clearance	STD No.1	0.040 – 0.076 mm (0.0016 – 0.0031 in.)
		No.2	0.060 – 0.096 mm (0.0024 – 0.0038 in.)
		Maximum	0.15 mm (0.0059 in.)

SS041–04

TORQUE SPECIFICATION

Part tightened		N·m	kgf·cm	ft·lbf
Spark plug x Cylinder head		19	200	14
Cylinder head x Cylinder block	1st	39	400	29
	2nd	Turn 90°	Turn 90°	Turn 90°
	3rd	Turn 90°	Turn 90°	Turn 90°
Cylinder head x Timing chain cover		21	210	15
Camshaft bearing cap x Cylinder head		15.5	160	12
Camshaft timing gear x Intake camshaft		73.5	750	54
Distributor gear x Exhaust camshaft		46	470	34
No.1 chain tensioner x Cylinder head		21	210	15
Engine hanger x Cylinder head		42	420	30
Cylinder head rear cover x Cylinder head		13.5	135	10
Water outlet x Cylinder head		20	200	14
Exhaust manifold x Cylinder head		49	500	36
Heat insulator x Exhaust manifold		5.5	55	48 in.·lbf
Intake manifold x Cylinder head		29	300	22
Fuel inlet pipe x Fuel filter		29	300	22
Air intake chamber x Intake manifold		21	210	15
Fuel inlet pipe x Delivery pipe		29	300	22
Intake chamber stay x Air intake chamber		20	200	15
Intake chamber stay x LH engine mounting bracket		20	200	15
EGR pipe x EGR valve		19	195	14
EGR pipe x Exhaust manifold		20	200	15
EGR pipe x Cylinder head		18	185	13
PS pump bracket x Cylinder head		20	200	15
PS pump bracket x PS pump		58	590	43
PS pump x PS pump pulley		43	440	32
Drive belt idler pulley for PS pump x Cylinder head		20	200	14
Oil dipstick guide x Cylinder head		20	200	15
Intake air connector x Cylinder head		18	185	13
Balance shaft drive gear x Balance shaft		25	250	18
No.2 chain tensioner x Cylinder block		18	185	13
No.3 vibration damper x Cylinder block		18	185	13
No.2 vibration damper x Cylinder block		27	270	20
Oil jet x Cylinder block		18	185	13
No.1 vibration damper x Cylinder block		29	300	22
No.1 timing chain tensioner slipper x Cylinder block		27	270	20
Timing chain cover x Cylinder block	12 mm head bolt A	20	200	14
	bolt B	24.5	250	18
	14 mm head bolt	44	440	32
	Nut	20	200	14
Timing chain cover mounting bolt		18	185	13
Water bypass pipe mounting nut		20	200	14
Crankshaft pulley x Crankshaft		260	2,650	193
No.2 crankshaft pulley x Crankshaft pulley		25	250	18

No.3 crankshaft pulley x Crankshaft pulley	25	250	18
Oil strainer x Cylinder block	18	185	13
Part tightened	N·m	kgf·cm	ft·lbf
Oil pan x Cylinder block	12.5	130	9
Stiffener plate x Cylinder block	37	380	27
Stiffener plate x Transmission	37	380	27
Crankshaft position sensor x Timing chain cover	8.5	85	74 in.·lbf
Generator bracket x Cylinder block	74.5	760	55
Generator bracket x Timing chain cover	18	185	13
Generator adjusting bar x Timing chain cover	63.5	650	47
A/C compressor bracket x Cylinder block	44	440	32
A/C compressor x A/C compressor bracket	25	250	18
Connecting rod cap x Connecting rod 1st 2nd	45 Turn 90°	460 Turn 90°	33 Turn 90°
Main bearing cap x Cylinder block 1st 2nd	39 Turn 90°	400 Turn 90°	29 Turn 90°
No.1 balance shaft x Timing gear	36	365	26
No.2 balance shaft x Timing sprocket	36	365	26
Balance shaft x Cylinder block	18	185	13
Rear oil seal retainer x Cylinder block	13.5	135	9.7
Engine mounting bracket x Cylinder block	52	520	38
Engine coolant drain plug x Cylinder block	24.5	250	18
Oil filter bracket union x Cylinder block	25	250	18
Oil filter bracket (2RZ–FE) x Cylinder block Nut Union bolt	12 68.5	120 700	8.9 51
Oil filter bracket (3RZ–FE) x Cylinder block	28	290	21
Water bypass pipe x Cylinder block	20	200	14
Knock sensor x Cylinder block	37	380	27
Fuel filter x Cylinder block	20	200	14
Rear end plate x Cylinder block	18	185	13
Rear end plate x Water bypass pipe	20	200	14
Flywheel (2RZ–FE) x Crankshaft	88	900	65
Flywheel (3RZ–FE) x Crankshaft 1st 2nd	26.5 Turn 90°	270 Turn 90°	19 Turn 90°
Drive plate x Crankshaft	74	750	54
Engine rear mounting bracket x Front crossmember	25	260	19
Engine rear mounting bracket x Engine rear mounting insulator	18	183	13
Engine front mounting insulator x Frame	38	387	28
Clutch release cylinder bracket x Transmission	39	400	29
Clutch release cylinder x Transmission	13	130	9
No.1 exhaust pipe with TWC x Exhaust manifold	62	630	46
Exhaust support bracket x Transmission	44	450	33
No.1 exhaust pipe with TWC x No.2 exhaust pipe with TWC	48	490	35
No.2 exhaust pipe with TWC x Tail pipe	48	490	35
A/F sensor (Bank 1 sensor 1) x No.1 exhaust pipe with TWC	20	200	14

Heated oxygen sensor (Bank 1 sensor 2) x Tail pipe	20	200	14
Exhaust pipe support x Tail pipe	19	190	26

ENGINE MECHANICAL (5VZ–FE)

SS00O–06

SERVICE DATA

Compression pressure		at 250 rpm STD	1,200 kPa (12.2 kgf/cm^2, 174 psi) or more
		Minimum	1,000 kPa (10.2 kgf/cm^2, 145 psi)
	Difference of pressure between each cylinder		100 kPa (1.0 kgf/cm^2, 15 psi) or less
Valve clearance		at cold Intake	0.13 – 0.23 mm (0.006 – 0.009 in.)
		Exhaust	0.27 – 0.37 mm (0.011 – 0.014 in.)
	Adjusting shim for repair part	Mark 2.500	2.500 mm (0.0984 in.)
		Mark 2.550	2.550 mm (0.1004 in.)
		Mark 2.600	2.600 mm (0.1024 in.)
		Mark 2.650	2.650 mm (0.1043 in.)
		Mark 2.700	2.700 mm (0.1063 in.)
		Mark 2.750	2.750 mm (0.1083 in.)
		Mark 2.800	2.800 mm (0.1102 in.)
		Mark 2.850	2.850 mm (0.1122 in.)
		Mark 2.900	2.900 mm (0.1142 in.)
		Mark 2.950	2.950 mm (0.1161 in.)
		Mark 3.000	3.000 mm (0.1181 in.)
		Mark 3.050	3.050 mm (0.1201 in.)
		Mark 3.100	3.100 mm (0.1220 in.)
		Mark 3.150	3.150 mm (0.1240 in.)
		Mark 3.200	3.200 mm (0.1260 in.)
		Mark 3.250	3.250 mm (0.1280 in.)
		Mark 3.300	3.300 mm (0.1299 in.)
Ignition timing	w/ Terminals TE1 and E1 connected of DLC1		8 – 12˚ BTDC @ idle
Idle speed	–		700 ± 50 rpm
Intake manifold vacuum		at idle speed	60 kPa (450 mmHg, 17.7 in.Hg) or more
Timing belt tensioner	Protrusion from housing side		10.0 – 10.8 mm (0.394 – 0.425 in.)
Cylinder head	Warpage	Maximum	0.10 mm (0.039 in.)
	Valve seat		
	Refacing angle		30˚, 45˚, 60˚
	Contacting angle		45˚
	Contacting width		1.0 – 1.4 mm (0.039 – 0.055 in.)
	Valve guide bushing bore diameter	STD	10.985 – 11.027 mm (0.4325 – 0.4341 in.)
		O/S 0.05	11.050 – 11.077 mm (0.4350 – 0.4361 in.)
Valve guide bushing	Inside diameter		6.010 – 6.030 mm (0.2366 – 0.2374 in.)
	Outside diameter for repair part	STD	11.033 – 11.044 mm (0.4344 – 0.4348 in.)
		O/S 0.05	11.083 – 11.094 mm (0.4363 – 0.4368 in.)
Valve	Valve overall length	STD Intake	95.15 mm (3.7461 in.)
		Exhaust	94.90 mm (3.7362 in.)
		Minimum Intake	94.60 mm (3.7244 in.)
		Exhaust	94.40 mm (3.7165 in.)
	Valve face angle		44.5˚
	Stem diameter	Intake	5.970 – 5.985 mm (0.2350 – 0.2356 in.)
		Exhaust	5.965 – 5.980 mm (0.2348 – 0.2354 in.)
	Stem oil clearance	STD Intake	0.025 – 0.060 mm (0.0010 – 0.0024 in.)
		Exhaust	0.030 – 0.065 mm (0.0012 – 0.0026 in.)
		Maximum Intake	0.08 mm (0.0031 in.)
		Exhaust	0.10 mm (0.0039 in.)
	Margin thickness	STD	1.0 mm (0.039 in.)
		Minimum	0.5 mm (0.020 in.)

Valve spring	Deviation	Maximum	2.0 mm (0.079 in.)
	Free length		44.78 mm (1.7630 in.)
	Installed tension	at 33.3 mm (1.311 in.)	186 – 206 N (19.0 – 21.0 kgf, 41.9 – 46.3 lbf)
Valve lifter	Lifter diameter		30.966 – 30.976 mm (1.2191 – 2.2195 in.)
	Lifter bore diameter		31.000 – 31.018 mm (1.2205 – 1.2212 in.)
	Oil clearance	STD	0.024 – 0.052 mm (0.0009 – 0.0020 in.)
		Maximum	0.08 mm (0.0031 in.)
Camshaft	Thrust clearance	STD	0.033 – 0.080 mm (0.0013 – 0.0031 in.)
		Maximum	0.12 mm (0.0047 in.)
	Journal oil clearance	STD	0.035 – 0.072 mm (0.0014 – 0.0028 in.)
		Maximum	0.10 mm (0.0039 in.)
	Journal diameter		26.949 – 26.965 mm (1.0610 – 1.0616 in.)
	Circle runout	Maximum	0.06 mm (0.0024 in.)
	Cam lobe height	STD Intake	42.31 – 42.41 mm (1.6657 – 1.6697 in.)
		Exhaust	41.96 – 42.06 mm (1.6520 – 1.6559 in.)
		Minimum Intake	42.16 mm (1.6598 in.)
		Exhaust	41.81 mm (1.6461 in.)
	Camshaft gear backlash	STD	0.020 – 0.200 mm (0.0008 – 0.0079 in.)
		Maximum	0.30 mm (0.0188 in.)
	Camshaft gear spring end free distance		18.2 – 18.8 mm (0.712 – 0.740 in.)
Air intake chamber	Warpage	Maximum	0.10 mm (0.0039 in.)
Intake air connector	Warpage	Maximum	0.10 mm (0.0039 in.)
Intake manifold	Warpage	Maximum	0.10 mm (0.0039 in.)
Exhaust manifold	Warpage	Maximum	1.00 mm (0.0394 in.)
Cylinder block	Cylinder head surface warpage	Maximum	0.05 mm (0.0020 in.)
	Cylinder bore diameter	STD Mark 1	93.500 – 93.510 mm (3.6811 – 3.6815 in.)
		Mark 2	93.510 – 93.520 mm (3.6815 – 3.6819 in.)
		Mark 3	93.520 – 93.530 mm (3.6819 – 3.6823 in.)
		Maximum STD	93.730 mm (3.6902 in.)
		O/S 0.50	94.230 mm (3.7098 in.)
Piston and piston ring	Piston diameter	STD Mark 1	93.356 – 93.366 mm (3.6754 – 3.6758 in.)
		Mark 2	93.367 – 93.376 mm (3.6759 – 3.6762 in.)
		Mark 3	93.377 – 93.386 mm (3.6763 – 3.6766 in.)
		O/S 0.50	93.856 – 93.886 mm (3.6951 – 3.6963 in.)
	Piston oil clearance	STD	0.134 – 0.154 mm (0.0053 – 0.0060 in.)
		Maximum	0.174 mm (0.0069 in.)
	Piston ring groove clearance	No.1	0.040 – 0.080 mm (0.0016 – 0.0031 in.)
		No.2	0.030 – 0.070 mm (0.0012 – 0.0028 in.)
	Piston ring end gap	STD No.1	0.300 – 0.500 mm (0.0118 – 0.0197 in.)
		No.2	0.400 – 0.600 mm (0.0157 – 0.0236 in.)
		Oil	0.150 – 0.550 mm (0.0059 – 0.0217 in.)
		Maximum No.1	1.100 mm (0.0433 in.)
		No.2	1.200 mm (0.0472 in.)
		Oil	1.150 mm (0.0453 in.)

Connecting rod	Thrust clearance	STD	0.150 – 0.330 mm (0.0059 – 0.0130 in.)
		Maximum	0.380 mm (0.0150 in.)
	Connecting rod bearing center wall thickness		
	Reference	Mark 1	1.484 – 1.488 mm (0.0584 – 0.0586 in.)
		Mark 2	1.488 – 1.492 mm (0.0586 – 0.0587 in.)
		Mark 3	1.492 – 1.496 mm (0.0587 – 0.0589 in.)
	Connecting rod oil clearance	STD	0.024 – 0.053 mm (0.0009 – 0.0021 in.)
		O/S 0.25	0.023 – 0.069 mm (0.0009 – 0.0027 in.)
		Maximum	0.08 mm (0.0031 in.)
	Rod bend	Maximum per 100 mm (3.94 in.)	0.05 mm (0.0020 in.)
	Rod twist	Maximum per 100 mm (3.94 in.)	0.15 mm (0.0059 in.)
	Bushing inside diameter		22.005 – 22.017 mm (0.8663 – 0.8668 in.)
	Piston pin diameter		21.997 – 22.009 mm (0.8660 – 0.8665 in.)
	Bushing oil clearance	STD	0.005 – 0.011 mm (0.0002 – 0.0004 in)
		Maximum	0.05 mm (0.0020 in.)
	Connecting rod bolt outer diameter	STD	7.860 – 8.000 mm (0.3094 – 0.3150 in.)
		Minimum	7.600 mm (0.2992 in.)
Crankshaft	Thrust clearance	STD	0.020 – 0.220 mm (0.0008 – 0.0087 in.)
		Maximum	0.300 mm (0.0118 in.)
	Thrust washer thickness		2.440 – 2.490 mm (0.0961 – 0.0980 in.)
	Main journal oil clearance	No.1 STD	0.020 – 0.038 mm (0.0008 – 0.0015 in.)
		U/S 0.25	0.019 – 0.059 mm (0.0007 – 0.0023 in.)
		Others STD	0.024 – 0.042 mm (0.0009 – 0.0017 in.)
		U/S 0.25	0.023 – 0.063 mm (0.0009 – 0.0025 in.)
		Maximum	0.08 mm (0.0031 in.)
	Main journal diameter	STD	63.985 – 64.000 mm (2.5191 – 2.5197 in.)
		U/S 0.25	63.745 – 63.755 mm (2.5096 – 2.5100 in.)
	Main bearing center wall thickness		
	Reference	No.1 Mark 1	1.991 – 1.994 mm (0.0784 – 0.0785 in.)
		Mark 2	1.994 – 1.997 mm (0.0785 – 0.0786 in.)
		Mark 3	1.997 – 2.000 mm (0.0786 – 0.0787 in.)
		Mark 4	2.000 – 2.003 mm (0.0787 – 0.0789 in.)
		Mark 5	2.003 – 2.006 mm (0.0789 – 0.0790 in.)
		Others Mark 1	1.989 – 1.992 mm (0.0783 – 0.0784 in.)
		Mark 2	1.992 – 1.995 mm (0.0784 – 0.0785 in.)
		Mark 3	1.995 – 1.998 mm (0.0785 – 0.0787 in.)
		Mark 4	1.998 – 2.001 mm (0.0787 – 0.0788 in.)
		Mark 5	2.001 – 2.004 mm (0.0788 – 0.0789 in.)
	Crank pin diameter	STD	54.987 – 55.000 mm (2.1648 – 2.1654 in.)
		U/S 0.25	54.745 – 54.755 mm (2.1553 – 2.1557 in.)
	Circle runout	Maximum	0.06 mm (0.0024 in.)
	Main journal taper and out–of–round	Maximum	0.02 mm (0.0008 in.)
	Crank pin taper and out–of–round	Maximum	0.02 mm (0.0008 in.)

SS00P–09

TORQUE SPECIFICATION

Part tightened		N·m	kgf·cm	ft·lbf
No.1 idler pulley x Oil pump		35	350	26
No.2 idler pulley x No.2 idler pulley bracket		40	400	30
No.1 timing belt cover x Oil pump		9	90	80 in.·lbf
Crankshaft pulley x Crankshaft		250	2,500	184
Camshaft timing pulley x Camshaft		295	3,000	217
Timing belt tensioner x Oil pump		27	280	20
No.2 timing belt cover x No.3 timing belt cover		9	90	80 in.·lbf
Oil dipstick guide x Generator bracket		8	80	71 in.·lbf
Fluid coupling x Fan bracket		5.4	54	48 in.·lbf
A/C compressor bracket x Cylinder block		47	479	35
A/C compressor x A/C compressor bracket		25	250	18
PS pump x PS pump bracket		43	440	31
Camshaft bearing cap x Cylinder head		16	160	12
Rear plate x Cylinder head		8	80	71 in.·lbf
Cylinder head x Cylinder block	12 pointed head 1st 2nd 3rd Recessed head	34 Turn 90° Turn 90° 18	350 Turn 90° Turn 90° 185	25 Turn 90° Turn 90° 13
Cylinder head cover x Cylinder head		6	60	53 in.·lbf
Exhaust manifold x Cylinder head		40	400	30
Exhaust manifold heat insulator x Exhaust manifold		8	80	71 in.·lbf
Exhaust crossover pipe x Exhaust manifold		45	450	33
Generator bracket x LH cylinder head		18.5	185	14
PS pump bracket x RH cylinder head		18.5	185	14
Intake manifold, Intake manifold stay x Cylinder head		18	180	13
No.3 timing belt cover x Cylinder head		9	90	80 in.·lbf
Camshaft position sensor x RH cylinder head		8	80	71 in.·lbf
Intake air connector x Intake manifold		18	180	13
Air intake chamber x Intake air connector		18	180	13
Air intake chamber stay x LH cylinder head, Air intake chamber		40	400	30
Engine hanger No.2 x RH cylinder head		40	400	30
Frame crossmember x Engine rear mounting bracket		58	590	43
Engine rear mounting bracket x Engine rear mounting insulator		18	183	13
Engine front mounting insulator x Frame		38	387	28
Connecting rod cap x Connecting rod	1st 2nd	25 Turn 90°	250 Turn 90°	18 Turn 90°
Main bearing cap x Cylinder block	1st 2nd	61 Turn 90°	625 Turn 90°	45 Turn 90°
Rear oil seal retainer x Cylinder block		8	80	71 in.·lbf
Engine coolant drain cock x Cylinder block		39	400	29
Engine mounting bracket x Cylinder block		44	440	32
Oil filter union x Cylinder block		25	250	18
Oil pressure switch x Cylinder block		15	150	11
Generator adjusting bar x Cylinder block		42	420	31

No.2 idler pulley bracket x Cylinder block	38	380	28
Water bypass pipe x Cylinder block	8.5	85	75 in.·lbf
Rear end plate x Cylinder block	7.5	75	66 in.·lbf
Drive plate x Crankshaft	83	850	61
Flywheel x Crankshaft	85	850	63
No.1 exhaust pipe with TWC x Crossover pipe (2WD, 4WD)	62	630	46
No.1 exhaust pipe with TWC x No.2 exhaust pipe with TWC (2WD, 4WD)	48	490	35
No.2 exhaust pipe with TWC x Tail pipe (2WD, 4WD)	48	490	35
A/F sensor (bank 1 sensor 1) x No.1 exhaust pipe with TWC (2WD, 4WD)	20	200	14
Heated oxygen sensor (bank 1 sensor 2) x Tail pipe	20	200	14

IGNITION (2RZ–FE, 3RZ–FE)

SS049–04

SERVICE DATA

Spark plug	Recommended spark plug Recommended spark plug Correct electrode gap	DENSO made NGK made	K16R–U11 BKR5EYA–U 1.1 mm (0.043 in.)
Camshaft position sensor	Resistance	at cold at hot	835 – 1,400 Ω 1,060 – 1,645 Ω
Crankshaft position sensor	Resistance	at cold NE+ – NE– at hot NE+ – NE–	1,630 – 2,740 Ω 2,065 – 3,225 Ω

SS04A–01

TORQUE SPECIFICATION

Part tightened	N·m	kgf·cm	ft·lbf
Spark plug x Cylinder head	20	200	14
Ignition coil x Cylinder head	10	100	7
Camshaft position sensor x Cylinder head	5.4	55	48 in.·lbf
Crankshaft position sensor x Oil pump	8.5	85	74 in.·lbf

IGNITION (5VZ–FE)

SS016–01

SERVICE DATA

High–tension cord	Resistance	Maximum	25 kΩ per cord
Spark plug	Recommended spark plug	ND	K16TR11
		NGK	BKR5EKB–11
	Correct electrode gap		1.1 mm (0.043 in.)
Ignition coil	Primary coil resistance	Cold	0.67 – 1.05 Ω
		Hot	0.85 – 1.23 Ω
	Secondary coil resistance	Cold	9.3 –16.0 kΩ
		Hot	11.7 – 18.8 kΩ
Camshaft position sensor	Resistance	Cold	835 – 1,400 Ω
		Hot	1,060 – 1,645 Ω
Crankshaft position sensor	Resistance	Cold	1,630 – 2,740 Ω
		Hot	2,065 – 3,225 Ω

SS017–01

TORQUE SPECIFICATION

Part tightened	N·m	kgf·cm	ft·lbf
Spark plug x Cylinder head	18	180	13
Ignition coil x Cylinder head	7.8	80	69 in.·lbf
Camshaft position sensor x Cylinder head	7.8	80	69 in.·lbf
Crankshaft position sensor x Oil pump	7.8	80	69 in.·lbf

LUBRICATION (2RZ–FE, 3RZ–FE)

SS047–01

SERVICE DATA

Oil pressure	Normal operating temperature	at idle speed	29 kPa (0.3 kgf/cm^2, 4.3 psi) or more
		at 3,000 rpm	245 – 490 kPa (2.5 – 5.0 kgf/cm^2, 36 – 71 psi)
Oil pump	Body clearance	STD	0.100 – 0.175 mm (0.0039 – 0.0069 in.)
		Maximum	0.30 mm (0.0118 in.)
	Tip clearance	STD	0.110 – 0.240 mm (0.0043 – 0.0094 in.)
		Maximum	0.25 mm (0.0098 in.)
	Side clearance	STD	0.030 – 0.090 mm (0.0012 – 0.0035 in.)
		Maximum	0.15 mm (0.0059 in.)

SS048–01

TORQUE SPECIFICATION

Part tightened	N·m	kgf·cm	ft·lbf
Oil pan x Drain plug	37	375	27

LUBRICATION (5VZ–FE)

SS012–01

SERVICE DATA

Oil pressure	Normal operating temperature	at idle speed	29 kPa (0.3 kgf/cm^2, 4.3 psi) or more
		at 3,000 rpm	245 – 520 kPa (2.5 – 5.3 kgf/cm^2, 36 – 75 psi)
Oil pump	Body clearance	STD	0.10 – 0.18 mm (0.0039 – 0.0069 in.)
		Maximum	0.30 mm (0.0118 in.)
	Tip clearance	STD	0.11 – 0.24 mm (0.0043 – 0.0094 in.)
		Maximum	0.35 mm (0.0138 in.)
	Side clearance	STD	0.03 – 0.09 mm (0.0012 – 0.0035 in.)
		Maximum	0.15 mm (0.0059 in.)

SS013–01

TORQUE SPECIFICATION

Part tightened		N·m	kgf·cm	ft·lbf
Oil pressure switch x Cylinder block		15	150	11
Oil pump x Oil pump body cover		10	105	8
Oil pump x Cylinder block	A	20	200	15
	B	42	420	31
Oil strainer x Cylinder block		7.5	76	66 in.·lbf
Oil pan x Cylinder block		7.6	78	67 in.·lbf
Oil cooler x Cylinder block		59	600	43

MANUAL TRANSMISSION (R150, R150F)

SS05E–04

SERVICE DATA

Output shaft 1st gear journal diameter	Min.	38.979 mm (1.53446 in.)
Output shaft 2nd gear journal diameter	Min.	46.984 mm (1.8498 in.)
Output shaft 3rd gear journal diameter	Min.	37.984 mm (1.4954 in.)
Output shaft flange thickness	Min.	4.80 mm (0.1890 in.)
Output shaft runout	Max.	0.03 mm (0.0012 in.)
Gear thrust clearance 1st	STD	0.20–0.45 mm (0.0079–0.0177 in.)
	Max.	0.45 mm (0.0177 in.)
Gear thrust clearance 2nd and 3rd	STD	0.10–0.25 mm (0.0039–0.0098 in.)
	Max.	0.25 mm (0.0098 in.)
Gear radial clearance 1st	STD	0.020–0.073 mm (0.0008–0.0029 in.)
	Max.	0.073 mm (0.0029 in.)
Gear radial clearance 2nd and 3rd	STD	0.015–0.068 mm (0.0006–0.0027 in.)
	Max.	0.068 mm (0.0027 in.)
Shift fork to hub sleeve clearance		
Reverse gear	Max.	0.41 mm (0.016 in.)
Hub sleeve No. 2	Max.	0.35 mm (0.014 in.)
Synchronizer ring to 3rd gear clearance	Min.	0.75 mm (0.030 in.)
Synchronizer ring to 1st and 2nd gear clearance	Min.	0.65 mm (0.026 in.)
Input shaft snap ring thickness		
	Mark A	2.10–2.15 mm (0.0827–0.0846 in.)
	Mark B	2.15–2.20 mm (0.0846–0.0866 in.)
	Mark C	2.20–2.25 mm (0.0866–0.0886 in.)
	Mark D	2.25–2.30 mm (0.0886–0.0906 in.)
	Mark E	2.30–2.35 mm (0.0906–0.0925 in.)
	Mark F	2.35–2.40 mm (0.0925–0.0945 in.)
	Mark G	2.40–2.45 mm (0.0945–0.0965 in.)
Output shaft snap ring thickness		
Clutch hub No.1	Mark A	2.30–2.35 mm (0.0906–0.0925 in.)
	Mark B	2.35–2.40 mm (0.0925–0.0945 in.)
	Mark C	2.40–2.45 mm (0.0945–0.0965 in.)
	Mark D	2.45–2.50 mm (0.0965–0.0984 in.)
	Mark E	2.50–2.55 mm (0.0984–0.1004 in.)
	Mark F	2.55–2.60 mm (0.1004–0.1024 in.)
	Mark G	2.60–2.65 mm (0.1024–0.1043 in.)
Output shaft snap ring thickness		
Clutch hub No.2	Mark A	1.80–1.85 mm (0.0709–0.0728 in.)
	Mark B	1.85–1.90 mm (0.0728–0.0748 in.)
	Mark C	1.90–1.95 mm (0.0748–0.0768 in.)
	Mark D	1.95–2.00 mm (0.0768–0.0787 in.)
	Mark E	2.00–2.05 mm (0.0787–0.0807 in.)
	Mark F	2.05–2.10 mm (0.0807–0.0827 in.)
	Mark G	2.10–2.15 mm (0.0827–0.0846 in.)

Output shaft snap ring thickness		
Rear	Mark A	2.65–2.70 mm (0.1043–0.1063 in.)
	Mark B	2.70–2.75 mm (0.1063–0.1083 in.)
	Mark C	2.75–2.80 mm (0.1083–0.1102 in.)
	Mark D	2.80–2.85 mm (0.1102–0.1122 in.)
	Mark E	2.85–2.90 mm (0.1122–0.1142 in.)
	Mark F	2.90–2.95 mm (0.1142–0.1161 in.)
	Mark G	2.95–3.00 mm (0.1161–0.1181 in.)
	Mark H	3.00–3.05 mm (0.1181–0.1201 in.)
	Mark J	3.05–3.10 mm (0.1201–0.1220 in.)
	Mark K	3.10–3.15 mm (0.1220–0.1240 in.)
	Mark L	3.15–3.20 mm (0.1240–0.1260 in.)
	Mark M	3.20–3.25 mm (0.1260–0.1280 in.)
	Mark N	3.25–3.30 mm (0.1280–0.1299 in.)
	Mark P	3.30–3.35 mm (0.1299–0.1319 in.)
	Mark Q	3.35–3.40 mm (0.1319–0.1339 in.)
	Mark R	3.40–3.45 mm (0.1339–0.1358 in.)
	Mark S	3.45–3.50 mm (0.1358–0.1378 in.)
Counter gear roller bearing journal diameter	Min.	27.860 mm (1.0968 in.)
Counter 5th gear thrust clearance	STD	0.10–0.35 mm (0.0039–0.0138 in.)
	Max.	0.40 mm (0.0157 in.)
Counter 5th radial clearance	STD	0.015–0.068 mm (0.0006–0.0027 in.)
	Max.	0.160 mm (0.0063 in.)
Reverse idler gear radial clearance	STD	0.040–0.082 mm (0.0016–0.0032 in.)
	Max.	0.130 mm (0.0051 in.)
Reverse idler gear to shift arm clearance	STD	0.05–0.35 mm (0.0020–0.0138 in.)
	Max.	0.50 mm (0.0197 in.)
Counter gear snap ring thickness		
Front	Mark A	2.00–2.05 mm (0.0787–0.0807 in.)
	Mark B	2.05–2.10 mm (0.0807–0.0827 in.)
	Mark C	2.10–2.15 mm (0.0827–0.0846 in.)
	Mark D	2.15–2.20 mm (0.0846–0.0866 in.)
	Mark E	2.20–2.25 mm (0.0866–0.0886 in.)
	Mark F	2.25–2.30 mm (0.0886–0.0906 in.)
Counter gear snap ring thickness		
Rear	Mark A	2.80–2.85 mm (0.1102–0.1122 in.)
	Mark B	2.85–2.90 mm (0.1122–0.1142 in.)
	Mark C	2.90–2.95 mm (0.1142–0.1161 in.)
	Mark D	2.95–3.00 mm (0.1161–0.1181 in.)
	Mark E	3.00–3.05 mm (0.1181–0.1201 in.)
	Mark F	3.05–3.10 mm (0.1201–0.1220 in.)
	Mark G	3.10–3.15 mm (0.1220–0.1240 in.)
Oil seal drive in depth		
Front bearing retainer (from retainer end)		11.7 ± 0.5 mm (0.461 ± 0.020 in.)
Extension housing		0 ± 0.5 mm (0 ± 0.020 in.)
Transfer adaptor		45.6 ± 0.5 mm (1.795 ± 0.020 in.)

SS05F–01

TORQUE SPECIFICATION

Part tightened	N·m	kgf·cm	ft·lbf
Transmission x Engine	72	730	53
Starter x Transmission	39	400	29
Engine rear mounting x Transmission	65	660	48
Rear end plate x Transmission	18	185	13
Clutch release cylinder x Clutch housing	12	120	9
Clutch release cylinder line x Clutch housing (2WD)	12	120	9
Front exhaust pipe x TWC	48	490	35
Front exhaust pipe support bracket	44	450	33
Front exhaust pipe x Exhaust manifold	62	630	46
Engine rear mounting bracket x Frame (2WD)	58	590	43
Engine rear mounting bracket x Engine rear mounting (2WD)	18	185	13
Crossmember x Engine rear mounting (4WD)	18	185	13
Crossmember x Frame (4WD)	65	660	48
Transmission x Transfer (4WD)	24	240	17
Reverse shift arm bracket set bolt	18	185	13
Rear bearing retainer x Intermediate plate	18	185	13
Shift fork x Shift fork shaft	20	200	14
Straight screw plug	19	190	14
Front bearing retainer x Transmission case	17	170	12
Transmission case x Transfer adaptor	37	380	27
Transmission case x Extension housing	37	380	27
Shift lever housing set bolt	38	390	28
Clutch housing x Transmission case	36	370	27
Oil receiver pipe x Extension housing	11	115	8
Back–up light switch	44	450	32
Restrict pin	37	380	27
Control shift lever retainer x Transfer adaptor	18	185	13
Control shift lever retainer x Extension housing	18	185	13
Filler and drain plug	37	380	27
Vehicle speed sensor set bolt (2WD)	11	115	8

MANUAL TRANSMISSION (W59)

SS059–01

SERVICE DATA

Output shaft 2nd gear journal diameter	Min.	42.975 mm (1.6919 in.)
Output shaft 3rd gear journal diameter	Min.	31.969 mm (1.2586 in.)
Output shaft flange thickness	Min.	5.60 mm (0.2205 in.)
Output shaft runout	Max.	0.06 mm (0.0024 in.)
1st gear inner race flange thickness	Min.	4.78 mm (0.1881 in.)
1st gear inner race outer diameter	Min.	42.975 mm (1.6919 in.)
Counter gear bearing journal diameter	Min.	29.950 mm (1.1791 in.)
Counter 5th gear journal diameter	Min.	26.975 mm (1.0620 in.)
1st, 2nd and 3rd gear thrust clearance	STD Max.	0.10 – 0.25 mm (0.0039 – 0.0098 in.) 0.30 mm (0.0118 in.)
Counter 5th gear thrust clearance	STD Max.	0.10 – 0.41 mm (0.0039 – 0.0161 in.) 0.46 mm (0.0181 in.)
1st, 2nd and counter 5th gear radial clearance	STD Max.	0.009 – 0.060 mm (0.0004 – 0.0024 in.) 0.150 mm (0.0059 in.)
3rd gear radial clearance	STD Max.	0.015 – 0.066 mm (0.0006 – 0.0026 in.) 0.200 mm (0.0079 in.)
Reverse idler gear radial clearance	STD Max.	0.041 – 0.074 mm (0.0016 – 0.0029 in.) 0.194 mm (0.0076 in.)
Reverse idler gear to shift arm shoe clearance	STD Max.	0.20 – 0.41 mm (0.0080 – 0.0161 in.) 0.90 mm (0.0354 in.)
Shift fork to hub sleeve clearance	Max.	1.0 mm (0.039 in.)
Synchronizer ring to 1st and 4th gear clearance	Min.	0.5 mm (0.020 in.)
Synchronizer ring to 2nd and 3rd gear clearance	Min.	0.7 mm (0.028 in.)
Input shaft snap ring thickness	Mark 1 2 3 4 5 11 12	2.05 – 2.10 mm (0.0807 – 0.0827 in.) 2.10 – 2.15 mm (0.0827 – 0.0846 in.) 2.15 – 2.20 mm (0.0846 – 0.0866 in.) 2.20 – 2.25 mm (0.0866 – 0.0886 in.) 2.25 – 2.30 mm (0.0886 – 0.0906 in.) 2.30 – 2.35 mm (0.0906 – 0.0925 in.) 2.35 – 2.40 mm (0.0925 – 0.0945 in.)
Output shaft snap ring thickness		
No. 2 clutch hub	Mark C–1 D 11 12 13 14 15	1.75 – 1.80 mm (0.0689 – 0.0709 in.) 1.80 – 1.85 mm (0.0709 – 0.0728 in.) 1.86 – 1.91 mm (0.0732 – 0.0752 in.) 1.92 – 1.97 mm (0.0756 – 0.0776 in.) 1.98 – 2.03 mm (0.0780 – 0.0799 in.) 2.04 – 2.09 mm (0.0803 – 0.0823 in.) 2.10 – 2.15 mm (0.0827 – 0.0846 in.)
Rear bearing	Mark 8 9 10 11 12 13 14 15	2.31 – 2.36 mm (0.0909 – 0.0929 in.) 2.37 – 2.42 mm (0.0933 – 0.0953 in.) 2.43 – 2.48 mm (0.0957 – 0.0976 in.) 2.49 – 2.54 mm (0.0980 – 0.1000 in.) 2.55 – 2.60 mm (0.1004 – 0.1024 in.) 2.61 – 2.66 mm (0.1028 – 0.1047 in.) 2.68 – 2.73 mm (0.1055 – 0.1075 in.) 2.74 – 2.79 mm (0.1079 – 0.1098 in.)

Output shaft snap ring thickness (cont'd)		
Reverse gear	Mark 5	2.25 – 2.30 mm (0.0886 – 0.0906 in.)
	11	2.30 – 2.35 mm (0.0906 – 0.0925 in.)
	12	2.35 – 2.40 mm (0.0925 – 0.0945 in.)
	13	2.40 – 2.45 mm (0.0945 – 0.0965 in.)
	14	2.45 – 2.50 mm (0.0965 – 0.0984 in.)
	15	2.50 – 2.55 mm (0.0984 – 0.1004 in.)
	16	2.55 – 2.60 mm (0.1004 – 0.1024 in.)
	17	2.61 – 2.66 mm (0.1028 – 0.1047 in.)
	18	2.67 – 2.72 mm (0.1051 – 0.1071 in.)
	19	2.73 – 2.78 mm (0.1075 – 0.1094 in.)
	20	2.79 – 2.84 mm (0.1098 – 0.1118 in.)
	21	2.85 – 2.90 mm (0.1122 – 0.1142 in.)
	22	2.91 – 2.96 mm (0.1146 – 0.1165 in.)
	23	2.97 – 3.02 mm (0.1169 – 0.1189 in.)
Coutner gear snap ring thickness		
Front bearing	Mark A	2.05 – 2.10 mm (0.0807 – 0.0827 in.)
	B	2.10 – 2.15 mm (0.0827 – 0.0846 in.)
	C	2.15 – 2.20 mm (0.0846 – 0.0866 in.)
	D	2.20 – 2.25 mm (0.0866 – 0.0886 in.)
	E	2.25 – 2.30 mm (0.0886 – 0.0906 in.)
	F	2.30 – 2.35 mm (0.0906 – 0.0925 in.)
No. 3 clutch hub	Mark 2	2.06 – 2.11 mm (0.0811 – 0.0831 in.)
	3	2.12 – 2.17 mm (0.0835 – 0.0854 in.)
	4	2.18 – 2.23 mm (0.0858 – 0.0878 in.)
	5	2.24 – 2.29 mm (0.0882 – 0.0902 in.)
Rear bearing	Mark 1	1.90 – 1.95 mm (0.0748 – 0.0768 in.)
	2	1.96 – 2.01 mm (0.0772 – 0.0791 in.)
	3	2.02 – 2.07 mm (0.0795 – 0.0815 in.)
	4	2.08 – 2.13 mm (0.0819 – 0.0839 in.)
	5	2.14 – 2.19 mm (0.0843 – 0.0862 in.)
	6	2.20 – 2.25 mm (0.0866 – 0.0886 in.)
	7	2.26 – 2.31 mm (0.0890 – 0.0909 in.)
Oil seal drive in depth		
Speedometer drive gear		25 mm (0.98 in.)
Front bearing retainer (from retainer end)		12.2 ± 0.5 mm (0.480 ± 0.020 in.)
Extension housing		0 ± 0.5 mm (0 ± 0.020 in.)
Transfer adaptor		45.5 ± 0.5 mm (1.969 ± 0.020 in.)

SS05A–01

TORQUE SPECIFICATION

Part tightened		N·m	kgf·cm	ft·lbf
Transmission x Engine		72	730	53
Transmission x Starter		39	400	29
Stiffener plate x Engine (2WD)		37	380	27
Stiffener plate x Rear end plate (2WD)		37	380	27
Rear end plate x Transmission (4WD)		37	380	27
Front exhaust pipe clamp bolt (2WD)		19	195	14
Front exhaust pipe x Exhaust manifold		62	630	46
Front exhaust pipe x TWC		48	490	35
Front exhaust pipe bracket x Clutch housing (2WD) (See page MT–4)	Bolt A Bolt B	71 72	720 730	52 53
Front exhaust pipe bracket x Clutch housing (4WD) (See page MT–9)	Bolt A Bolt B	71 72	720 730	52 53
Engine rear mounting bracket x Frame (2WD)		58	590	43
Engine rear mounting bracket x Engine rear mounting (2WD)		18	183	13
Engine rear mounting x Crossmember (4WD)		18	183	13
Engine rear mounting x Transmission		65	660	48
Crossmember x Frame (4WD)		65	660	48
Transmission x Transfer (4WD)		24	240	17
Clutch release cylinder x Transmission		12	120	9
Shift fork set bolt		20	200	14
Straight screw plug		25	250	18
Reverse idler gear shaft stopper bolt		25	250	18
Oil separator x Intermediate plate		18	185	13
Front bearing retainer set bolt		25	250	18
Extension housing x Intermediate plate		37	380	27
Transfer adaptor x Intermediate plate		37	380	27
Restrict pin	(2WD) (4WD)	40 27	410 280	30 20
Shift lever housing x Shift and select lever shaft		39	400	29
Control shift lever retainer x Extension housing		18	185	13
Control shift lever retainer x Transfer adaptor		18	185	13
Drain and filler plugs		37	380	27
Back–up light switch		40	410	30
Clutch housing x Transmission case		37	380	27
Rear bearing retainer x Intermediate plate		18	185	13
Vehicle speed sensor driven gear set bolt (2WD)		13	130	9

PROPELLER SHAFT

SS05K–02

SERVICE DATA

Propeller shaft runout		Max.	0.8 mm (0.031 in.)
Spider bearing axial play		Max.	0.05 mm (0.0020 in.)
Spider bearing selection		Mark	
Bearing cup outer diameter		None	29.008 – 29.021 mm (1.1420 – 1.1426 in.)
		Red	29.028 – 29.041 mm (1.1428 – 1.1433 in.)
Bearing hole inner diameter		None	29.000 – 29.020 mm (1.1417 – 1.1425 in.)
		Drill	29.021 – 29.042 mm (1.1426 – 1.1434 in.)
Snap ring thickness			
TMC made	Mark	Color	
	1	–	2.100 – 2.150 mm (0.0827 – 0.0846 in.)
	2	–	2.150 – 2.200 mm (0.0846 – 0.0866 in.)
	3	–	2.200 – 2.250 mm (0.0866 – 0.0886 in.)
	–	Brown	2.250 – 2.300 mm (0.0886 – 0.0906 in.)
	–	Blue	2.300 – 2.350 mm (0.0906 – 0.0925 in.)
	6	–	2.350 – 2.400 mm (0.0925 – 0.0945 in.)
	7	–	2.400 – 2.450 mm (0.0945 – 0.0965 in.)
	8	–	2.450 – 2.500 mm (0.0965 – 0.0984 in.)
DANA made		Color	
		Green	1.384 mm (0.0545 in.)
		Red	1.435 mm (0.0565 in.)
		Black	1.486 mm (0.0585 in.)
		Copper	1.511 mm (0.0595 in.)
		Silver	1.537 mm (0.0605 in.)
		Yellow	1.588 mm (0.0625 in.)
		Blue	1.638 mm (0.0645 in.)

SS05L–02

TORQUE SPECIFICATION

Part tightened		N·m	kgf·cm	ft·lbf
Front differential x Front propeller shaft	4WD	74	750	54
Front propeller shaft x Transfer	4WD	74	750	54
Propeller shaft x Rear differential	4WD and pre runner	74	750	54
Propeller shaft x Transmission (pre runner) / transfer (4WD)		74	750	54
Intermediate shaft x Propeller shaft	4WD and pre runner	74	750	54
Propeller shaft x Differential	2WD	74	750	54
Intermediate shaft x Propeller shaft	2WD	74	750	54
Center support bearing x Frame crossmember	3–joint type	36	370	27
Intermediate shaft x Center bearing x Joint flange	3–joint type			
	1st	181	1,850	134
	2nd	Loosen nut		
	3rd	69	700	51

SUPPLEMENTAL RESTRAINT SYSTEM

SS01W–09

TORQUE SPECIFICATION

Part tightened		N·m	kgf·cm	ft·lbf
Steering wheel		50	500	35
Steering wheel pad		9.0	90	78 in.·lbf
Front passenger airbag assembly x Instrument panel		5.0	51	42 in.·lbf
Front passenger airbag assembly x Instrument panel reinforcement		20	205	15
Airbag sensor assembly		20	205	15
Front airbag sensor x Body	Bolt	13	130	9
	Nut	13	130	9

SUSPENSION AND AXLE

SS051–07

SERVICE DATA

Cold tire inflation pressure	P205/75R15 97S	Front	200 kPa (2.0 kgf/cm^2, 29 psi)
		Rear	200 kPa (2.0 kgf/cm^2, 29 psi)
	P235/55R16 96T	Front	200 kPa (2.0 kgf/cm^2, 29 psi)
		Rear	220 kPa (2.2 kgf/cm^2, 32 psi)
	P225/75R15 102S	Front	180 kPa (1.8 kgf/cm^2, 26 psi)
		Rear	200 kPa (2.0 kgf/cm^2, 29 psi)
	P265/70R16 111S	Front	180 kPa (1.8 kgf/cm^2, 26 psi)
		Rear	180 kPa (1.8 kgf/cm^2, 26 psi)
	P265/70R16 111T		
	Except double cab models	Front	180 kPa (1.8 kgf/cm^2, 26psi)
		Rear	200 kPa (2.0 kgf/cm^2, 29psi)
	Double cab models	Front	180 kPa (1.8 kgf/cm^2, 26psi)
		Rear	180 kPa (1.8 kgf/cm^2, 26psi)
Front wheel Alignment (2WD except pre runner)	● Vehicle height		
	RZN140L–TRMDKAB	Front: A*1 – B*2	26 mm (1.02 in.)
		Rear: C*3 – D*4	37 mm (1.46 in.)
	RZN140L–TRPDKAB	Front: A*1 – B*2	28 mm (1.10 in.)
		Rear: C*3 – D*4	38 mm (1.50 in.)
	RZN150L–CRMDKAB	Front: A*1 – B*2	25 mm (0.98 in.)
		Rear: C*3 – D*4	46 mm (1.18 in.)
	RZN150L–CRPDKAB	Front: A*1 – B*2	27 mm (1.06 in.)
		Rear: C*3 – D*4	46 mm (1.18 in.)
	VZN150L–CRMDKAB	Front: A*1 – B*2	35 mm (1.38 in.)
		Rear: C*3 – D*4	57 mm (2.24 in.)
	● Camber		0°00' ± 45' (0.00° ± 0.75°)
		Right–left error	30' (0.5°) or less
	● Caster		Right – left error: 30' (0.5°) or less
	RZN140L–TRMDKAB		
	Tire size: P205/75R15 97S		0°13' ± 45' (0.22° ± 0.75°)
	Tire size: P235/55R16 96T		0°12' ± 45' (0.20° ± 0.75°)
	RZN140L–TRPDKAB		
	Tire size: P205/75R15 97S		0°13' ± 45' (0.21° ± 0.75°)
	Tire size: P235/55R16 96T		0°12' ± 45' (0.20° ± 0.75°)
	RZN150L–CRMDKAB		
	Tire size: P205/75R15 97S		0°40' ± 45' (0.67° ± 0.75°)
	Tire size: P235/55R16 96T		0°40' ± 45' (0.66° ± 0.75°)
	RZN150L–CRPDKAB		
	Tire size: P205/75R15 97S		0°41' ± 45' (0.68° ± 0.75°)
	Tire size: P235/55R16 96T		0°40' ± 45' (0.67° ± 0.75°)
	VZN150L–CRMDKAB		0°55' ± 45' (0.92° ± 0.75°)
	● Steering axis inclination		10°00' ± 45' (10.00° ± 0.75°)
		Right–left error	30' (0.5°) or less

Measuring point

A*1: Ground clearance of spindle center

B*2: Ground clearance of lower suspension arm bolt center

C*3: Ground clearance of rear axle shaft center

D*4: Ground clearance of leaf spring front hanger pin bolt center

Front wheel Alignment (2WD except pre runner, cont'd)	● Toe–in (Total)	Rack end length difference: 1.5 mm (0.059 in.) or less
	RZN140L–TRMDKAB	0°09' ± 12' (0.15° ± 0.2°, 1.6 ± 2 mm, 0.06 ± 0.08 in.)
	RZN140L–TRPDKAB	0°08' ± 12' (0.13° ± 0.2°, 1.4 ± 2 mm, 0.06 ± 0.08 in.)
	RZN150L–CRMDKAB	0°09' ± 12' (0.15° ± 0.2°, 1.6 ± 2 mm, 0.06 ± 0.08 in.)
	RZN150L–CRPDKAB Tire size: P205/75R15 97S Tire size: P235/55R16 96T	 0°08' ± 12' (0.14° ± 0.2°, 1.5 ± 2 mm, 0.06 ± 0.08 in.) 0°09' ± 12' (0.14° ± 0.2°, 1.5 ± 2 mm, 0.06 ± 0.08 in.)
	VZN150L–CRMDKAB	0°09' ± 12' (0.16° ± 0.2°, 1.7 ± 2 mm, 0.07 ± 0.08 in.)
	● Wheel angle (Max.) Inside wheel Outside wheel: Reference	36° (33° – 36°) 31° (28° – 31°)
Front wheel Alignment (4WD and pre runner)	● Vehicle height	
	RZN161L–TRMDKAB Normal Front: A*1 – B*2 Rear: C*3 – D*4 Heavy duty leaf spring Tire size: P225/75R15 102S Front: A*1 – B*2 Rear: C*3 – D*4 Tire size: P265/70R16 111S, P265/70R16 111T Front: A*1 – B*2 Rear: C*3 – D*4	 42 mm (1.65 in.) –43 mm (–1.69 in.) 42 mm (1.65 in.) –40 mm (–1.57 in.) 42 mm (1.65 in.) –41 mm (–1.61 in.)
	RZN161L–TRPDKAB Normal Front: A*1 – B*2 Rear: C*3 – D*4 Heavy–duty leaf spring Tire size: P255/75R15 102S Front: A*1 – B*2 Rear: C*3 – D*4 Tire size: P265/70R16 111S, P265/70R16 111T Front: A*1 – B*2 Rear: C*3 – D*4	 40 mm (1.57 in.) –43 mm (–1.69 in.) 40 mm (1.57 in.) –40 mm (–1.57 in.) 40 mm (1.57 in.) –41 mm (–1.61 in.)
	VZN170L–CRMDKAB Normal Tire size: P225/75R15 102S, P265/75R15 111T Front: A*1 – B*2 Rear: C*3 – D*4 Tire size: P265/75R15 111S Front: A*1 – B*2 Rear: C*3 – D*4 Off–road package Front: A*1 – B*2 Rear: C*3 – D*4 Heavy–duty leaf spring Tire size: P225/75R15 102S, P265/70R16 111S Front: A*1 – B*2 Rear: C*3 – D*4 Tire size: P265/70R16 111T Front: A*1 – B*2 Rear: C*3 – D*4	 40 mm (1.57 in.) –44 mm (–1.73 in.) 40 mm (1.57 in.) –45 mm (–1.77 in.) 53 mm (2.10 in.) –39 mm (–1.54 in.) 40 mm (1.57 in.) –39 mm (–1.54 in.) 40 mm (1.57 in.) –38 mm (–1.50 in.)

Measuring point

A*1: Ground clearance of spindle center

B*2: Ground clearance of front adjusting cam bolt center

C*3: Ground clearance of rear axle shaft center

D*4: Ground clearance of leaf spring front hanger pin bolt center

Front wheel Alignment (4WD and pre runner, cont'd)	VZN170L–CRPDKAB		
	Normal		
	Tire size: P225/75R15 102S, P265/70R16 111T	Front: A*1 – B*2	41 mm (1.61 in.)
		Rear: C*3 – D*4	–44 mm (–1.73 in.)
	Tire size: P265/70R16 111S	Front: A*1 – B*2	41 mm (1.61 in.)
		Rear: C*3 – D*4	–45 mm (–1.77 in.)
	Off–road package	Front: A*1 – B*2	49 mm (1.93 in.)
		Rear: C*3 – D*4	–39 mm (–1.54 in.)
	Heavy–duty leaf spring		
	Tire size: P225/75R15 102S, P265/70R16 111T	Front: A*1 – B*2	41 mm (1.61 in.)
		Rear: C*3 – D*4	–38 mm (–1.50 in.)
	Tire size: P265/70R16 111S	Front: A*1 – B*2	41 mm (1.61 in.)
		Rear: C*3 – D*4	–39 mm (–1.54 in.)
	VZN170L–PRPDKAB		
	Normal	Front: A*1 – B*2	68 mm (2.68 in.)
		Rear: C*3 – D*4	–20 mm (–0.79 in.)
	Off–road package	Front: A*1 – B*2	69 mm (2.72 in.)
		Rear: C*3 – D*4	–17 mm (–0.67 in.)
	RZN171L–CRMDKAB		
	Normal		
	Tire size: P225/75R15 102S, P265/70R16 111S	Front: A*1 – B*2	39 mm (1.54 in.)
		Rear: C*3 – D*4	–44 mm (–1.73 in.)
	Tire size: P265/70R16 111T	Front: A*1 – B*2	39 mm (1.54 in.)
		Rear: C*3 – D*4	–43 mm (–1.69 in.)
	Off–road package	Front: A*1 – B*2	52 mm (2.05 in.)
		Rear: C*3 – D*4	–38 mm (–1.50 in.)
	Heavy–duty leaf spring		
	Tire size: P225/75R15 102S, P265/70R16 111T	Front: A*1 – B*2	39 mm (1.54 in.)
		Rear: C*3 – D*4	–38 mm (–1.50 in.)
	Tire size: P265/70R16 111S	Front: A*1 – B*2	39 mm (1.54 in.)
		Rear: C*3 – D*4	–39 mm (–1.54 in.)
	RZN171L–CRPDKAB		
	Normal		
	Tire size: P225/75R15 102S, P265/70R16 111T	Front: A*1 – B*2	40 mm (1.57 in.)
		Rear: C*3 – D*4	–43 mm (–1.69 in.)
	Tire size: P265/70R16 111S	Front: A*1 – B*2	40 mm (1.57 in.)
		Rear: C*3 – D*4	–44 mm (–1.73 in.)
	Heavy–duty leaf spring		
	Tire size: P225/75R15 102S, P265/70R16 111T	Front: A*1 – B*2	40 mm (1.57 in.)
		Rear: C*3 – D*4	–38 mm (–1.50 in.)
	Tire size: P265/70R16 111S	Front: A*1 – B*2	40 mm (1.57 in.)
		Rear: C*3 – D*4	–39 mm (–1.54 in.)

Measuring point

A*1: Ground clearance of spindle center

B*2: Ground clearance of front adjusting cam bolt center

C*3: Ground clearance of rear axle shaft center

D*4: Ground clearance of leaf spring front hanger pin bolt center

Front wheel Alignment (4WD and pre runner, cont'd)	RZN191L–TRPDKAB		
	Normal	Front: A*1 – B*2	39 mm (1.54 in.)
		Rear: C*3 – D*4	–46 mm (–1.18 in.)
	Heavy–duty leaf spring		
	Tire size: P225/75R15 102S	Front: A*1 – B*2	39 mm (1.54 in.)
		Rear: C*3 – D*4	–42 mm (–1.65 in.)
	Tire size: P265/70R16 111S, P265/70R16 111T	Front: A*1 – B*2	39 mm (1.54 in.)
		Rear: C*3 – D*4	–43 mm (–1.69 in.)
	VZN195L–CRPDKAB		
	Normal	Front: A*1 – B*2	42 mm (1.65 in.)
		Rear: C*3 – D*4	–46 mm (–1.81 in.)
	Off–road package	Front: A*1 – B*2	47 mm (1.85 in.)
		Rear: C*3 – D*4	–41 mm (–1.61 in.)
	Heavy–duty leaf spring		
	Tire size: P225/75R15 102S	Front: A*1 – B*2	42 mm (1.65 in.)
		Rear: C*3 – D*4	–40 mm (–1.57 in.)
	Tire size: P265/70R16 111S, P265/70R16 111T	Front: A*1 – B*2	42 mm (1.65 in.)
		Rear: C*3 – D*4	–39 mm (–1.54 in.)
	VZN195L–PRPDKAB		
	Normal	Front: A*1 – B*2	67 mm (2.64 in.)
		Rear: C*3 – D*4	–23 mm (–0.91 in.)
	Off–road package	Front: A*1 – B*2	68 mm (2.68 in.)
		Rear: C*3 – D*4	–20 mm (–0.79 in.)
	RZN196L–CRPDKAB		
	Normal	Front: A*1 – B*2	39 mm (1.54 in.)
		Rear: C*3 – D*4	–46 mm (–1.81 in.)
	Off–road package	Front: A*1 – B*2	48 mm (1.89 in.)
		Rear: C*3 – D*4	–41 mm (–1.61 in.)
	Heavy–duty leaf spring		
	Tire size: P225/75R15 102S, P265/70R16 111S	Front: A*1 – B*2	39 mm (1.54 in.)
		Rear: C*3 – D*4	–40 mm (–1.57 in.)
	Tire size: P265/70R16 111T	Front: A*1 – B*2	39 mm (1.54 in.)
		Rear: C*3 – D*4	–39 mm (–1.54 in.)
	RZN196L–PRPDKAB		
	Normal	Front: A*1 – B*2	66 mm (2.60 in.)
		Rear: C*3 – D*4	–23 mm (–0.91 in.)
	Off–road package	Front: A*1 – B*2	77 mm (3.03 in.)
		Rear: C*3 – D*4	–19 mm (–0.75 in.)

Measuring point

A*1: Ground clearance of spindle center

B*2: Ground clearance of front adjusting cam bolt center

C*3: Ground clearance of rear axle shaft center

D*4: Ground clearance of leaf spring front hanger pin bolt center

Front wheel Alignment (4WD and pre runner, cont'd)	● Camber	Right – left error: 30' (0.5°) or less
	RZN161L models	0°18' ± 45' (0.3° ± 0.75°)
	VZN170L models	
	Except double cab models	
	Normal	0°18' ± 45' (0.3° ± 0.75°)
	Off–road package	0°06' ± 45' (0.1° ± 0.75°)
	Double cab models	
	Normal	–0°12' ± 45' (–0.2° ± 0.75°)
	Off–road package	−0°18' ± 45' (–0.3° ± 0.75°)
	RZN171L models	
	Normal	0°18' ± 45' (0.3° ± 0.75°)
	Off–road package	0°06' ± 45' (0.1° ± 0.75°)
	RZN191L models	0°18' ± 45' (0.3° ± 0.75°)
	VZN195L models	
	Except double cab models	0°12' ± 45' (0.2° ± 0.75°)
	Double cab models	
	Normal	–0°12' ± 45' (–0.2° ± 0.75°)
	Off–road package	–0°18' ± 45' (–0.3° ± 0.75°)
	VZN196L models	
	Except double cab models	
	Normal	0°18' ± 45' (0.3° ± 0.75°)
	Off–road package	0°12' ± 45' (0.2° ± 0.75°)
	Double cab models	
	Normal	−0'12' ± 45' (–0.2° ± 0.75°)
	Off–road package	−0'30' ± 45' (–0.5° ± 0.75°)
	● Caster	Right–left error: 30' (0.5°) or less
	RZN161L–TRMDKAB	
	Normal	
	Tire size: P225/75R15 102S	1°37' ± 45' (1.62° ± 0.75°)
	Tire size: P265/70R16 111S	1°38' ± 45' (1.63° ± 0.75°)
	Tire size: P265/70R16 111T	1°37' ± 45' (1.61° ± 0.75°)
	Heavy–duty leaf spring	
	Tire size: P225/75R15 102S	1°41' ± 45' (1.69° ± 0.75°)
	Tire size: P265/70R16 111S	1°43' ± 45' (1.71° ± 0.75°)
	Tire size: P265/70R16 111T	1°41' ± 45' (1.68° ± 0.75°)
	RZN161L–TRPDKAB	
	Normal	
	Tire size: P225/75R15 102S	1°37' ± 45' (1.62° ± 0.75°)
	Tire size: P265/70R16 111S	1°38' ± 45' (1.64° ± 0.75°)
	Tire size: P265/70R16 111T	1°37' ± 45' (1.61° ± 0.75°)
	Heavy–duty leaf spring	
	Tire size: P225/75R15 102S	1°42' ± 45' (1.70° ± 0.75°)
	Tire size: P265/70R16 111S	1°43' ± 45' (1.71° ± 0.75°)
	Tire size: P265/70R16 111T	1°41' ± 45' (1.69° ± 0.75°)
	VZN170L–CRMDKAB	
	Normal	
	Tire size: P225/75R15 102S	1°42' ± 45' (1.70° ± 0.75°)
	Tire size: P265/70R16 111S	1°43' ± 45' (1.72° ± 0.75°)
	Tire size: P265/70R16 111T	1°41' ± 45' (1.69° ± 0.75°)
	Off–road package	2°02' ± 45' (2.03° ± 0.75°)
	Heavy–duty leaf spring	
	Tire size: P225/75R15 102S	1°50' ± 45' (1.83° ± 0.75°)
	Tire size: P265/70R16 111S	1°51' ± 45' (1.85° ± 0.75°)
	Tire size: P265/70R16 111T	1°49' ± 45' (1.82° ± 0.75°)

Front wheel Alignment (4WD and pre runner, cont'd)	VZN170L–CRPDKAB	
	Normal	
	Tire size: P225/75R15 102S, P265/70R16 111T	1°41' ± 45' (1.69° ± 0.75°)
	Tire size: P265/70R16 111S	1°43' ± 45' (1.71° ± 0.75°)
	Off–road package	1°58' ± 45' (1.96° ± 0.75°)
	Heavy–duty leaf spring	
	Tire size: P225/75R15 102S, P265/70R16 111T	1°49' ± 45' (1.82° ± 0.75°)
	Tire size: P265/70R16 111S	1°50' ± 45' (1.84° ± 0.75°)
	VZN170L–PRPDKAB	
	Normal	
	Tire size: P225/75R15 102S	2°36' ± 45' (2.60° ± 0.75°)
	Tire size: P265/70R16 111S	2°36' ± 45' (2.61° ± 0.75°)
	Tire size: P265/70R16 111T	2°35' ± 45' (2.59° ± 0.75°)
	Off–road package	2°39' ± 45' (2.66° ± 0.75°)
	VZN171L–CRMDKAB	
	Normal	
	Tire size: P225/75R15 102S	1°44' ± 45' (1.74° ± 0.75°)
	Tire size: P265/70R16 111S	1°45' ± 45' (1.75° ± 0.75°)
	Tire size: P265/70R16 111T	1°44' ± 45' (1.73° ± 0.75°)
	Off–road package	2°02' ± 45' (2.03° ± 0.75°)
	Heavy–duty leaf spring	
	Tire size: P225/75R15 102S	1°52' ± 45' (1.86° ± 0.75°)
	Tire size: P265/70R16 111S	1°52' ± 45' (1.87° ± 0.75°)
	Tire size: P265/70R16 111T	1°51' ± 45' (1.85° ± 0.75°)
	RZN171L–CRPDKAB	
	Normal	
	Tire size: P225/75R15 102S, P265/70R16 111T	1°44' ± 45' (1.73° ± 0.75°)
	Tire size: P265/70R16 111S	1°45' ± 45' (1.75° ± 0.75°)
	Heavy–duty leaf spring	
	Tire size: P225/75R15 102S	1°52' ± 45' (1.86° ± 0.75°)
	Tire size: P265/70R16 111S	1°52' ± 45' (1.87° ± 0.75°)
	Tire size: P265/70R16 111T	1°51' ± 45' (1.85° ± 0.75°)
	RZN191L–TRPDKAB	
	Normal	
	Tire size: P225/75R15 102S	1°37' ± 45' (1.62° ± 0.75°)
	Tire size: P265/70R16 111S	1°38' ± 45' (1.63° ± 0.75°)
	Tire size: P265/70R16 111T	1°37' ± 45' (1.61° ± 0.75°)
	Heavy–duty leaf spring	
	Tire size: P225/75R15 102S	1°43' ± 45' (1.72° ± 0.75°)
	Tire size: P265/70R16 111S	1°44' ± 45' (1.73° ± 0.75°)
	Tire size: P265/70R16 111T	1°43' ± 45' (1.71° ± 0.75°)
	VZN195L–CRPDKAB	
	Normal	
	Tire size: P225/75R15 102S	1°43' ± 45' (1.71° ± 0.75°)
	Tire size: P265/70R16 111S	1°44' ± 45' (1.73° ± 0.75°)
	Tire size: P265/70R16 111T	1°42' ± 45' (1.70° ± 0.75°)
	Off–road package	1°56' ± 45' (1.93° ± 0.75°)
	Heavy–duty leaf spring	
	Tire size: P225/75R15 102S	1°52' ± 45' (1.86° ± 0.75°)
	Tire size: P265/70R16 111S	1°53' ± 45' (1.88° ± 0.75°)
	Tire size: P265/70R16 111T	1°51' ± 45' (1.85° ± 0.75°)

Front wheel Alignment (4WD and pre runner, cont'd)	VZN195L–PRPDKAB	
	Normal	
	Tire size: P225/75R15 102S	2°31' ± 45' (2.53° ± 0.75°)
	Tire size: P265/70R16 111S	2°35' ± 45' (2.59° ± 0.75°)
	Tire size: P265/70R16 111T	2°33' ± 45' (2.56° ± 0.75°)
	Off–road package	2°39' ± 45' (2.66° ± 0.75°)
	RZN196L–CRPDKAB	
	Normal	
	Tire size: P225/75R15 102S	1°43' ± 45' (1.72° ± 0.75°)
	Tire size: P265/70R16 111S	1°44' ± 45' (1.73° ± 0.75°)
	Tire size: P265/70R16 111T	1°43' ± 45' (1.71° ± 0.75°)
	Off–road package	1°56' ± 45' (1.94° ± 0.75°)
	Heavy–duty leaf spring	
	Tire size: P225/75R15 102S	1°52' ± 45' (1.86° ± 0.75°)
	Tire size: P265/70R16 111S	1°52' ± 45' (1.87° ± 0.75°)
	Tire size: P265/70R16 111T	1°51' ± 45' (1.85° ± 0.75°)
	RZN196L–PRPDKAB	
	Normal	
	Tire size: P225/75R15 102S	2°34' ± 45' (2.58° ± 0.75°)
	Tire size: P265/70R16 111S	2°35' ± 45' (2.59° ± 0.75°)
	Tire size: P265/70R16 111T	2°33' ± 45' (2.56° ± 0.75°)
	Off–road package	2°45' ± 45' (2.75° ± 0.75°)
	● Steering axis inclination	Right – left error: 30' (0.5°) or less
	RZN161L models	10°30' ± 45' (10.5° ± 0.75°)
	VZN170L–CRMDKAB	
	Except off–road package	10°30' ± 45' (10.5° ± 0.75°)
	Off–road package	10°42' ± 45' (10.7° ± 0.75°)
	VZN170L–CRPDKAB	
	Except off–road package	10°30' ± 45' (10.5° ± 0.75°)
	Off–road package	10°36' ± 45' (10.6° ± 0.75°)
	VZN170L–PRPDKAB	11°00' ± 45' (11.0° ± 0.75°)
	RZN171L–CRMDKAB	
	Except off–road package	10°24' ± 45' (10.4° ± 0.75°)
	Off–road package	10°49' ± 45' (10.7° ± 0.75°)
	RZN171L–CRPDKAB	10°30' ± 45' (10.5° ± 0.75°)
	RZN191L–TRPDKAB	10°24' ± 45' (10.4° ± 0.75°)
	VZN195L–CRPDKAB	
	Except off–road package	10°30' ± 45' (10.5° ± 0.75°)
	Off–road package	10°36' ± 45' (10.6° ± 0.75°)
	VZN195L–PRPDKAB	11°00' ± 45' (11.0° ± 0.75°)
	VZN196L–CRPDKAB	
	Except off–road package	10°24' ± 45' (10.4° ± 0.75°)
	Off–road package	10°36' ± 45' (10.6° ± 0.75°)
	VZN196L–PRPDKAB	
	Normal	10°54' ± 45' (10.9° ± 0.75°)
	Off–road package	11°12' ± 45' (11.2° ± 0.75°)

Front wheel Alignment (4WD and pre runner, cont'd)	● Toe – in (Total)	Rack end length difference : 1.5 mm (0.059 in.) or less
	RZN161L–TRMDKAB	
	Tire size: P225/75R15 102S	0˚07' ± 12' (0.12˚ ± 0.2˚, 1.3 ± 2 mm, 0.05 ± 0.08 in.)
	Tire size: P265/70R16 111S, P265/70R16 111T	0˚07' ± 12' (0.11˚ ± 0.2˚, 1.4 ± 2 mm, 0.06 ± 0.08 in.)
	RZN161L–TRPDKAB	
	Tire size: P225/75R15 102S	0˚07' ± 12' (0.12˚ ± 0.2˚, 1.4 ± 2 mm, 0.06 ± 0.08 in.)
	Tire size: P265/70R16 111S, P265/70R16 111T	0˚07' ± 12' (0.12˚ ± 0.2˚, 1.5 ± 2 mm, 0.06 ± 0.08 in.)
	VZN170L–CRMDKAB	
	Except off–road package	
	Tire size: P225/75R15 102S	0˚07' ± 12' (0.12˚ ± 0.2˚, 1.4 ± 2 mm, 0.06 ± 0.08 in.)
	Tire size: P265/70R16 111S, P265/70R16 111T	0˚07' ± 12' (0.12˚ ± 0.2˚, 1.5 ± 2 mm, 0.06 ± 0.08 in.)
	Off–road package	0˚02' ± 12' (0.03˚ ± 0.2˚, 0.4 ± 2 mm, 0.02 ± 0.08 in.)
	VZN170L–CRPDKAB	
	Except off–road package	
	Tire size: P225/75R15 102S	0˚07' ± 12' (0.12˚ ± 0.2˚, 1.3 ± 2 mm, 0.05 ± 0.08 in.)
	Tire size: P265/70R16 111S, P265/70R16 111T	0˚07' ± 12' (0.11˚ ± 0.2˚, 1.4 ± 2 mm, 0.06 ± 0.08 in.)
	Off–road package	0˚03' ± 12' (0.06˚ ± 0.2˚, 0.7 ± 2 mm, 0.03 ± 0.08 in.)
	VZN170L–PRPDKAB	
	Except off–road package	
	Tire size: P225/75R15 102S	0˚04' ± 12' (0.07˚ ± 0.2˚, 0.8 ± 2 mm, 0.03 ± 0.08 in.)
	Tire size: P265/70R16 111S, P265/70R16 111T	0˚04' ± 12' (0.07˚ ± 0.2˚, 0.9 ± 2 mm, 0.04 ± 0.08 in.)
	Off–road package	0˚03' ± 12' (0.06˚ ± 0.2˚, 0.8 ± 2 mm, 0.03 ± 0.08 in.)
	RZN171L–CRMDKAB	
	Except off–road package	
	Tire size: P225/75R15 102S	0˚07' ± 12' (0.12˚ ± 0.2˚, 1.4 ± 2 mm, 0.05 ± 0.08 in.)
	Tire size: P265/70R16 111S, P265/70R16 111T	0˚08' ± 12' (0.13˚ ± 0.2˚, 1.6 ± 2 mm, 0.06 ± 0.08 in.)
	Off–road package	0˚02' ± 12' (0.04˚ ± 0.2˚, 0.5 ± 2 mm, 0.02 ± 0.08 in.)
	RZN171L–CRPDKAB	
	Tire size: P225/75R15 102S	0˚07' ± 12' (0.12˚ ± 0.2˚, 1.4 ± 2 mm, 0.06 ± 0.08 in.)
	Tire size: P265/70R16 111S, P265/70R16 111T	0˚07' ± 12' (0.12˚ ± 0.2˚, 1.5 ± 2 mm, 0.06 ± 0.08 in.)
	RZN191L–TRPDKAB	
	Tire size: P225/75R15 102S	0˚07' ± 12' (0.12˚ ± 0.2˚, 1.4 ± 2 mm, 0.06 ± 0.08 in.)
	Tire size: P265/70R16 111S, P265/70R16 111T	0˚08' ± 12' (0.13˚ ± 0.2˚, 1.6 ± 2 mm, 0.06 ± 0.08 in.)
	VZN195L–CRPDKAB	
	Except off–road package	
	Tire size: P225/75R15 102S	0˚06' ± 12' (0.10˚ ± 0.2˚, 1.1 ± 2 mm, 0.04 ± 0.08 in.)
	Tire size: P265/70R16 111S, P265/70R16 111T	0˚06' ± 12' (0.10˚ ± 0.2˚, 1.2 ± 2 mm, 0.05 ± 0.08 in.)
	Off–road package	0˚04' ± 12' (0.07˚ ± 0.2˚, 0.8 ± 2 mm, 0.03 ± 0.08 in.)
	VZN195L–PRPDKAB	
	Normal	
	Tire size: P225/75R15 102S	0˚04' ± 12' (0.07˚ ± 0.2˚, 0.9 ± 2 mm, 0.04 ± 0.08 in.)
	Tire size: P265/70R16 111S, P265/70R16 111T	0˚04' ± 12' (0.07˚ ± 0.2˚, 1.0 ± 2 mm, 0.04 ± 0.08 in.)
	Off–road package	0˚03' ± 12' (0.06˚ ± 0.2˚, 0.8 ± 2 mm, 0.03 ± 0.08 in.)
	RZN196L–CRPDKAB	
	Except off–road package	
	Tire size: P225/75R15 102S	0˚07' ± 12' (0.12˚ ± 0.2˚, 1.4 ± 2 mm, 0.06 ± 0.08 in.)
	Tire size: P265/70R16 111S, P265/70R16 111T	0˚08' ± 12' (0.13˚ ± 0.2˚, 1.6 ± 2 mm, 0.06 ± 0.08 in.)
	Off–road package	0˚04' ± 12' (0.07˚ ± 0.2˚, 0.8 ± 2 mm, 0.03 ± 0.08 in.)
	RZN196L–PRPDKAB	
	Normal	
	Tire size: P225/75R15 102S	0˚04' ± 12' (0.07˚ ± 0.2˚, 1.0 ± 2 mm, 0.04 ± 0.08 in.)
	Tire size: P265/70R16 111S, P265/70R16 111T	0˚05' ± 12' (0.08˚ ± 0.2˚, 1.1 ± 2 mm, 0.04 ± 0.08 in.)
	Off–road package	0˚00' ± 12' (0˚ ± 0.2˚, 0 ± 2 mm, 0 ± 0.08 in.)
	● Wheel angle (max.) Inside wheel	35˚05' – 38˚05' (35.08˚ – 38.08˚)
	Outside wheel: Reference	32˚20' (32.33˚)

Front axle (2WD except pre runner)	Axle hub bearing backlash	Max.	0.05 mm (0.0020 in.)
	Axle hub preload (at starting)		Frictional force plus 6 – 18 N (0.6 – 1.8 kgf, 1.3 – 4.0 lbf)
Front drive shaft	Front drive shaft length		436.2 ± 2.0 mm (17.173 ± 0.079 in.)
Front suspension (2WD except pre runner)	Upper ball joint turning torque		0.5 – 3.5 N·m (5 – 35 kgf·cm, 4 – 30 in.·lbf)
	Lower ball joint turning torque		0.1 – 3.45 N·m (1 – 35 kgf·cm, 0.8 – 30 in.·lbf)
	Lower ball joint excessive play	Max.	0.5 mm (0.020 in.)
Front suspension (4WD and pre runner)	Upper ball joint turning torque		0.7 – 4.4 N·m (7 – 45 kgf·cm, 6 – 39 in.·lbf)
	Lower ball joint turning torque		0.1 – 2.5 N·m (1 – 25 kgf·cm, 1 – 22 in.·lbf)
	Lower ball joint excessive play	Max.	0.5 mm (0.020 in.)
	Stabilizer bar link ball joint turning toque		0.05 – 2.0 N·m (0.5 – 20 kgf·cm, 0.4 – 17 in.·lbf)
Rear axle shaft	Axle shaft bearing backlash	Max.	0.7 mm (0.028 in.)
	Axle shaft deviation	Max.	0.1 mm (0.0039 in.)
	Shaft runout	Max.	2.0 mm (0.079 in.)
	Flange runout	Max.	0.1 mm (0.004 in.)
Front differential	Companion flange vertical runout	Max.	0.10 mm (0.0039 in.)
	Companion flange horizontal runout	Max.	0.10 mm (0.0039 in.)
	Drive pinion preload (at starting)	New bearing Reused bearing	1.2 – 1.9 N·m (12 – 19 kgf·cm, 10.4 – 16.5 in.·lbf) 0.6 – 1.0 N·m (6 – 10 kgf·cm, 5.2 – 8.7 in.·lbf)
	Total preload (at starting)		Drive pinion preload plus 0.4 – 0.6 N·m (4 – 6 kgf·cm, 3.5 – 5.2 in.·lbf)
	Drive pinion to ring gear backlash		0.13 – 0.18 mm (0.0051 – 0.0071 in.)
	Side gear backlash		0 – 0.20 mm (0 – 0.0079 in.)
	Rear oil seal drive in depth		4.5 ± 0.3 mm (0.177 ± 0.012 in.)
	Side oil seal drive in depth		0 mm (0 in.)
	Side tube oil seal drive in depth		5.5 ± 0.3 mm (0.217 ± 0.012 in.)
	Side gear thrust washer thickness		0.96 – 1.04 mm (0.0378 – 0.0409 in.)
			1.06 – 1.14 mm (0.0417 – 0.0449 in.)
			1.16 – 1.24 mm (0.0457 – 0.0488 in.)
			1.26 – 1.34 mm (0.0496 –0.0528 in.)

Front differential (cont'd)	Side gear bearing adjusting washer thickness	2.00 – 2.02 mm (0.0787 – 0.0795 in.)
		2.03 – 2.05 mm (0.0799 – 00807 in.)
		2.06 – 2.08 mm (0.0811 – 0.0819 in.)
		2.09 – 2.11 mm (0.0823 – 0.0831 in.)
		2.12 – 2.14 mm (0.0835 – 0.0843 in.)
		2.15 – 2.17 mm (0.0846 – 0.0854 in.)
		2.18 – 2.20 mm (0.0858 – 0.0866 in.)
		2.21 – 2.23 mm (0.0870 – 0.0878 in.)
		2.24 – 2.26 mm (0.0882 – 0.0890 in.)
		2.27 – 2.29 mm (0.0894 – 0.0902 in.)
		2.30 – 2.32 mm (0.0906 – 0.0913 in.)
		2.33 – 2.35 mm (0.0917 – 0.0925 in.)
		2.36 – 2.38 mm (0.0929 – 0.0937 in.)
		2.39 – 2.41 mm (0.0941 – 0.0949 in.)
		2.42 – 2.44 mm (0.0953 – 0.0961 in.)
		2.45 – 2.47 mm (0.0965 – 0.0972 in.)
		2.48 – 2.50 mm (0.0976 – 0.0984 in.)
		2.51 – 2.53 mm (0.0988 – 0.0996 in.)
		2.54 – 2.56 mm (0.1000 – 01008 in.)
		2.57 – 2.59 mm (0.1012 – 0.1020 in.)
		2.60 – 2.62 mm (0.1024 – 0.1031 in.)
		2.63 – 2.65 mm (0.1035 – 0.1043 in.)
		2.66 – 2.68 mm (0.1047 – 0.1055 in.)
		2.69 – 2.71 mm (0.1059 – 0.1067 in.)
		2.72 – 2.74 mm (0.1071 – 0.1079 in.)
		2.75 – 2.77 mm (0.1083 – 0.1091 in.)
		2.78 – 2.80 mm (0.1094 – 0.1102 in.)
	Drive pinion bearing adjusting washer thickness	1.69 – 1.71 mm (0.0665 – 0.0673 in.)
		1.72 – 1.74 mm (0.0677 – 0.0685 in.)
		1.75 – 1.77 mm (0.0689 – 0.0697 in.)
		1.78 – 1.80 mm (0.0701 – 0.0709 in.)
		1.81 – 1.83 mm (0.0713 – 0.0720 in.)
		1.84 – 1.86 mm (0.0724 – 0.0732 in.)
		1.87 – 1.89 mm (0.0736 – 0.0744 in.)
		1.90 – 1.92 mm (0.0748 – 0.0756 in.)
		1.93 – 1.95 mm (0.0760 – 0.0768 in.)
		1.96 – 1.98 mm (0.0772 – 0.0780 in.)
		1.99 – 2.01 mm (0.0783 – 0.0791 in.)
		2.02 – 2.04 mm (0.0795 – 0.0803 in.)
		2.05 – 2.07 mm (0.0807 – 0.0815 in.)
		2.08 – 2.10 mm (0.0819 – 0.0827 in.)

Front differential (cont'd)	Drive pinion bearing adjusting washer thickness	2.11 – 2.13 mm (0.0831 – 0.0839 in.)
		2.14 – 2.16 mm (0.0843 – 0.0850 in.)
		2.17 – 2.19 mm (0.0854 – 0.0862 in.)
		2.20 – 2.22 mm (0.0866 – 0.0874 in.)
		2.23 – 2.25 mm (0.0878 – 0.0886 in.)
		2.26 – 2.28 mm (0.0890 – 0.0898 in.)
		2.29 – 2.31 mm (0.0902 – 0.0909 in.)
		2.32 – 2.34 mm (0.0913 – 0.0921 in.)
	A.D.D. sleeve fork to clutch sleeve clearance	0.35 mm (0.0138 in.) or less
	Differential case needle bearing press in depth	0.3 ± 0.3 mm (0.012 ± 0.012 in.)
Rear differential (2RZ–FE)	Companion flange vertical runout Max.	0.10 mm (0.0039 in.)
	Companion flange lateral runout Max.	0.10 mm (0.0039 in.)
	Drive pinion preload (at starting) New bearing	1.4 – 2.1 N·m (14 – 21 kgf·cm, 12.2 – 18.3 in.·lbf)
	Reused bearing	0.6 – 1.0 N·m (6 – 10 kgf·cm, 5.2 – 8.7 in.·lbf)
	Total preload (at starting)	Drive pinion preload plus 0.4 – 0.6 N·m (4 – 6 kgf·cm, 3.5 – 5.2 in.·lbf)
	Drive pinion to ring gear backlash	0.13 – 0.18 mm (0.0051 – 0.0071 in.)
	Side gear backlash	0 05 – 0.20 mm (0.0020 – 0.0079 in.)
	Ring gear runout Max.	0.07 mm (0.0028 in.)
	Differential case runout Max.	0.07 mm (0.0028 in.)
	Drive pinion oil seal drive in depth	1.5 mm (0.059 in.)
	Side gear thrust washer thickness	1.0 mm (0.039 in.)
		1.1 mm (0.043 in.)
		1.2 mm (0.047 in.)
		1.3 mm (0.051 in.)
	Drive pinion bearing washer thickness	2.24 mm (0.0882 in.)
		2.27 mm (0.0894 in.)
		2.30 mm (0.0906 in.)
		2.33 mm (0.0917 in.)
		2.36 mm (0.0929 in.)
		2.39 mm (0.0941 in.)
		2.42 mm (0.0953 in.)
		2.45 mm (0.0965 in.)
		2.48 mm (0.0976 in.)
		2.51 mm (0.0988 in.)
		2.54 mm (0.1000 in.)
		2.57 mm (0.1012 in.)
		2.60 mm (0.1024 in.)
		2.63 mm (0.1035 in.)
		2.66 mm (0.1047 in.)
		2.69 mm (0.1059 in.)
		2.72 mm (0.1071 in.)
Rear differential (3RZ–FE, 5VZ–FE w/o Diff. lock)	Companion flange vertical runout Max.	0.09 mm (0.0035 in.)
	Companion flange lateral runout Max.	0.09 mm (0.0035 in.)

Rear differential (3RZ–FE, 5VZ–FE w/o Diff. lock, cont'd)	Drive pinion preload (at starting) New bearing Reused bearing	1.1 – 1.7 N·m (12 – 18 kgf·cm, 10.0 – 15.2 in.·lbf) 0.6 – 0.9 N·m (7 – 10 kgf·cm, 5.7 – 8.3 in.·lbf)
	Total preload (at starting)	Drive pinion preload plus 0.4 – 0.6 N·m (4 – 6 kgf·cm, 3.5 – 5.2 in.·lbf)
	Drive pinion to ring gear backlash	0.13 – 0.18 mm (0.0051 – 0.0071 in.)
	Side gear backlash	0 05 – 0.20 mm (0.0020 – 0.0079 in.)
	Ring gear runout Max.	0.05 mm (0.0020 in.)
	Differential case runout Max.	0.04 mm (0.0016 in.)
	Drive pinion oil seal drive in depth	0.5 mm (0.020 in.)
	Side gear thrust washer thickness	1.50 mm (0.0590 in.)
		1.55 mm (0.0610 in.)
		1.60 mm (0.0630 in.)
		1.65 mm (0.0650 in.)
		1.70 mm (0.0669 in.)
		1.75 mm (0.0689 in.)
		1.80 mm (0.0709 in.)
		1.85 mm (0.0728 in.)
		1.90 mm (0.0748 in.)

Rear differential (3RZ–FE, 5VZ–FE w/o Diff. lock, cont'd)	Side bearing adjusting washer thickness	58	2.58 mm (0.1015 in.)
		60	2.60 mm (0.1024 in.)
		62	2.62 mm (0.1031 in.)
		64	2.64 mm (0.1039 in.)
		66	2.66 mm (0.1047 in.)
		68	2.68 mm (0.1055 in.)
		70	2.70 mm (0.1063 in.)
		72	2.72 mm (0.1071 in.)
		74	2.74 mm (0.1079 in.)
		76	2.76 mm (0.1087 in.)
		78	2.78 mm (0.1094 in.)
		80	2.80 mm (0.1102 in.)
		82	2.82 mm (0.1110 in.)
		84	2.84 mm (0.1118 in.)
		86	2.86 mm (0.1126 in.)
		88	2.88 mm (0.1134 in.)
		90	2.90 mm (0.1142 in.)
		92	2.92 mm (0.1150 in.)
		94	2.94 mm (0.1157 in.)
		96	2.96 mm (0.1165 in.)
		98	2.98 mm (0.1173 in.)
		00	3.00 mm (0.1181 in.)
		02	3.02 mm (0.1189 in.)
		04	3.04 mm (0.1197 in.)
		06	3.06 mm (0.1205 in.)
		08	3.08 mm (0.1213 in.)
		10	3.10 mm (0.1220 in.)
		12	3.12 mm (0.1228 in.)
		14	3.14 mm (0.1236 in.)
		16	3.16 mm (0.1244 in.)
		18	3.18 mm (0.1252 in.)
		20	3.20 mm (0.1260 in.)
		22	3.22 mm (0.1268 in.)
		24	3.24 mm (0.1276 in.)
		26	3.26 mm (0.1283 in.)
		28	3.28 mm (0.1291 in.)
		30	3.30 mm (0.1299 in.)
		32	3.32 mm (0.1307 in.)
		34	3.34 mm (0.1315 in.)
		36	3.36 mm (0.1323 in.)
		38	3.38 mm (0.1331 in.)
		40	3.40 mm (0.1339 in.)
		42	3.42 mm (0.1346 in.)
		44	3.44 mm (0.1354 in.)
		46	3.46 mm (0.1362 in.)
		48	3.48 mm (0.1370 in.)

Rear differential (3RZ–FE, 5VZ–FE w/o Diff. lock, cont'd)	Drive pinion bearing adjusting washer thickness	87	1.87 mm (0.0736 in.)
		88	1.88 mm (0.0740 in.)
		89	1.89 mm (0.0744 in.)
		90	1.90 mm (0.0748 in.)
		91	1.91 mm (0.0752 in.)
		92	1.92 mm (0.0756 in.)
		93	1.93 mm (0.0760 in.)
		94	1.94 mm (0.0764 in.)
		95	1.95 mm (0.0768 in.)
		96	1.96 mm (0.0772 in.)
		97	1.97 mm (0.0776 in.)
		98	1.98 mm (0.0780 in.)
		99	1.99 mm (0.0783 in.)
		00	2.00 mm (0.0787 in.)
		01	2.01 mm (0.0791 in.)
		02	2.02 mm (0.0795 in.)
		03	2.03 mm (0.0799 in.)
		04	2.04 mm (0.0803 in.)
		05	2.05 mm (0.0807 in.)
		06	2.06 mm (0.0811 in.)
		07	2.07 mm (0.0815 in.)
		08	2.08 mm (0.0819 in.)
		09	2.09 mm (0.0823 in.)
		10	2.10 mm (0.0827 in.)
		11	2.11 mm (0.0831 in.)
		12	2.12 mm (0.0835 in.)
		13	2.13 mm (0.0839 in.)
		14	2.14 mm (0.0843 in.)
		15	2.15 mm (0.0846 in.)
		16	2.16 mm (0.0850 in.)
		17	2.17 mm (0.0854 in.)
		18	2.18 mm (0.0858 in.)
		19	2.19 mm (0.0862 in.)
		20	2.20 mm (0.0866 in.)
		21	2.21 mm (0.0870 in.)
		22	2.22 mm (0.0874 in.)
		23	2.23 mm (0.0878 in.)
		24	2.24 mm (0.0882 in.)
		25	2.25 mm (0.0886 in.)
		26	2.26 mm (0.0890 in.)
		27	2.27 mm (0.0894 in.)
		28	2.28 mm (0.0898 in.)

Rear differential (3RZ–FE, 5VZ–FE w/ Diff. lock)	Companion flange vertical runout Max.	0.10 mm (0.0039 in.)
	Companion horizontal lateral runout Max.	0.10 mm (0.0039 in.)
	Drive pinion preload (at starting) New bearing	0.9 – 1.6 N·m (10 – 16 kgf·cm, 8.7 – 13.9 in.·lbf)
	Reused bearing	0.5 – 0.8 N·m (5 – 8 kgf·cm, 4.3 – 6.9 in.·lbf)
	Total preload (at starting)	Drive pinion preload plus 0.4 – 0.6 N·m (4 – 6 kgf·cm, 3.5 – 5.2 in.·lbf)
	Drive pinion to ring gear backlash	0.13 – 0.18 mm (0.0051 – 0.0071 in.)
	Side gear backlash	0 05 – 0.20 mm (0.0020 – 0.0079 in.)
	Ring gear runout Max.	0.10 mm (0.0039 in.)
	Differential case runout Max.	0.07 mm (0.0028 in.)
	Drive pinion oil seal drive in depth	1.0 mm (0.039 in.)
	Diff. lock shift fork to sleeve clearance	0.15 – 0.35 mm (0.006 – 0.014 in.)
	Side gear thrust washer thickness	0.9 mm (0.035 in.)
		1.0 mm (0.039 in.)
		1.1 mm (0.043 in.)
		1.2 mm (0.047 in.)
		1.3 mm (0.051 in.)
	Drive pinion bearing adjusting washer thickness	1.70 mm (0.0669 in.)
		1.73 mm (0.0681 in.)
		1.76 mm (0.0693 in.)
		1.79 mm (0.0705 in.)
		1.82 mm (0.0717 in.)
		1.85 mm (0.0728 in.)
		1.88 mm (0.0740 in.)
		1.91 mm (0.0752 in.)
		1.94 mm (0.0764 in.)
		1.97 mm (0.0776 in.)
		2.00 mm (0.0787 in.)
		2.03 mm (0.0799 in.)
		2.06 mm (0.0811 in.)
		2.09 mm (0.0823 in.)
		2.12 mm (0.0835 in.)
		2.15 mm (0.0846 in.)
		2.18 mm (0.0858 in.)
		2.21 mm (0.0870 in.)
		2.24 mm (0.0882 in.)
		2.27 mm (0.0894 in.)
		2.30 mm (0.0906 in.)
		2.33 mm (0.0917 in.)

SS052–07

TORQUE SPECIFICATION

Part tightened	N·m	kgf·cm	ft·lbf
Front (2WD):			
Axle hub x Disc	64	650	47
Hub nut	110	1,150	83
Tie rod end lock nut	54	550	40
Steering knuckle x Upper ball joint	110	1,100	80
Steering knuckle x Lower ball joint	160	1,600	116
Tie rod end x Lower ball joint	72	730	53
Steering knuckle x Dust cover	8.3	85	74 in.·lbf
Steering knuckle x Brake caliper	108	1,100	80
Upper suspension arm x Upper ball joint	39	400	29
Lower suspension arm x Spring bumper	43	440	32
Lower suspension arm x Lower suspension arm No. 3	150	1,530	111
Shock absorber x Frame	25	250	18
Lower suspension arm x Shock absorber	39	400	29
Stabilizer bar link x Stabilizer bar	29.5	300	22
Stabilizer bar link x Lower suspension arm	90	920	66
Lower suspension arm x Frame	200	2,050	148
Upper suspension arm shaft x Frame	130	1,300	94
Upper suspension arm shaft x Upper suspension arm	125	1,270	92
Lower suspension arm x Lower ball joint	110	1,100	80
Lower suspension arm x Strut bar	150	1,530	111
Strut bar x Frame	300	3,050	221
Stabilizer bar bracket x Frame	29	300	22
ABS speed sensor x Steering knuckle	8.0	82	71 in.·lbf
ABS speed sensor wire clamp x Steering knuckle	8.0	82	71 in.·lbf
ABS speed sensor wire clamp x Upper suspension arm	8.0	82	71 in.·lbf
Front (4WD and pre runner):			
Hub nut	110	1,150	83
Tie rod end lock nut	55	560	41
Steering knuckle x Lower ball joint	80	820	59
Tie rod end x Lower ball joint	90	930	67
Steering knuckle x Brake caliper	123	1,250	90
Steering knuckle x Dust cover	18	185	13
Flexible hose x Brake caliper	30	310	22
Drive shaft x Axle hub	235	2,400	174
Upper suspension arm x Upper ball joint	105	1,100	80
Lower suspension arm x Frame	130	1,325	96
Lower suspension arm x Lower ball joint	140	1,450	103
Lower suspension arm x No. 1, No. 2 spring bumper	31 (23)	315 (235)	23 (17)
Upper suspension arm x Frame	115	1,200	87
Frame x Suspension support	64	650	47
Shock absorber x Suspension support	29	300	22

( ) For use with SST

Part tightened		N·m	kgf·cm	ft·lbf
Lower suspension arm x Shock absorber		135	1,400	101
Stabilizer bar link x Stabilizer bar		69	700	51
Stabilizer bar link x Lower suspension arm		90	920	66
Stabilizer bar bracket x Frame		25	260	19
ABS speed sensor x Steering knuckle		8.0	82	71 in.·lbf
ABS speed sensor wire clamp x Steering knuckle		8.0	82	71 in.·lbf
ABS speed sensor wire clamp x Upper suspension arm		8.0	82	71 in.·lbf
Front differential				
Drive pinion x Companion flange		See page SA–55		
Differential front mounting cushion x Frame		137	1,400	101
Differential rear mounting cushion x Frame		87	890	64
Differential front mounting cushion x Differential		157	1,600	116
Differential rear mounting cushion x Differential		108	1,100	80
Ring gear x Differential case		97	985	71
Differential carrier x Differential tube		78	800	58
Differential carrier x Side bearing retainer		69	700	51
Differential x Front propeller shaft		74	750	54
A.D.D. clutch case x Differential		78	800	58
A.D.D. clutch case x Differential tube		78	800	58
A.D.D. actuator x A.D.D. clutch case		21	210	15
Differential carrier x Tube		13	130	9
Drain plug		65	660	48
Filler plug		39	400	29
Rear:				
Hub nut		110	1,150	83
Axle housing x Backing plate		68	700	50
Parking brake cable x Backing plate	2WD	9.3	95	82 in.·lbf
Parking brake cable clamp set bolt	2WD	26	260	19
Shock absorber x Spring seat	2WD	26	260	19
	4WD and pre runner	71	730	53
Shock absorber x Frame	2WD	26	260	19
	4WD and pre runner	71	730	53
Brake line union nut		15	155	11
U–bolt x Spring seat		123	1,250	90
Leaf spring hanger pin bolt x Frame		157	1,600	116
Shackle pin x Leaf spring		92	930	67
Shackle pin x Frame		92	930	67
Leaf spring center bolt		44	450	33
Spring bumper x Frame	2WD only	29	300	22
ABS speed sensor x Axle housing		8.0	82	71 in.·lbf
Rear differential (2RZ–FE)				
Differential x Propeller shaft		74	750	56
Differential carrier x Axle housing		25	250	18
Differential carrier x Bearing cap		85	870	63
Differential case x Ring gear		97	985	71

Part tightened	N·m	kgf·cm	ft·lbf
Drive pinion x Companion flange	See page SA–149		
Adjusting nut lock x Bearing cap	13	130	9
Drain plug, Filler plug	49	500	36
Rear differential (3RZ–FE, 5VZ–FE, w/o Diff. lock)			
Differential x Propeller shaft	74	750	56
DIfferential carrier x Axle housing	73	740	54
Differential carrier x Bearing cap	113	1,150	83
Drive pinion x Companion flange	See page SA–166		
Differential case x Ring gear	125	1,270	92
Drain plug, Filler plug	49	500	36
Rear differential (3RZ–FE, 5VZ–FE w/ Diff. lock)			
Differential x Propeller shaft	74	750	56
Differential carrier x Axle housing	25	250	18
Differential carrier x Bearing cap	78	800	58
Differential case x Ring gear	97	985	71
Adjusting nut lock x Bearing cap	13	130	9
Differential RH case x Differential LH case	47	480	35
Differential carrier x Diff. lock indicator switch	40	410	31
Differential carrier x Shaft retainer	24	240	17
Drive pinion x Companion flange	See page SA–185		
Differential carrier x Screw plug	22	220	16
DIfferential carrier x Actuator	26	270	20
Drain plug, Filler plug	49	500	36

SFI (2RZ–FE, 3RZ–FE)

SS112–04

SERVICE DATA

Fuel pressure regulator	Fuel pressure	at no vacuum	265 – 304 kPa (2.7 – 3.1 kgf/cm^2, 38 – 44 psi)
Fuel pump	Resistance	at 20°C (68°F)	0.2 – 3.0 Ω
Injector	Resistance	at 20°C (68°F)	12 – 16 Ω
	Injection volume		71 – 86 cm^3 (4.3 – 5.3 cu in.) per 15 seconds
	Difference between each cylinder		15 cm^3 (1.0 cu in.) or less
	Fuel leakage		1 drop or less per 12 minutes
MAF meter	Resistance (THA – E3)	at –20°C (–4°F)	10 – 20 kΩ
		at 0°C (32°F)	4 – 7 kΩ
		at 20°C (68°F)	2 – 3 kΩ
		at 40°C (104°F)	0.9 – 1.3 kΩ
		at 60°C (140°F)	0.4 – 0.7 kΩ
		at 80°C (176°F)	0.2 – 0.4 kΩ
Throttle body	Throttle valve fully closed angle		6°
	Throttle opener setting speed		1,200 – 1,500 rpm
Throttle position sensor	Clearance between stop screw and lever		
	0 mm (0 in.)	VTA – E2	0.2 – 5.7 kΩ
	Throttle valve fully open	VTA – E2	2.0 – 10.2 kΩ
	–	VC – E2	2.5 – 5.9 kΩ
IAC valve	Resistance (+B – RSC or RSO)	at cold	17.0 – 24.5 Ω
		at hot	21.5 – 28.5 Ω
ECT sensor	Resistance	at –20°C (–4°F)	10 – 20 kΩ
		at 0°C (32°F)	4 – 7 kΩ
		at 20°C (68°F)	2 – 3 kΩ
		at 40°C (104°F)	0.9 – 1.3 kΩ
		at 60°C (140°F)	0.4 – 0.7 kΩ
		at 80°C (176°F)	0.2 – 0.4 kΩ
Vapor pressure sensor	Power source voltage		4.5 – 5.5 V
VSV for EVAP	Resistance	at 20°C (68°F)	30 – 34 Ω
VSV for CCV	Resistance	at 20°C (68°F)	25 – 30 Ω
		at 120°C (248°F)	33 – 42 Ω
VSV for pressure switching valve	Resistance	at 20°C (68°F)	30 – 36 Ω
VSV for vapor pressure sensor	Resistance	at 20°C (68°F)	37 – 44 Ω
VSV for EGR	Resistance	at 20°C (68°F)	33 – 39 Ω
EGR gas temp. sensor	Resistance	at 50°C (122°F)	64 – 97 kΩ
		at 100°C (212°F)	11 – 16 kΩ
		at 150°C (302°F)	2 – 4 kΩ
A/F sensor	Heater coil resistance		
	Bank 1 Sensor 1	at 20°C (68°F)	0.8 – 1.4 Ω
		at 800°C (1,472°F)	1.8 – 3.2 Ω
Heated oxygen sensor	Heater coil resistance		
	Bank 1 Sensor 1	at 20°C (68°F)	11 – 16 Ω
	Bank 1 Sensor 2	at 20°C (68°F)	11 – 16 Ω
Fuel cut RPM	Fuel return rpm	M/T	1,400 rpm
		A/T	1,500 rpm

SS113–05

TORQUE SPECIFICATION

Part tightened	N·m	kgf·cm	ft·lbf
Fuel line (Union bolt type)	29	300	22
Fuel line (Flare nut type) w/ SST	26	262	19
Fuel pump bracket assembly x Fuel tank	3.5	36	31 in.·lbf
Fuel pressure regulator x Delivery pipe	8.8	90	78 in.·lbf
Fuel inlet pipe x Fuel filter	29	300	22
Delivery pipe x Cylinder head	21	210	15
Fuel inlet pipe x Delivery pipe	29	300	22
Throttle body x Air intake chamber	20	200	14
Fuel evaporation vent tube x Fuel tank	1.5	15	13 in.·lbf
Fuel tank filler pipe x Fuel tank	3.5	35	31 in.·lbf
Fuel tank filler pipe support bracket	29	300	22
Fuel tank x Body	29	300	22
Fuel tank band x Body	62	632	46
Fuel tank protector bracket x Body	30	306	22
Fuel tank protector x Fuel tank	30	306	22
MAF meter x Air cleaner cap	8.5	85	74 in.·lbf
ECT sensor x Cylinder head	20	200	14
Knock sensor x Cylinder block	44	450	33
Fuel filter x Cylinder block	20	200	14
A/F sensor (Bank 1 sennsor 1) x No.1 exhaust pipe with TWC	20	200	14
Heated oxygen sensor (Bank 1 sensor 2) x Tail pipe	20	200	14

SFI (5VZ–FE)

SERVICE DATA

SS00U–14

Fuel pressure regulator	Fuel pressure	at no vacuum	265 – 304 kPa (2.7 – 3.1 kgf/cm^2, 38 – 44 psi)
Fuel pump	Resistance	at 20°C (68°F)	0.2 – 3.0 Ω
Injector	Resistance Injection volume Difference between each cylinder Fuel leakage		Approx. 13.8 Ω 56 – 69 cm^3 (3.4 – 4.2 cu in.) per 15 sec. 1.3 cm^3 (0.08 cu in.) or less 1 drop or less per 12 minutes
MAF meter	Resistance (THA – E2)	at –20°C (–4°F) at 20°C (68°F) at 60°C (140°F)	13.6 – 18.4 kΩ 2.2 – 2.7 kΩ 0.5 – 0.7 kΩ
Throttle body (w/o ETCS–i)	Throttle valve fully closed angle DP setting speed (M/T) Throttle opener setting speed		10° 1,800 – 2,200 rpm 900 – 1,950 rpm
Throttle position sensor (w/ ETCS–i)	Resistance (VC – E2)	at 20°C (68°F)	1.2 – 3.2 kΩ
Throttle position sensor (w/o ETCS–i)	Clearance between stop screw and lever 0 mm (0 in.) Throttle valve fully open Throttle valve fully open	 VTA – E2 VTA – E2 VC – E2	 0.28 – 6.4 kΩ 2.0 – 11.6 kΩ 2.7 – 7.7 kΩ
Throttle control motor (w/ ETCS–i)	Resistance Motor resistance(M+ – M–) Clutch resistance (CL+ – CL–)	 at 20°C (68°F) at 20°C (68°F)	 0.3 – 300 Ω 4.2 – 5.2 Ω
Accelerator pedal position sensor (w/ ETCS–i)	Resistance(VC – E2)	at 20°C (68°F)	1.2 – 3.2 kΩ
IAC valve (w/o ETCS–i)	Resistance (+B – RSO or RSC)	at cold at hot	17.0 – 24.5 Ω 21.5 – 28.5 Ω
VSV for EVAP	Resistance	at 20°C (68°F)	30 – 34 Ω
VSV for CCV	Resistance	at 20°C (68°F) at 120°C (248°F)	25 – 30 Ω 33 – 42 Ω
VSV for pressure switching valve	Resistance	at 20°C (68°F)	30 – 36 Ω
VSV for vapor pressure sensor	Resistance	at 20°C (68°F)	37 – 44 Ω
ECT sensor	Resistance	at –20°C (–4°F) at 0°C (32°F) at 20°C (68°F) at 40°C (104°F) at 60°C (140°F) at 80°C (176°F)	10 – 20 kΩ 4 – 7 kΩ 2 – 3 kΩ 0.9 – 1.3 kΩ 0.4 – 0.7 kΩ 0.2 – 0.4 kΩ
Heated oxygen sensor	Heater resistance	at 20°C (68°F)	11 – 16 Ω
Vapor pressure sensor	Voltage(VC – E2)		4.5 – 5.5 V
Fuel cut rpm	Fuel return rpm	M/T A/T	1,000 rpm 1,200 rpm

SS00V–14

TORQUE SPECIFICATION

Part tightened	N·m	kgf·cm	ft·lbf
Fuel line (Union bolt type)	34.3	350	25
Fuel line (Flare nut type) using SST	24	245	18
Fuel inlet pipe x Intake manifold	8	80	71 in.·lbf
Fuel pressure regulator x LH delivery pipe	8	80	71 in.·lbf
Delivery pipe x Intake manifold	13	130	10
Fuel pump bracket assembly x Fuel tank	3.5	35	30 in.·lbf
Fuel pipe x Body	20	200	14
Fuel tank band x Body	40	410	30
Fuel tank protector x Fuel tank, Body	30	310	22
Fuel tube clamp bracket x Fuel tank	5.5	55	48 in.·lbf
Fuel tank filler pipe x Fuel tank	3	30	27 in.·lbf
Fuel evaporation vent tube x Fuel tank	1.5	15	13 in.·lbf
Fuel pressure regulator x LH delivery pipe	8	80	71 in.·lbf
MAF meter x Air cleaner cap	6.9	72	61 in.·lbf
Throttle body (w/ ETCS–i) x Air intake chamber	18	180	13
Throttle body (w/o ETCS–i) x Air intake chamber	18	180	13
ECT sensor x Intake manifold	20	200	14
Knock sensor x Cylinder block	39	400	29
A/F sensor (Bank 1 sensor 1) x No.1 exhaust pipe with TWC	20	200	14
Heated oxygen sensor (Bank 1 sensor 2) x Tail pipe	20	200	14

STEERING

SS055–06

SERVICE DATA

DRIVE BELT		
Drive belt tension	New belt	135–180 lbf
Drive belt tension	Used belt	85–120 lbf
POWER STEERING FLUID		
Oil level rise	Maximum	Below 5 mm (0.20 in.)
Oil pressure at idle speed with valve closed	Minimum	8,336 kPa (85 kgf/cm^2, 1,209 psi)
STEERING WHEEL		
Steering wheel freeplay	Maximum	30 mm (1.18 in.)
Steering effort at idle speed	Maximum	4.9 N·m (50 kgf·cm, 43 in.·lbf)
PS VANE PUMP		
2RZ–FE and 3RZ–FE:		
Pump shaft and front housing bushing oil clearance	STD	0.03–0.05 mm (0.0012–0.0020 in.)
Pump shaft and front housing bushing oil clearance	Maximum	0.07 mm (0.0028 in.)
Vane plate height	Minimum	8.6 mm (0.339 in.)
Vane plate thickness	Minimum	1.397 mm (0.05500 in.)
Vane plate length	Minimum	14.991 mm (0.59020 in.)
Vane plate and pump rotor groove clearance	Maximum	0.035 mm (0.0014 in.)
Vane plate length	Pump rotor and cam ring mark	
	None	14.999–15.001 mm (0.59051–0.59059 in.)
	1	14.997–14.999 mm (0.59043–0.59051 in.)
	2	14.995–14.997 mm (0.59035–0.59043 in.)
	3	14.993–14.995 mm (0.59027–0.59035 in.)
	4	14.991–14.993 mm (0.59020–0.59027 in.)
Flow control valve spring length	Minimum	33.2 mm (1.307 in.)
Pump rotating torque	Maximum	0.28 N·m (2.8 kgf·cm, 2.4 in.·lbf) or less
5VZ–FE:		
Pump shaft and front housing bushing oil clearance	STD	0.03–0.05 mm (0.0012–0.0020 in.)
Pump shaft and front housing bushing oil clearance	Maximum	0.07 mm (0.0028 in.)
Vane plate height	Minimum	8.6 mm (0.339 in.)
Vane plate thickness	Minimum	1.397 mm (0.05500 in.)
Vane plate length	Minimum	14.991 mm (0.59020 in.)
Vane plate and pump rotor groove clearance	Maximum	0.035 mm (0.0014 in.)
Vane plate length	Pump rotor and cam ring mark	
	None	14.999–15.001 mm (0.59051–0.59059 in.)
	1	14.997–14.999 mm (0.59043–0.59051 in.)
	2	14.995–14.997 mm (0.59035–0.59043 in.)
	3	14.993–14.995 mm (0.59027–0.59035 in.)
	4	14.991–14.993 mm (0.59020–0.59027 in.)
Flow control valve spring length	Minimum	33.2 mm (1.307 in.)
Pump rotating torque	Maximum	0.27 N·m (2.8 kgf·cm, 2.4 in.·lbf) or less
PS GEAR		
2WD:		
Steering rack runout	Maximum	0.3 mm (0.0118 in.)

Total preload	Turning	0.9–1.5 N·m (9–15 kgf·cm, 7.8–13.0 in.·lbf)
4WD and Pre runner:		
Steering rack runout	Maximum	0.3 mm (0.0118 in.)
Total preload	Turning	0.5–1.7 N·m (4.7–17.2 kgf·cm, 4.1–14.9 in.·lbf)

SS056–03

TORQUE SPECIFICATION

Part tightened		N·m	kgf·cm	ft·lbf
STEERING COLUMN				
Steering wheel set nut		50	500	35
Steering wheel pad set screw (Torx screw)		9.0	90	78 in.·lbf
Steering column assembly set nut and bolt		26	260	19
Main shaft assembly x Universal joint No.2		35	360	26
Universal joint No.2 x Intermediate No.2 shaft		35	360	26
Control valve shaft x Intermediate No.2 shaft		35	360	26
Column hole cover x Body	2WD	8.0	80	69 in.·lbf
Column hole cover No.2 x Column hole cover x Body	4WD	8.0	80	69 in.·lbf
TILT STEERING COLUMN				
Tilt steering bolt		20	200	14
PS VANE PUMP				
2RZ–FE, 3RZ–FE and 5VZ–FE:				
Union bolt x Pressure feed tube		47	475	34
Pressure port union x Pump housing		83	850	61
Bracket x Pump assembly	5VZ–FE	43	440	32
Oil reservoir set bolt	Front	13	130	9
	Rear	24	240	17
Vane pump pulley set nut		43	440	32
Oil pressure switch x Pressure feed tube	5VZ–FE	21	210	15
Vane pump assembly with bracket set bolt and nut	5VZ–FE	43	440	32
Vane pump assembly set bolt	2RZ–FE, 3RZ–FE	39	400	29
Rear housing set bolt		24	240	17
Power steering idle pulley set nut		39	400	29
PS GEAR				
2WD:				
Self–locking nut		25	250	18
Rack housing cap		59	600	43
Control valve housing set bolt		18	185	13
Rack guide spring cap lock nut		50 (60)	513 (700)	37 (51)
Rack housing No.2 bracket set bolt		61	620	45
Rack x Rack end		60 (83)	615 (850)	45 (61)
Tie rod end lock nut		54	550	40
Turn pressure tube union nut		12 (13)	122 (130)	9 (9)
PS gear assembly set bolt		201	2,050	148
Pressure feed tube x Control valve housing		33 (45)	337 (450)	24 (33)
Return tube x Control valve housing		36 (49)	365 (500)	26 (36)
4WD and Pre runner:				
Cylinder end stopper		59 (78)	597 (800)	43 (58)
Rack guide spring cap lock nut		51 (69)	521 (700)	38 (51)
Rack x Rack end		76 (103)	770 (1,050)	56 (76)
Tie rod end lock nut		55	560	41

( ): For use without SST

Part tightened	N·m	kgf·cm	ft·lbf
4WD and Pre runner:			
Turn pressure tube union nut	23 (25)	235 (250)	17 (18)
PS gear assembly set bolt	167	1,700	123
PS gear assembly set bolt x nut	191	1,950	141
Bracket x Body	167	1,700	123
Pressure feed tube x Control valve housing	33 (45)	337 (450)	24 (33)
Return tube x Control valve housing	36 (49)	365 (500)	26 (36)
Control valve housing set bolt	18	185	13
Bearing guide nut	25	250	18

( ): For use without SST

STARTING (2RZ–FE, 3RZ–FE)

SS04B–01

SERVICE DATA

Starter (1.4 kW type)	Rated voltage and output power		12 V 1.4 kW
	No–load characteristics	Current	90 A or less at 11.5 V
		rpm	3,000 rpm or more
	Brush length	STD	15.5 mm (0.610 in.)
		Minimum	10.0 mm (0.394 in.)
	Spring installed load	STD	17.6 – 23.5 N (1.79 – 2.41 kgf, 3.9 – 5.3 lbf)
		Minimum	11.8 N (1.2 kgf, 2.6 lbf)
	Commutator		
	Diameter	STD	30 mm (1.18 in.)
		Minimum	29 mm (1.14 in.)
	Undercut depth	STD	0.6 mm (0.024 in.)
		Minimum	0.2 mm (0.008 in.)
	Circle runout	Maximum	0.05 mm (0.0020 in.)
	Magnetic switch		
	Contact plate for wear	Maximum	0.9 mm (0.035 in.)
Starter (2.0 kW type)	Rated voltage and output power		12 V 2.0 kW
	No–load characteristics	Current	100 A or less at 11.5 V
		rpm	2,500 rpm or more
	Brush length	STD	15.0 mm (0.591 in.)
		Minimum	9.0 mm (0.355 in.)
	Spring installed load	STD	21.5 – 27.5 N (2.19 – 2.81 kgf, 4.9 – 6.2 lbf)
		Minimum	12.7 N (1.3 kgf, 2.7 lbf)
	Commutator		
	Diameter	STD	35 mm (1.38 in.)
		Minimum	34 mm (1.34 in.)
	Undercut depth	STD	0.7 mm (0.028 in.)
		Minimum	0.2 mm (0.008 in.)
	Circle runout	Maximum	0.05 mm (0.0020 in.)
	Magnetic switch		
	Contact plate for wear	Maximum	0.9 mm (0.035 in.)
	Field coil resistance	At 20˚C (68˚F)	1.5 – 1.9 Ω

SS04C–01

TORQUE SPECIFICATION

Part tightened		N·m	kgf·cm	ft·lbf
Starter mounting bolt		39	400	29
Starter wire mounting nut		8.8	90	78 in.·lbf
Field frame x Armature	1.4 kW	5.9	60	52 in.·lbf
	2.0 kW	9.3	93	82 in.·lbf
Starter housing x Clutch assembly	1.4 kW	5.9	60	52 in.·lbf
	2.0 kW	9.3	93	82 in.·lbf
End cover x Field frame	1.4 kW	1.5	15	13 in.·lbf
	2.0 kW	3.8	38	34 in.·lbf
Lead wire x Terminal C		5.9	60	52 in.·lbf
Terminal nut x Terminal 30 of starter		17	170	12
Terminal nut x Terminal C of starter		17	170	12
Magnetic switch end cover x Magnetic switch	1.4 kW	2.5	26	23 in.·lbf
	2.0 kW	3.6	37	32 in.·lbf

STARTING (5VZ–FE)

SS01A–07

SERVICE DATA

Starter (1.4 kW)	Rated voltage and output power		12 V 1.4 kW
	No–load characteristics	Current	90 A or less at 11.5 V
		rpm	3,000 rpm or more
	Brush length	STD	15.5 mm (0.610 in.)
		Minimum	10.0 mm (0.394 in.)
	Spring installed load	STD	17.6 – 23.5 N (1.80 – 2.40 kgf, 4.0 – 5.3 lbf)
		Minimum	11.8 N (1.20 kgf, 2.6 lbf)
	Commutator		
	Diameter	STD	30 mm (1.180 in.)
		Minimum	29 mm (1.140 in.)
	Undercut depth	STD	0.6 mm (0.024 in.)
		Minimum	0.2 mm (0.008 in.)
	Circle runout	Maximum	0.05 mm (0.0020 in.)
	Magnetic switch		
	Contact plate for wear	Maximum	0.9 mm (0.035 in.)
Starter (1.8 kW)	Rated voltage and output power		12 V 1.8 kW
	No–load characteristics	Current	100 A or less at 11.5 V
		rpm	2,500 rpm or more
	Shunt coil resistance	at 20°C (68°F)	1.4 – 1.9 Ω
	Brush length	STD	15.0 mm (0.591 in.)
		Minimum	9.0 mm (0.354 in.)
	Spring installed load	STD	21.5 – 27.5 N (2.20 – 2.80 kgf, 4.9 – 6.2 lbf)
		Minimum	12.7 N (1.30 kgf, 2.7 lbf)
	Commutator		
	Diameter	STD	35 mm (1.378 in.)
		Minimum	34 mm (1.339 in.)
	Undercut depth	STD	0.7 mm (0.028 in.)
		Minimum	0.2 mm (0.008 in.)
	Circle runout	Maximum	0.05 mm (0.0020 in.)
	Magnetic switch		
	Contact plate for wear	Maximum	0.9 mm (0.035 in.)

SS01B–01

TORQUE SPECIFICATION

Part tightened		N·m	kgf·cm	ft·lbf
Starter wire x Starer		8.8	90	78 in.·lbf
Starter x Transaxle		39	400	29
Lead wire x Terminal C of starter		5.9	60	52 in.·lbf
Field frame, Magnetic switch x Starter housing	1.4 kW	5.9	60	52 in.·lbf
	1.8 kW	9.3	95	82 in.·lbf
End cover x Field frame	1.4 kW	1.5	15	13 in.·lbf
	1.8 kW	3.8	39	34 in.·lbf
Terminal nut x Terminal C of starter		17	170	12
Terminal nut x Terminal 30 of starter		17	170	12
Magnetic switch end cover x Magnetic switch	1.4 kW	2.5	26	23 in.·lbf
	1.8 kW	3.6	37	32 in.·lbf

STANDARD BOLT

HOW TO DETERMINE BOLT STRENGTH

SS0ZS–01

Bolt Type				Class
Hexagon Head Bolt		Stud Bolt	Weld Bolt	
Normal Recess Bolt	Deep Recess Bolt			
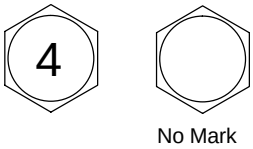 No Mark	 No Mark	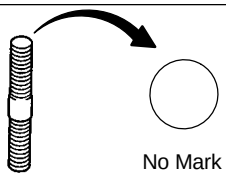 No Mark	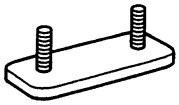	4T
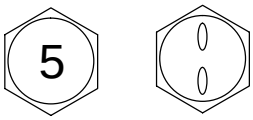	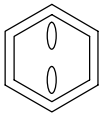			5T
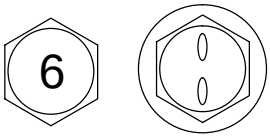 w/ Washer	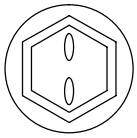 w/ Washer			6T
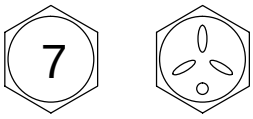	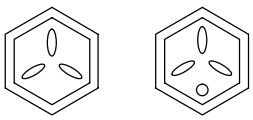			7T
				8T
				9T
	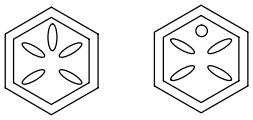			10T
	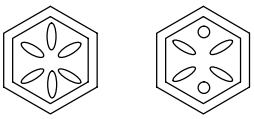			11T

B06431

SS0ZU–01

HOW TO DETERMINE NUT STRENGTH

Nut Type			Class
Present Standard Hexagon Nut	Old Standard Hexagon Nut		
	Cold Forging Nut	Cutting Processed Nut	
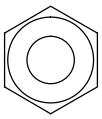 No Mark			4N
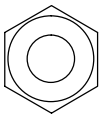 No Mark (w/ Washer)	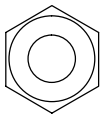 No Mark (w/ Washer)	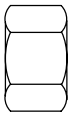 No Mark	5N (4T)
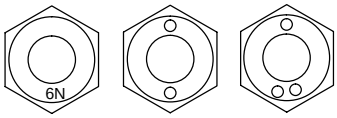 6N			6N
	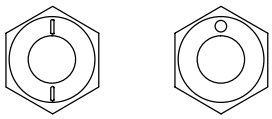	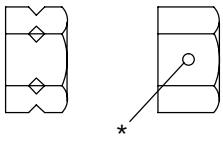 *	7N (5T)
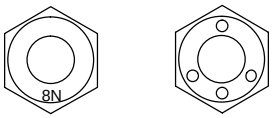 8N			8N
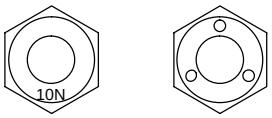 10N	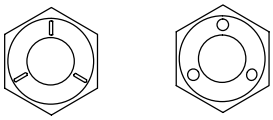	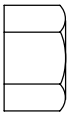 No Mark	10N (7T)
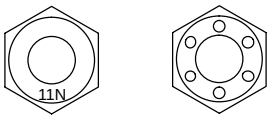 11N			11N
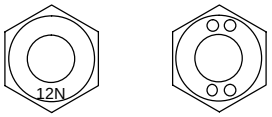 12N			12N

*: Nut with 1 or more marks on one side surface of the nut.

B06432

HINT:

Use the nut with the same number of the nut strength classification or the greater than the bolt strength classification number when tightening parts with a bolt and nut.

Example: Bolt = 4T

Nut = 4N or more

SS0ZT–01

SPECIFIED TORQUE FOR STANDARD BOLTS

Class	Diameter mm	Pitch mm	Specified torque					
			Hexagon head bolt			Hexagon flange bolt		
			N·m	kgf·cm	ft·lbf	N·m	kgf·cm	ft·lbf
4T	6	1	5	55	48 in.·lbf	6	60	52 in.·lbf
	8	1.25	12.5	130	9	14	145	10
	10	1.25	26	260	19	29	290	21
	12	1.25	47	480	35	53	540	39
	14	1.5	74	760	55	84	850	61
	16	1.5	115	1,150	83	–	–	–
5T	6	1	6.5	65	56 in.·lbf	7.5	75	65 in.·lbf
	8	1.25	15.5	160	12	17.5	175	13
	10	1.25	32	330	24	36	360	26
	12	1.25	59	600	43	65	670	48
	14	1.5	91	930	67	100	1,050	76
	16	1.5	140	1,400	101	–	–	–
6T	6	1	8	80	69 in.·lbf	9	90	78 in.·lbf
	8	1.25	19	195	14	21	210	15
	10	1.25	39	400	29	44	440	32
	12	1.25	71	730	53	80	810	59
	14	1.5	110	1,100	80	125	1,250	90
	16	1.5	170	1,750	127	–	–	–
7T	6	1	10.5	110	8	12	120	9
	8	1.25	25	260	19	28	290	21
	10	1.25	52	530	38	58	590	43
	12	1.25	95	970	70	105	1,050	76
	14	1.5	145	1,500	108	165	1,700	123
	16	1.5	230	2,300	166	–	–	–
8T	8	1.25	29	300	22	33	330	24
	10	1.25	61	620	45	68	690	50
	12	1.25	110	1,100	80	120	1,250	90
9T	8	1.25	34	340	25	37	380	27
	10	1.25	70	710	51	78	790	57
	12	1.25	125	1,300	94	140	1,450	105
10T	8	1.25	38	390	28	42	430	31
	10	1.25	78	800	58	88	890	64
	12	1.25	140	1,450	105	155	1,600	116
11T	8	1.25	42	430	31	47	480	35
	10	1.25	87	890	64	97	990	72
	12	1.25	155	1,600	116	175	1,800	130

TRANSFER

SS05I–01

SERVICE DATA

Transfer unit		
Hose depth	Minimum	13 mm (0.51 in.)
Oil pump body		
Body clearance	STD	0.09 – 0.16 mm (0.0035 – 0.0063 in.)
	Maximum	0.16 mm (0.0063 in.)
Tip clearance	STD	0.05 – 0.15 mm (0.0020 – 0.0059 in.)
	Maximum	0.15 mm (0.0059 in.)
Side clearance	STD	0.03 – 0.10 mm (0.0012 – 0.0039 in.)
	Maximum	0.10 mm (0.0039 in.)
Rear output shaft assembly		
Drive sprocket thrust clearance	STD	0.10 – 0.25 mm (0.0039 – 0.0098 in.)
	Maximum	0.25 mm (0.0098 in.)
Rear output shaft journal diameter		
(part A)	Minimum	27.98 mm (1.1016 in.)
(part B)	Minimum	36.98 mm (1.4561 in.)
Drive sprocket radial clearance	STD	0.010 – 0.055 mm (0.0004 – 0.0022 in.)
	Maximum	0.055 mm (0.0022 in.)
Front drive shift fork to clutch sleeve clearance	Maximum	1.0 mm (0.039 in.)
High and low shift fork to sleeve clearance	Maximum	1.0 mm (0.039 in.)
Rear output shaft snap ring thickness	Mark	
	A	2.10 – 2.15 mm (0.0827 – 0.0846 in.)
	B	2.15 – 2.20 mm (0.0846 – 0.0866 in.)
	C	2.20 – 2.25 mm (0.0866 – 0.0886 in.)
	D	2.25 – 2.30 mm (0.0886 – 0.0906 in.)
	E	2.30 – 2.35 mm (0.0906 – 0.0925 in.)
	F	2.35 – 2.40 mm (0.0925 – 0.0945 in.)
	G	2.40 – 2.45 mm (0.0945 – 0.0965 in.)
	H	2.45 – 2.50 mm (0.0965 – 0.0984 in.)
	J	2.50 – 2.55 mm (0.0984 – 0.1004 in.)
	K	2.00 – 2.05 mm (0.0787 – 0.0807 in.)
	L	2.05 – 2.10 mm (0.0807 – 0.0827 in.)

Input shaft		
Input shaft journal outer diameter	Minimum	47.59 mm (1.8736 in.)
Input shaft bushing diameter	Maximum	39.14 mm (1.5409 in.)
Synchronizer ring to sprocket clearance	STD	1.05 – 1.85 mm (0.0413 – 0.0728 in.)
	Minimum	0.80 mm (0.0315 in.)
Input shaft snap ring thickness	Mark	
	A	2.10 – 2.15 mm (0.0827 – 0.0846 in.)
	B	2.15 – 2.20 mm (0.0846 – 0.0866 in.)
	C	2.20 – 2.25 mm (0.0866 – 0.0886 in.)
	D	2.25 – 2.30 mm (0.0886 – 0.0906 in.)
	E	2.30 – 2.35 mm (0.0906 – 0.0925 in.)
	F	2.35 – 2.40 mm (0.0925 – 0.0945 in.)
	G	2.40 – 2.45 mm (0.0945 – 0.0965 in.)
	H	2.45 – 2.50 mm (0.0965 – 0.0984 in.)
	J	2.50 – 2.55 mm (0.0984 – 0.1004 in.)
	K	2.55 – 2.60 mm (0.1004 – 0.1024 in.)
	L	2.60 – 2.65 mm (0.1024 – 0.1043 in.)
	M	2.65 – 2.70 mm (0.1043 – 0.1063 in.)
	N	2.70 – 2.75 mm (0.1063 – 0.1083 in.)
	P	2.75 – 2.80 mm (0.1083 – 0.1102 in.)
	Q	2.80 – 2.85 mm (0.1102 – 0.1122 in.)
	R	2.85 – 2.90 mm (0.1122 – 0.1142 in.)
	S	2.90 – 2.95 mm (0.1142 – 0.1161 in.)
	T	2.95 – 3.00 mm (0.1161 – 0.1181 in.)
	U	3.00 – 3.05 mm (0.1181 – 0.1201 in.)
Planetary gear		
Pinion gear thrust clearance	STD	0.11 – 0.84 mm (0.0043 – 0.0331 in.)
	Maximum	0.84 mm (0.0331 in.)
Pinion gear radial clearance	STD	0.009 – 0.038 mm (0.0004 – 0.0015 in.)
	Maximum	0.038 mm (0.0015 in.)
Outer bearing snap ring thickness	Mark	
	1	1.45 – 1.50 mm (0.0571 – 0.0591 in.)
	2	1.50 – 1.55 mm (0.0591 – 0.0610 in.)
	3	1.55 – 1.60 mm (0.0610 – 0.0630 in.)
	4	1.60 – 1.65 mm (0.0630 – 0.0650 in.)
	5	1.65 – 1.70 mm (0.0650 – 0.0669 in.)
Oil seal		
Shift fork shaft oil seal depth		–0.5 – 0.5 mm (–0.020 – 0.020 in.)

SS05J–01

TORQUE SPECIFICATION

Part tightened	N·m	kgf·cm	ft·lbf
Transmission shift control rod x Shift lever	13	133	10
Transmission shift lever assembly	6.0	61	53 in.·lbf
Engine rear mounting x Crossmember	18	185	13
Crossmember x Frame	72	734	53
Engine rear mounting x Transmission	65	660	48
Transfer x Transfer adaptor	24	240	17
Vehicle speed sensor	11.5	115	8
4WD position switch	37	380	27
L4 position switch	37	380	27
Neutral position switch	37	380	27
Plug	37	380	27
Protector	18	185	13
Front bearing retainer	11.5	115	8
Control retainer x Front case	18	185	13
Upper cover x Front case	18	185	13
Companion flange lock nut	118	1,200	87
Extension housing x Rear case	12	120	9
Front case x Rear case	28	285	21
Straight screw plug for shift fork shaft	18.6	190	14
Front drive shift fork (w/ One touch 2–4 selector system)	24	240	17
Actuator assembly x Rear case (w/ One touch 2–4 selector system)	20	200	14
Separator with oil strainer x Front case	7.5	80	69 in.·lbf
Oil pump body x Front case	7.5	80	69 in.·lbf
Straight screw plug for ring gear	18.6	190	14
Relief valve x Oil pump body	29.4	300	21
Oil pump plate x Oil pump body	7.4	75	65 in.·lbf

STARTER

ST00X–02

COMPONENTS

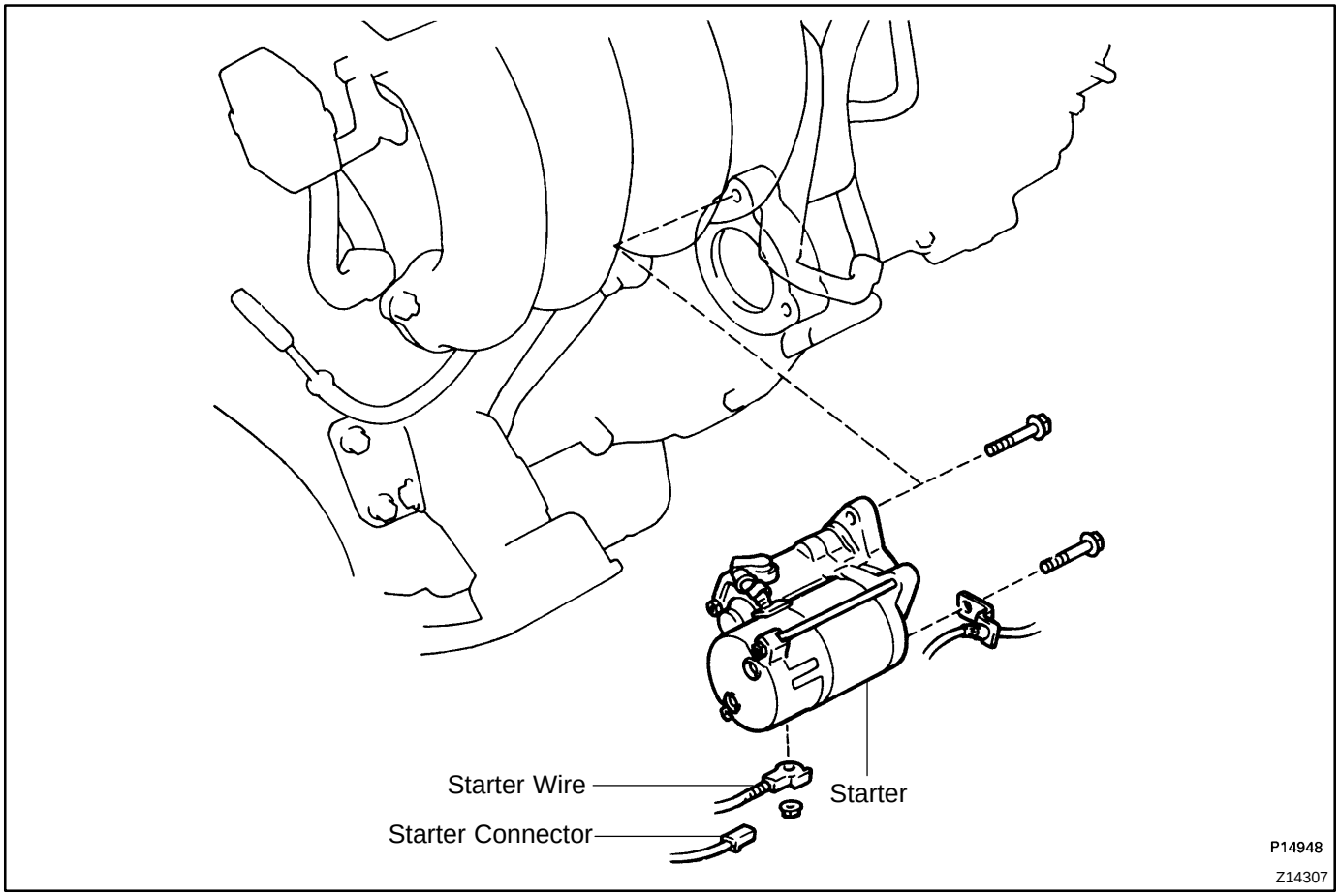

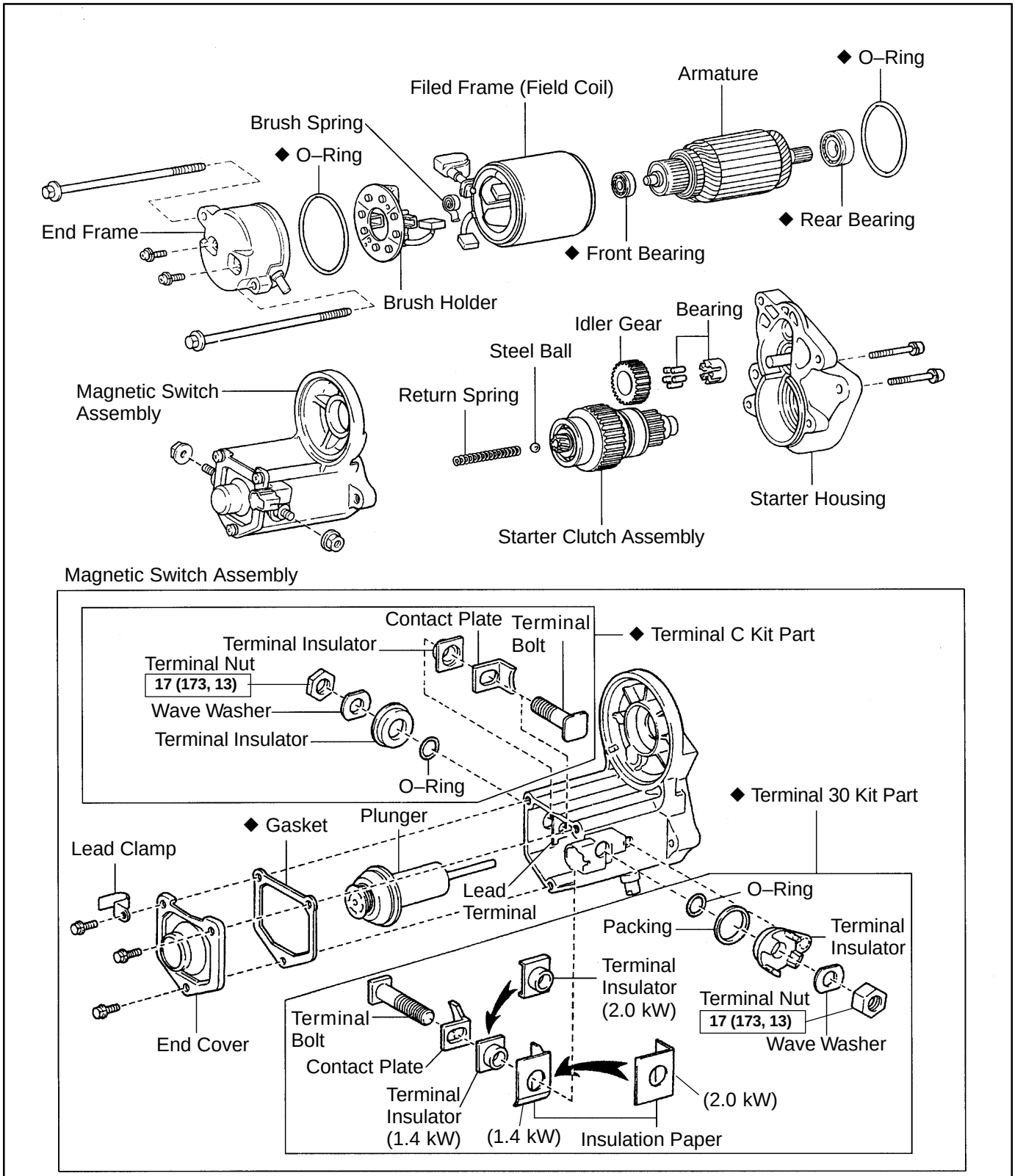

N·m (kgf·cm, ft·lbf) : Specified torque
◆ Non–reusable part

P26016

ST00Z–05

DISASSEMBLY

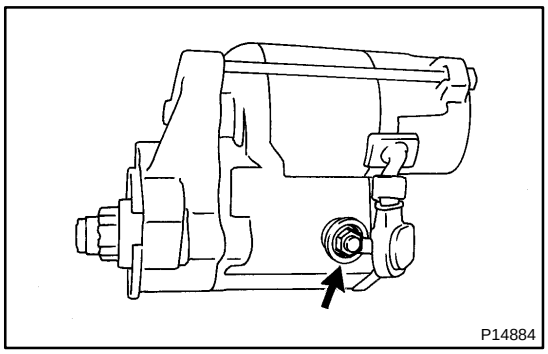

1. REMOVE FIELD FRAME AND ARMATURE

(a) Remove the nut, and disconnect the lead wire from the magnetic switch terminal.
Torque: 5.9 N·m (60 kgf·cm, 52 in.·lbf)

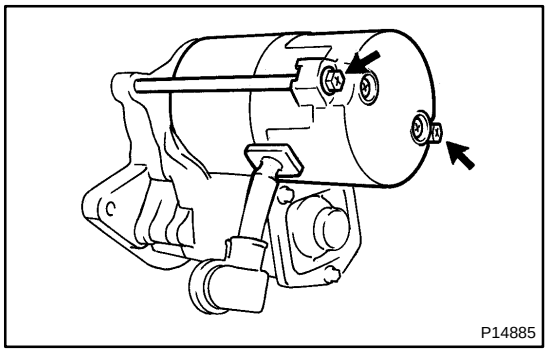

(b) Remove the 2 through bolts.
Torque:
5.9 N·m (60 kgf·cm, 52 in.·lbf) for 1.4 kW
9.3 N·m (93 kgf·cm, 82 in.·lbf) for 2.0 kW

(c) Pull out the field frame with the armature from the magnetic switch assembly.

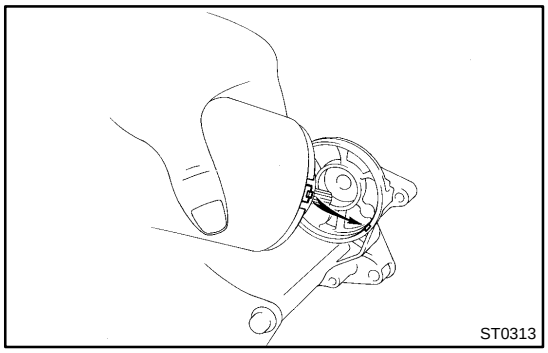

HINT:
At the time of reassembly, please refer to the following items.
Align the protrusion of the field frame with the cutout of the magnetic switch.

(d) Remove the O–ring.

HINT:
At the time of reassembly, please refer to the following items.
Use a new O–ring.

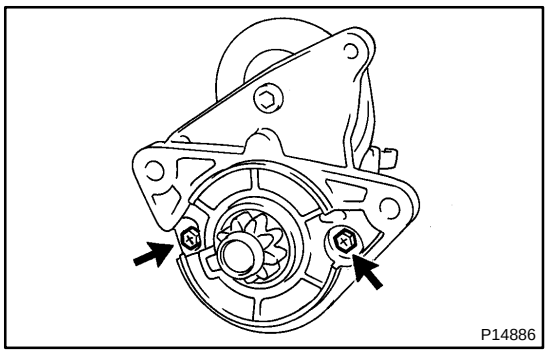

2. REMOVE STARTER HOUSING, CLUTCH ASSEMBLY AND GEAR

(a) Remove the 2 screws.
Torque:
5.9 N·m (60 kgf·cm, 52 in.·lbf) for 1.4 kW
9.3 N·m (93 kgf·cm, 82 in.·lbf) for 2.0 kW

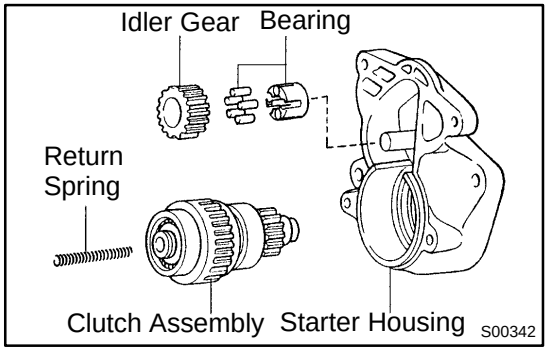

(b) Remove the starter housing, return spring, the clutch assembly, idler gear and bearing from the magnetic switch assembly.

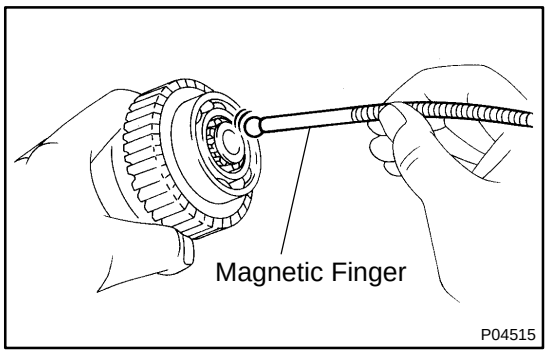

3. REMOVE STEEL BALL

Using a magnetic finger, remove the steel ball from the clutch shaft hole.

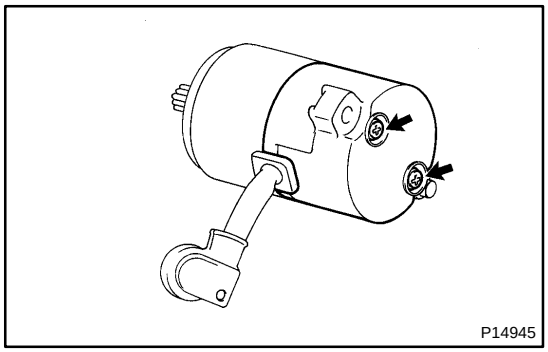

4. REMOVE BRUSH HOLDER

(a) Remove the 2 screws and end cover from the field frame.

Torque:
1.5 N·m (15 kgf·cm, 13 in.·lbf) for 1.4 kW
3.8 N·m (38 kgf·cm, 34 in.·lbf) for 2.0 kW

(b) Remove the O–ring from the field frame.

HINT:

At the time of reassembly, please refer to the following items.

Use a new O–ring.

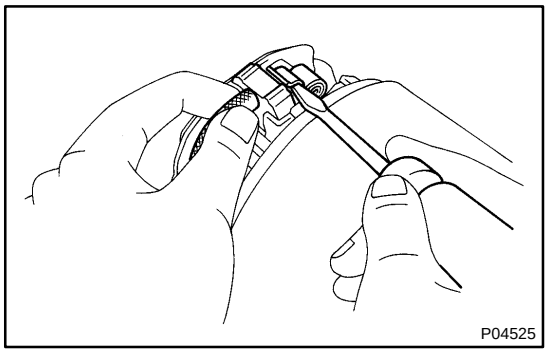

(c) Using a screwdriver, hold the spring back and disconnect the brush from the brush holder. Disconnect the 4 brushes and remove the brush holder.

5. REMOVE ARMATURE FROM FIELD FRAME

ST0I2–03

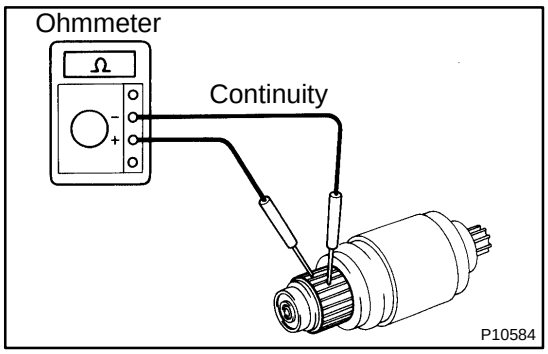

INSPECTION

1. INSPECT ARMATURE COIL

(a) Check the commutator for open circuit.
Using an ohmmeter, check that there is continuity between the segments of the commutator.

If there is no continuity between any segment, replace the armature.

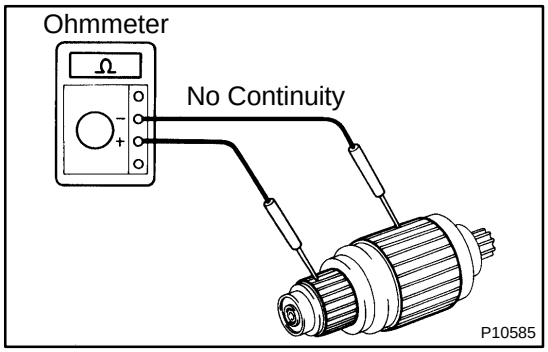

(b) Check the commutator for ground.
Using an ohmmeter, check that there is no continuity between the commutator and armature coil core.

If there is continuity, replace the armature.

2. INSPECT COMMUTATOR

(a) Check the commutator for the dirty and burnt surfaces.

If the surface is dirty or burnt, correct it with sandpaper (No.400) or on a lathe.

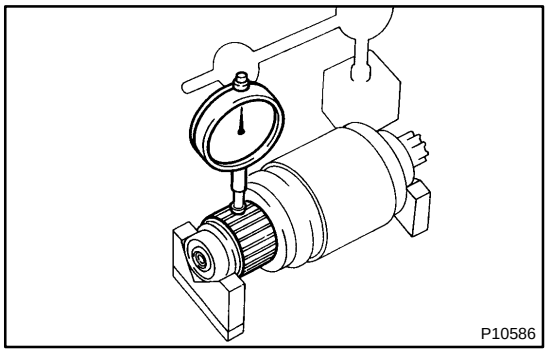

(b) Check for the commutator circle runout.
(1) Place the commutator on V–blocks.
(2) Using a dial gauge, measure the circle runout.
Maximum circle runout: 0.05 mm (0.0020 in.)

If the circle runout is greater than maximum, correct it on a lathe.

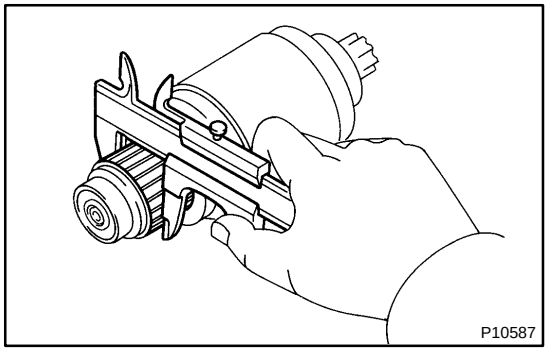

(c) Using vernier calipers, measure the commutator diameter.

Standard diameter:

1.4 kW	30.0 mm (1.180 in.)
2.0 kW	35.0 mm (1.378 in.)

Minimum diameter:

1.4 kW	29.0 mm (1.140 in.)
2.0 kW	34.0 mm (1.339 in.)

If the diameter is less than minimum, replace the armature.

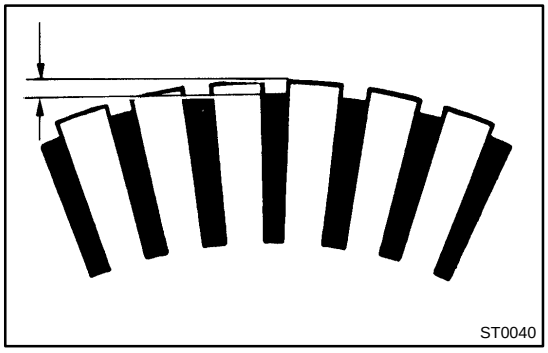

(d) Check that the undercut depth is clean and free of foreign materials. Smooth out the edge.

Standard undercut depth:

1.4 kW	0.6 mm (0.024 in.)
1.8 kW	0.7 mm (0.028 in.)

Minimum undercut depth: 0.2 mm (0.008 in.)

If the undercut depth is less than minimum, correct it with a hacksaw blade.

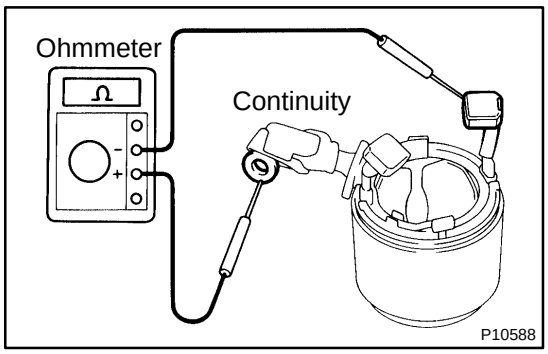

3. INSPECT FIELD COIL

(a) Check the field coil for open circuit.

Using an ohmmeter, check that there is continuity between the lead wire and field coil brush lead.

If there is no continuity, replace the field frame.

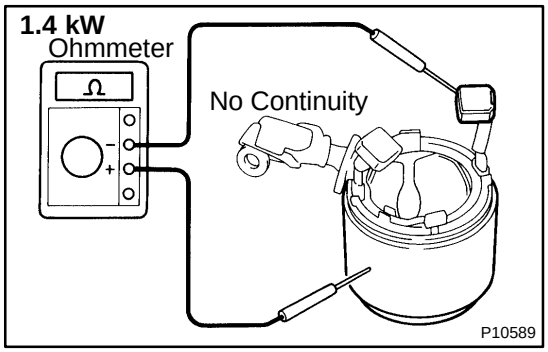

(b) 1.4 kW:

Check the field coil for ground.

Using an ohmmeter, check that there is no continuity between the field coil end and field frame.

If there is continuity, repair or replace the field frame.

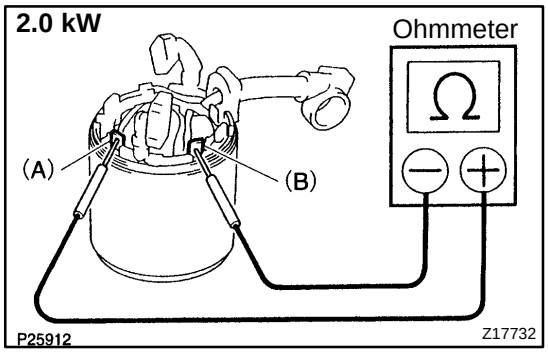

4. 2.0 kW:

INSPECT SHUNT COIL FOR OPEN CIRCUIT

Using an ohmmeter, check that there is continuity between terminal (A) and (B).

Standard resistance: 1.5 – 1.9 Ω at 20˚C (68˚F)

If the resistance is not as specified, repair or replace the field frame.

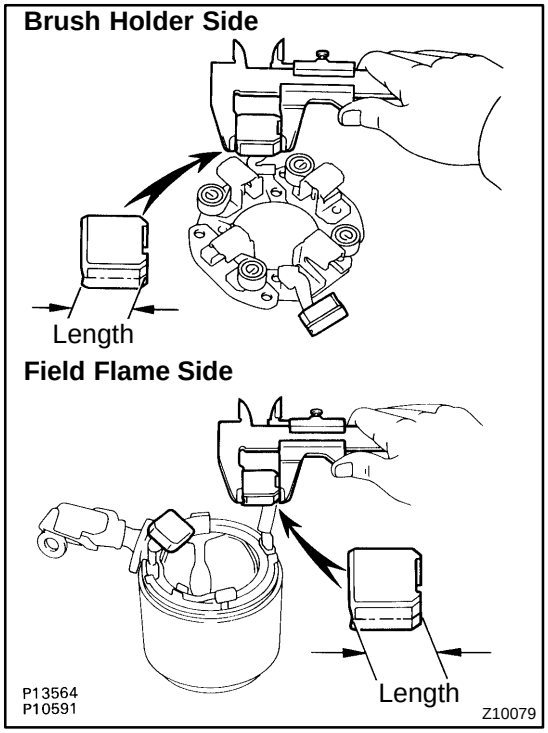

5. INSPECT BRUSHES

Using vernier calipers, measure the brush length.

Standard length:

1.4 kW	15.5 mm (0.610 in.)
2.0 kW	15.0 mm (0.591 in.)

Minimum length:

1.4 kW	10.0 mm (0.394 in.)
2.0 kW	9.0 mm (0.354 in.)

If the length is less than minimum, replace the brush holder and field frame.

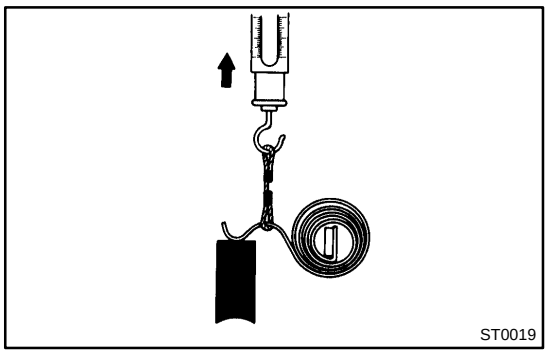

6. INSPECT BRUSH SPRINGS

Check the brush spring load.

Take the pull scale reading the instant the brush spring separates from the brush.

Standard spring installed load:

1.4 kW	17.6 – 23.5 N (1.8 – 2.4 kgf, 3.9 – 5.3 lbf)
2.0 kW	21.5 – 27.5 N (2.2 – 2.8 kgf, 4.9 – 6.2 lbf)

Minimum spring installed load:

1.4 kW	11.8 N (1.2 kgf, 2.6 lbf)
2.0 kW	12.7 N (1.3 kgf, 2.7 lbf)

If the installed load is less than minimum, replace the brush springs.

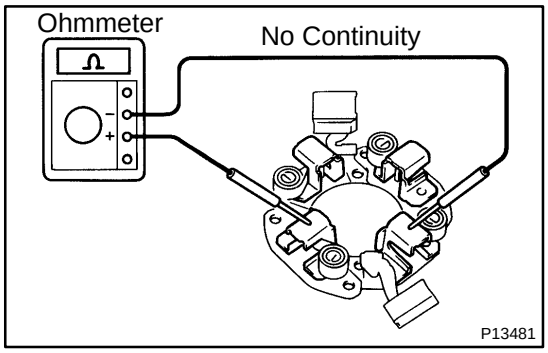

7. INSPECT BRUSH HOLDER

Check the brush holder insulation.

Using an ohmmeter, check that there is no continuity between the positive (+) and negative (–) brush holders.

If there is continuity, repair or replace the brush holder.

8. INSPECT CLUTCH AND GEAR

(a) Check the gear teeth on the pinion gear, idler gear and clutch assembly for wear or damage.

If damaged, replace the gear or clutch assembly.

If damaged, also check the ring gear of the flywheel/drive plate for wear or damage.

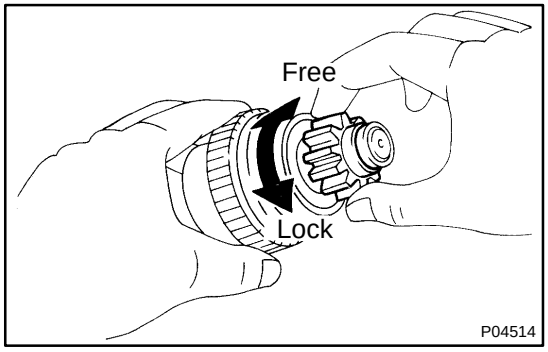

(b) Check the clutch pinion gear.

Hold the starter clutch and rotate the pinion gear counterclockwise, and check that it turns freely. Try to rotate the pinion gear clockwise and check that it locks.

If necessary, replace the clutch assembly.

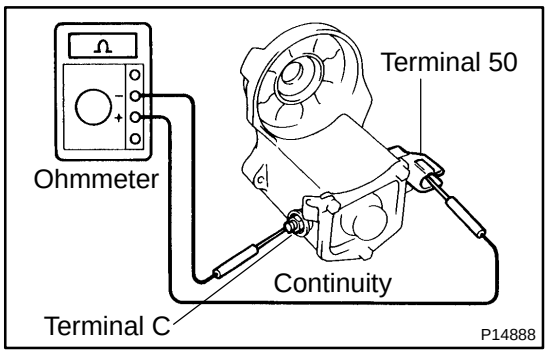

9. INSPECT MAGNETIC SWITCH

(a) Check the pull–in coil for open circuit.
Using an ohmmeter, check that there is continuity between terminals 50 and C.

If there is no continuity, check and replace the magnetic switch.

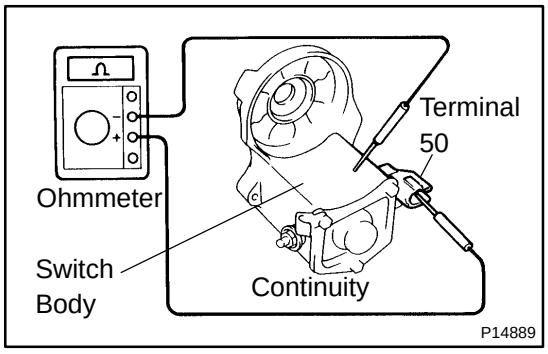

(b) Check the hold–in coil for open circuit.
Using an ohmmeter, check that there is continuity between terminal 50 and the switch body.

If there is no continuity, replace the magnetic switch.

10. INSPECT BEARING

Turn the bearing by hand while applying inward force.

If resistance is felt or the bearing sticks, replace the bearing (See page ST–11).

ST0I5–02

INSTALLATION

Installation is in the reverse order of removal (See page ST–4).

ST0I4–02

REASSEMBLY

Reassembly is in the reverse order of disassembly (See page ST–5).

HINT:

Use high–temperature grease to lubricate the bearings, gears, return spring and steel ball when assembling the starter.

ST00Y–03

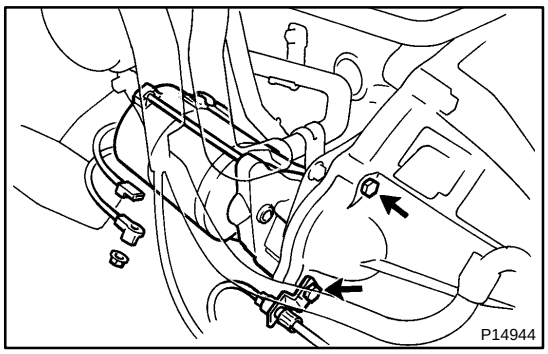

REMOVAL

REMOVE STARTER

(a) Disconnect the starter connector.

(b) Remove the nut, and disconnect the starter wire.
Torque: 8.8 N·m (90 kgf·cm, 78 in.·lbf)

(c) Remove the 2 bolts and starter.
Torque: 39 N·m (400 kgf·cm, 29 ft·lbf)

ST0I3–02

REPLACEMENT

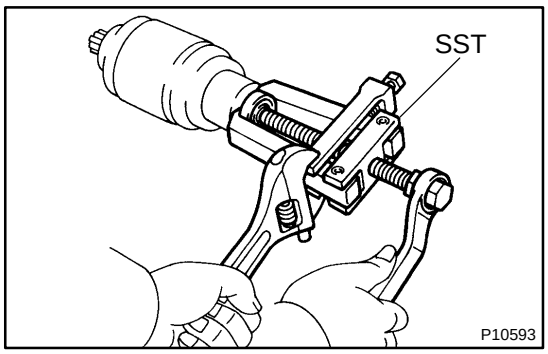

1. REPLACE FRONT BEARING

(a) Using SST, remove the bearing.
SST 09286–46011

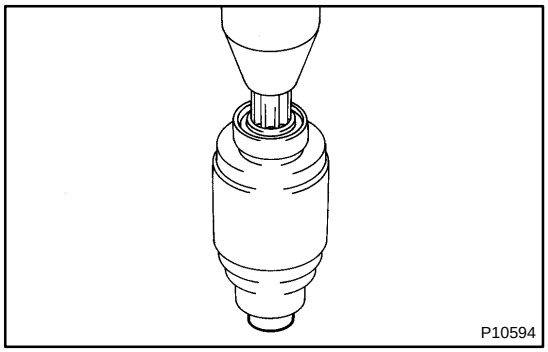

(b) Using a press, press in a new bearing.

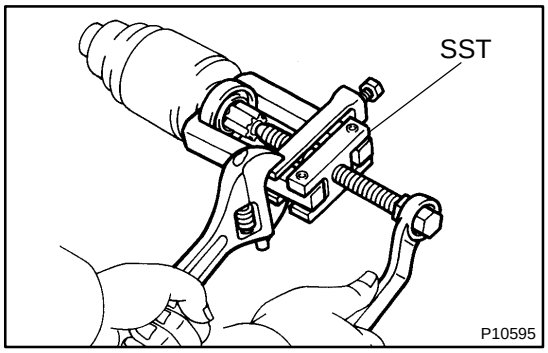

2. REPLACE REAR BEARING

(a) Using SST, remove the bearing.
SST 09286–46011

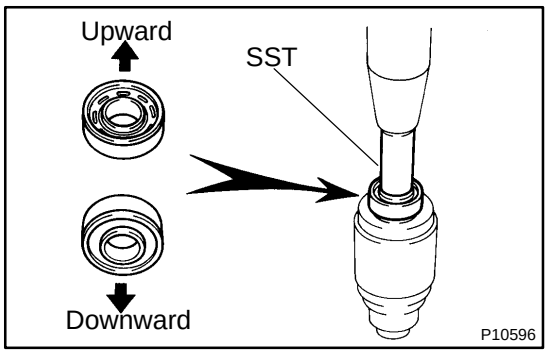

(b) Using SST and a press, press in a new bearing.

NOTICE:

Be careful of the bearing installation direction.

SST 09820–00031

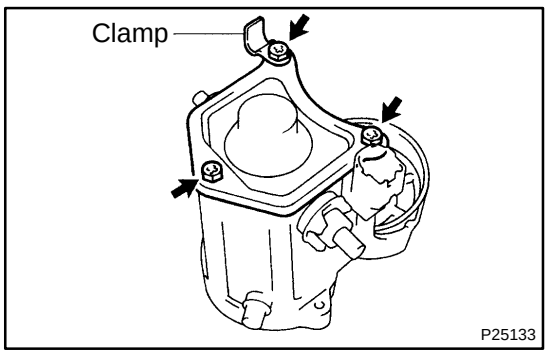

3. REPLACE MAGNETIC SWITCH TERMINAL KIT PARTS

(a) Remove the 3 bolts, lead clamp, end cover, gasket and plunger.

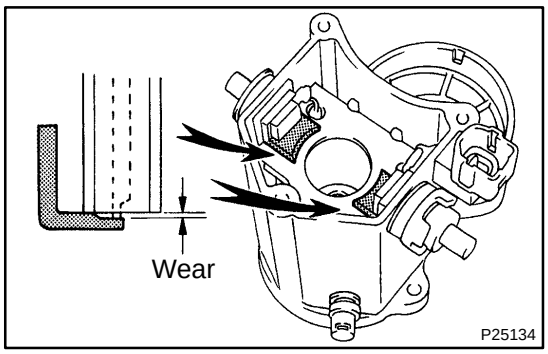

(b) Using vernier calipers, measure the contact plate for depth of wear.

Maximum wear: 0.9 mm (0.035 in.)

If the depth of wear is greater than the maximum, replace the contact plate.

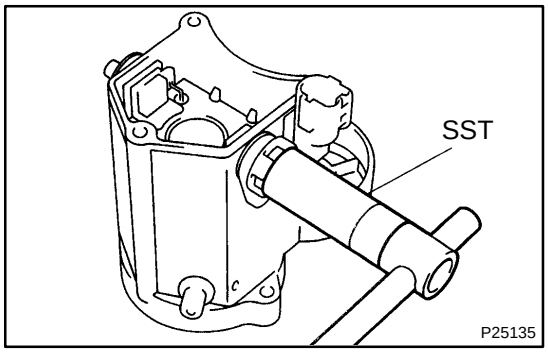

(c) Remove the terminal kit parts.

(1) Using SST, loosen the terminal nuts.

SST 09810–38140

(2) Terminal C:

Remove the terminal nut, wave washer, terminal insulator (outside), O–ring, terminal bolt, contact plate and terminal insulator (inside).

(3) Terminal 30:

Remove the terminal nut, wave washer, terminal insulator (outside), packing, O–ring, terminal bolt, contact plate, terminal insulator (inside) and insulation paper.

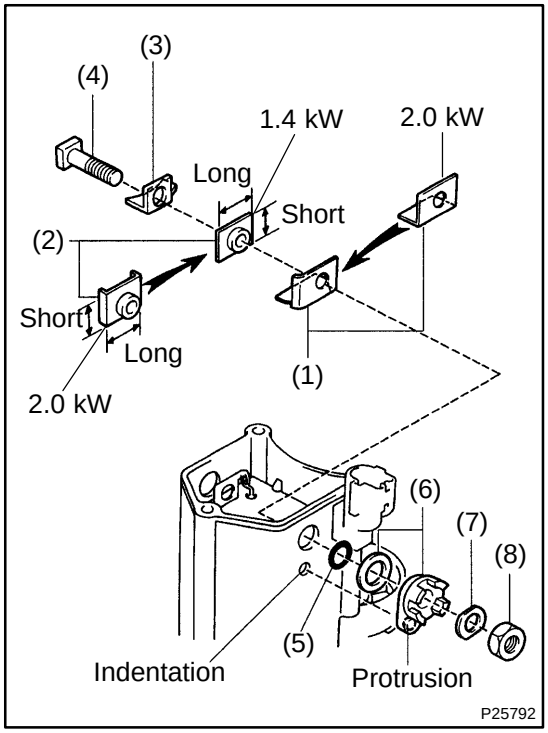

(d) Temporarily install these new terminal 30 kit parts:

(1) Insulation paper

(2) Terminal insulator (inside)

NOTICE:

Be careful to install the terminal insulator (inside) in the correct direction.

(3) Contact plate

(4) Terminal bolt

(5) O–ring

(6) Packing and terminal insulator (outside)

Install the packing to the terminal insulator, and install them.

HINT:

Match the protrusion of the insulator with the indentation of the housing.

(7) Wave washer

(8) Terminal nut

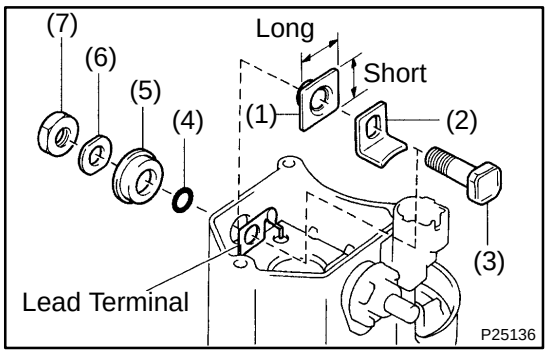

(e) Temporarily install these new terminal C kit parts:
(1) Terminal insulator (inside)

NOTICE:

Be careful to install the terminal insulator (inside) in the correct direction.

(2) Contact plate
(3) Terminal bolt
(4) O–ring
(5) Terminal insulator (outside)
(6) Wave washer
(7) Terminal nut

(f) Temporarily tighten the terminal nuts.

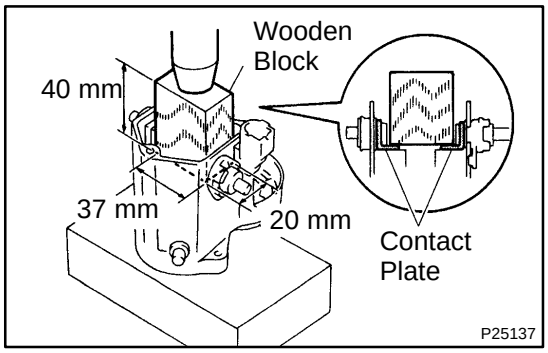

(g) Tighten the terminal nuts.
(1) Put a wooden block on the contact plate and press it down with a hand press.

Dimensions of wooden block:
20 x 37 x 40 mm (0.79 x 1.46 x 1.57 in.)
Press force: 981 N (100 kgf, 221 lbf)

NOTICE:

- **Check the diameter of the hand press ram. Then calculate the gauge pressure of the press when 981 N (100 kgf, 221 lbf) of force is applied.**
  Gauge pressure:

$$(\text{kgf/cm}^2) = \frac{100\ \text{kgf}}{\left(\frac{\text{Ram diameter (cm)}}{2}\right)^2 \times 3.14\ (\pi)}$$

$$(\text{psi}) = \frac{221\ \text{lbf}}{\left(\frac{\text{Ram diameter (in.)}}{2}\right)^2 \times 3.14\ (\pi)}$$

$$(\text{kPa}) = (\text{kgf/cm}^2) \times 98.1$$

$$(\text{kPa}) = (\text{psi}) \times 6.9$$

- **If the contact plate is not pressed down with the specified pressure, the contact plate may tilt due to coil deformation or the tightening of the nut.**

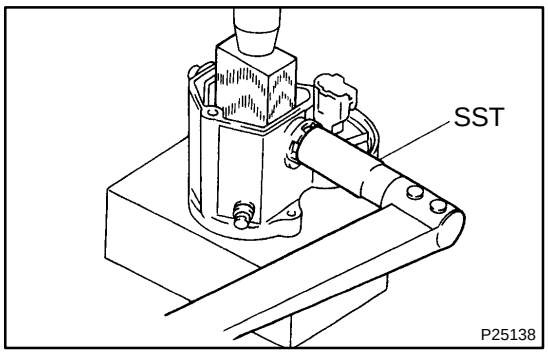

(2) Using SST, tighten the nuts to the specified torque.
SST 09810–38140
Torque: 17 N·m (173 kgf·cm, 13 ft·lbf)

NOTICE:
If the nut is over tightened, it may cause cracks on the inside of the insulator.

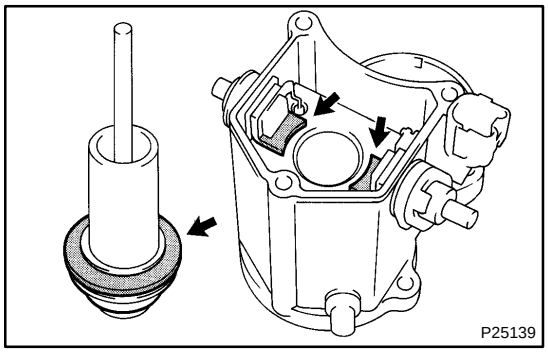

(h) Clean the contact surfaces of the remaining contact plate and plunger with a dry shop rag.

(i) Reinstall the plunger, a new gasket, the end cover and lead clamp with the 3 bolts.
Torque:
2.5 N·m (25 kgf·cm, 22 in.·lbf) for 1.4 kW
3.6 N·m (37 kgf·cm, 32 in.·lbf) for 2.0 kW

ST013–05

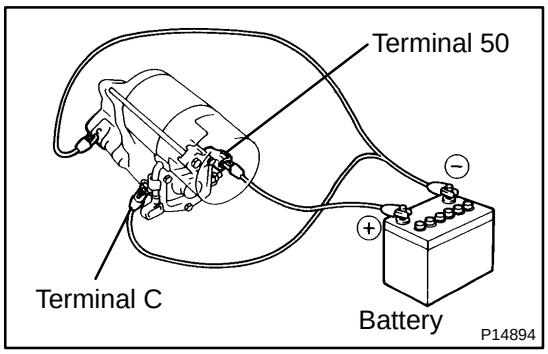

TEST

NOTICE:

These tests must be done within 3 to 5 seconds to avoid burning out the coil.

1. DO PULL–IN TEST

(a) Disconnect the field coil lead wire from terminal C.

(b) Connect the battery to the magnetic switch as shown. Check that the clutch pinion gear moves outward.

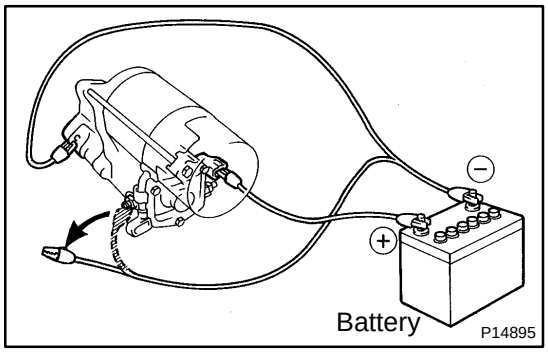

2. DO HOLD–IN TEST

With battery connected as above with the clutch pinion gear out, disconnect the negative (–) lead from terminal C. Check that the pinion gear remains out.

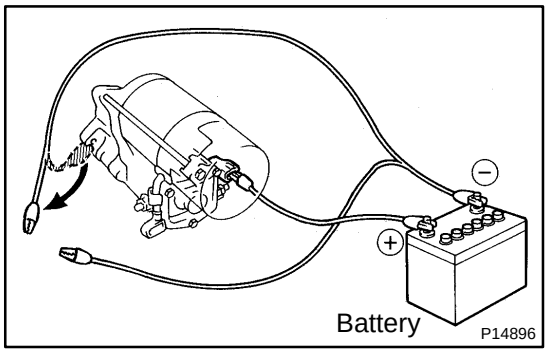

3. INSPECT CLUTCH PINION GEAR RETURN

Disconnect the negative (–) lead from the switch body. Check that the clutch pinion gear returns inward.

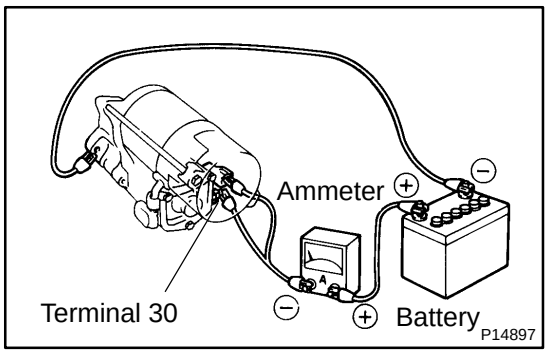

4. DO NO–LOAD PERFORMANCE TEST

(a) Connect the battery and ammeter to the starter as shown.

(b) Check that the starter rotates smoothly and steadily with the pinion gear moving out. Check that the ammeter shows the specified current.

Specified current:

1.4 kW	90 A or less at 11.5 V
2.0 kW	100 A or less at 11.5 V

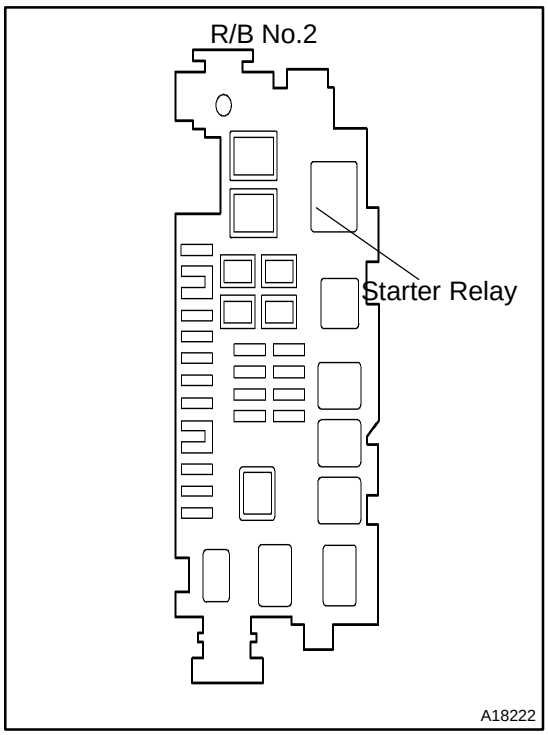

STARTER RELAY

ST0I6–02

INSPECTION

1. REMOVE STARTER RELAY (Marking: ST)

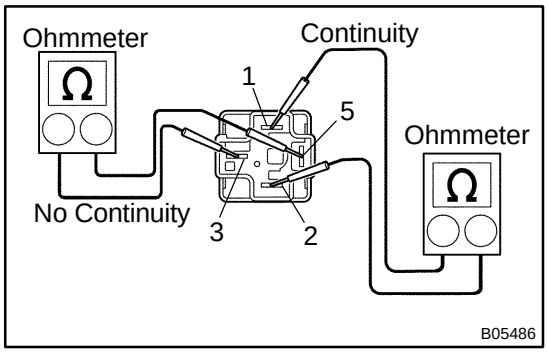

2. INSPECT STARTER RELAY

(a) Inspect the relay continuity.

(1) Using an ohmmeter, check that there is continuity between terminals 1 and 2.

If there is no continuity, replace the relay.

(2) Check that there is no continuity between terminals 3 and 5.

If there is continuity, replace the relay.

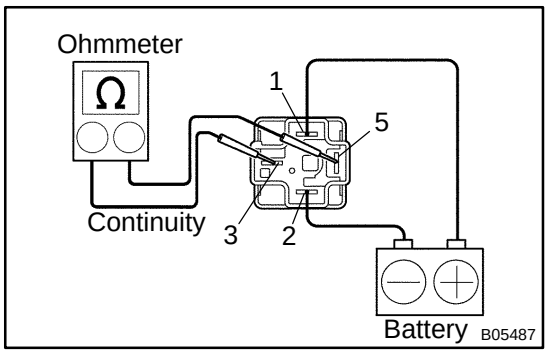

(b) Inspect the relay operation.

(1) Apply battery positive voltage across terminals 1 and 2.

(2) Using an ohmmeter, check that there is continuity between terminals 3 and 5.

If there is no continuity, replace the relay.

3. REINSTALL STARTER RELAY

STARTING SYSTEM

ST00W–01

ON–VEHICLE INSPECTION

NOTICE:

Before changing the starter, check the following items again:

- **Connector connection**
- **Accessory installation, e.g.: theft deterrent system**

STARTER

COMPONENTS

ST01J–03

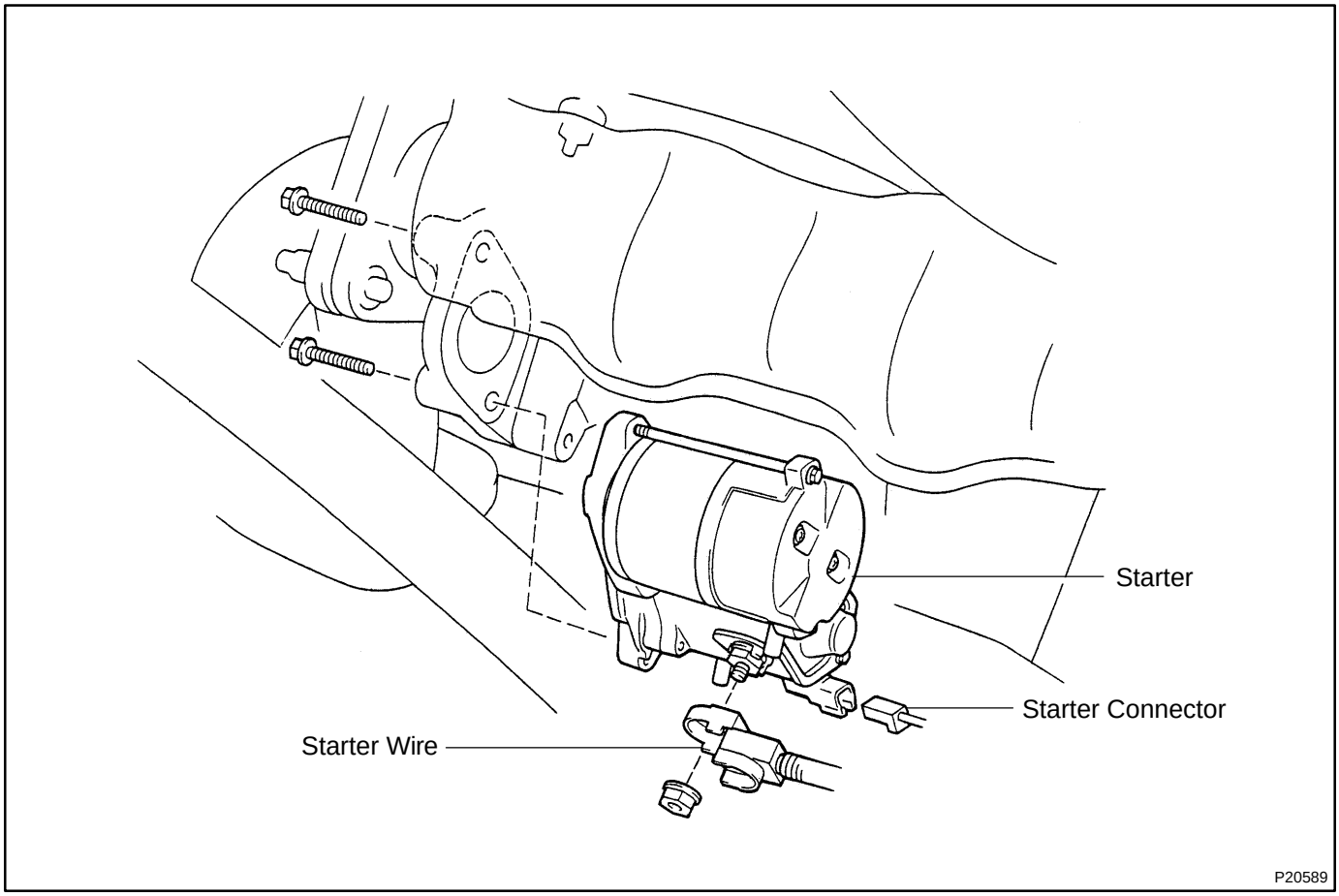

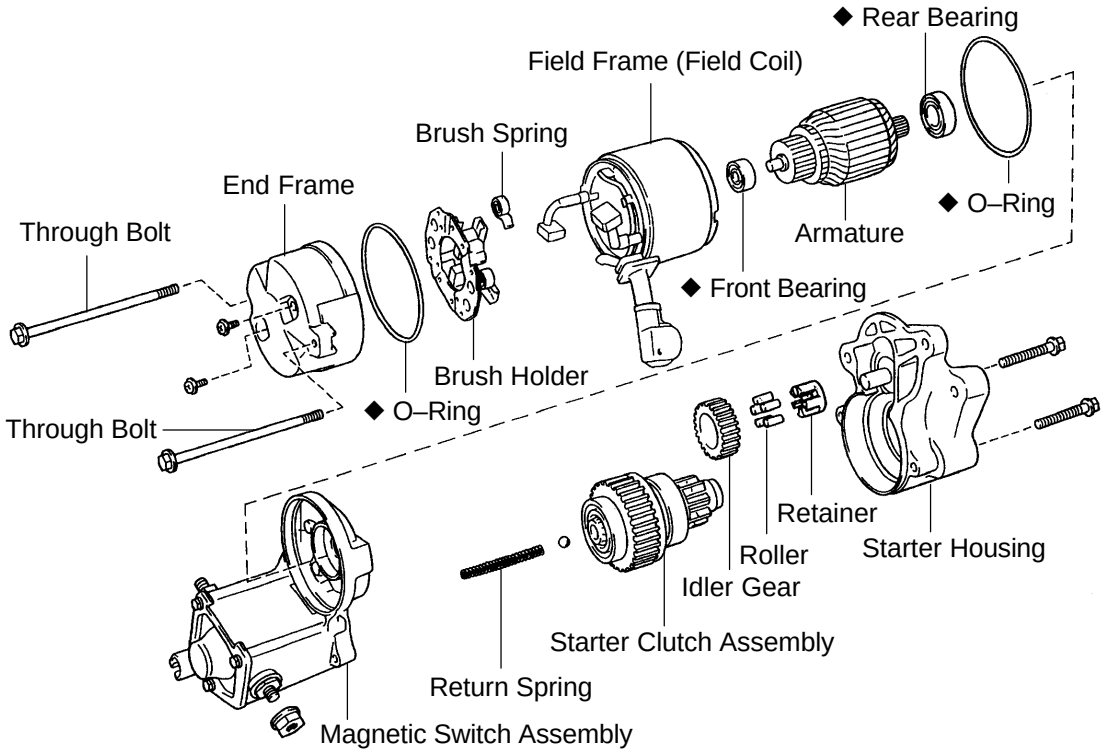

Magnetic Switch Assembly

S05731

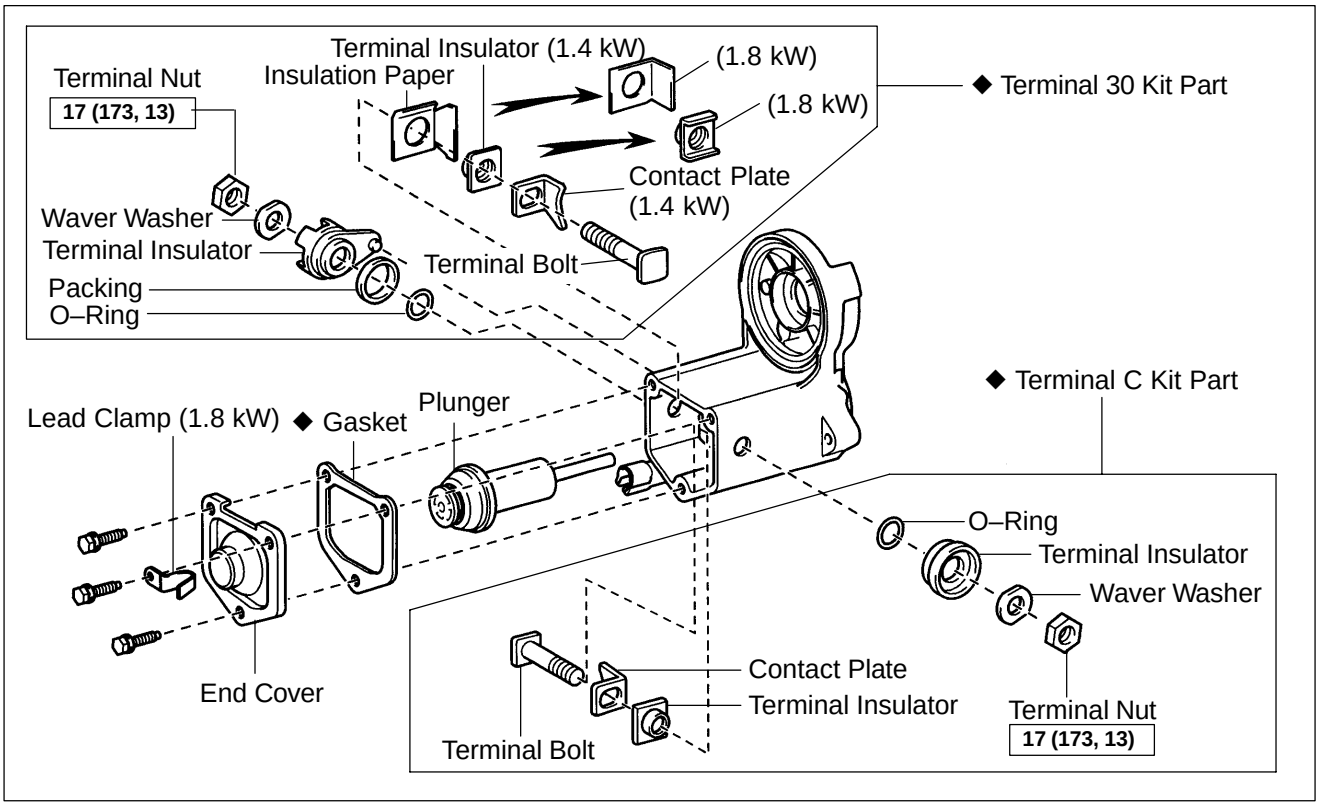

N·m (kgf·cm, ft·lbf) : Specified torque

◆ Non–reusable part

S02425

Z19063

ST01L–02

DISASSEMBLY

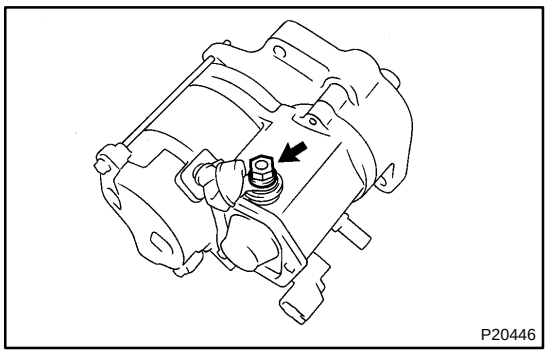

1. REMOVE FIELD FRAME AND ARMATURE

(a) Remove the nut, and disconnect the lead wire from the magnetic switch terminal.
Torque: 5.9 N·m (60 kgf·cm, 52 in.·lbf)

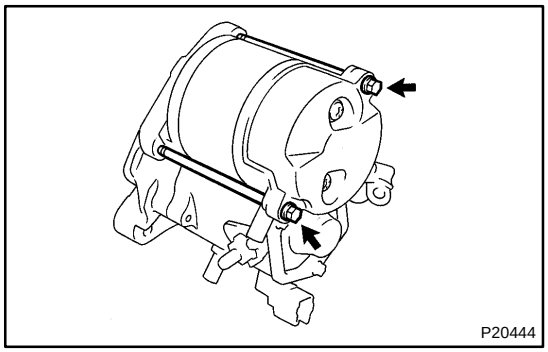

(b) Remove the 2 through bolts.
Torque:
5.9 N·m (60 kgf·cm, 52 in.·lbf) for 1.4 kW
9.3 N·m (95 kgf·cm, 82 in.·lbf) for 1.8 kW

(c) Pull out the field frame with the armature from the magnetic switch assembly.

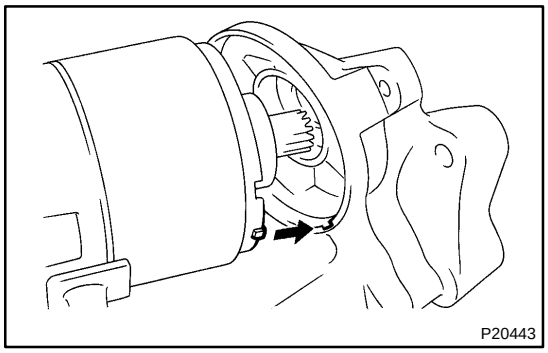

HINT:
At the time of reassembly, please refer to the following items.
Align the protrution of the field frame with the cutout of the magnetic switch.

(d) Remove the O–ring.

HINT:
At the time of reassembly, please refer to the following items.
Use a new O–ring.

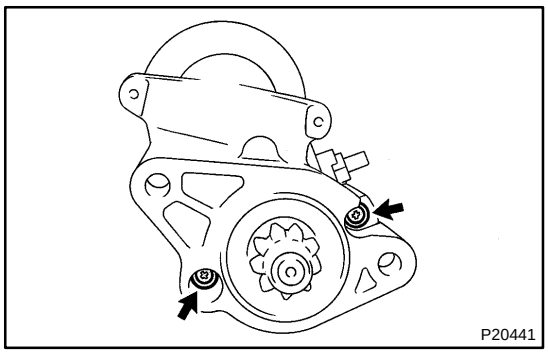

2. REMOVE STARTER HOUSING, CLUTCH ASSEMBLY AND GEAR

(a) Remove the 2 screws.
Torque:
5.9 N·m (60 kgf·cm, 52 in.·lbf) for 1.4 kW
9.3 N·m (95 kgf·cm, 82 in.·lbf) for 1.8 kW

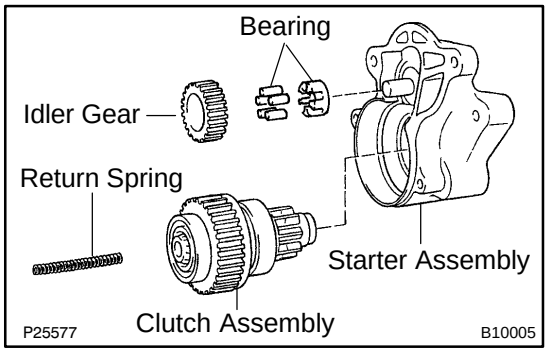

(b) Remove the starter housing, return spring, the clutch assembly, idler gear and bearing from the magnetic switch assembly.

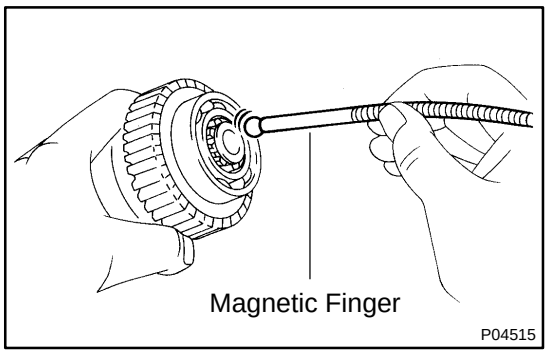

3. REMOVE STEEL BALL

Using a magnetic finger, remove the steel ball from the clutch shaft hole.

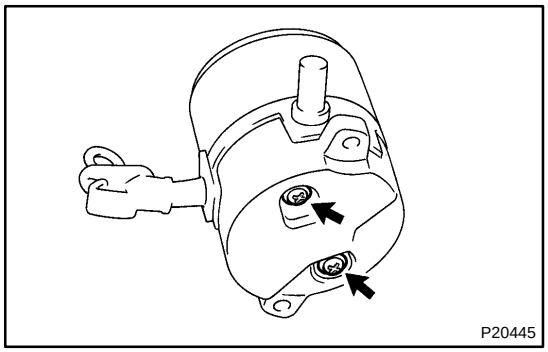

4. REMOVE BRUSH HOLDER

(a) Remove the 2 screws end frame from the field frame.

Torque:
1.5 N·m (15 kgf·cm, 13 in.·lbf) for 1.4 kW
3.8 N·m (39 kgf·cm, 34 in.·lbf) for 3.8 kW

(b) Remove the O–ring from the field frame.

HINT:

At the time of reassembly, please refer to the following items.

Use a new O–ring.

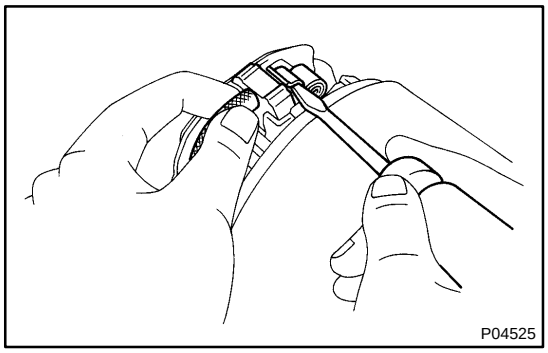

(c) Using a screwdriver hold the spring back and disconnect the brush from the brush holder. Disconnect the 4 brushes, and remove the brush holder.

5. REMOVE ARMATURE FROM FIELD FRAME

ST0HX–01

INSPECTION

1. INSPECT ARMATURE COIL

(a) Check the commutator for open circuit.
Using an ohmmeter, check that there is continuity between the segments of the commutator.

If there is no continuity between any segment, replace the armature.

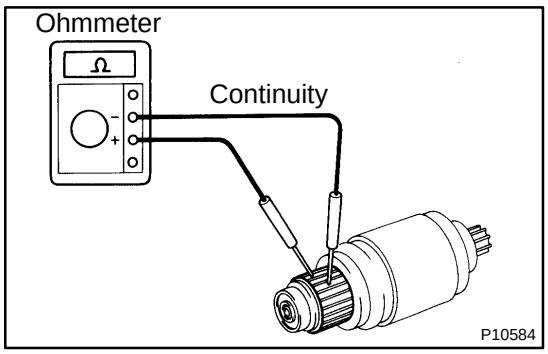

(b) Check the commutator for ground.
Using an ohmmeter, check that there is no continuity between the commutator and armature coil core.

If there is continuity, replace the armature.

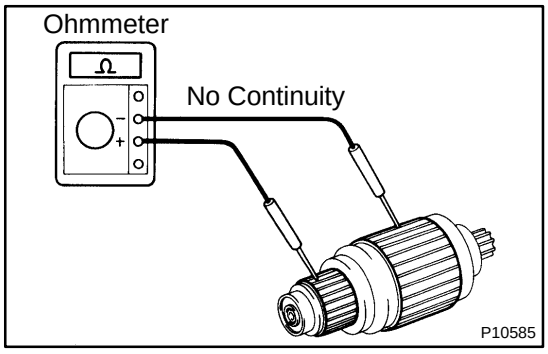

2. INSPECT COMMUTATOR

(a) Check the commutator for the dirty and burnt surfaces.

If the surface is dirty or burnt, correct it with sandpaper (No.400) or on a lathe.

(b) Check for the commutator circle runout.
(1) Place the commutator on V–blocks.
(2) Using a dial gauge, measure the circle runout.
Maximum circle runout: 0.05 mm (0.0020 in.)

If the circle runout is greater than maximum, correct it on a lathe.

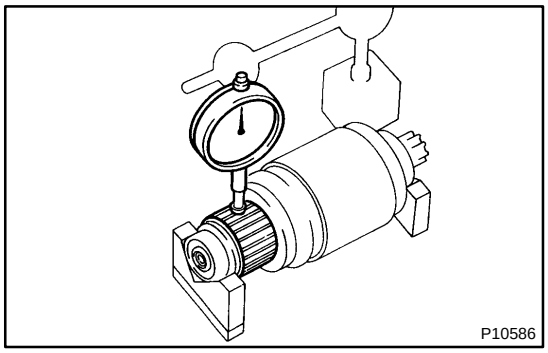

(c) Using vernier calipers, measure the commutator diameter.

Standard diameter:

1.4 kW	30.0 mm (1.180 in.)
1.8 kW	35.0 mm (1.378 in.)

Minimum diameter:

1.4 kW	29.0 mm (1.140 in.)
1.8 kW	34.0 mm (1.339 in.)

If the diameter is less than minimum, replace the armature.

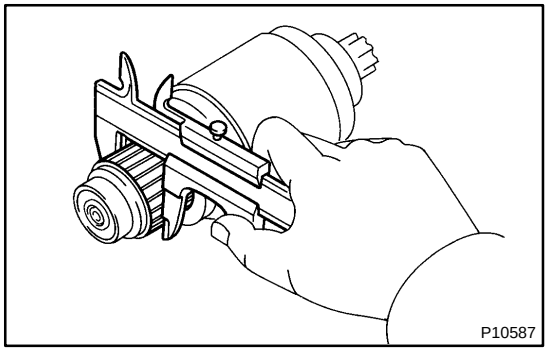

(d) Check that the undercut depth is clean and free of foreign materials. Smooth out the edge.

Standard undercut depth:

1.4 kW	0.6 mm (0.024 in.)
1.8 kW	0.7 mm (0.028 in.)

Minimum undercut depth: 0.2 mm (0.008 in.)

If the undercut depth is less than minimum, correct it with a hacksaw blade.

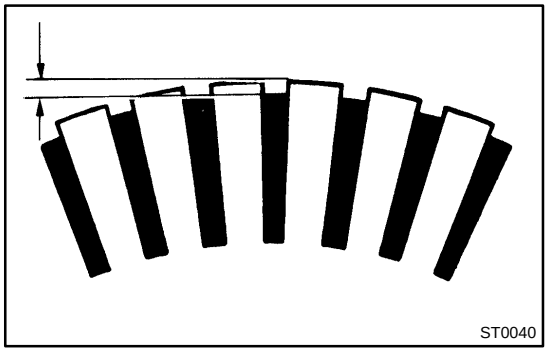

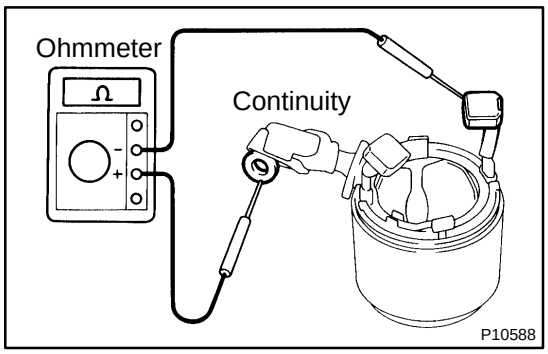

3. INSPECT FIELD COIL

(a) Check the field coil for open circuit.

Using an ohmmeter, check that there is continuity between the lead wire and field coil brush lead.

If there is no continuity, replace the field frame.

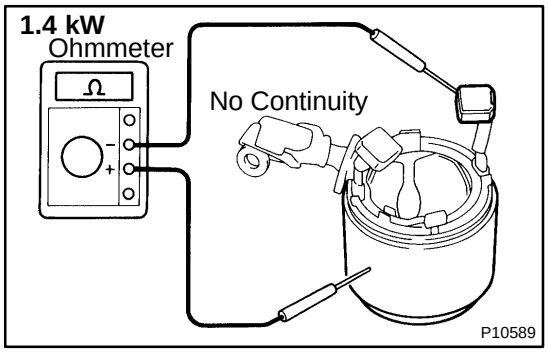

(b) 1.4 kW:

Check the field coil for ground.

Using an ohmmeter, check that there is no continuity between the field coil end and field frame.

If there is continuity, repair or replace the field frame.

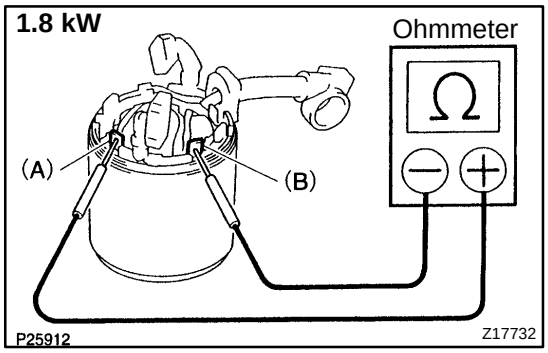

4. 1.8 kW:

INSPECT SHUNT COIL FOR OPEN CIRCUIT

Using an ohmmeter, check that there is continuity between terminal (A) and (B).

Standard resistance: 1.4 – 1.9 Ω at 20˚C (68˚F)

If the resistance is not as specified, repair or replace the field frame.

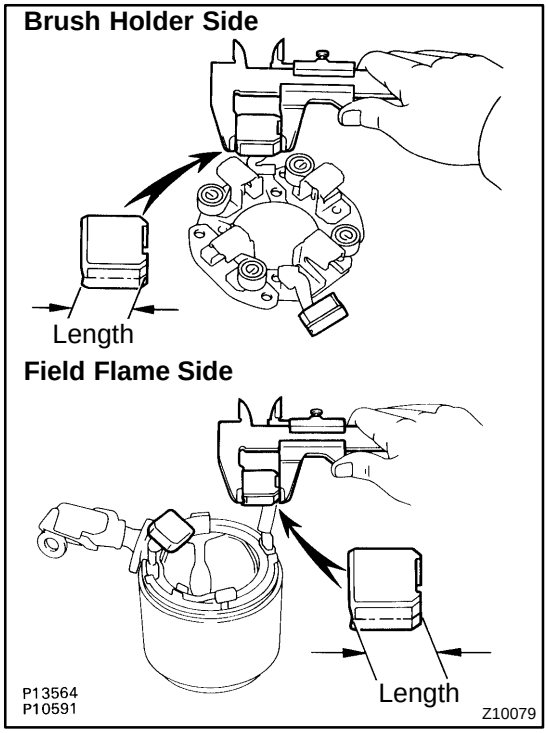

5. INSPECT BRUSHES

Using vernier calipers, measure the brush length.

Standard length:

1.4 kW	15.5 mm (0.610 in.)
1.8 kW	15.0 mm (0.591 in.)

Minimum length:

1.4 kW	10.0 mm (0.394 in.)
1.8 kW	9.0 mm (0.354 in.)

If the length is less than minimum, replace the brush holder and field frame.

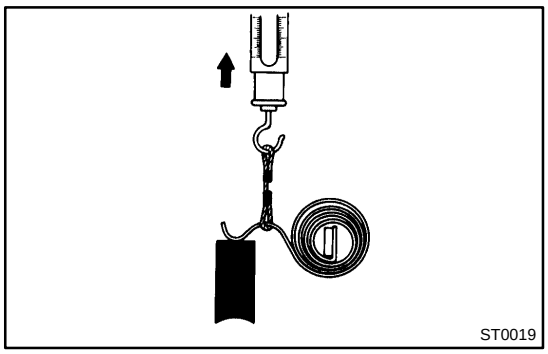

6. INSPECT BRUSH SPRINGS

Check the brush spring load.

Take the pull scale reading the instant the brush spring separates from the brush.

Standard spring installed load:

1.4 kW	17.6 – 23.5 N (1.8 – 2.4 kgf, 3.9 – 5.3 lbf)
1.8 kW	21.5 – 27.5 N (2.2 – 2.8 kgf, 4.9 – 6.2 lbf)

Minimum spring installed load:

1.4 kW	11.8 N (1.2 kgf, 2.6 lbf)
1.8 kW	12.7 N (1.3 kgf, 2.7 lbf)

If the installed load is less than minimum, replace the brush springs.

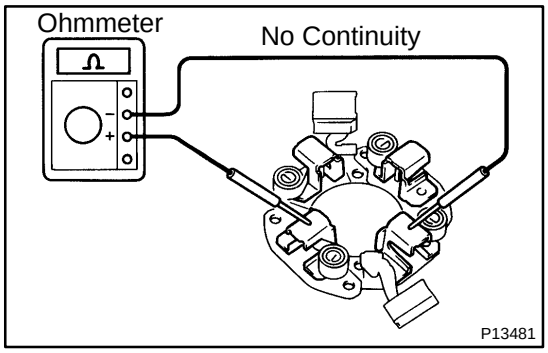

7. INSPECT BRUSH HOLDER

Check the brush holder insulation.

Using an ohmmeter, check that there is no continuity between the positive (+) and negative (–) brush holders.

If there is continuity, repair or replace the brush holder.

8. INSPECT CLUTCH AND GEAR

(a) Check the gear teeth on the pinion gear, idler gear and clutch assembly for wear or damage.

If damaged, replace the gear or clutch assembly.

If damaged, also check the ring gear of the flywheel/drive plate for wear or damage.

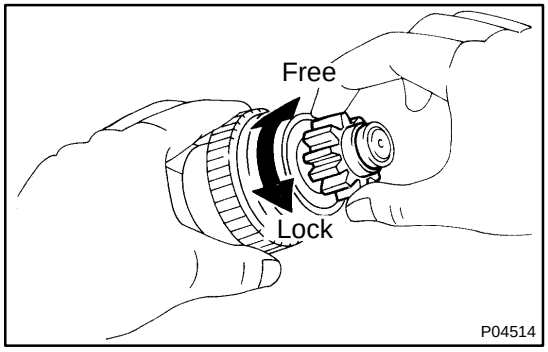

(b) Check the clutch pinion gear.

Hold the starter clutch and rotate the pinion gear counterclockwise, and check that it turns freely. Try to rotate the pinion gear clockwise and check that it locks.

If necessary, replace the clutch assembly.

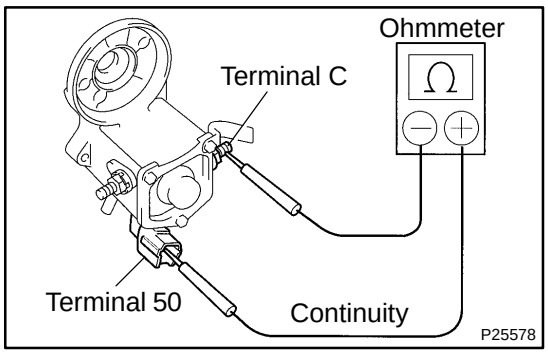

9. INSPECT MAGNETIC SWITCH

(a) Check the pull–in coil for open circuit.
Using an ohmmeter, check that there is continuity between terminals 50 and C.

If there is no continuity, check and replace the magnetic switch.

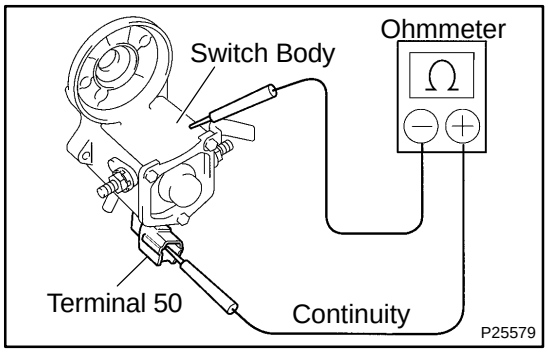

(b) Check the hold–in coil for open circuit.
Using an ohmmeter, check that there is continuity between terminal 50 and the switch body.

If there is no continuity, replace the magnetic switch.

10. INSPECT BEARING

Turn the bearing by hand while applying inward force.

If resistance is felt or the bearing sticks, replace the bearing.

(See page ST–11)

ST0I0–02

INSTALLATION

Installation is in the reverse order of removal (See page ST–4).

ST0HZ–01

REASSEMBLY

Reassembly is in the reverse order of disassembly (See page ST–5).

HINT:

Use high–temperature grease to lubricate the bearings, gears, return spring and steel ball when assembling the starter.

ST01K–02

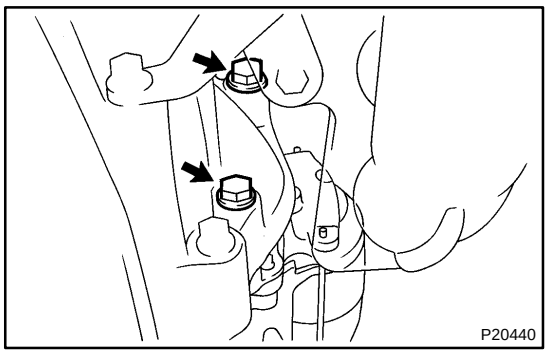

REMOVAL

REMOVE STARTER

(a) Disconnect the starter connector.

(b) Remove the nut, and disconnect the starter wire.
Torque: 8.8 N·m (90 kgf·cm, 70 in.·lbf)

(c) Remove the 2 bolts and starter.
Torque: 39 N·m (400 kgf·cm, 29 ft·lbf)

ST0HY–02

REPLACEMENT

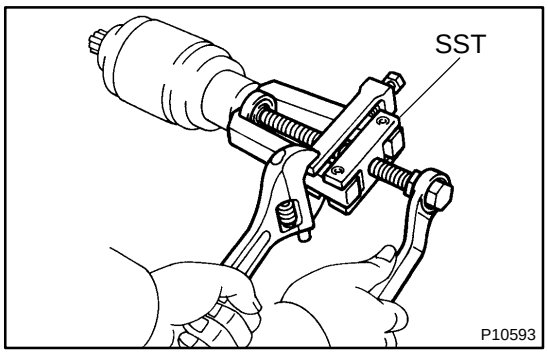

1. REPLACE FRONT BEARING

(a) Using SST, remove the bearing.
SST 09286–46011

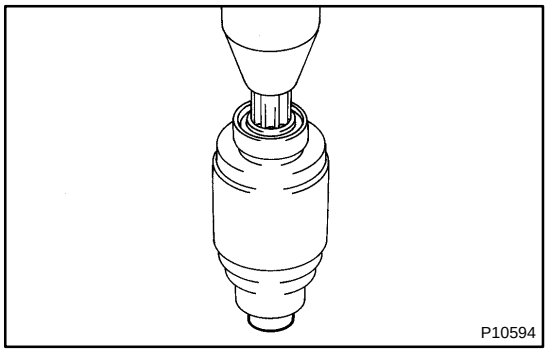

(b) Using a press, press in a new bearing.

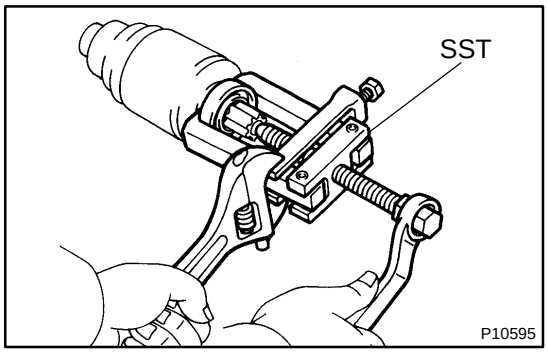

2. REPLACE REAR BEARING

(a) Using SST, remove the bearing.
SST 09286–46011

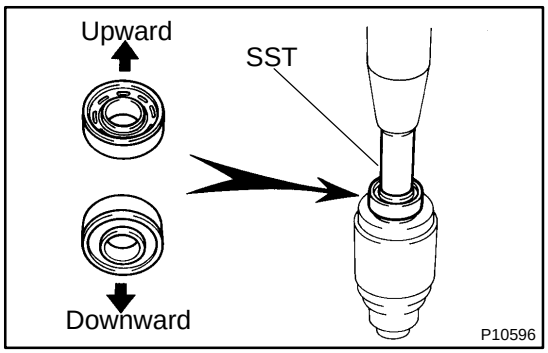

(b) Using SST and a press, press in a new bearing.

NOTICE:

Be careful of the bearing installation direction.

SST 09820–00031

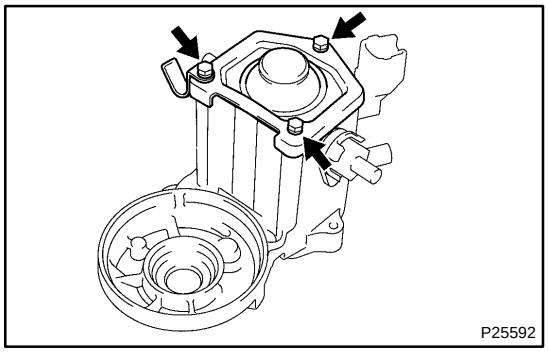

3. REPLACE MAGNETIC SWITCH TERMINAL KIT PARTS

(a) Remove the 3 bolts, lead clamp (1.8 kw) end cover, gasket and plunger.

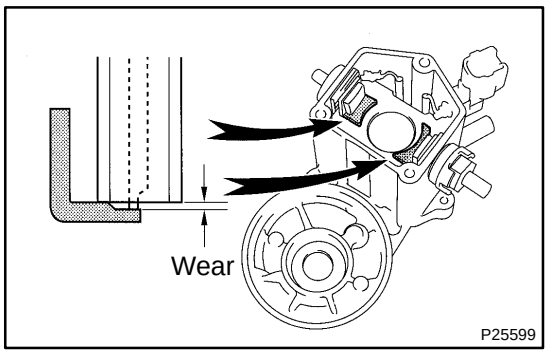

(b) Using vernier calipers, measure the contact plate for depth of wear.

Maximum wear: 0.9 mm (0.035 in.)

If the depth of wear is greater than the maximum, replace the contact plate.

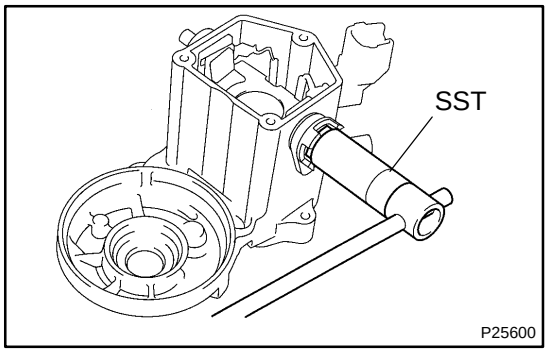

(c) Remove the terminal kit parts.

(1) Using SST, loosen the terminal nuts.

SST 09810–38140

(2) Terminal C:

Remove the terminal nut, wave washer, terminal insulator (outside), O–ring, terminal bolt, contact plate and terminal insulator (inside).

(3) Terminal 30:

Remove the terminal nut, wave washer, terminal insulator (outside), packing, O–ring, terminal bolt, contact plate, terminal insulator (inside) and insulation paper.

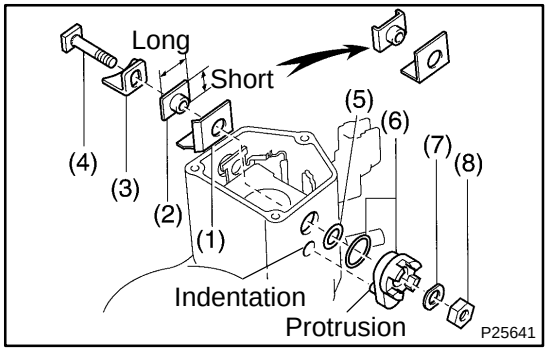

(d) Temporarily install these new terminal 30 kit parts:

(1) Insulation paper

(2) Terminal insulator (inside)

NOTICE:

Be careful to install the terminal insulator (inside) in the correct direction.

(3) Contact plate

(4) Terminal bolt

(5) O–ring

(6) Packing and terminal insulator (outside)

Install the packing to the terminal insulator, and install them.

HINT:

Match the protrusion of the insulator with the indentation of the housing.

(7) Wave washer

(8) Terminal nut

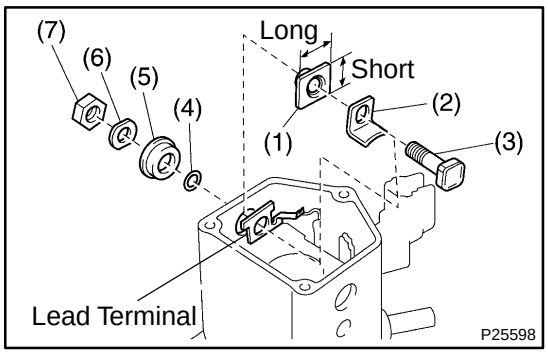

(e) Temporarily install these new terminal C kit parts:
(1) Terminal insulator (inside)

NOTICE:

Be careful to install the terminal insulator (inside) in the correct direction.

(2) Contact plate
(3) Terminal bolt
(4) O–ring
(5) Terminal insulator (outside)
(6) Wave washer
(7) Terminal nut

(f) Temporarily tighten the terminal nuts.

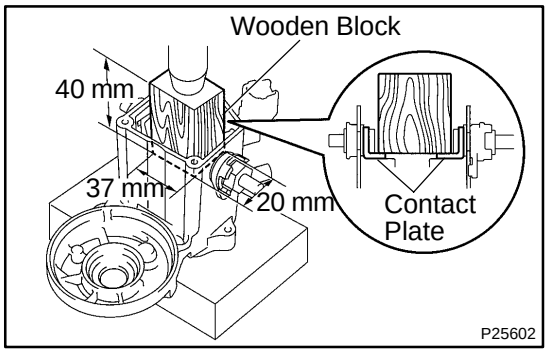

(g) Tighten the terminal nuts.
(1) Put a wooden block on the contact plate and press it down with a hand press.

Dimensions of wooden block:
20 x 37 x 40 mm (0.79 x 1.46 x 1.57 in.)
Press force: 981 N (100 kgf, 221 lbf)

NOTICE:

- **Check the diameter of the hand press ram. Then calculate the gauge pressure of the press when 981 N (100 kgf, 221 lbf) of force is applied.**
  Gauge pressure:

$$(\text{kgf/cm}^2) = \frac{100\ \text{kgf}}{\left(\frac{\text{Ram diameter (cm)}}{2}\right)^2 \times 3.14\ (\pi)}$$

$$(\text{psi}) = \frac{221\ \text{lbf}}{\left(\frac{\text{Ram diameter (in.)}}{2}\right)^2 \times 3.14\ (\pi)}$$

$$(\text{kPa}) = (\text{kgf/cm}^2) \times 98.1$$

$$(\text{kPa}) = (\text{psi}) \times 6.9$$

- **If the contact plate is not pressed down with the specified pressure, the contact plate may tilt due to coil deformation or the tightening of the nut.**

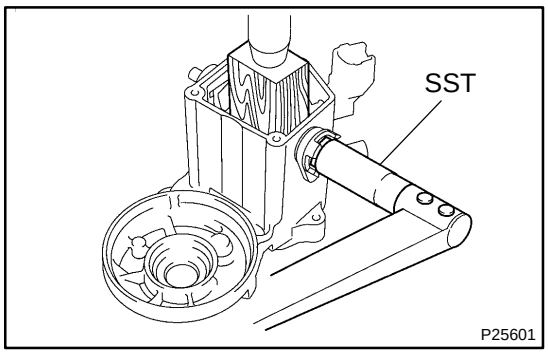

(2) Using SST, tighten the nuts to the specified torque.
SST 09810–38140
Torque: 17 N·m (173 kgf·cm, 13 ft·lbf)

NOTICE:
If the nut is over tightened, it may cause cracks on the inside of the insulator.

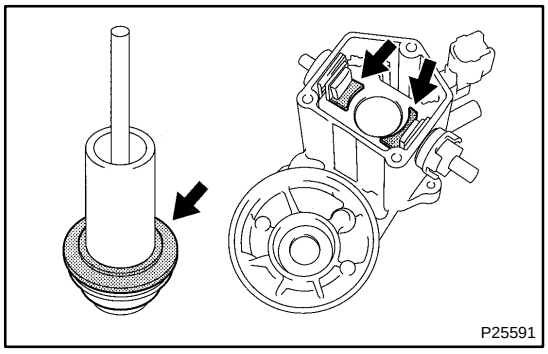

(h) Clean the contact surfaces of the remaining contact plate and plunger with a dry shop rag.

(i) Reinstall the plunger, a new gasket, the end cover and lead clanp (1.8 kW) with the 3 bolts.
Torque:
2.5 N·m (25 kgf·cm, 22 in.·lbf) for 1.4 kW
3.6 N·m (37 kgf·cm, 32 in.·lbf) for 1.8 kW

ST01P–02

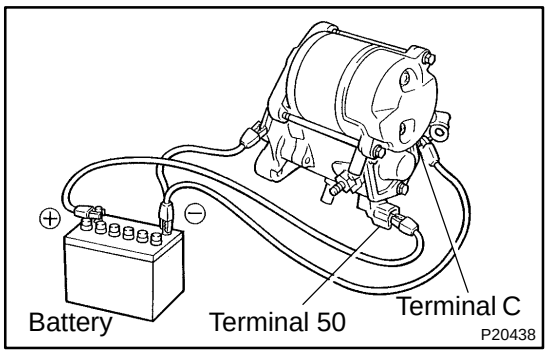

TEST

NOTICE:

These tests must be done within 3 to 5 seconds to avoid burning out the coil.

1. DO PULL–IN TEST

(a) Disconnect the field coil lead wire from terminal C.

(b) Connect the battery to the magnetic switch as shown. Check that the clutch pinion gear moves outward.

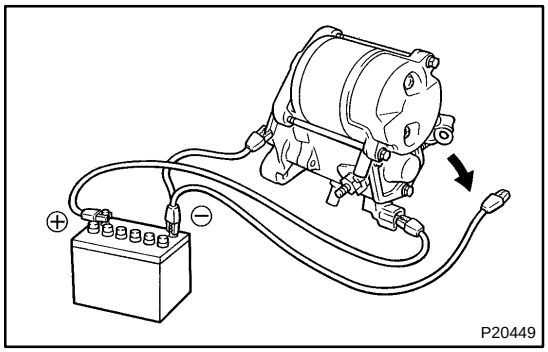

2. DO HOLD–IN TEST

With battery connected as above with the clutch pinion gear out, disconnect the negative (–) lead from terminal C. Check that the pinion gear remains out.

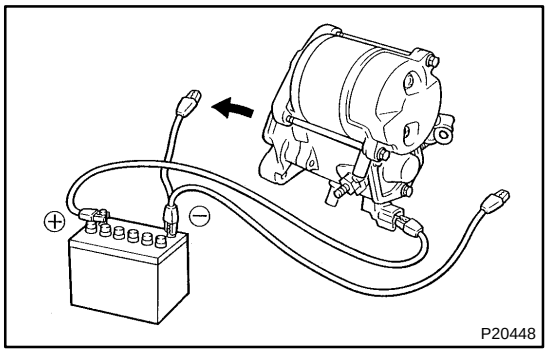

3. INSPECT CLUTCH PINION GEAR RETURN

Disconnect the negative (–) lead from the switch body. Check that the clutch pinion gear returns inward.

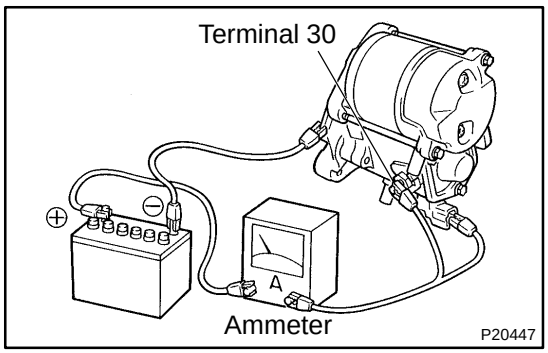

4. DO NO–LOAD PERFORMANCE TEST

(a) Connect the battery and ammeter to the starter as shown.

(b) Check that the starter rotates smoothly and steadily with the pinion gear moving out. Check that the ammeter reads the specified current.

Specified current:

1.4 kW	90 A or less at 11.5 V
1.8 kW	100 A or less at 11.5 V

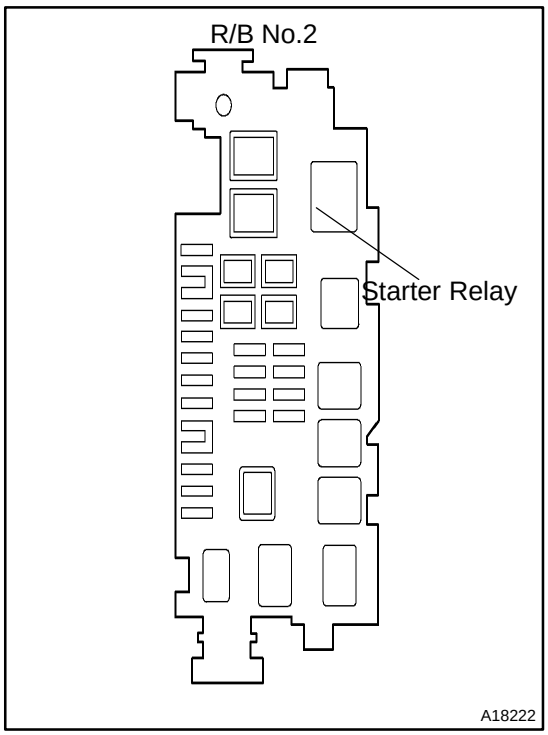

STARTER RELAY

ST0I1–02

INSPECTION

1. REMOVE STARTER RELAY (Marking: ST)

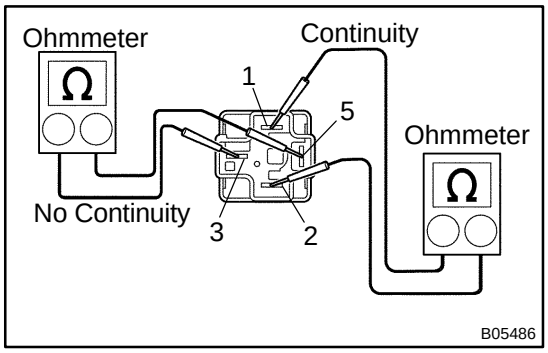

2. INSPECT STARTER RELAY

(a) Inspect the relay continuity.

(1) Using an ohmmeter, check that there is continuity between terminals 1 and 2.

If there is no continuity, replace the relay.

(2) Check that there is no continuity between terminals 3 and 5.

If there is continuity, replace the relay.

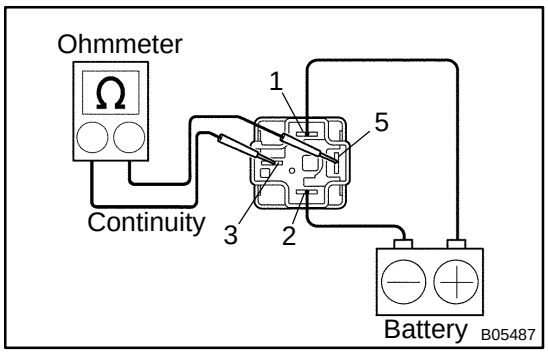

(b) Inspect the relay operation.

(1) Apply battery positive voltage across terminals 1 and 2.

(2) Using an ohmmeter, check that there is continuity between terminals 3 and 5.

If there is no continuity, replace the relay.

3. REINSTALL STARTER RELAY

STARTING SYSTEM

ST0HW–01

ON–VEHICLE INSPECTION

NOTICE:

Before changing the starter, check the following items again:

- **Connector connection**
- **Accessory installation, e.g.: theft deterrent system**

DRIVEN SPROCKET

COMPONENTS

TR015–01

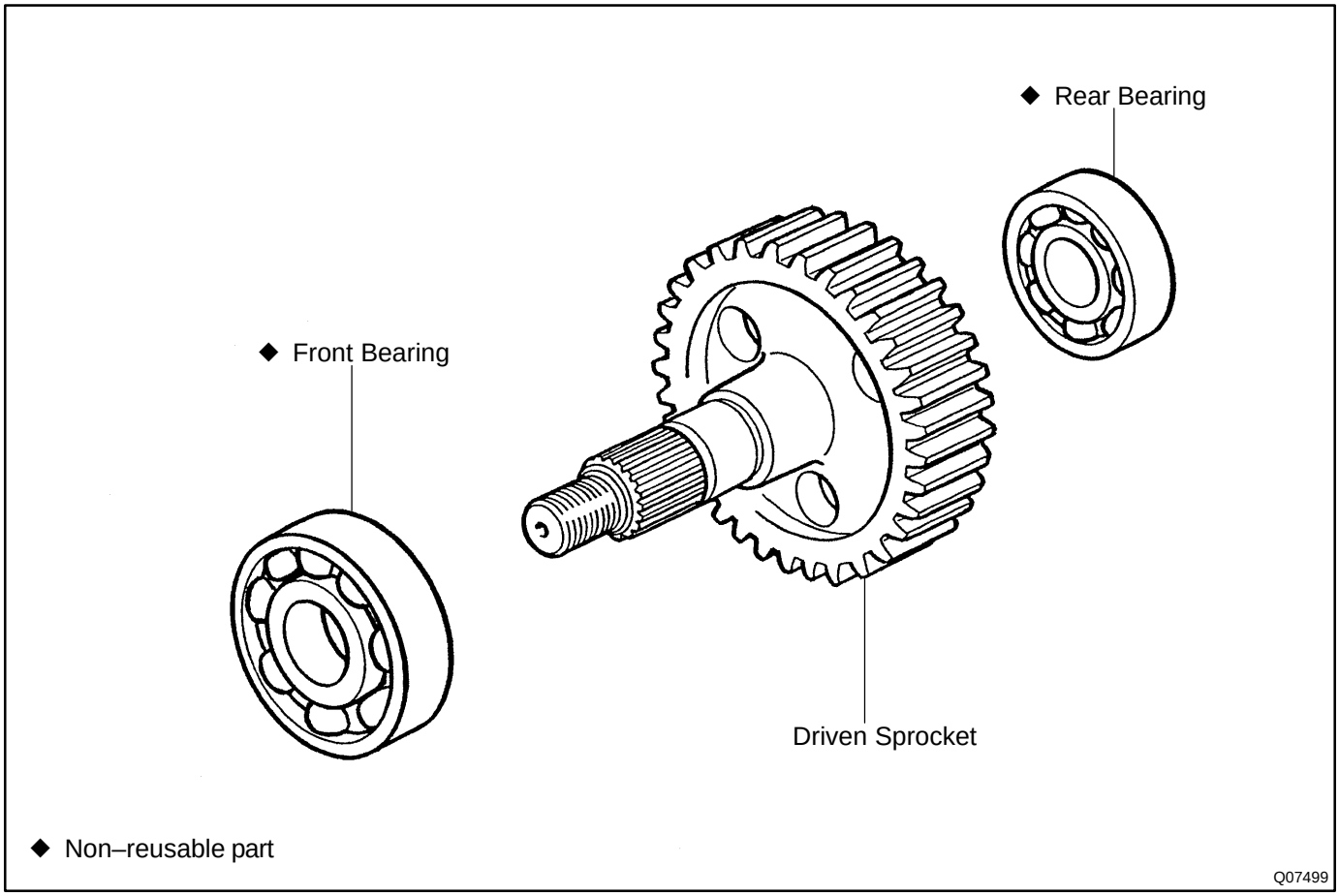

TR016–01

REPLACEMENT

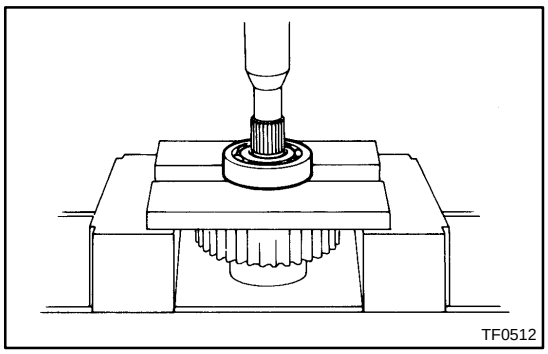

1. REMOVE FRONT BEARING

Using a press, remove the front bearing.

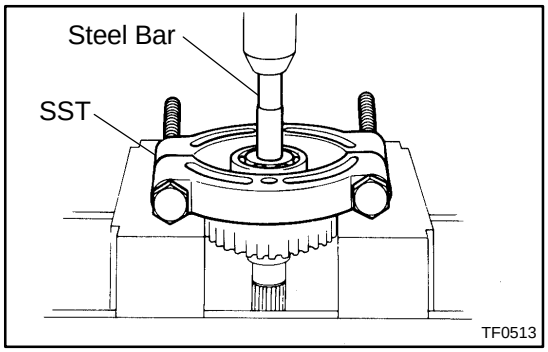

2. REMOVE REAR BEARING

Using SST and a press, remove the rear bearing.

SST 09555–55010

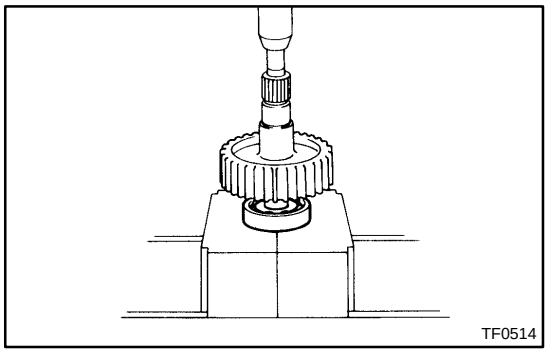

3. INSTALL REAR BEARING

Using a press, install a new rear bearing.

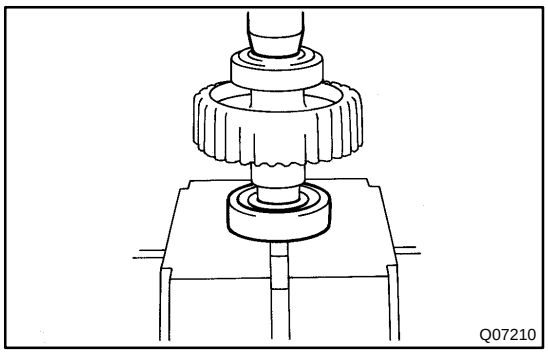

4. INSTALL FRONT BEARING

Using a press, install a new front bearing.

INPUT SHAFT

COMPONENTS

TR01B–01

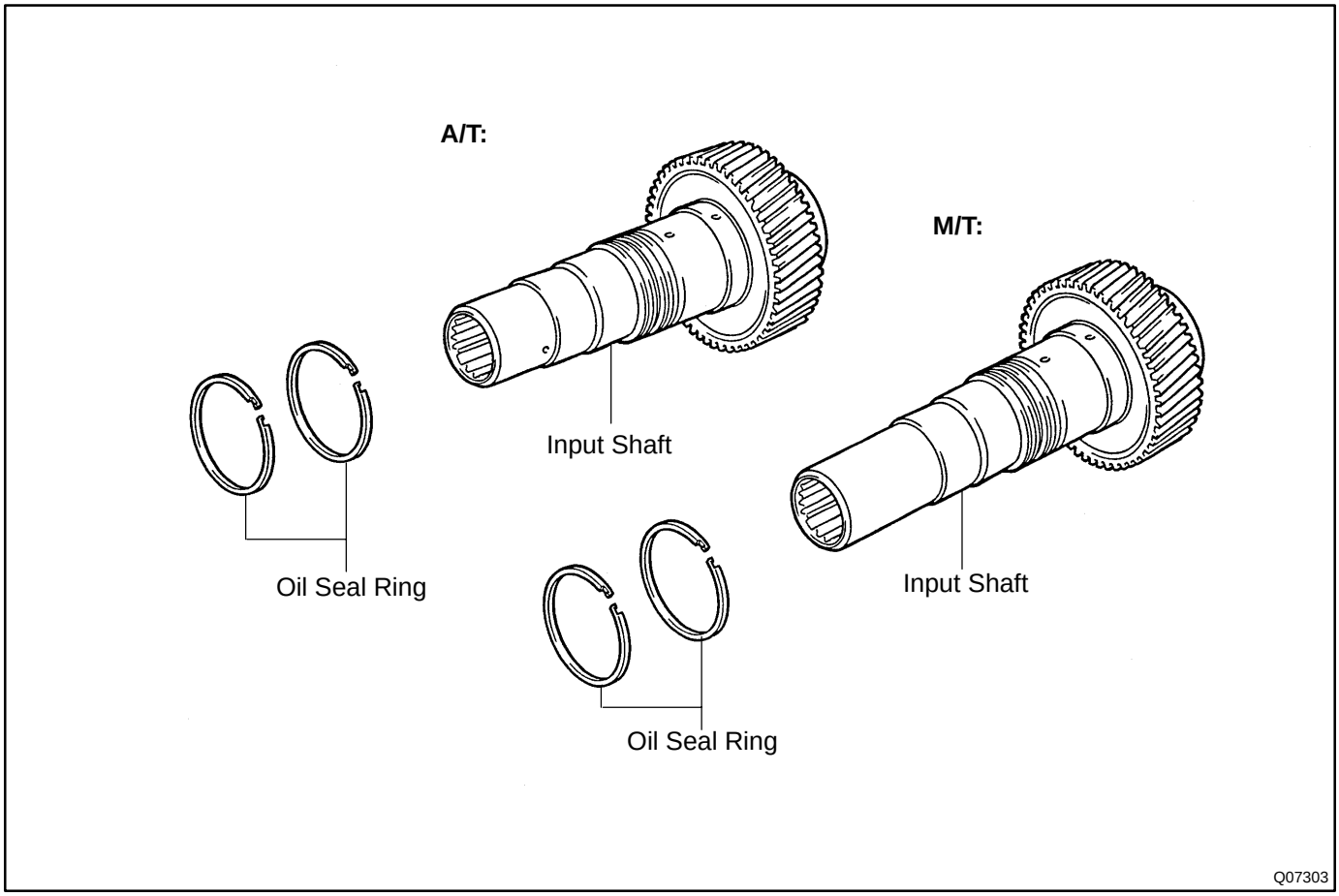

TR01C–01

INSPECTION

1. REMOVE OIL SEAL RINGS

Remove the 2 oil seal rings.

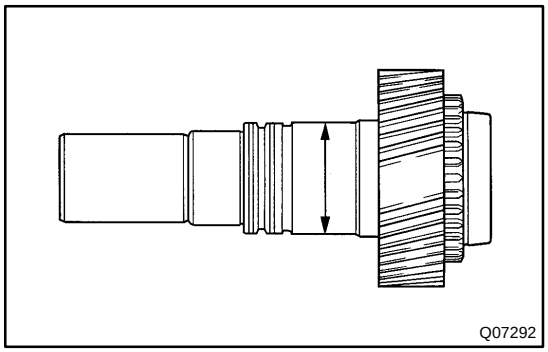

2. INSPECT INPUT SHAFT

(a) Using a micrometer, measure the outer diameter of the input shaft journal surface.

Minimum diameter: 47.59 mm (1.8736 in.)

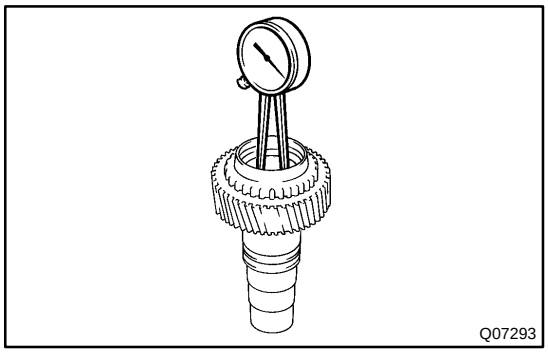

(b) Using a dial indicator, measure the inside diameter of the input shaft bushing.

Maximum inside diameter: 39.14 mm (1.5409 in.)

If the inside diameter exceeds the maximum, replace the input shaft.

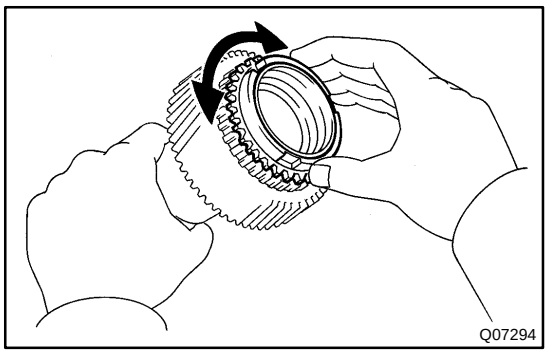

3. M/T:
INSPECT SYNCHRONIZER RING

(a) Turn the ring and push it in to check the braking action.

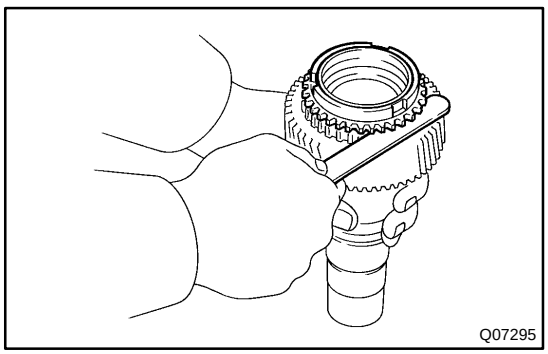

(b) Measure the clearance between the synchronizer ring back and the input shaft spline end.

Standard clearance:
1.05 – 1.85 mm (0.0413 – 0.0728 in.)
Minimum clearance: 0.80 mm (0.0315 in.)

If the clearance is less than the minimum, replace the synchronizer ring.

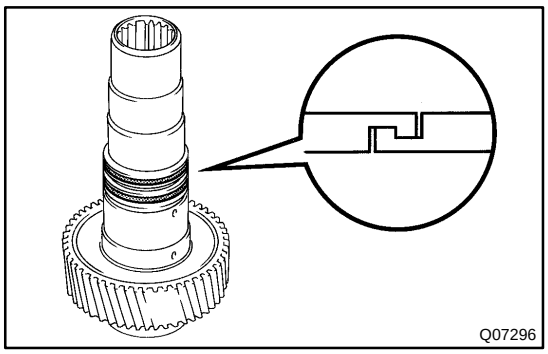

4. INSTALL OIL SEAL RINGS

Install the 2 oil seal rings.

HINT:

- Apply gear oil to the oil seal ring.
- Hang securely to eliminate clearance.

OIL SEAL

COMPONENTS

TR01F–01

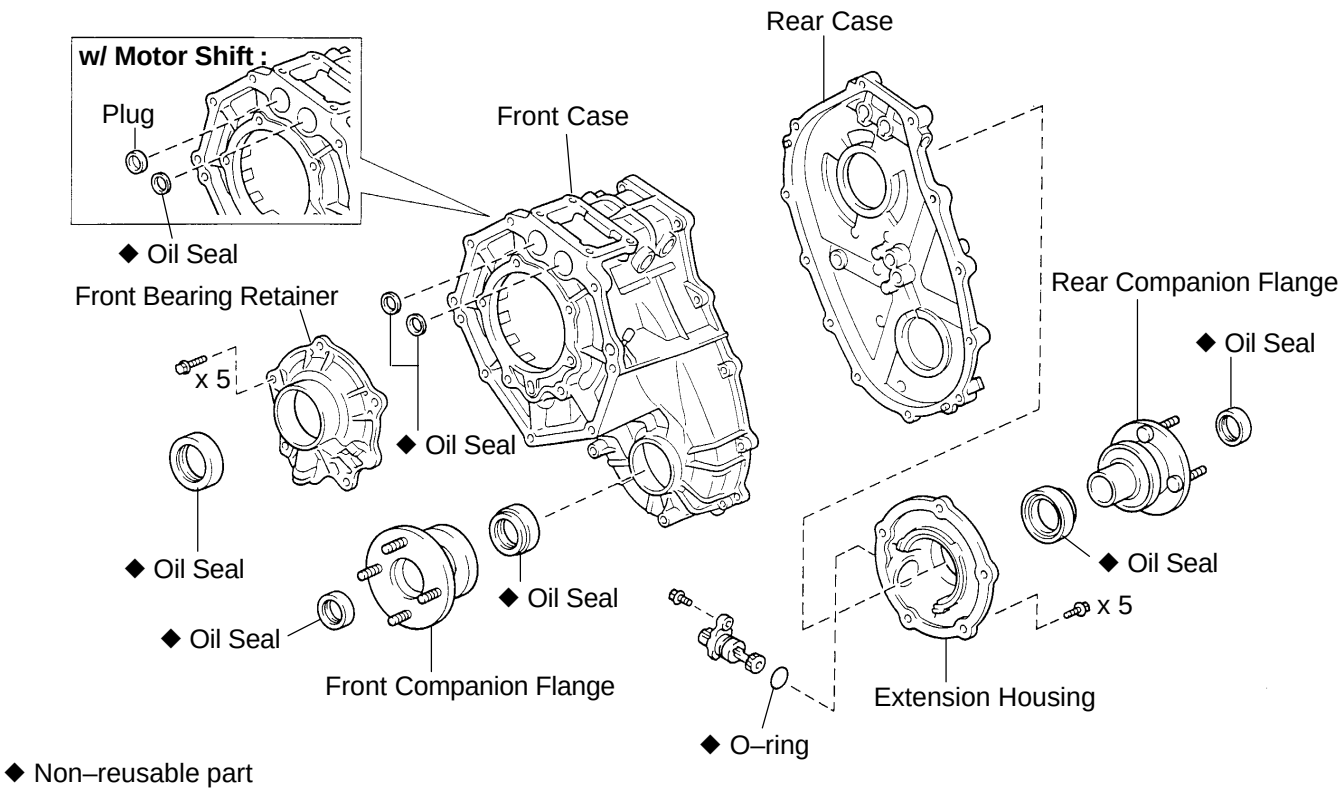

TR01G–01

REPLACEMENT

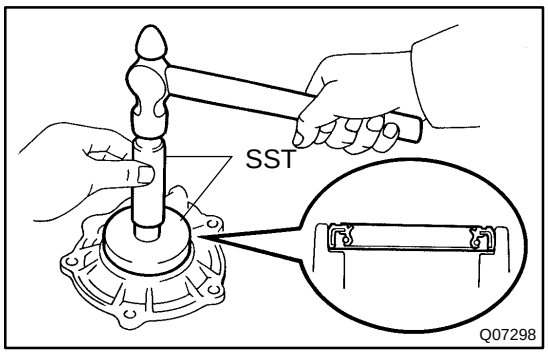

1. IF NECESSARY, REPLACE FRONT BEARING RETAINER OIL SEAL

(a) Using a screwdriver and hammer, drive out the oil seal.

(b) Using SST and a hammer, drive in a new oil seal until its surface is flush with the retainer upper surface.
SST 09950–60010 (09951–00590), 09950–70010 (09951–07100)

(c) Coat the lip of the oil seal with MP grease.

2. IF NECESSARY, REPLACE FRONT CASE OIL SEAL

(a) Using a screwdriver and hammer, drive out the oil seal.

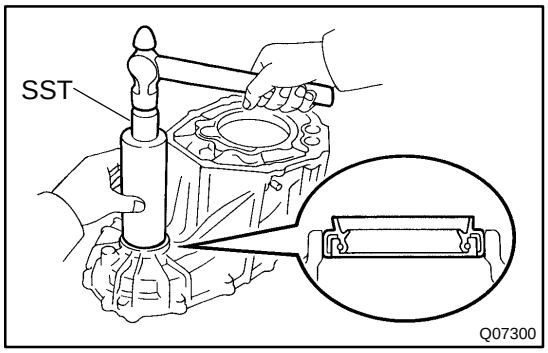

(b) Using SST and a hammer, drive in a new oil seal until its surface is flush with the case upper surface.
SST 09316–60011 (09316–00011)

(c) Coat the lip of the oil seal with MP grease.

3. IF NECESSARY, REPLACE EXTENSION HOUSING OIL SEAL

(a) Using a screwdriver and hammer, drive out the oil seal.

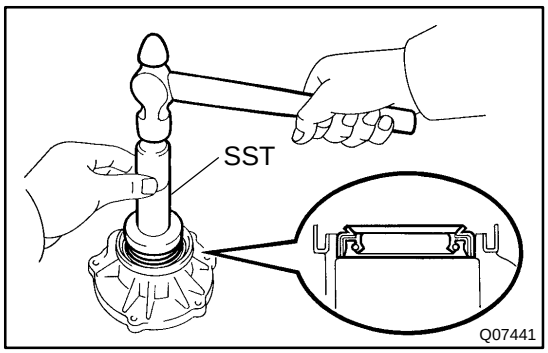

(b) Using SST and a hammer, drive in a new oil seal until its surface is flush with the housing upper surface.
SST 09554–22010

(c) Coat the lip of the oil seal with MP grease.

4. IF NECESSARY, REPLACE FRONT AND REAR COMPANION FLANGE OIL SEALS

(a) Using a screwdriver and hammer, drive out the oil seals from the 2 flanges.

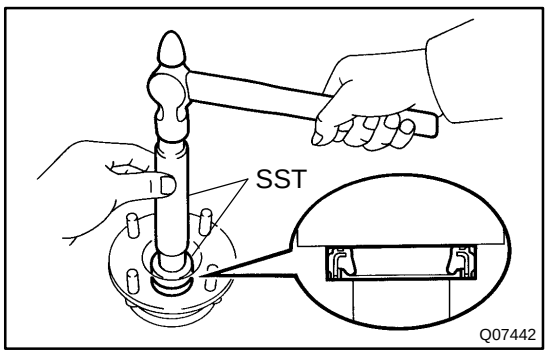

(b) Using SST and a hammer, drive in a new oil seal.
SST 09950–60010 (09951–00220, 09951–00350, 09952–06010), 09950–70010 (09951–07100)

(c) Coat the lip of the oil seal with MP grease.

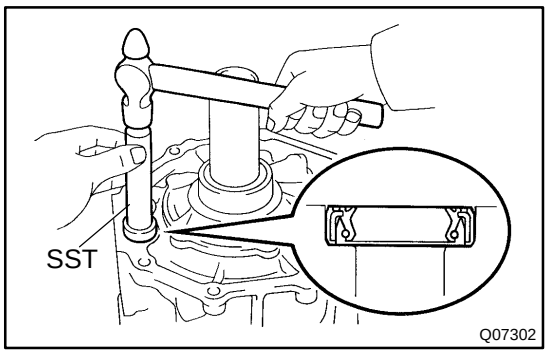

5. IF NECESSARY, REPLACE SHIFT FORK SHAFT OIL SEALS

(a) Using a screwdriver, pry out the oil seal.

(b) Using SST and a hammer, drive in a new oil seal.
SST 09304–12012
Oil seal depth: –0.5 – 0.5 mm (–0.020 – 0.020 in.)

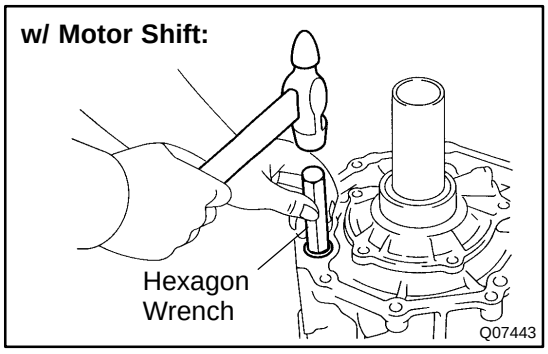

6. w/ One touch 2–4 selector system: Only when replacing the front case
IF NECESSARY, REPLACE PLUG

Using a hexagon wrench (19 mm) and hammer, drive in a new plug.

OIL PUMP BODY

COMPONENTS

TR013–01

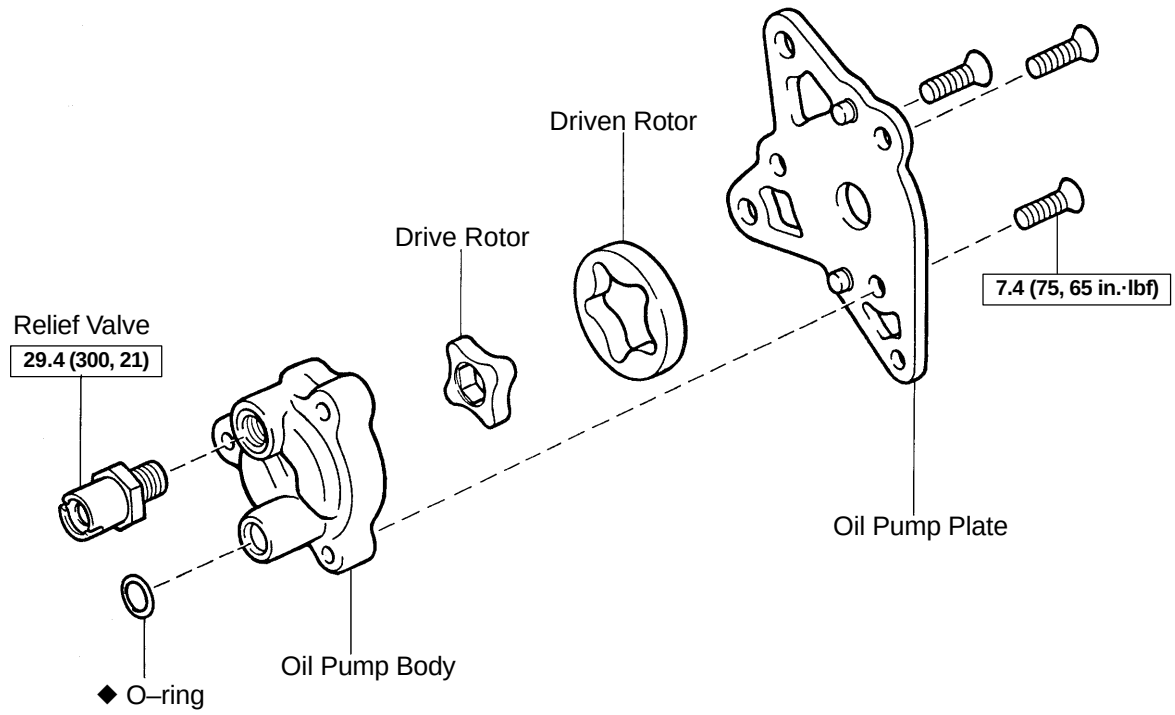

N·m (kgf·cm, ft·lbf) : Specified torque
◆ Non–reusable part

Q07245

TR014–01

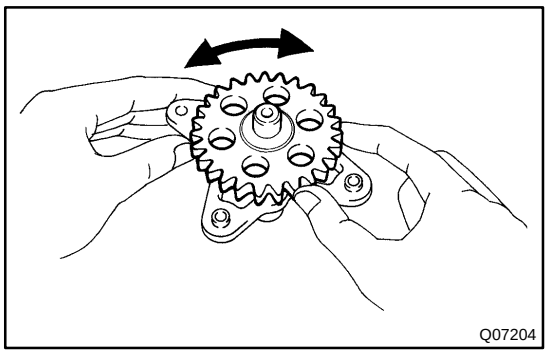
Q07204

INSPECTION

1. CHECK OIL PUMP OPERATION

Install the oil pump drive gear to the drive rotor, check that the drive rotor turns smoothly.

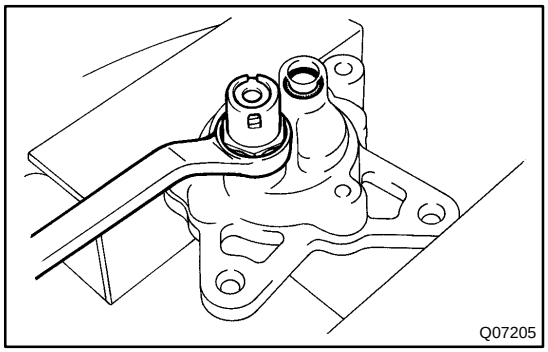
Q07205

2. INSPECT ROTORS CLEARANCE

(a) Remove the relief valve and O–ring.
  (1) Mount the oil pump plate in a vise.
  (2) Remove the relief valve and O–ring from the oil pump body.
  Torque: 29.4 N·m (300 kgf·cm, 21 ft·lbf)

HINT:
At the time of installation, coat a new O–ring with gear oil and install it to the oil pump body.

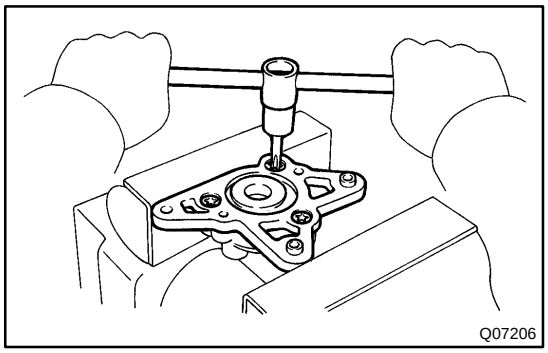
Q07206

(b) Remove the oil pump plate.
  (1) Using a torx socket wrench, unscrew the 3 torx screws. (Torx socket wrench T30 09042–00010)
  Torque: 7.4 N·m (75 kgf·cm, 65 in.·lbf)
  (2) Remove the oil pump plate.

(c) Remove the drive rotor and driven rotor.

HINT:
At the time of installation, apply gear oil to the both rotors.

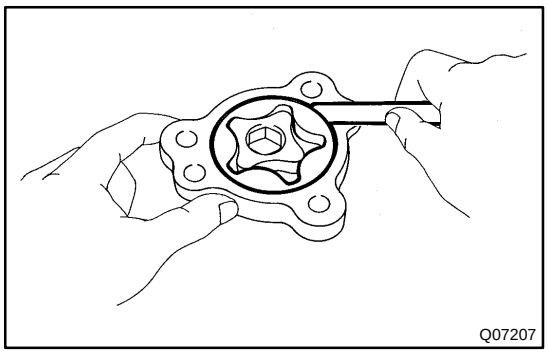
Q07207

(d) Inspect the driven rotor body clearance.
  (1) Push the driven rotor to one side of the body.
  (2) Using a feeler gauge, measure the clearance.
  Standard clearance:
  0.09 – 0.16 mm (0.0035 – 0.0063 in.)
  Maximum clearance: 0.16 mm (0.0063 in.)

If the clearance exceeds the maximum, replace the drive rotor, driven rotor or pump body.

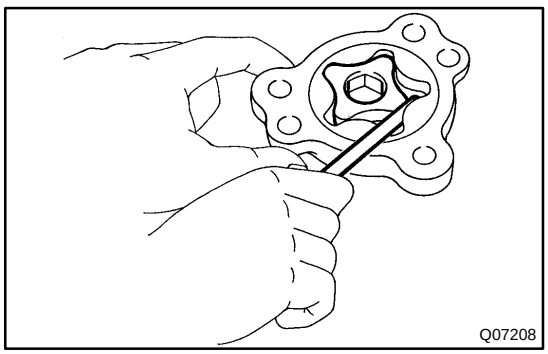
Q07208

(e) Inspect the both rotor tips clearance.
  Using a feeler gauge, measure the clearance between both rotor tips.
  Standard clearance:
  0.05 – 0.15 mm (0.0020 – 0.0059 in.)
  Maximum clearance: 0.15 mm (0.0059 in.)

If the clearance exceeds the maximum, replace the drive rotor, driven rotor or pump body.

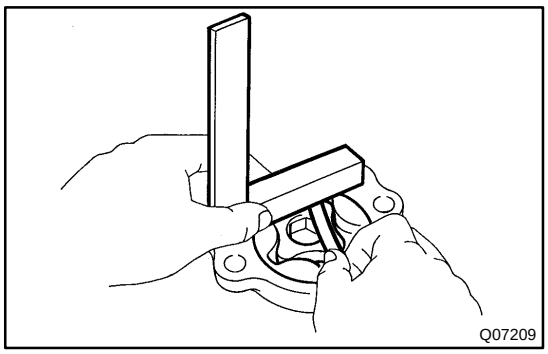

(f) Inspect the both rotors side clearance.
Using a steel straight edge and feeler gauge, measure the clearance between the rotors and straight edge.
Standard clearance:
0.03 – 0.10 mm (0.0012 – 0.0039 in.)
Maximum clearance: 0.10 mm (0.0039 in.)

If the clearance exceeds the maximum, replace the drive rotor, driven rotor or pump body.

3. ASSEMBLE REMOVAL PARTS

HINT:

Assemble is in the reverse order of disassembly.

TR01I–01

INSPECTION

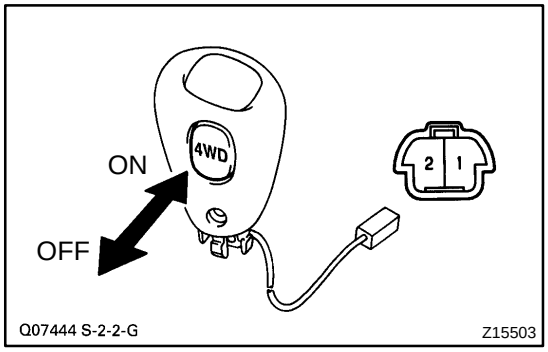

1. INSPECT 2–4 SELECTOR SWITCH CONTINUITY

Switch position	Tester connection to terminal number	Specified condition
OFF	1 – 2	No continuity
ON	1 – 2	Continuity

If continuity is not as specified, replace the shift lever knob.

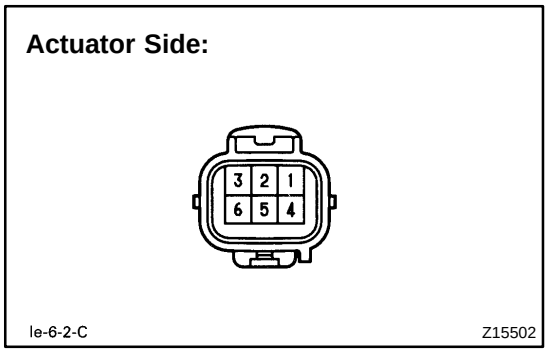

2. INSPECT ACTUATOR RESISTANCE

(a) Using an ohmmeter, measure the resistance between terminals 2 and 3.
Standard resistance: 0.3 – 100 Ω

(b) Using an ohmmeter, measure the resistance between terminals 2 or 3 and body ground.
Standard resistance: More than 0.5 MΩ

If resistance value is not as specified, replace the actuator assembly.

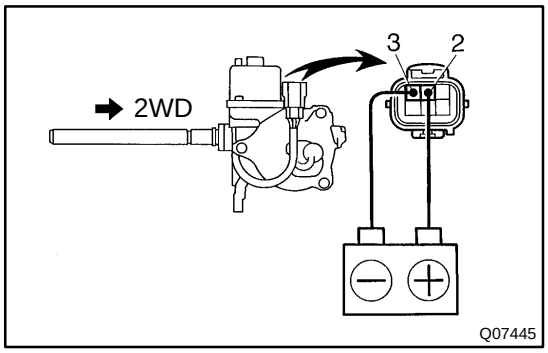

3. INSPECT ACTUATOR OPERATION

(a) Connect the positive (+) lead from the battery to terminal 2 and the negative (–) lead to terminal 3, then check that the actuator fork shaft moves to 2WD position.

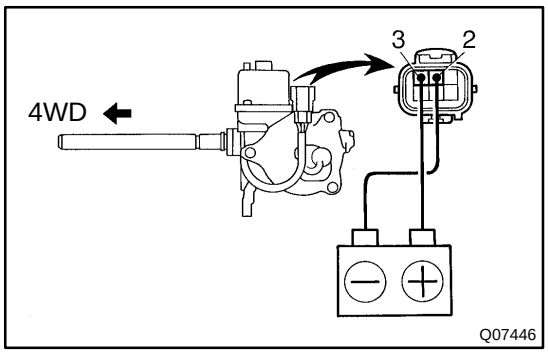

(b) Connect the positive (+) lead from the battery to terminal 3 and the negative (–) lead to terminal 2, then check that the actuator fork shaft moves to 2WD position.

If operation is not as specified, replace the actuator assembly.

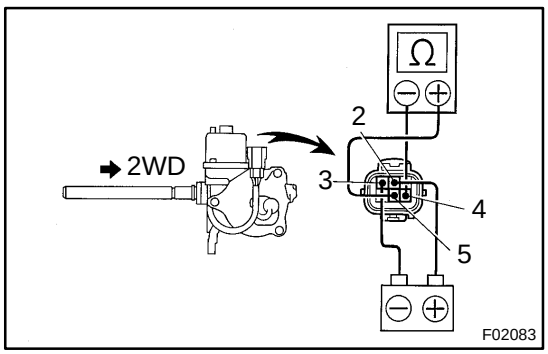

4. INSPECT LIMIT SWITCH CONTINUITY

(a) Connect the positive (+) lead from the battery to terminal 2 and the negative (–) lead to terminal 3.

(b) Connect the positive (+) lead from the ohmmeter to terminal 5 and the negative (–) lead to terminal 4.

(c) Check that there is continuity between terminals 4 and 5.

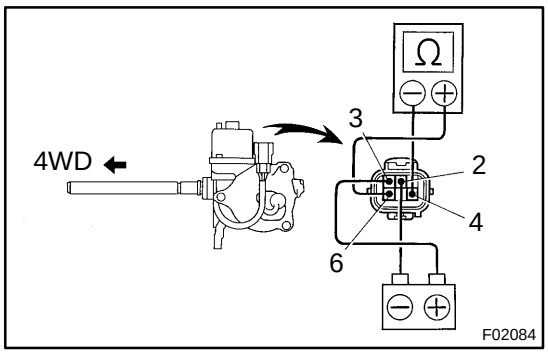

(d) Connect the positive (+) lead from the battery to terminal 3 and the negative (–) lead to terminal 2.
(e) Connect the positive (+) lead from the ohmmeter to terminal 6 and the negative (–) lead to terminal 4.
(f) Check that there is continuity between terminal 4 and 6.

If continuity is not as specified, replace the actuator assembly.

5. INSPECT NO.1 VEHICLE SPEED SENSOR
(See page BE–39)

6. INSPECT 4WD INDICATOR LAMP

Check the combination meter.
(See page BE–37)

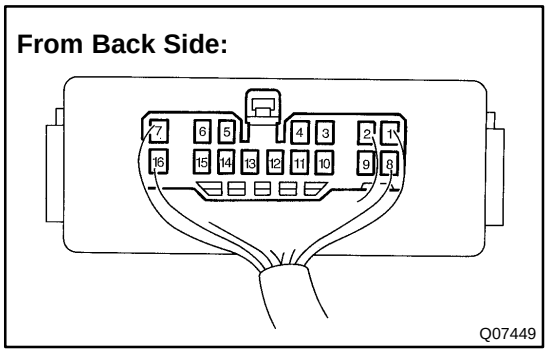

7. w/ One touch 2–4 selector system:
INSPECT 4WD CONTROL ECU

Connect the wire harness side connector to the ECU and inspect wire harness side connector from the back side, as shown.

STANDARD VALUE OF ECU TERMINAL

Terminals (Symbols)	Condition	STD Voltage (V)
1 (IND) – 8 (GND)	• Engine Running • 2WD → 4WD (4WD Indicator light light up)	12 ~ 16 → 1.2 or less
3 (M1) – 2 (M2)	• Ignition switch ON • 2WD → 4WD (2–4 Selector switch ON or transfer shift lever L4 position)	0.5 or less → 10 ~ 14 (for about 5 second) then less than 0.5
	4WD (2–4 Selector switch ON or transfer shift lever L4 position) → 2WD (2–4 selector switch OFF and transfer shift lever H position)	10 ~ 14 (for about 5 second) then less than 0.5
	2WD (2–4 selector switch OFF and transfer shift lever H position)	10 ~ 14 (for about 5 second) then less than 0.5
4 (V4) – 8 (GND)	• Ignition switch ON • 4WD (2–4 Selector switch ON and transfer shift lever H position or 2–4 selector switch OFF and transfer shift lever L4 position) • A.D.D. VSV Temp. 20 ˚C (68 ˚F)	9 or less (after 0.1 second)
	• Ignition switch ON • 4WD (2–4 Selector switch ON and transfer shift lever H position or 2–4 selector switch OFF and transfer shift lever L4 position) • A.D.D. VSV Temp. 120 ˚C (248 ˚F)	13 or less (after 0.1 second)

5 (SPD) – 8 GND)	• Ignition switch ON • During driving	Repeatedly changes from below 0.5 or less to 4 or more
6 (4WD) – 8 (GND)	• Ignition switch ON • 4WD (2–4 Selector switch ON and transfer shift lever H position or 2–4 selector switch OFF and transfer shift lever L4 position)	2 or less
8 (GND) – Body Ground	Constant	Continuity
9 (RL–2) – 8 (GND)	• Ignition switch ON • 4WD (2–4 selector switch ON or transfer shift lever L4 position) → 2WD (2–4 selector switch OFF and transfer shift lever H position)	0.5 or less → 10 ~ 14 then 0.5 (after 5 second)
10 (RL–1) – 8 (GND)	• Ignition switch ON • 2WD (2–4 selector switch OFF and transfer shift lever H position) → 4WD (2–4 selector switch ON or transfer shift lever L4 position)	0.5 or less → 10 ~ 14 then 0.5 (after 5 second)
11 (V2) – 8 (GND)	• Ignition switch ON • 2WD (2–4 selector switch OFF and transfer shift lever H position) • A.D.D. VSV Temp. 20 ˚C (68 ˚F)	9 or less (after 0.1 second)
	• Ignition switch ON • 2WD (2–4 selector switch OFF and transfer shift lever H position) • A.D.D. VSV Temp. 120 ˚C (248 ˚F)	13 or less (after 0.1 second)
14 (L4) – 8 (GND)	Transfer shift lever H2 (2–4 selector switch OFF and transfer shift lever H position) → L4	10 ~ 14 → 0.5 or less
15 (2–4) – 8 (GND)	2–4 selector switch OFF → ON	10 ~ 14 → 2 or less
16 (IG) – 8 (GND)	Constant	10 ~ 14

ONE TOUCH 2–4 SELECTOR SYSTEM

TR01H–01

LOCATION

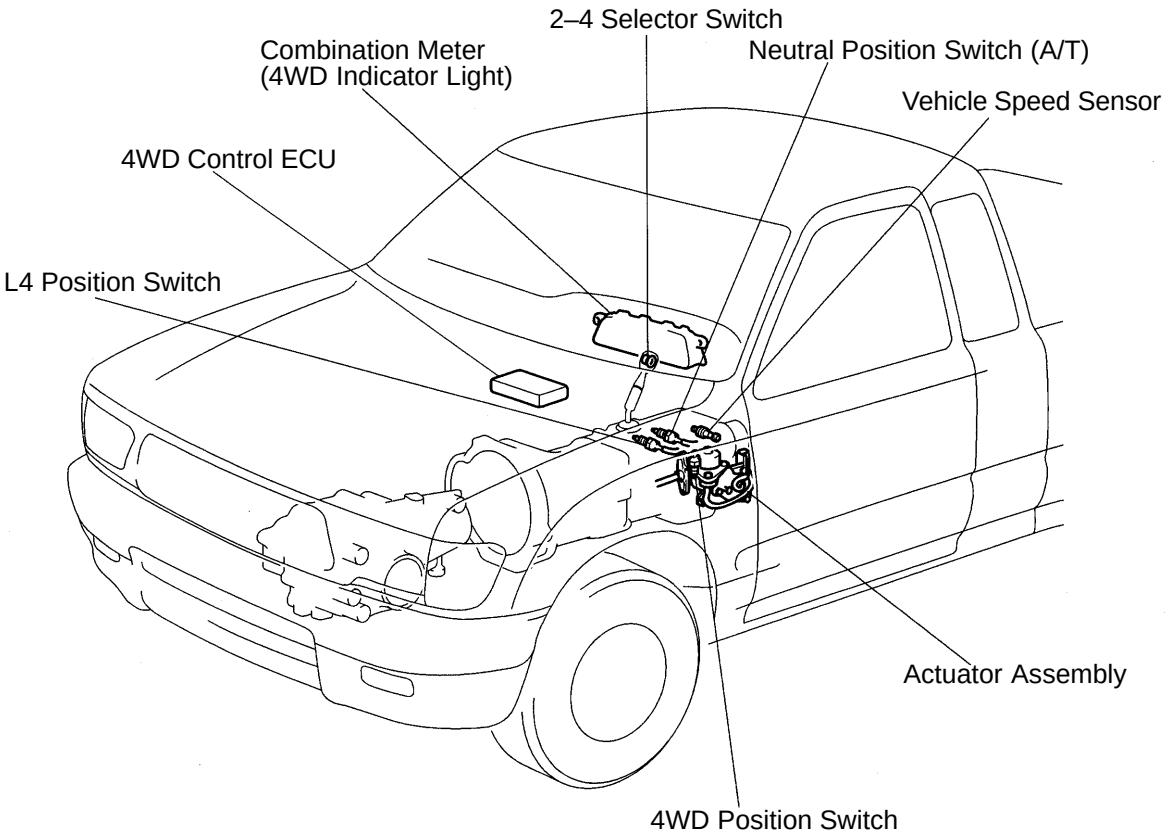

PLANETARY GEAR

COMPONENTS

TR01D–01

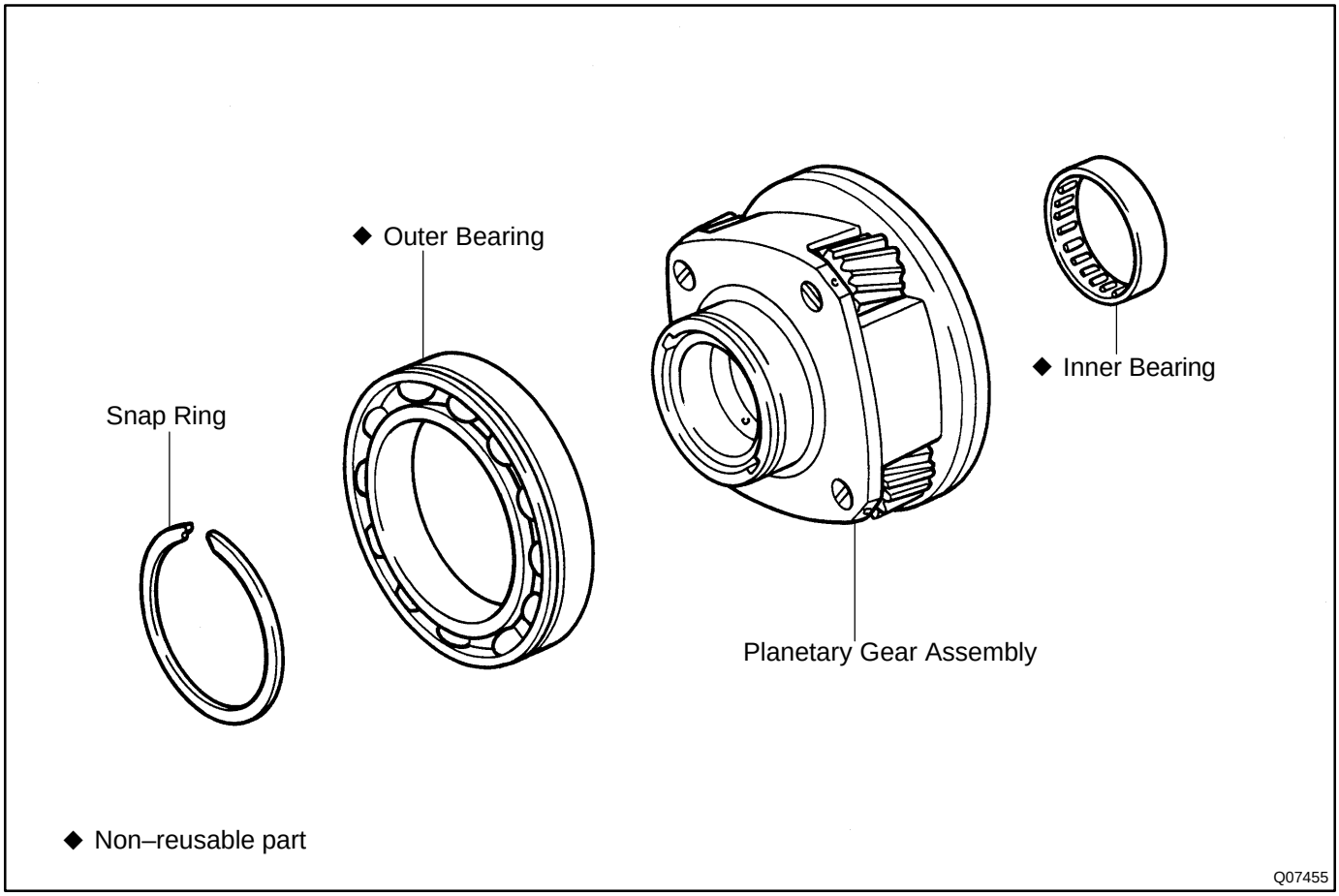

TR01E–01

INSPECTION

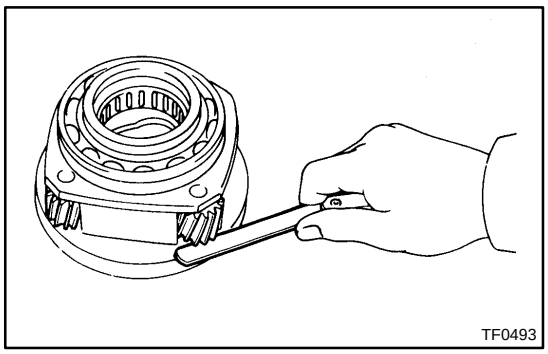
TF0493

1. INSPECT PINION GEAR THRUST CLEARANCE

Using a feeler gauge, measure the planetary pinion gear thrust clearance.

Standard clearance:
0.11 – 0.84 mm (0.0043 – 0.0331 in.)
Maximum clearance: 0.84 mm (0.0331 in.)

If the clearance exceeds the maximum, replace the planetary gear assembly.

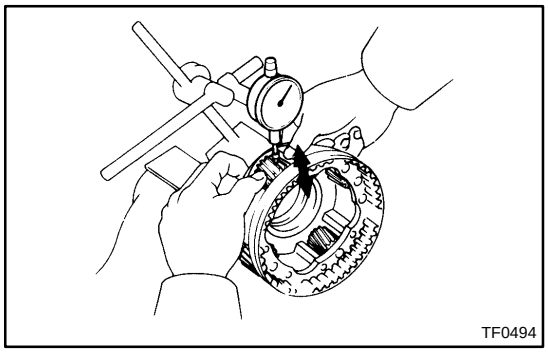
TF0494

2. INSPECT PLANETARY PINION GEAR RADIAL CLEARANCE

Using a dial indicator, measure the radial clearance of the planetary pinion gear.

Standard clearance:
0.009 – 0.038 mm (0.0004 – 0.0015 in.)
Maximum clearance: 0.038 mm (0.0015 in.)

If the clearance exceeds the maximum, replace the planetary gear assembly.

3. IF NECESSARY, REPLACE PLANETARY GEAR OUTER BEARING

(a) Using a snap ring expander, remove the snap ring.

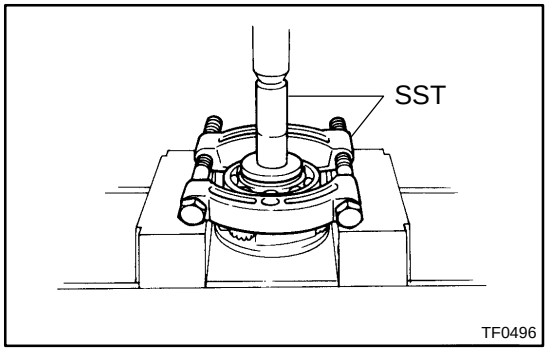

TF0496

(b) Using SST and a press, remove the bearing.
SST 09554–30011, 09555–55010

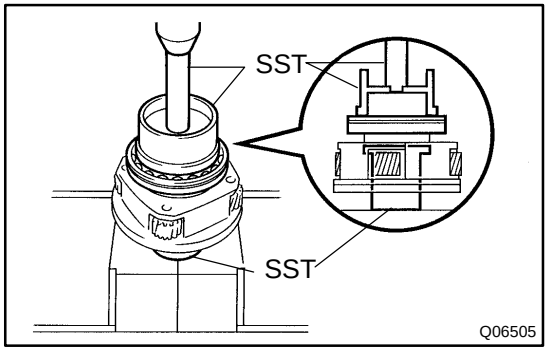

Q06505

(c) Using SST and a press, install a new bearing with the groove faced forward.
SST 09223–15020, 09515–30010,
09950–70010 (09951–07100)

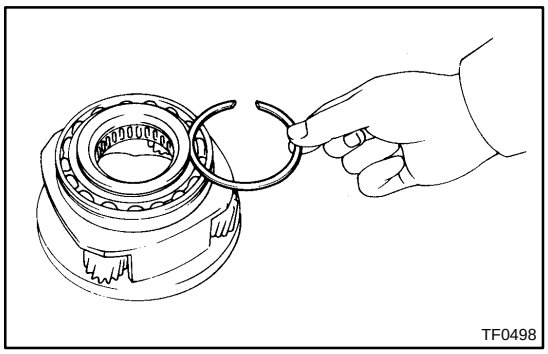
TF0498

(d) Select a snap ring that will allow minimum axial play.

Mark	Thickness mm (in.)
1	1.45 – 1.50 (0.0571 – 0.0591)
2	1.50 – 1.55 (0.0591 – 0.0610)
3	1.55 – 1.60 (0.0610 – 0.0630)
4	1.60 – 1.65 (0.0630 – 0.0650)
5	1.65 – 1.70 (0.0650 – 0.0669)

(e) Using a snap ring expander, install the snap ring.

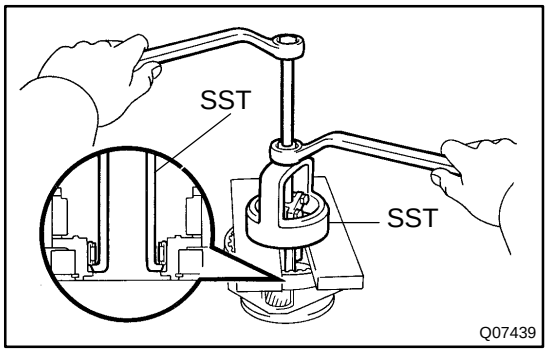

Q07439

4. IF NECESSARY, REPLACE PLANETARY GEAR THRUST INNER BEARING

(a) Using SST and a press, remove the bearing.
SST 09612–65014 (09612–01030, 09612–01050)

NOTICE:
Hang SST securely to the clearance between the thrust inner bearing and planetary gear.

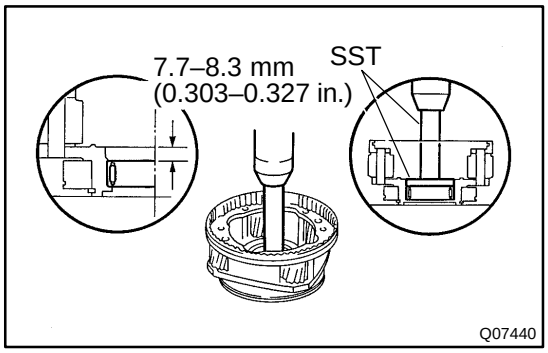

Q07440

(b) Using SST and a press, install a new bearing.
SST 09950–60010 (09951–00570),
09950–70010 (09951–07100)
Bearing depth: 7.7 – 8.3 mm (0.303 – 0.327 in.)

REAR OUTPUT SHAFT

COMPONENTS

TR017–01

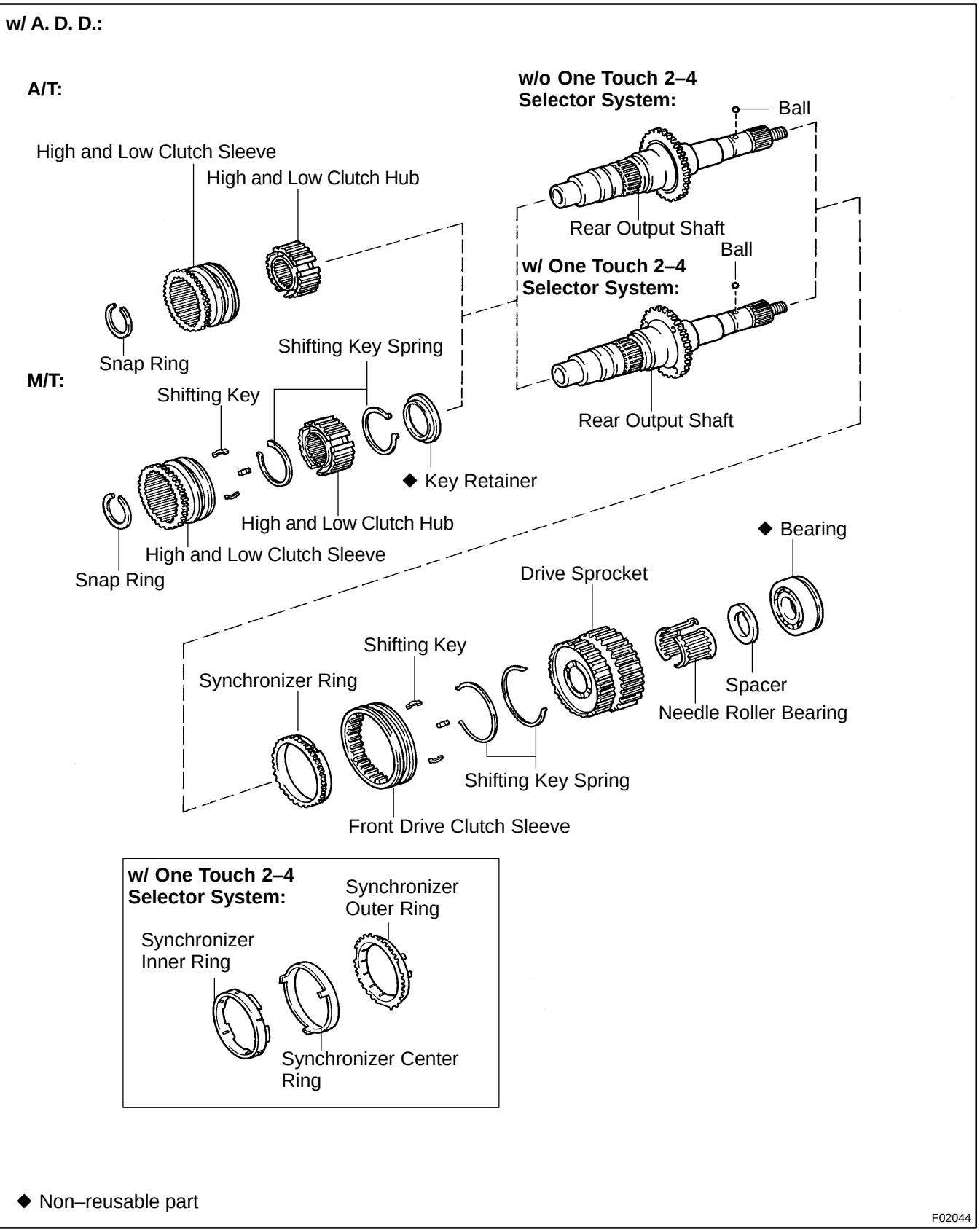

◆ Non–reusable part

F02044

w/o A. D. D.:

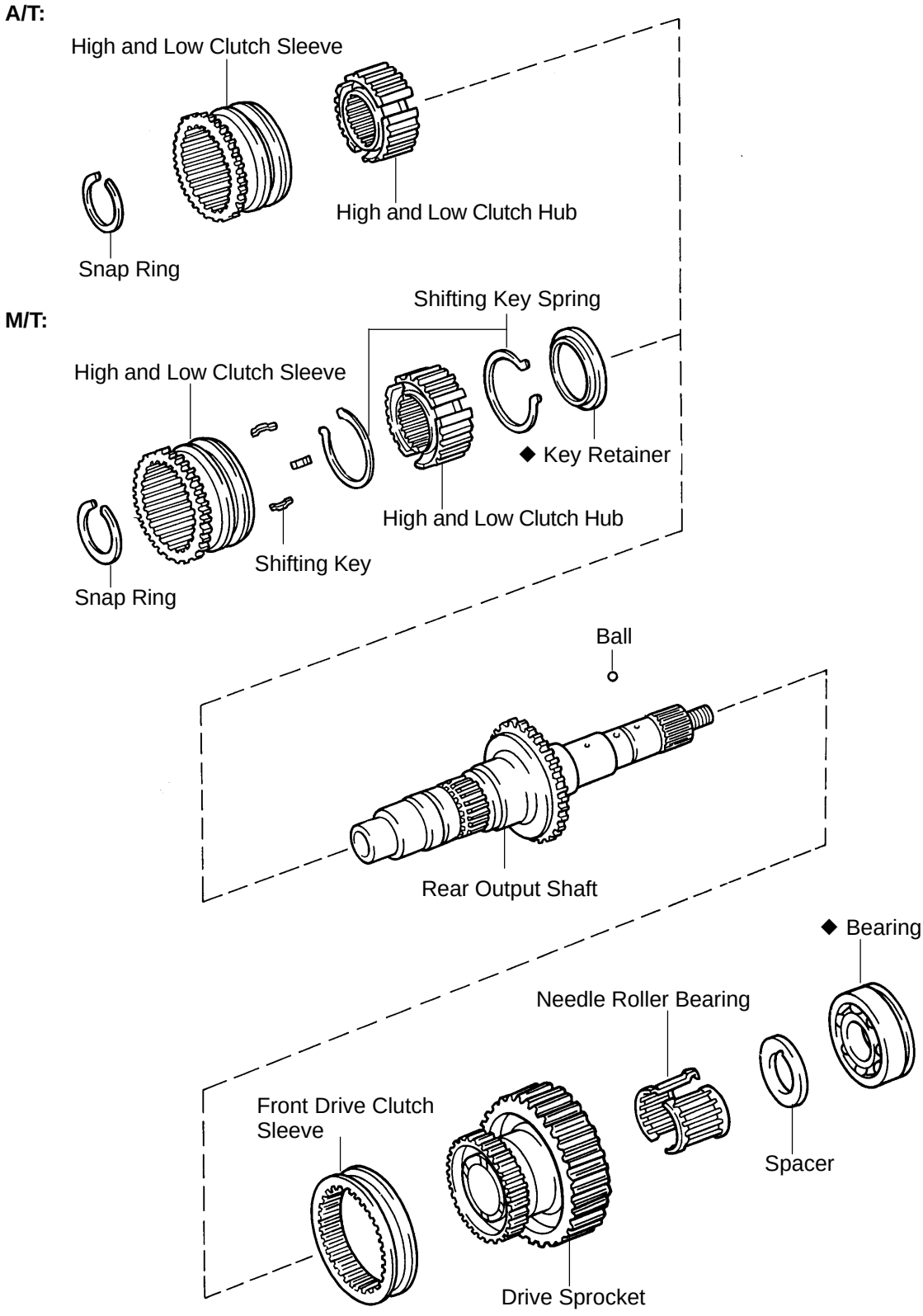

◆ Non–reusable part

F02045

TR018–01

DISASSEMBLY

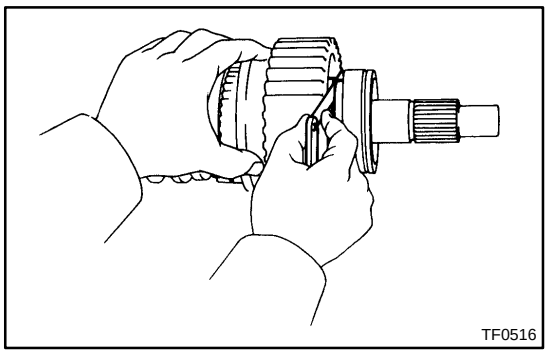
TF0516

1. INSPECT DRIVE SPROCKET THRUST CLEARANCE

Using a feeler gauge, measure the drive sprocket thrust clearance.

Standard clearance:
0.10 – 0.25 mm (0.0039 – 0.0098 in.)
Maximum clearance: 0.25 mm (0.0098 in.)

If the clearance exceeds the maximum, replace the drive sprocket.

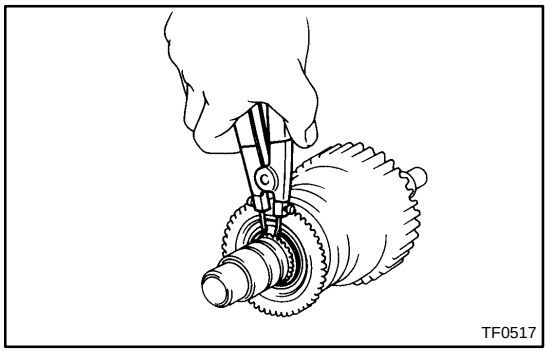
TF0517

2. M/T:
REMOVE HIGH AND LOW CLUTCH SLEEVE ASSEMBLY

(a) Using a snap ring expander, remove the snap ring.
(b) Remove the clutch sleeve and 3 shifting keys.
(c) Using a press, remove the clutch hub, 2 key springs and key retainer.

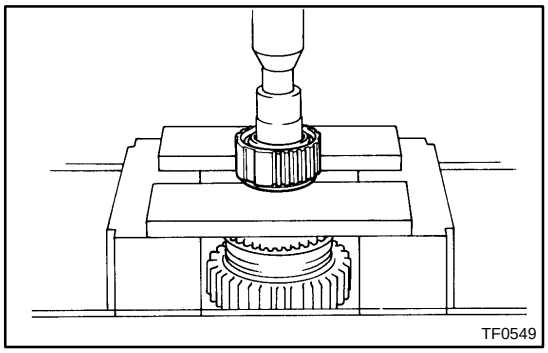
TF0549

3. A/T:
REMOVE HIGH AND LOW CLUTCH SLEEVE ASSEMBLY

(a) Using a snap ring expander, remove the snap ring.
(b) Remove the clutch sleeve.
(c) Using a press, remove the clutch hub.

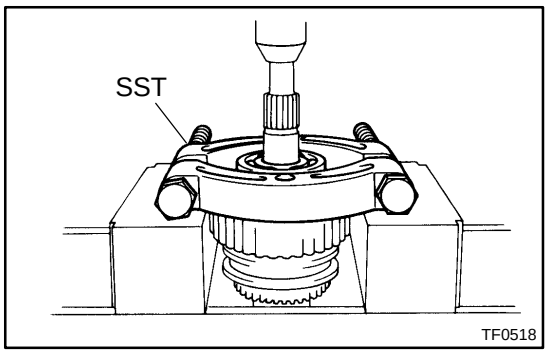

TF0518

4. w/ A.D.D.:
REMOVE BEARING, SPACER AND DRIVE SPROCKET WITH FRONT DRIVE CLUTCH SLEEVE ASSEMBLY

(a) Using SST and a press, remove the bearing.
SST 09555–55010

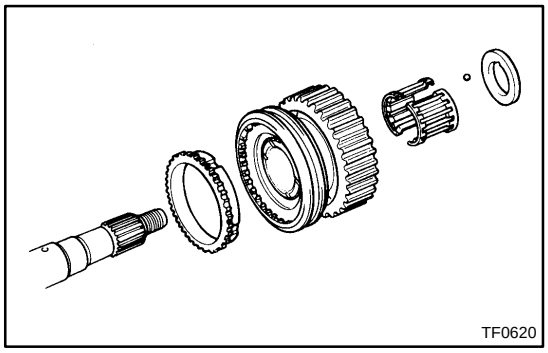
TF0620

(b) w/o One touch 2–4 selector system:
Remove these parts.
- Spacer and ball
- Drive sprocket with front drive clutch sleeve assembly
- Needle roller bearing
- Synchronizer ring

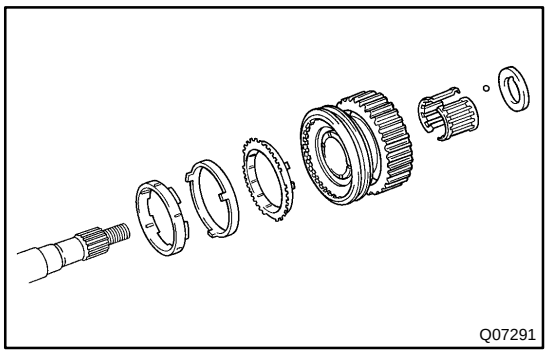

(c) w/ One touch 2–4 selector system:
Remove these parts.
- Spacer and ball
- Drive sprocket with front drive clutch sleeve assembly
- Needle roller bearing
- Synchronizer outer ring, center ring and inner ring

(d) Remove the front drive clutch sleeve assembly from the drive sprocket.

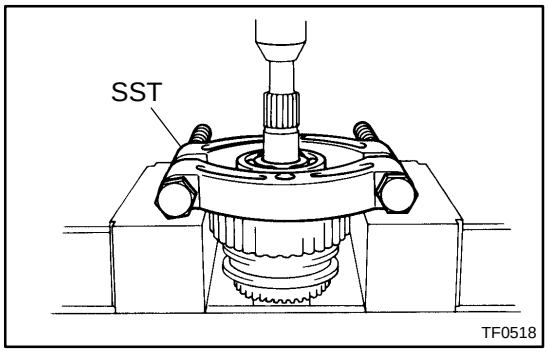

5. w/o A.D.D.:
REMOVE BEARING, SPACER AND DRIVE SPROCKET WITH FRONT DRIVE CLUTCH SLEEVE

(a) Using SST and a press, remove the bearing.
SST 09555–55010

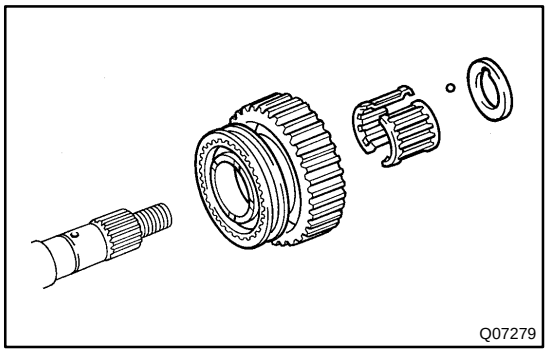

(b) Remove these parts.
- Spacer and ball
- Drive sprocket with front drive clutch sleeve
- Needle roller bearing

(c) Remove the front drive clutch sleeve from the drive sprocket.

6. w/ A.D.D.:
REMOVE 3 SHIFTING KEYS AND 2 KEY SPRINGS FROM FRONT DRIVE CLUTCH SLEEVE

TR019–01

INSPECTION

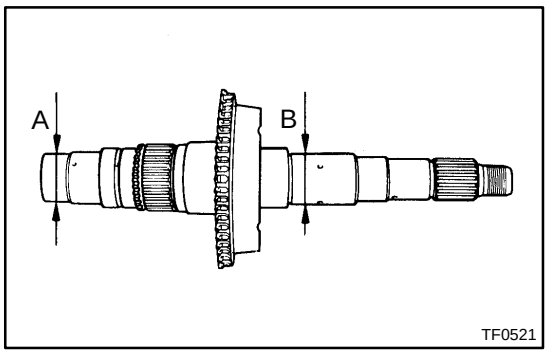

1. INSPECT REAR OUTPUT SHAFT

Using a micrometer, measure the outer diameter of the rear output shaft journal surface.

Minimum diameter:
Part A: 27.98 mm (1.1016 in.)
Part B: 36.98 mm (1.4561 in.)

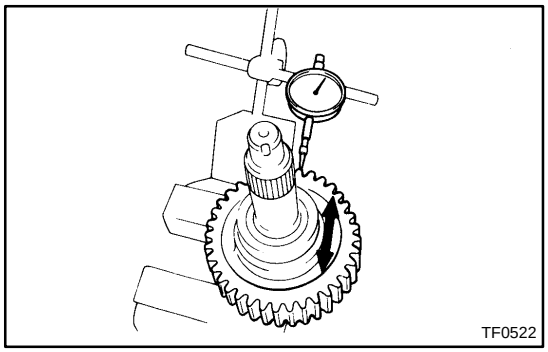

2. INSPECT DRIVE SPROCKET RADIAL CLEARANCE

Using a dial indicator, measure the radial clearance between the sprocket and shaft with the needle roller bearing installed.

Standard clearance:
0.010 – 0.055 mm (0.0004 – 0.0022 in.)
Maximum clearance: 0.055 mm (0.0022 in.)

If the clearance exceeds the maximum, replace the drive sprocket, rear output shaft or needle roller bearing.

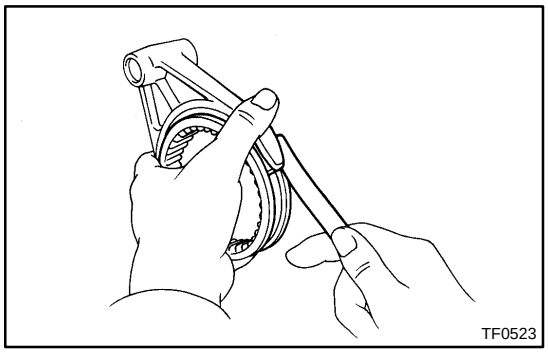

3. INSPECT FRONT DRIVE SHIFT FORK AND CLUTCH SLEEVE CLEARANCE

Using a feeler gauge, measure the clearance between the front drive shift fork and clutch sleeve.

Maximum clearance: 1.0 mm (0.039 in.)

If the clearance exceeds the maximum, replace the shift fork or clutch sleeve.

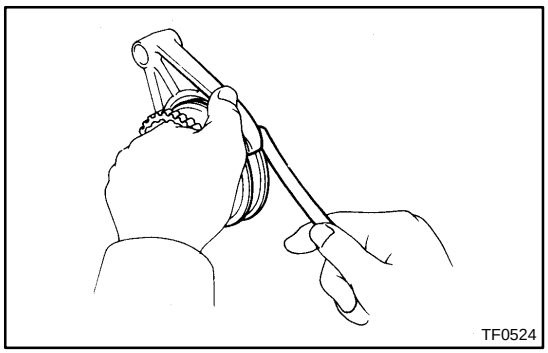

4. INSPECT HIGH AND LOW SHIFT FORK AND CLUTCH SLEEVE CLEARANCE

Using a feeler gauge, measure the clearance between the high and low shift fork and clutch sleeve.

Maximum clearance: 1.0 mm (0.039 in.)

If the clearance exceeds the maximum, replace the shift fork or clutch sleeve.

TR01A–01

REASSEMBLY

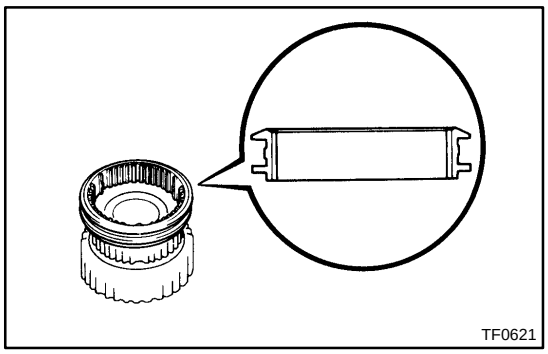

1. w/ A.D.D.:

INSTALL FRONT DRIVE CLUTCH SLEEVE ONTO DRIVE SPROCKET

(a) Install the front drive clutch sleeve onto the drive sprocket.

HINT:

Make sure to install the clutch sleeve in the correct direction.

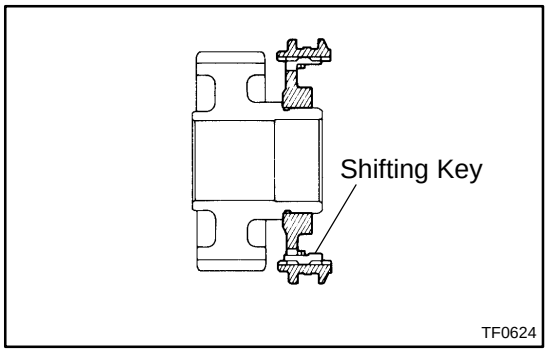

(b) Install the 3 shifting keys and 2 springs.

NOTICE:

Install the key springs positioned so that their end gaps are not in line.

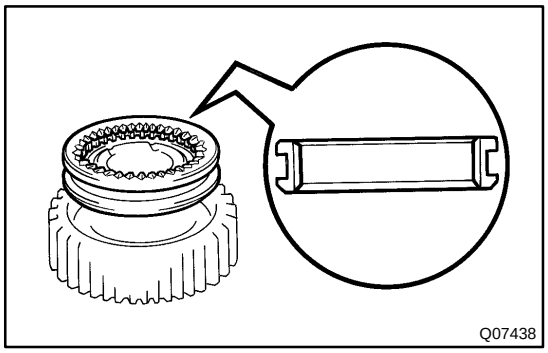

2. w/o A.D.D.:

INSTALL FRONT DRIVE CLUTCH SLEEVE ONTO DRIVE SPROCKET

Install the front drive clutch sleeve onto the drive sprocket.

HINT:

Make sure to install the clutch sleeve in the correct direction.

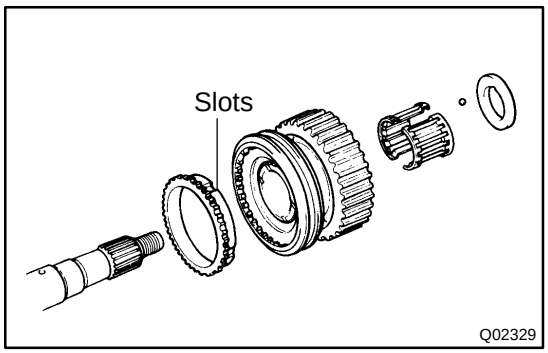

3. w/ A.D.D.:

INSTALL DRIVE SPROCKET WITH FRONT DRIVE CLUTCH SLEEVE ASSEMBLY, SPACER AND BEARING

(a) w/o One touch 2–4 selector system:

Install these parts.

(1) Apply gear oil to the shaft and needle roller bearing.

(2) Place the synchronizer ring on the spline and align the ring slots with the shifting keys.

(3) Install the needle roller bearing in the drive sprocket.

(4) Install the drive sprocket with the front drive clutch sleeve assembly.

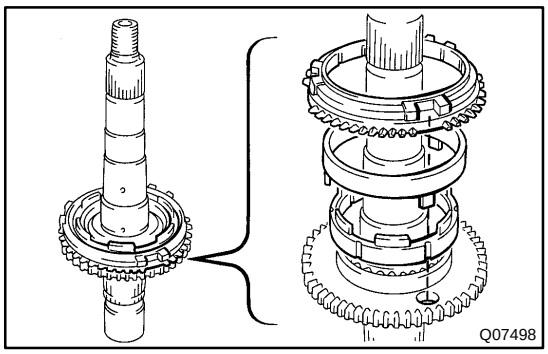

(b) w/ One touch 2–4 selector system:
Install these parts.
(1) Apply gear oil to the shaft and needle roller bearing.
(2) Install the synchronizer inner ring, center ring and outer ring.

NOTICE:
Align the slots of outer and inner rings.

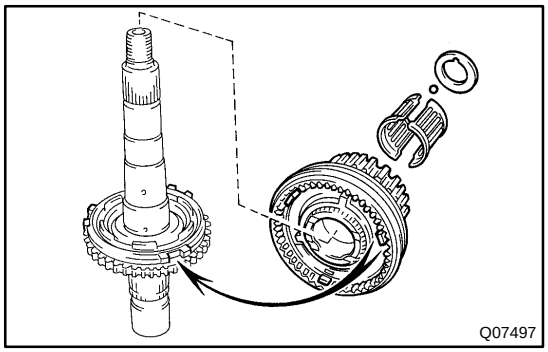

(3) Install the needle roller bearing in the drive sprocket.
(4) Install the drive sprocket with the front drive clutch sleeve assembly.

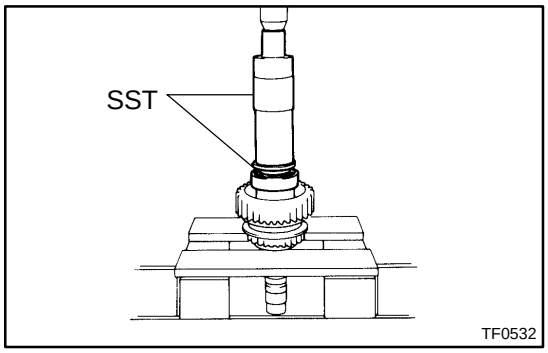

(5) Place the synchronizer ring on the gear and align the ring slots with the shifting keys.
(6) Install the spacer to align it with the ball.
(7) Using SST and a press, install a new bearing with the outer race snap ring groove toward the rear.
SST 09316–60011 (09316–00011, 09316–00071)

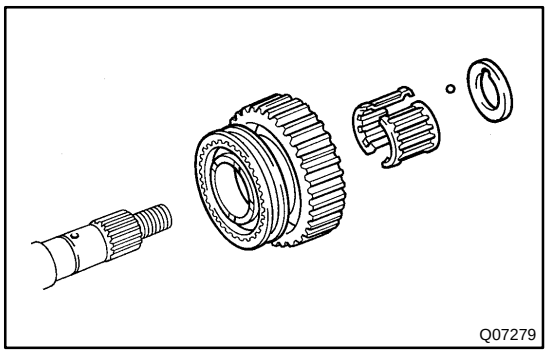

4. w/o A.D.D.:
INSTALL DRIVE SPROCKET WITH FRONT DRIVE CLUTCH SLEEVE, SPACER AND BEARING
(a) Apply gear oil to the shaft and needle roller bearing.
(b) Install the needle roller bearing in the drive sprocket.
(c) Install the drive sprocket with the front drive clutch sleeve assembly.

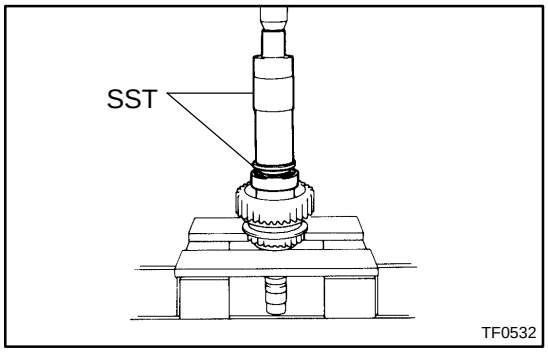

(d) Install the spacer to align it with the ball.
(e) Using SST and a press, install a new bearing with the outer race snap ring groove toward the rear.
SST 09316–60011 (09316–00011,09316–00071)

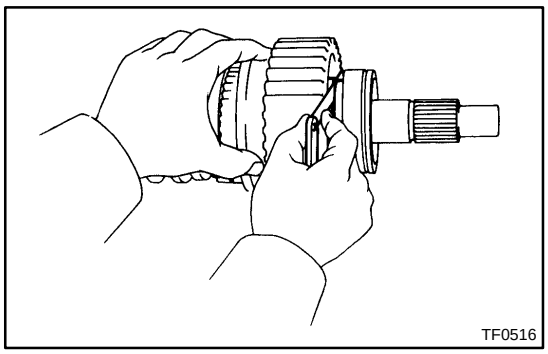

5. INSPECT DRIVE SPROCKET THRUST CLEARANCE

Using a feeler gauge, measure the drive sprocket thrust clearance.

Standard clearance:
0.10 – 0.25 mm (0.0039 – 0.0098 in.)

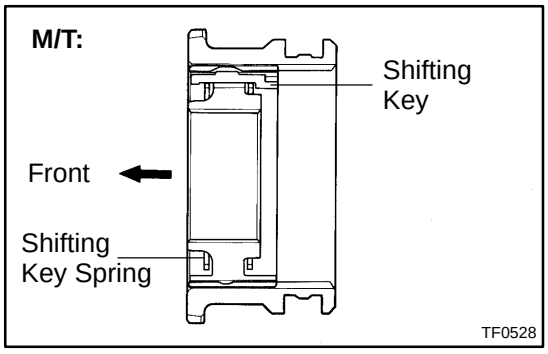

6. M/T:
INSERT HIGH AND LOW CLUTCH HUB ONTO CLUTCH SLEEVE

(a) Install the clutch hub and 3 shifting keys onto the clutch sleeve.

(b) Install the 2 shifting key springs under the shifting keys.

NOTICE:
Install the key springs positioned so that their end gaps are not in line.

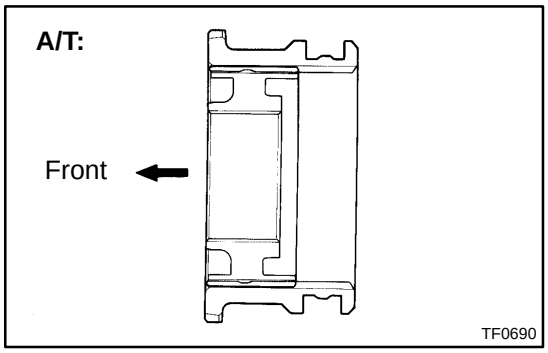

7. A/T:
INSERT HIGH AND LOW CLUTCH HUB ONTO CLUTCH SLEEVE

Install the clutch hub onto the clutch sleeve.

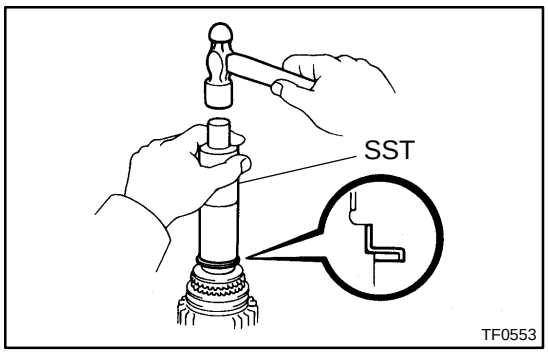

8. M/T:
INSTALL HIGH AND LOW CLUTCH HUB ASSEMBLY

(a) Using SST and a hammer, drive in a new key retainer.
SST 09316–60011 (09316–00011)

NOTICE:
Be careful not to deform or damage the key retainer.

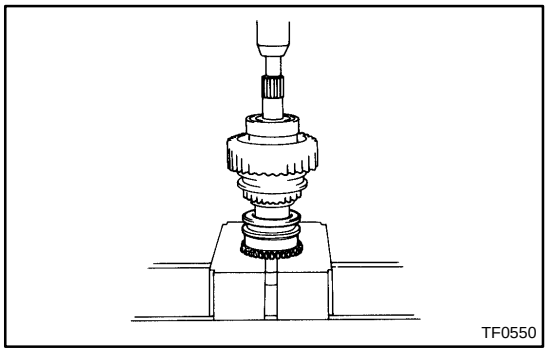

(b) Using a press, install the high and low clutch hub assembly.

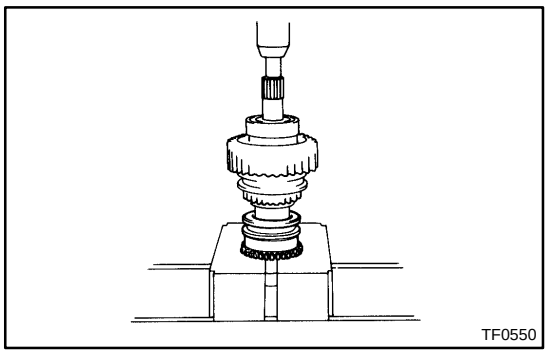
TF0550

9. A/T:
INSTALL HIGH AND LOW CLUTCH HUB ASSEMBLY

Using a press, install the high and low clutch hub assembly.

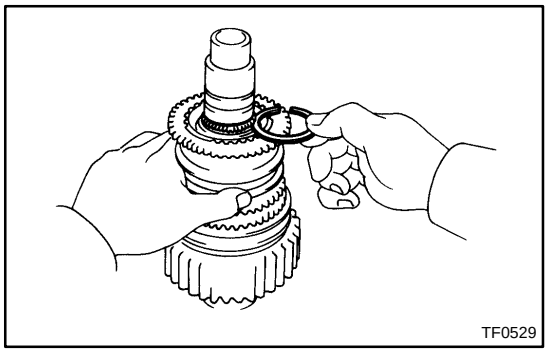
TF0529

10. INSTALL SNAP RING

Select a snap ring that will allow minimum axial play and install it to the shaft.

Mark	Thickness mm (in.)
A	2.10 – 2.15 (0.0827 – 0.0846)
B	2.15 – 2.20 (0.0846 – 0.0866)
C	2.20 – 2.25 (0.0866 – 0.0886)
D	2.25 – 2.30 (0.0886 – 0.0906)
E	2.30 – 2.35 (0.0906 – 0.0925)
F	2.35 – 2.40 (0.0925 – 0.0945)
G	2.40 – 2.45 (0.0945 – 0.0965)
H	2.45 – 2.50 (0.0965 – 0.0984)
J	2.50 – 2.55 (0.0984 – 0.1004)
K	2.00 – 2.05 (0.0787 – 0.0807)
L	2.05 – 2.10 (0.0807 – 0.0827)

TRANSFER ASSEMBLY

COMPONENTS

TR010–01

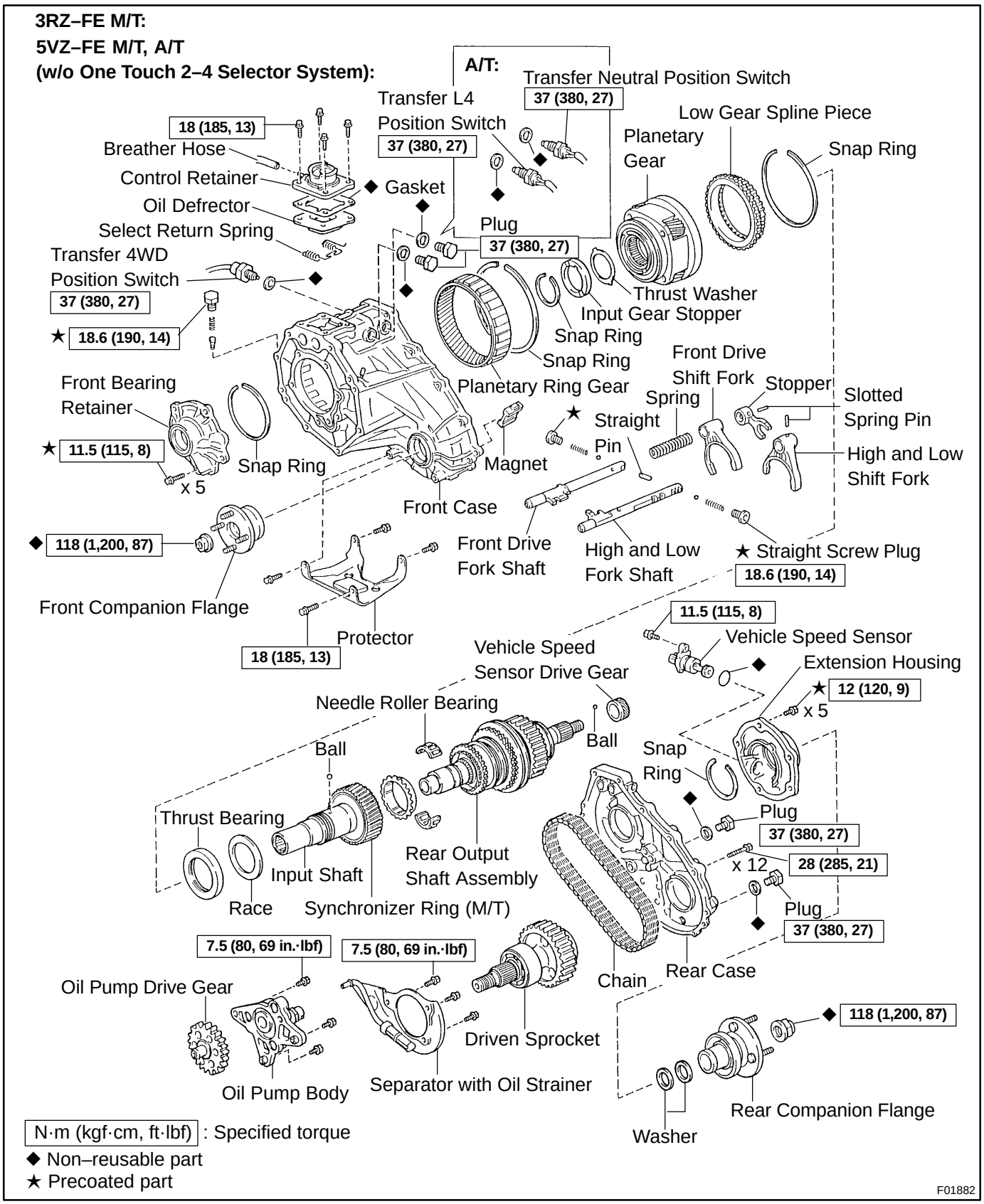

3RZ–FE A/T:

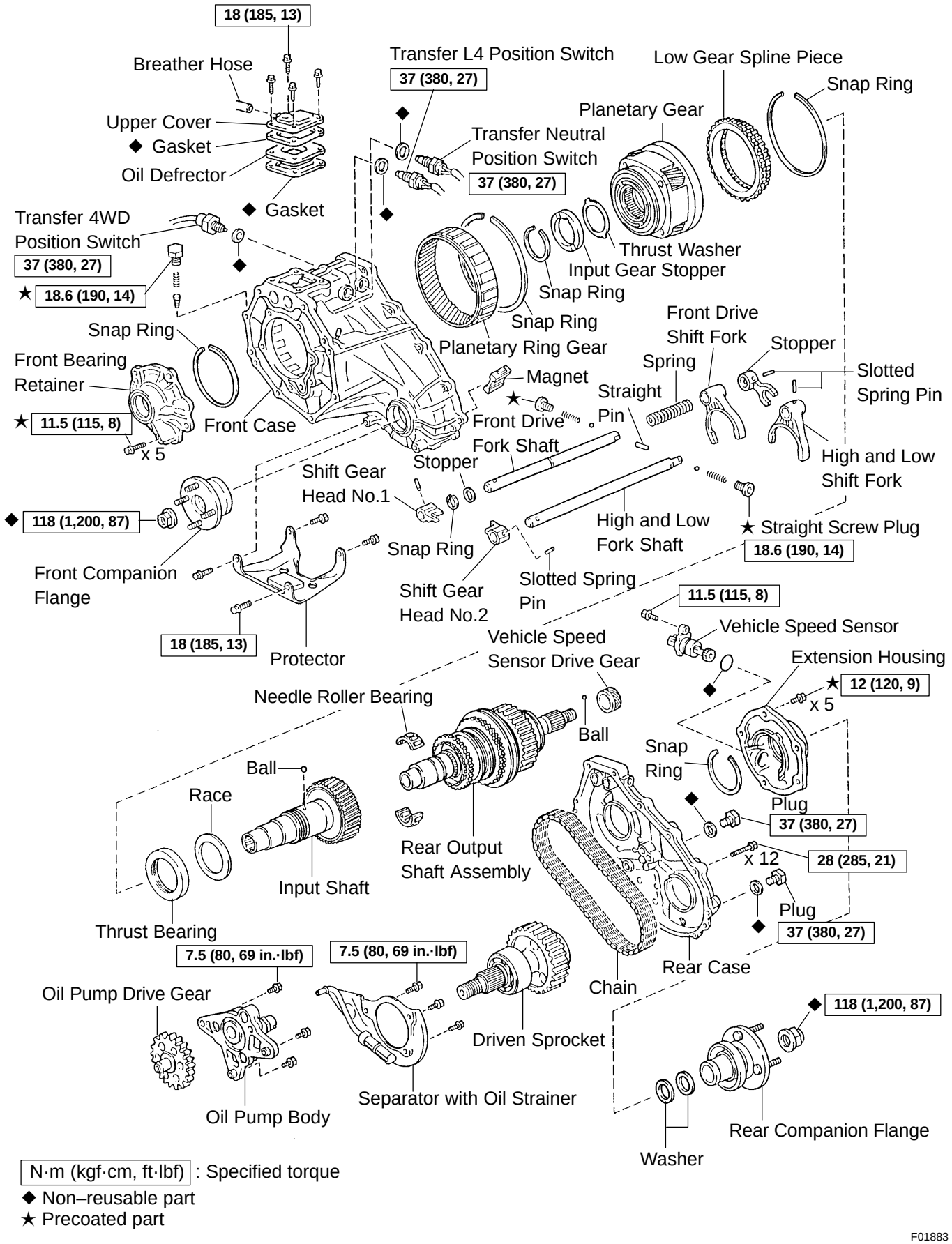

N·m (kgf·cm, ft·lbf) : Specified torque
◆ Non–reusable part
★ Precoated part

F01883

5VZ–FE M/T, A/T
(w/ One Touch 2–4 Selector system):

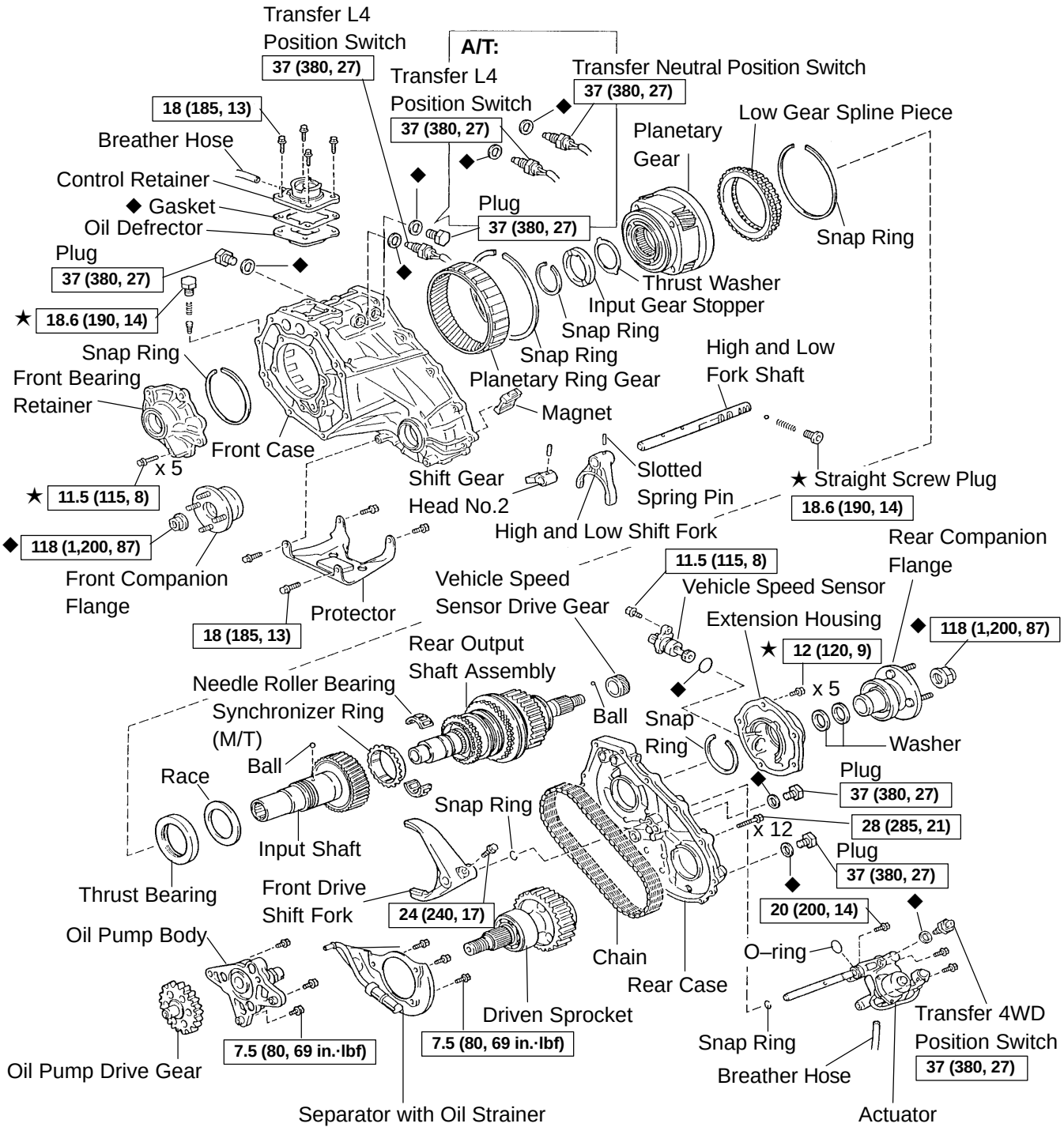

N·m (kgf·cm, ft·lbf) : Specified torque
◆ Non–reusable part
★ Precoated part

F01884

TR0D8–01

DISASSEMBLY

1. REMOVE VEHICLE SPEED SENSOR
Torque: 11.5 N·m (115 kgf·cm, 8 ft·lbf)

2. w/ One touch 2–4 selector system and A/T:
REMOVE L4 POSITION SWITCH
Torque: 37 N·m (380 kgf·cm, 27 ft·lbf)

3. w/o One touch 2–4 selector system:
REMOVE 4WD POSITION SWITCH
Torque: 37 N·m (380 kgf·cm, 27 ft·lbf)

4. A/T:
REMOVE NEUTRAL POSITION SWITCH
Torque: 37 N·m (380 kgf·cm, 27 ft·lbf)

5. REMOVE PLUGS OF FRONT CASE
Torque: 37 N·m (380 kgf·cm, 27 ft·lbf)

HINT:

At the time of installation,check the following items.

- The input shaft and output shafts rotate smoothly.
- Shifting can be made smoothly to all position.

6. REMOVE PROTECTOR

Remove the 4 bolts and protector.

Torque: 18 N·m (185 kgf·cm, 13 ft·lbf)

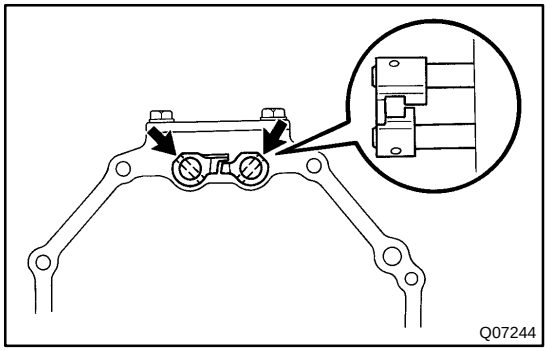
Q07244

7. 3RZ–FE A/T:
REMOVE SHIFT GEAR HEAD NO.1 AND NO.2

(a) Using a pin punch and hammer, drive out the 2 slotted spring pins.

(b) Remove the 2 shift gear heads.

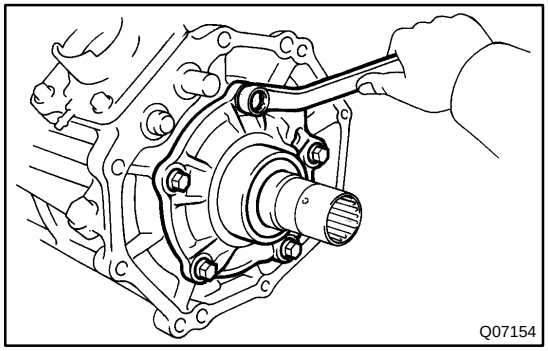
Q07154

8. REMOVE FRONT BEARING RETAINER

(a) Remove the 5 bolts.
Torque: 11.5 N·m (115 kgf·cm, 8 ft·lbf)

HINT:

At the time of installation, apply liquid sealer to the bolts.

Sealant:
Part No.08833–00080, THREE BOND 1344,
LOCTITE 242 or equivalent

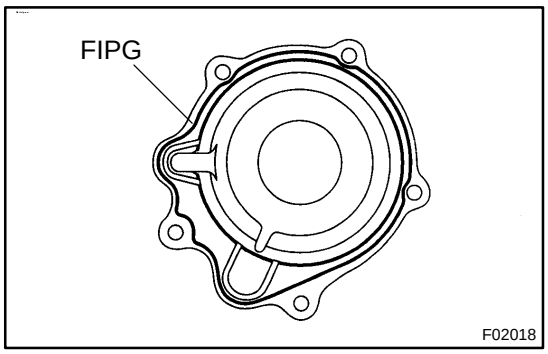

(b) Using a plastic hammer, tap the front bearing retainer and remove it.

HINT:

At the time of installation, please refer to the following items.

- Remove any FIPG material and be careful not to drop oil on the contacting surfaces of the front bearing retainer.
- Apply FIPG to the front bearing retainer, as shown.

FIPG:

Part No. 08826–00090,

THREE BOND 1281 or equivalent

9. 3RZ–FE A/T:

REMOVE UPPER COVER, 2 GASKETS AND OIL DEFLECTOR

Remove the 4 bolts, upper cover, 2 gaskets and oil deflector.

Torque: 18 N·m (185 kgf·cm, 13 ft·lbf)

HINT:

At the time of installation, install a new gasket.

10. Except 3RZ–FE A/T:

REMOVE CONTROL RETAINER, GASKET AND OIL DEFLECTOR

(a) Remove the 4 bolts, control retainer, gasket and oil deflector.

Torque: 18 N·m (185 kgf·cm, 13 ft·lbf)

HINT:

At the time of installation, install a new gasket.

(b) w/o One touch 2–4 selector system:

Remove the select return spring from the control retainer.

11. REMOVE FRONT COMPANION FLANGE

(a) Using a chisel and hammer, loosen the staked part of the nut.

HINT:

At the time of installation, stake a new lock nut.

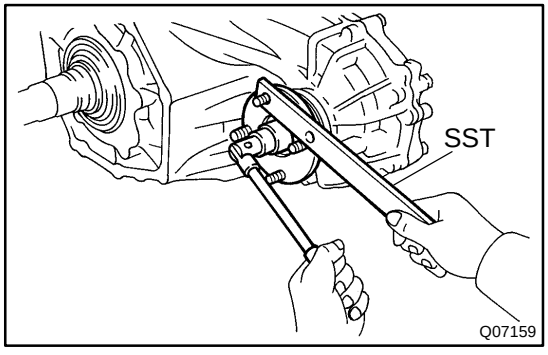

(b) Using SST to hold the flange, remove the companion flange lock nut.

SST 09330–00021

Torque: 118 N·m (1,200 kgf·cm, 87 ft·lbf)

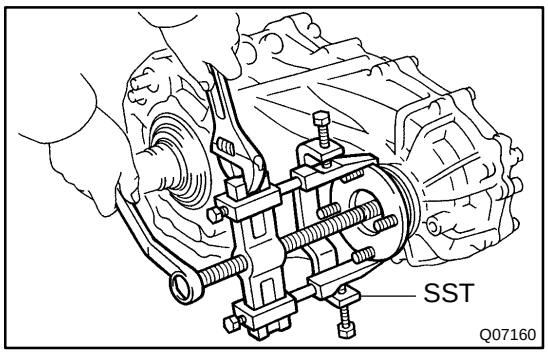

(c) Using SST, remove the companion flange.
SST 09950–40011 (09951–04020, 09952–04010, 09953–04030, 09954–04010, 09955–04051, 09957–04010, 09958–04011)

12. REMOVE REAR COMPANION FLANGE

Remove the rear companion flange in the same way as the front companion flange.

HINT:

At the time of installation, please refer to the following items.

- Front companion flange bolts are slim.
- Rear companion flange bolts are thick.

13. REMOVE EXTENSION HOUSING

(a) Remove the 5 bolts.
Torque: 12 N·m (120 kgf·cm, 9 ft·lbf)

HINT:

At the time of installation, apply liquid sealer to the bolts.
Sealant:
Part No.08833–00080, THREE BOND 1344,
LOCTITE 242 or equivalent

(b) Using a plastic hammer, tap the extension housing and remove it.

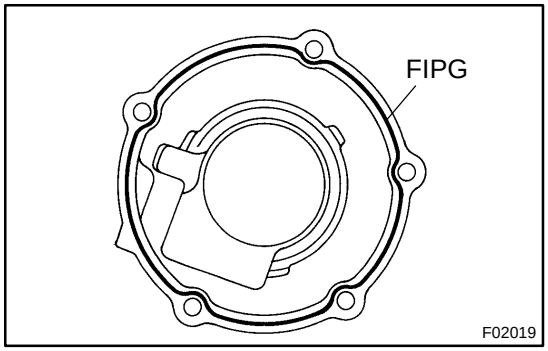

HINT:

At the time of installation, please refer to the following items.

- Remove any FIPG material and be careful not to drop oil on the contacting surfaces of the extension housing.
- Apply FIPG to the extension housing, as shown.
FIPG:
Part No.08826–00090,
THREE BOND 1281 or equivalent

14. REMOVE VEHICLE SPEED SENSOR DRIVE GEAR

(a) Remove the vehicle speed sensor drive gear.

HINT:

At the time of installation, please refer to the following item.
Make sure to install the drive gear in the correct direction.

(b) Using a magnetic finger, remove the ball from the rear output shaft.

15. SEPARATE FRONT CASE AND REAR CASE

(a) Remove the 12 bolts.
Torque: 28 N·m (285 kgf·cm, 21 ft·lbf)

(b) Using a screwdriver, separate the front case and rear case.

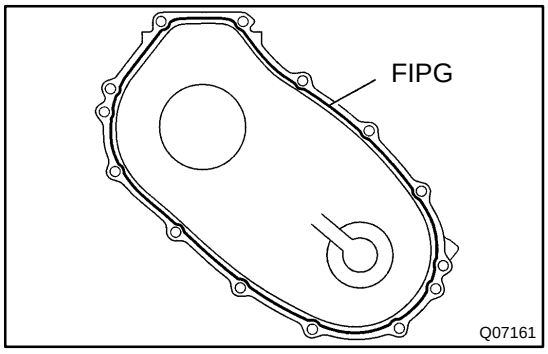

HINT:
At the time of installation, please refer to the following items.

- Shift the high and low sleeve to low side (rear side) and assemble the front case and rear case.
- Remove any FIPG material and be careful not to drop oil on the contacting surfaces of the rear case.
- Apply FIPG to the rear case, as shown.
  FIPG:
  Part No.08826–00090,
  THREE BOND 1281 or equivalent

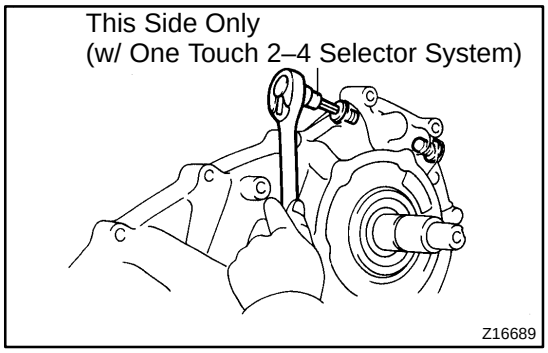

16. REMOVE STRAIGHT SCREW PLUG, SPRING AND LOCKING BALL

(a) Using a hexagon wrench, remove the 1 or 2 screws.
Torque: 18.6 N·m (190 kgf·cm, 14 ft·lbf)

HINT:
At the time of installation, apply liquid sealer to the plugs.
Sealant:
Part No.08833–00080, THREE BOND 1344,
LOCTITE 242 or equivalent

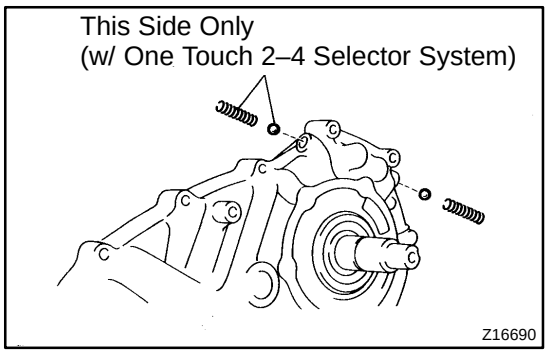

(b) Using a magnetic finger, remove the 1 or 2 springs and balls from the both hole.

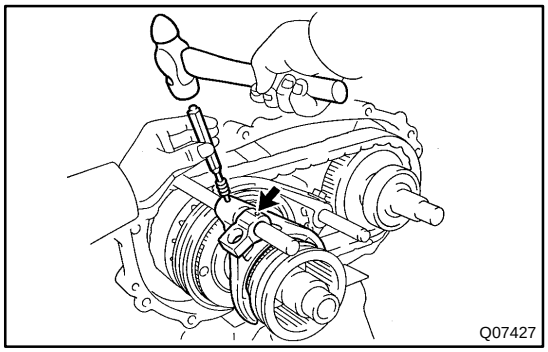

17. w/ One touch 2–4 selector system:
REMOVE HIGH AND LOW FORK SHAFT, SHIFT FORK AND SHIFT HEAD NO.2

(a) Mount the rear case in a vise.

NOTICE:
Be careful not to damage the sealing surface.

(b) Using a pin punch and hammer, drive out the 2 slotted spring pins.

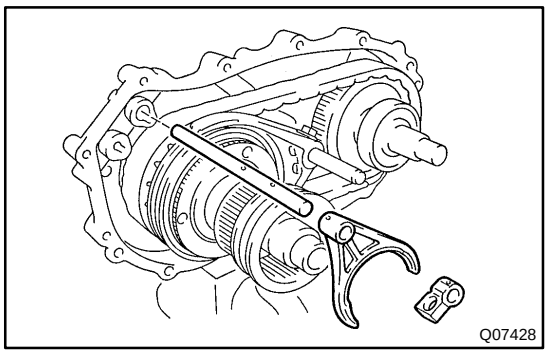
Q07428

(c) Remove high and low fork shaft, shift fork and shift gear head No.2.

HINT:

At the time of installation, please refer to the following items.

- Place the high and low shift fork into the groove of the clutch sleeve.
- Make sure to install the shift fork and shift gear head No.2 in the correct direction.

3RZ–FE A/T:

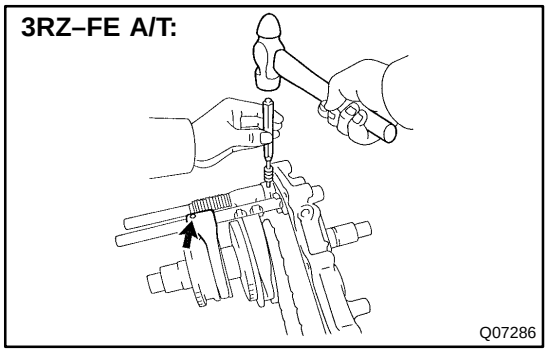
Q07286

18. w/o One touch 2–4 selector system:
REMOVE FRONT DRIVE FORK SHAFT, SHIFT FORK, SPRING AND STOPPER

(a) Mount the rear case in a vise.

NOTICE:

Be careful not to damage the sealing surface.

(b) Using a pin punch and hammer, drive out the 2 slotted spring pins.

HINT:

When the pin is removed from the front drive fork shaft, the shaft will spring loose if the pin punch is removed, so keep the pin punch inserted in the shaft hole.

Except 3RZ–FE A/T:

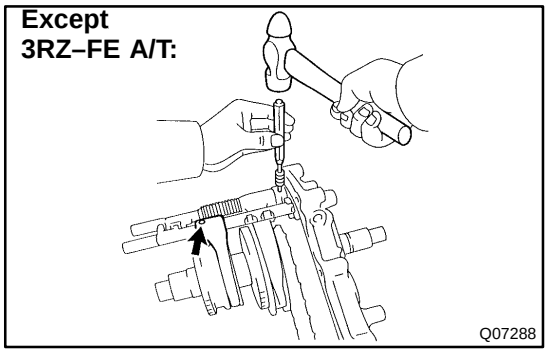
Q07288

3RZ–FE A/T:

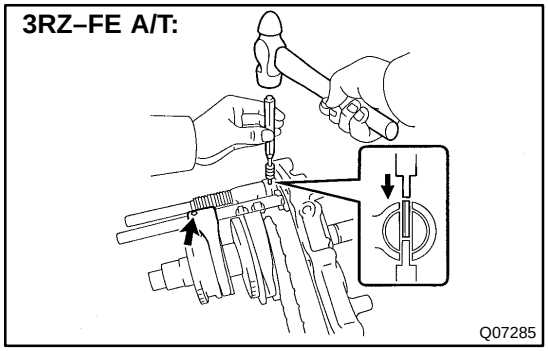
Q07285

HINT:

At the time of installation, please refer to the following items.

- Use a pin punch and hammer, drive in the 2 slotted spring pins.
- When installing the pin in the front drive fork shaft, push the shaft towards the rear case and install the pin while the spring is compressed.

Except 3RZ–FE A/T:

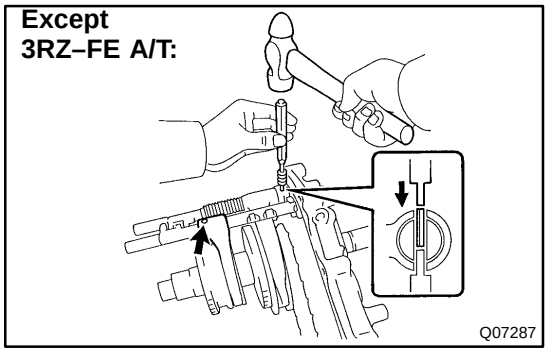
Q07287

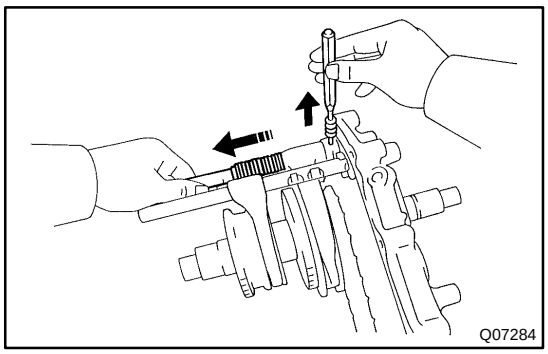

(c) Hold the front drive fork shaft in place by hand, when removing the pin punch.

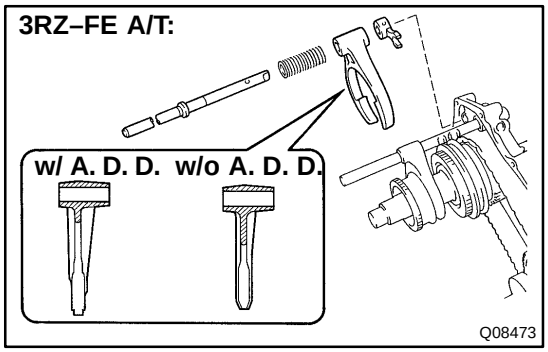

(d) Remove the front drive fork shaft, shift fork, spring and stopper.

HINT:

At the time of installation, please refer to the following items.

- Place the front drive shift fork into the groove of the clutch sleeve.
- Make sure to install the shift fork and stopper in the correct direction.

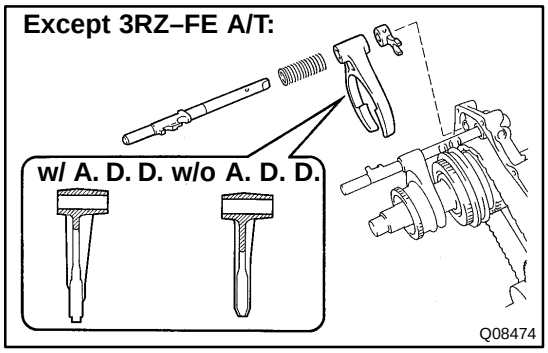

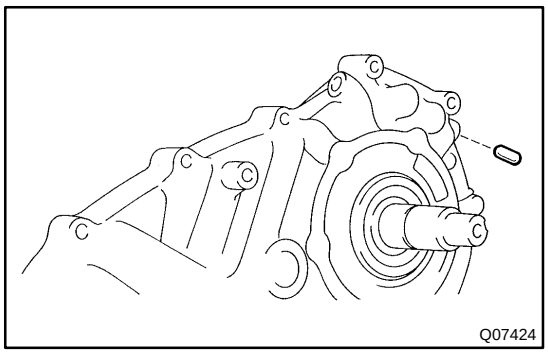

(e) w/o One touch 2–4 selector system:
Using a magnetic finger, remove the straight pin.

HINT:

At the time of installation, please refer to the following item.

Apply gear oil to the straight pin and insert it into the case hole.

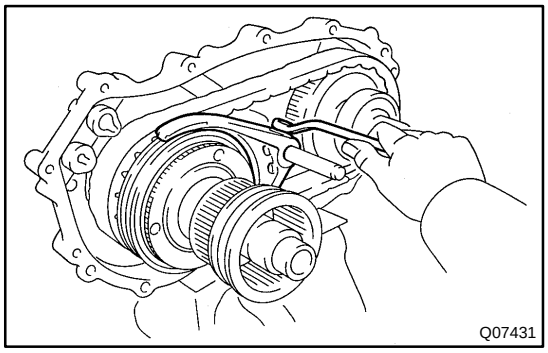

19. w/ One touch 2–4 selector system:
REMOVE REAR OUTPUT SHAFT, DRIVEN SPROCKET, CHAIN AND FRONT DRIVE SHIFT FORK

(a) Remove the shift fork bolt.
Torque: 24 N·m (240 kgf·cm, 17 ft·lbf)

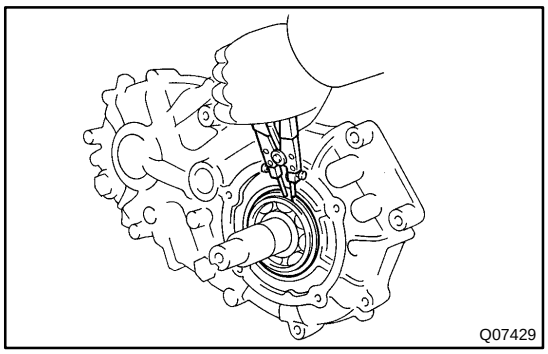

(b) Using a snap ring expander, remove the snap ring.

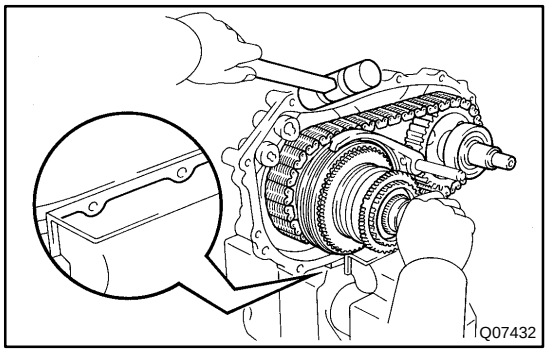

(c) Using a plastic hammer, tap the rear case with pulling the rear output shaft, driven sprocket and front drive shift fork.

HINT:

At the time of installation, please refer to the following items.

- Place the front drive shift fork into the groove of the clutch sleeve.
- Make sure to install the shift fork in the correct direction.
- If necessary, heat the rear case to about 50 – 80˚C (122 – 176˚F).

(d) Remove the chain.

20. w/o One touch 2–4 selector system:
REMOVE HIGH AND LOW FORK SHAFT AND SHIFT FORK

3RZ–FE A/T:

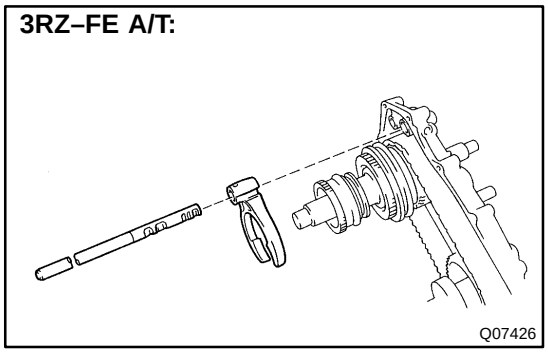

HINT:

At the time of installation, please refer to the following items.

- Place the high and low shift fork into the groove of the clutch sleeve.
- Make sure to install the shift fork in the correct direction.

Except 3RZ–FE A/T:

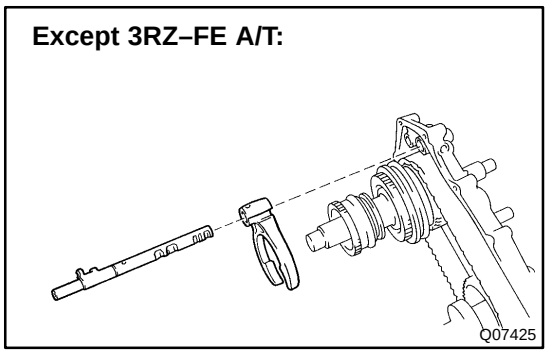

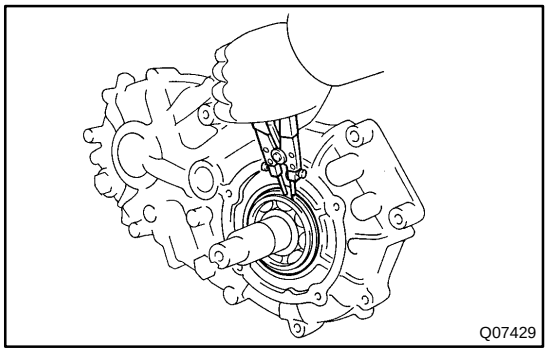

21. REMOVE REAR OUTPUT SHAFT, DRIVEN SPROCKET AND CHAIN

(a) Using a snap ring expander, remove the snap ring.

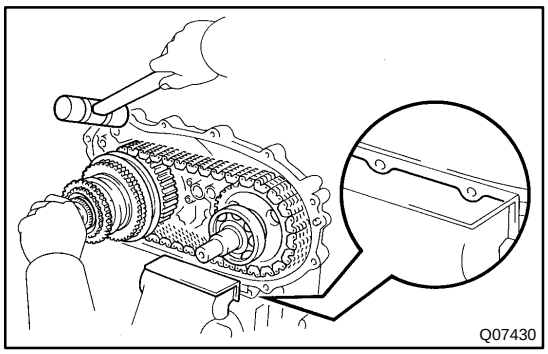

(b) Using a plastic hammer, tap the rear case with pulling the rear output shaft and driven sprocket.

HINT:

At the time of installation, please refer to the following item.

If necessary, heat the rear case to about 50 – 80˚C (122 – 176˚F).

(c) Remove the chain.

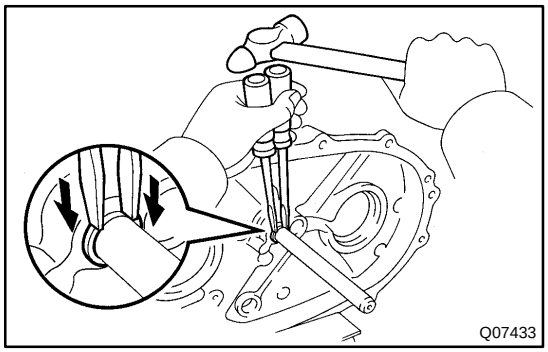

22. w/ One touch 2–4 selector system:
REMOVE ACTUATOR ASSEMBLY

(a) Using 2 screwdrivers and a hammer, remove the snap ring.

(b) Remove the 3 bolts and the actuator assembly.
Torque: 20 N·m (200 kgf·cm, 14 ft·lbf)

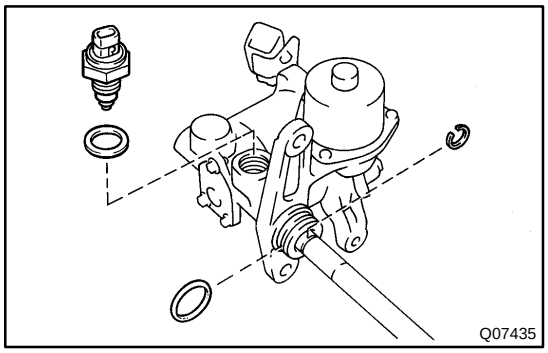

(c) Remove the O–ring, 4WD position switch and snap ring from the actuator assembly.
Torque: 37 N·m (380 kgf·cm, 27 ft·lbf)

HINT:

At the time of installation, please refer to the following item.

Coat a new O–ring with gear oil and install it to the actuator assembly.

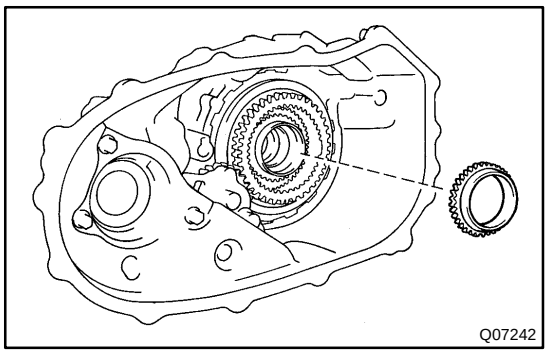

23. M/T:
REMOVE SYNCHRONIZER RING FROM INPUT SHAFT

HINT:

At the time of installation, please refer to the following items.

- Apply MP grease to the synchronizer ring.
- Align the synchronizer ring slots with the shifting keys, and install it on the high and low clutch hub.

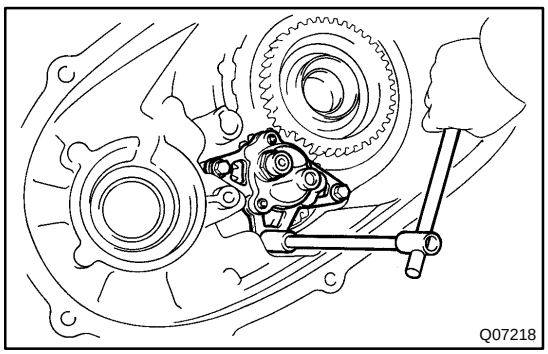

24. REMOVE SEPARATOR WITH OIL STRAINER AND MAGNET

Remove the 3 bolts and the separator with the oil strainer and magnet.
Torque: 7.5 N·m (80 kgf·cm, 69 in.lbf)

25. REMOVE OIL PUMP BODY ASSEMBLY

Remove the 3 bolts and the oil pump body assembly.
Torque: 7.5 N·m (80 kgf·cm, 69 in.lbf)

26. REMOVE OIL PUMP DRIVE GEAR

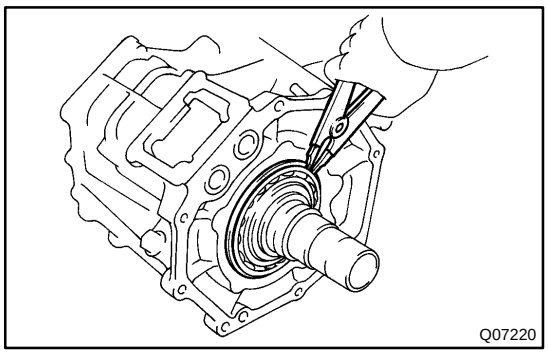

27. REMOVE PLANETARY GEAR ASSEMBLY WITH INPUT SHAFT

(a) Using a snap ring expander, remove the snap ring.

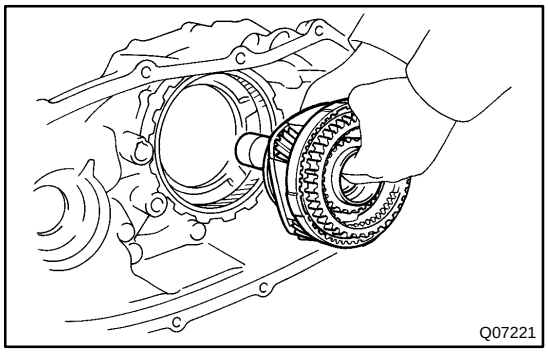

(b) Pull out the planetary gear assembly with the input shaft.

HINT:

At the time of installation, please refer to the following item.

If necessary, heat the front case to about 50 – 80˚C (122 – 176˚F).

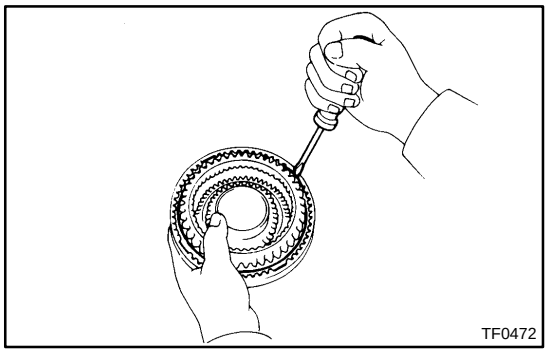

28. REMOVE LOW GEAR SPLINE PIECE

(a) Using a screwdriver, remove the snap ring.

HINT:

At the time of installation, please refer to the following item.

Be sure the end gap of the snap ring is not aligned with cutout portion of the planetary carrier.

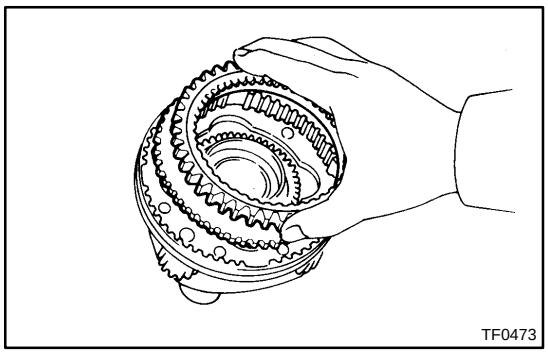

(b) Remove the low gear spline piece.

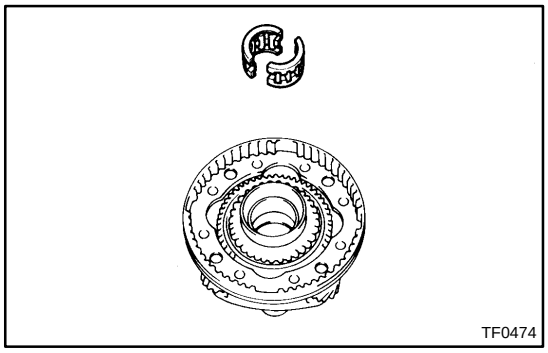

29. REMOVE NEEDLE ROLLER BEARING FROM INPUT SHAFT

HINT:

At the time of installation, apply gear oil to the needle roller bearing.

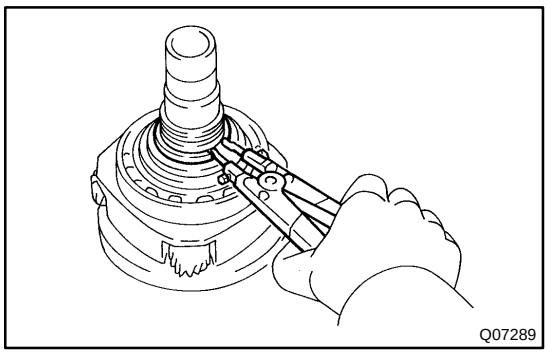
Q07289

30. REMOVE INPUT SHAFT STOPPER AND THRUST BEARING

(a) Using a snap ring expander, remove the snap ring.

HINT:

At the time of installation, please refer to the following item.

Select a snap ring that will allow 0.05 – 0.15 mm (0.0020 – 0.0059 in.) axial play.

Mark	Thickness mm (in.)
A	2.10 – 2.15 (0.0827 – 0.0846)
B	2.15 – 2.20 (0.0846 – 0.0866)
C	2.20 – 2.25 (0.0866 – 0.0886)
D	2.25 – 2.30 (0.0886 – 0.0906)
E	2.30 – 2.35 (0.0906 – 0.0925)
F	2.35 – 2.40 (0.0925 – 0.0945)
G	2.40 – 2.45 (0.0945 – 0.0965)
H	2.45 – 2.50 (0.0965 – 0.0984)
J	2.50 – 2.55 (0.0984 – 0.1004)
K	2.55 – 2.60 (0.1004 – 0.1024)
L	2.60 – 2.65 (0.1024 – 0.1043)
M	2.65 – 2.70 (0.1043 – 0.1063)
N	2.70 – 2.75 (0.1063 – 0.1083)
P	2.75 – 2.80 (0.1083 – 0.1102)
Q	2.80 – 2.85 (0.1102 – 0.1122)
R	2.85 – 2.90 (0.1122 – 0.1142)
S	2.90 – 2.95 (0.1142 – 0.1161)
T	2.95 – 3.00 (0.1161 – 0.1181)
U	3.00 – 3.05 (0.1181 – 0.1201)

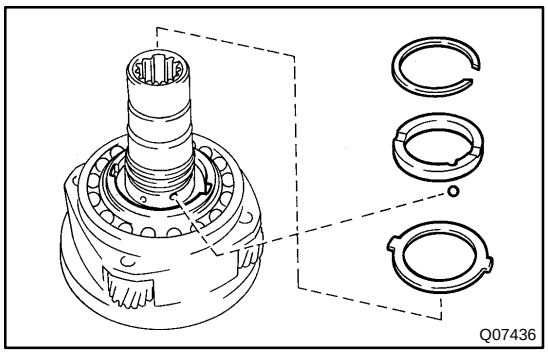
Q07436

(b) Remove the input gear stopper, thrust washer and ball.

HINT:

At the time of installation, apply gear oil to the input gear stopper and thrust washer.

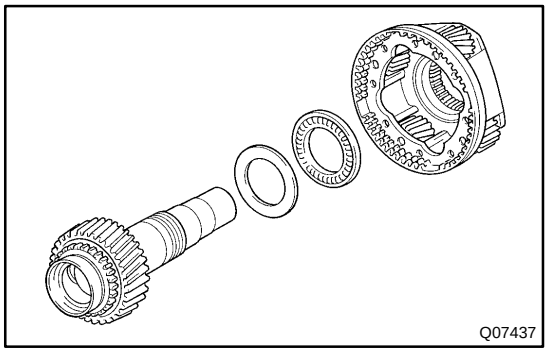
Q07437

31. REMOVE INPUT SHAFT, THRUST NEEDLE ROLLER BEARING AND THRUST RACE

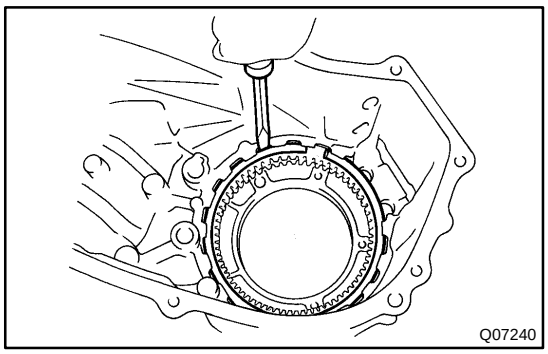

32. REMOVE PLANETARY RING GEAR

(a) Using a screwdriver, remove the snap ring.

HINT:

At the time of installation, please refer to the following item.

Be sure the end gap of the snap ring is not aligned with the upper side of the case.

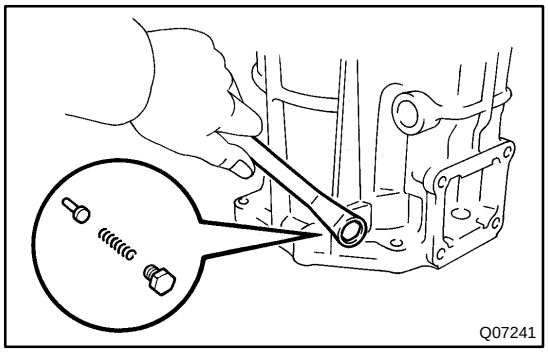

(b) Remove the plug, spring and pin.

Torque: 18.6 N·m (190 kgf·cm, 14 ft·lbf)

HINT:

At the time of installation, apply liquid sealer to the plug.

Sealant:
Part No.08833–00080, THREE BOND 1344,
LOCTITE 242 or equivalent

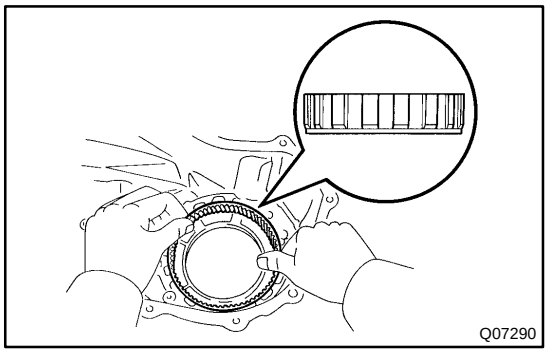

(c) Remove the planetary ring gear.

HINT:

At the time of installation, please refer to the following item.

Make sure to install the ring gear in the correct direction.

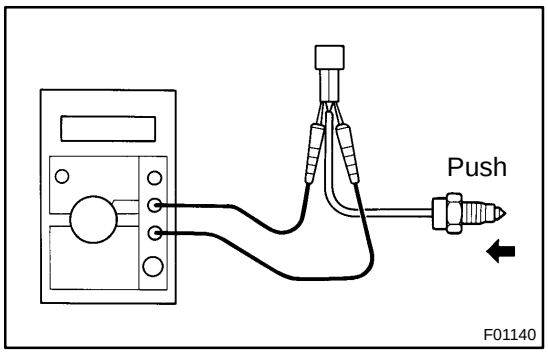

33. INSPECT SWITCHES

Check that there is continuity between terminals as shown.

Switch Position	Specified Condition
Push	Continuity
Free	No continuity

If operation is not as specified, replace the switch.

TR012–01

REASSEMBLY

Reassembly is in the reverse order of disassembly (See page TR–13).

HINT:

Coat all of the sliding and rotating surfaces with gear oil before assembly.

TRANSFER SYSTEM

TR00V–01

PRECAUTION

When working with FIPG material, you must observe the following.

- **Using a razor blade and gasket scraper, remove all the old packing (FIPG) material from the gasket surfaces.**
- **Thoroughly clean all components to remove all the loose material.**
- **Clean both sealing surfaces with a non–residue solvent.**
- **Apply FIPG in approx. 1 mm (0.04 in.) wide bead along the sealing surface.**
- **Parts must be assembled within 10 minutes of application. Otherwise, the packing (FIPG) material must be removed and reapplied.**

TRANSFER UNIT

COMPONENTS

TR00X–01

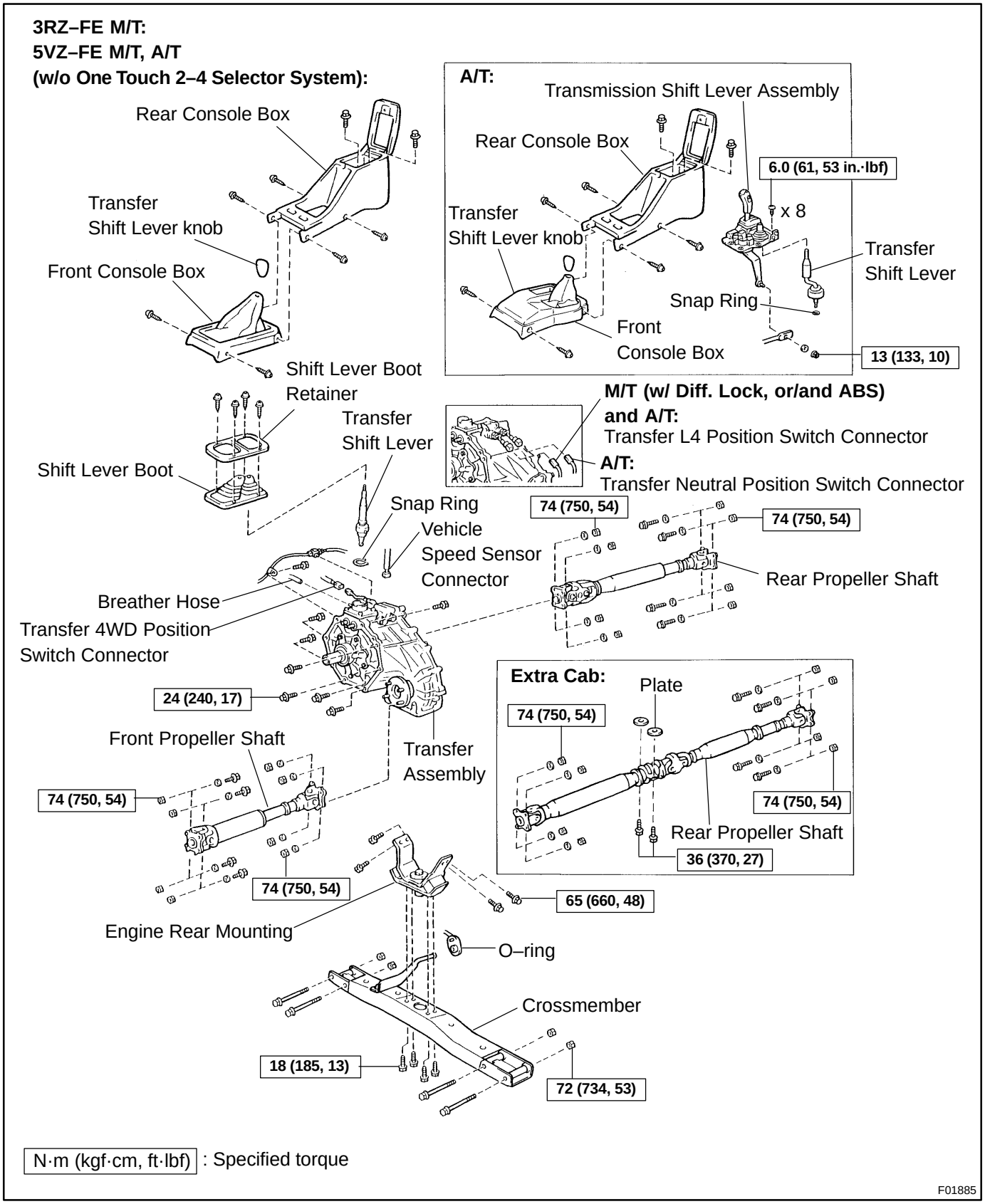

3RZ–FE A/T:

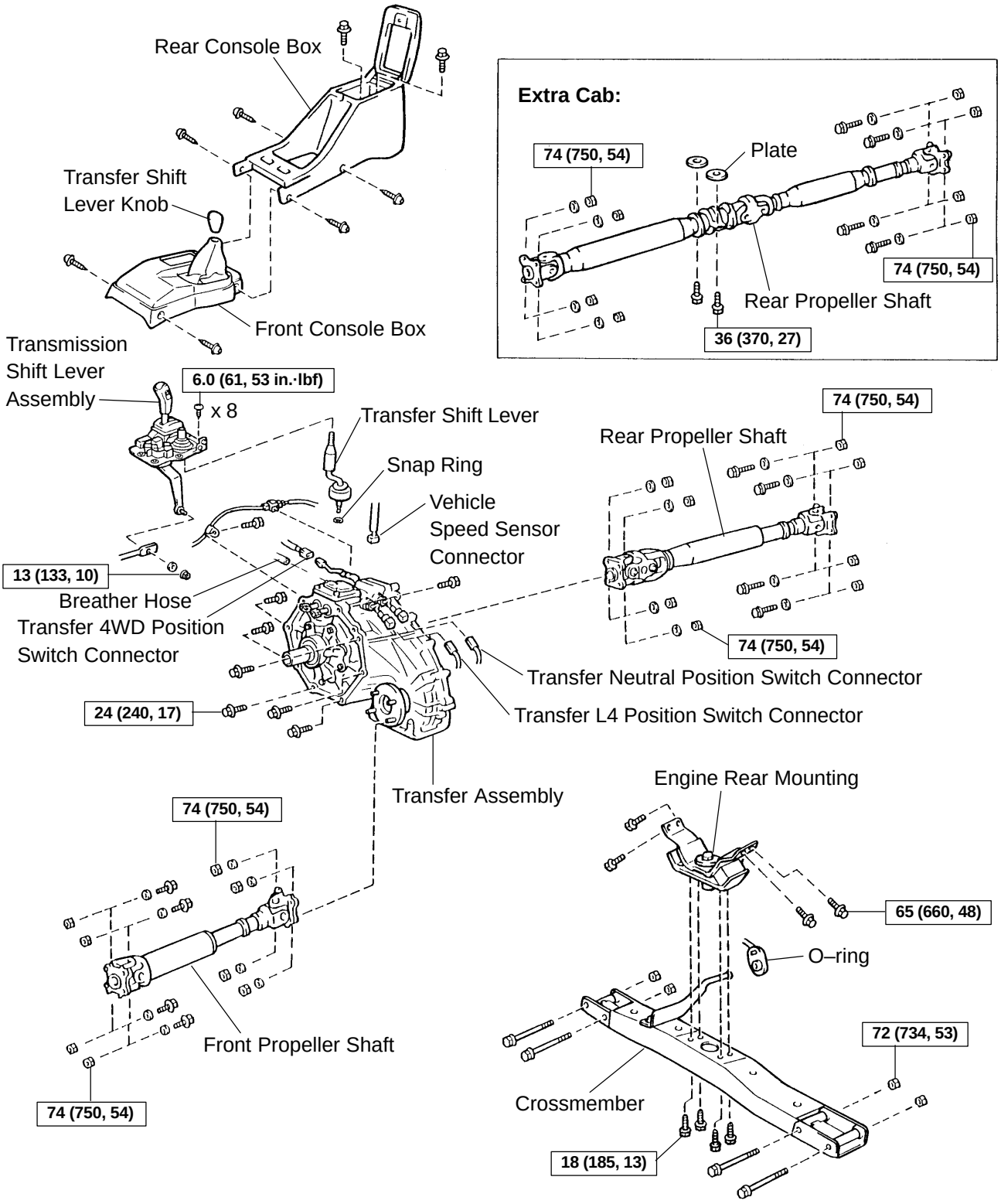

N·m (kgf·cm, ft·lbf) : Specified torque

F01886

5VZ–FE M/T, A/T
(w/ One Touch 2–4 Selector System):

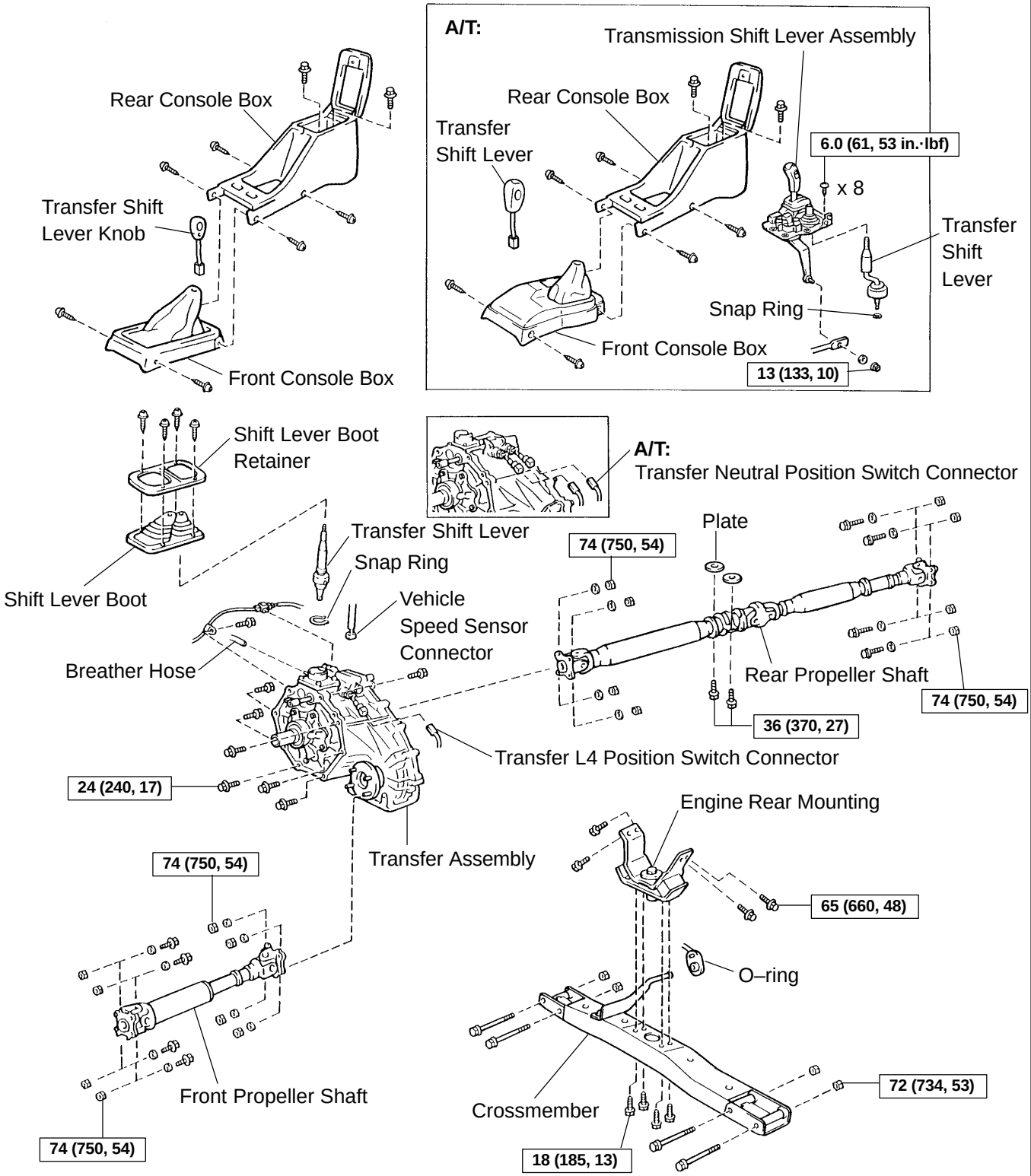

N·m (kgf·cm, ft·lbf) : Specified torque

F01887

TR00Z–01

INSTALLATION

Installation is in the reverse order of removal (See page TR–6).

1. APPLY MP GREASE TO TRANSFER ADAPTOR OIL SEAL

2. AFTER INSTALLATION, DO ROAD TEST

TR00Y–02

REMOVAL

1. M/T:

REMOVE TRANSFER SHIFT LEVER

(a) Remove the 2 bolts, 4 screws and rear console box.

(b) w/o One touch 2–4 selector system:
Remove the 2 screws, transmission shift lever knob, transfer shift lever knob and front console box.

(c) w/ One touch 2–4 selector system:
Remove the 2 screws, transmission shift lever knob, transfer shift lever knob and front console box, and disconnect the 2–4 selector connector.

(d) Remove the 4 screws, shift lever boot and retainer.

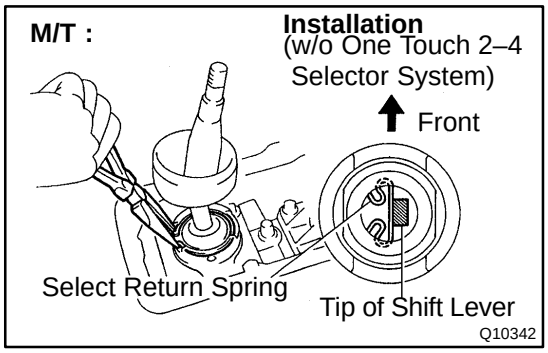

(e) Using pliers, remove the snap ring and pull out the transfer shift lever.

HINT:

- w/o One touch 2–4 selector system:
  Shift the transfer shift lever to the H4 position.
- w/ One touch 2–4 selector system:
  Shift the transfer shift lever to the H position and 2–4 selector switch OFF.
- At the time of installation, apply MP grease to the tip of the shift lever.

2. A/T:

REMOVE TRANSFER SHIFT LEVER

(a) Remove the 2 bolts, 4 screws and rear console box.

(b) w/o One touch 2–4 selector system:
Remove the 2 screws, transfer shift lever knob and front console box.

(c) w/ One touch 2–4 selector system:
Remove the 2 screws, transfer shift lever knob and front console box, and disconnect the 2–4 selector connector.

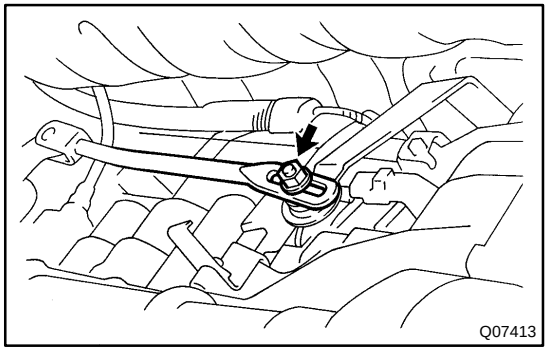

(d) Remove the nut and washer, and disconnect the shift control rod.
Torque: 13 N·m (133 kgf·cm, 10 ft·lbf)

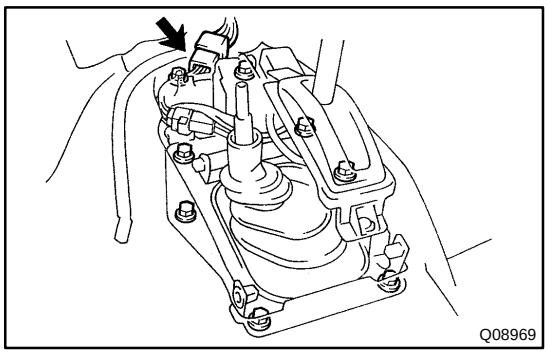

(e) Disconnect the connector and remove the 8 screws and transmission shift lever assembly.
Torque: 6.0 N·m (61 kgf·cm, 53 in.·lbf)

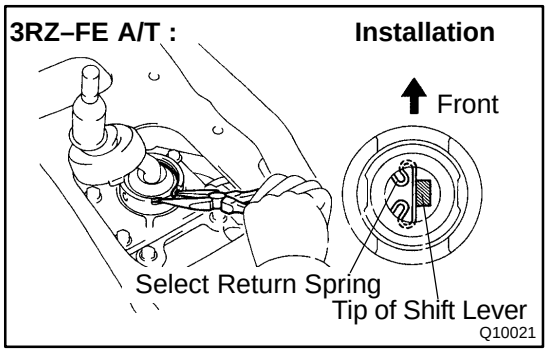

(f) Remove the shift lever.
(1) 3RZ–FE A/T:
Using pliers, remove the snap ring and pull out the shift lever.

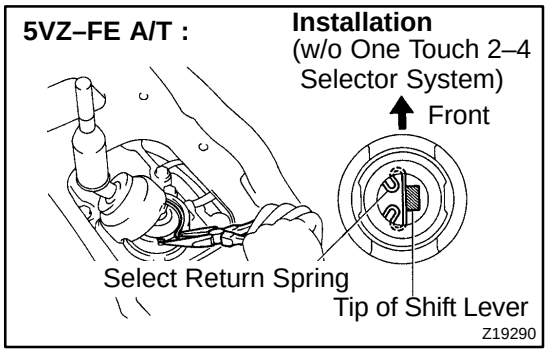

(2) 5VZ–FE A/T:
Using pliers, remove the snap ring and pull out the shift lever.

HINT:
- w/o One touch 2–4 selector system:
  Shift the transfer shift lever to the ”H4” position.
- w/ One touch 2–4 selector system:
  Shift the transfer shift lever to the ”H” position and 2–4 selector switch ”OFF”.
- At the time of installation, apply MP grease to the tip of the shift lever.

3. REMOVE BREATHER HOSE

Disconnect the breather hose from transfer upper cover and transmission control retainer.
Hose depth: 13 mm (0.51 in.) or more

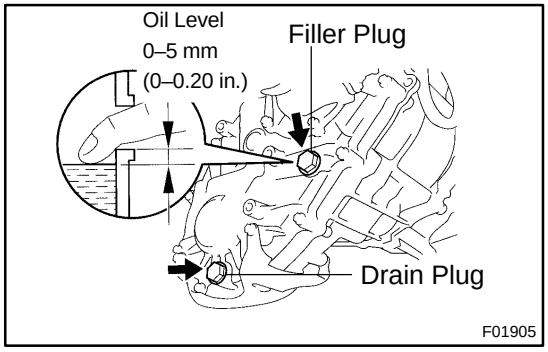

4. RAISE VEHICLE AND DRAIN TRANSFER OIL
Oil grade: API GL–4 or GL–5
Viscosity: SAE 75W–90
Capacity: 1.0 liters (1.1 US qts, 0.9 lmp. qts)

5. REMOVE FRONT AND REAR PROPELLER SHAFT
(See page PR–9)

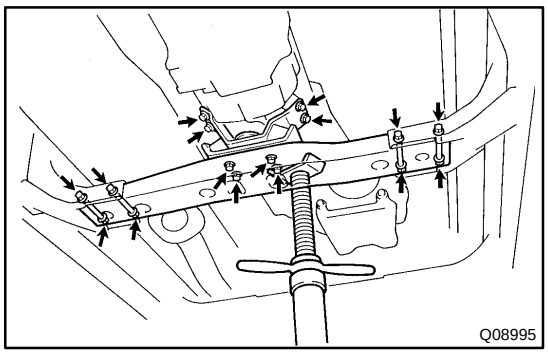

6. REMOVE CROSSMEMBER

(a) Support the transmission rear side.

(b) Remove the 4 set bolts of the engine rear mounting.

Torque: 18 N·m (185 kgf·cm, 13 ft·lbf)

(c) Disconnect the O–ring and remove the 4 bolts, nuts and crossmember.

Torque: 72 N·m (734 kgf·cm, 53 ft·lbf)

7. REMOVE ENGINE REAR MOUNTING

Remove the 4 bolts and engine rear mounting from the transmission.

Torque: 65 N·m (660 kgf·cm, 48 ft·lbf)

8. DISCONNECT VEHICLE SPEED SENSOR, HEATED OXYGEN SENSOR CLAMP AND TRANSFER INDICATOR SWITCH CONNECTORS.

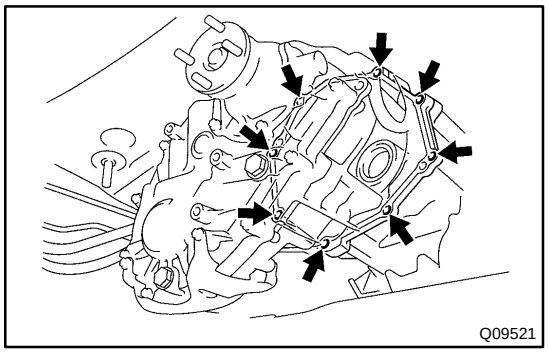

9. REMOVE TRANSFER FROM TRANSMISSION

(a) Remove the 8 bolts of the transfer adaptor mounting.

Torque: 24 N·m (240 kgf·cm, 17 ft·lbf)

(b) Pull out the transfer down and toward the rear.

HINT:

Take care not to damage the adaptor rear oil seal with the transfer input gear spline.

TROUBLESHOOTING

PROBLEM SYMPTOMS TABLE

TR00W–01

Use the table below to help you find the cause of the problem. The numbers indicate the priority of the likely cause of the problem. Check each part in order. If necessary, replace these parts.

Symptom	Suspect Area	See page
Noise	2. Oil (Level low) 3. Oil (Wrong) 4. Transfer faulty	– – TR–10
Oil leakage	1. Oil (Level too high) 2. Gasket (Damaged) 3. Oil seal (Worn or damaged) 4. O–ring (Worn or damaged)	– – TR–45 TR–45
Transfer corner braking	Center differential or transfer faulty	TR–10
Shift from 2WD to 4WD (H4 and L4) impossible	1. 4WD fuse 2. Wire harness 3. Vehicle speed sensor 4. 4WD position switch 5. 4WD indicator light 6. Actuator assembly 7. A.D.D. control system 8. 4WD control ECU 9. Transfer assembly	– – BE–39 TR–13 BE–37 TR–49 SA–67 TR–49 –
Shift from 2WD to 4WD (H4) impossible	1. 2–4 selector switch 2. Wire harness 3. 4WD control ECU	TR–49 – TR–49
Shift from 2WD to 4WD (L4) impossible	1. L4 position switch 2. Wire harness 3. 4WD control ECU	TR–13 – TR–49
Shift from 4WD (H4 and L4) to 2WD impossible	1. 4WD fuse 2. Wire harness 3. 4WD indicator light 4. Actuator assembly 5. A.D.D. control system 6. 4WD control ECU 7. Transfer assembly	– – BE–37 TR–49 SA–67 TR–49 –
Shift from 4WD (H4) to 2WD impossible	1. 2–4 selector switch 2. Wire harness 3. 4WD control ECU	TR–49 – TR–49
Shift from 4WD (L4) to 2WD impossible	1. L4 position switch 2. Wire harness 3. 4WD control ECU	TR–13 – TR–49

ABBREVIATIONS

The following abbreviations are used in this manual.

A/C	=	Air Conditioning
A/T	=	Automatic Transmission
ABS	=	Anti–Lock Brake System
ADD	=	Automatic Disconnecting Differential
COMB.	=	Combination
DIFF.	=	Differential
ECU	=	Electronic Control Unit
EGR	=	Exhaust Gas Recirculation
ESA	=	Electronic Spark Advance
EVAP	=	Evaporative Emission
INT	=	Intermittent
J/B	=	Junction Block
LH	=	Left–Hand
M/T	=	Manual Transmission
O/D	=	Overdrive
R/B	=	Relay Block
RH	=	Right–Hand
SFI	=	Sequential Multiport Fuel Injection
SPEC.	=	Specification
SRS	=	Supplemental Restraint System
SW	=	Switch
TEMP.	=	Temperature
VSV	=	Vacuum Switching Valve
w/	=	With
w/o	=	Without
2WD	=	Two Wheel Drive Vehicles
4WD	=	Four Wheel Drive Vehicles

* The titles given inside the components are the names of the terminals (terminal codes) and are not treated as being abbreviations.

K CONNECTOR LIST

A 5
Gray



A 7
Gray



A 9
Black



A13

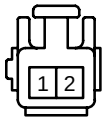

A15

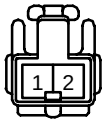

A18
Yellow

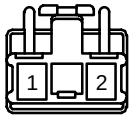

A19
Black

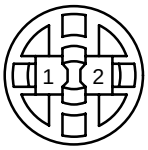

A21
Yellow

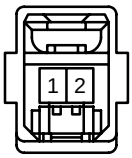

A22
Black

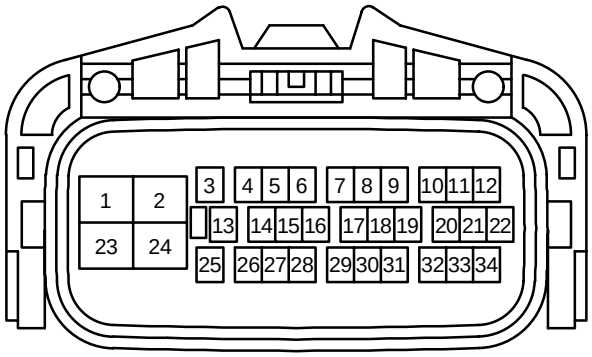

A23
Dark Gray



A24
Black

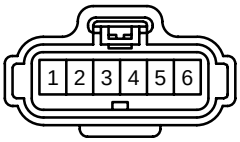

A25

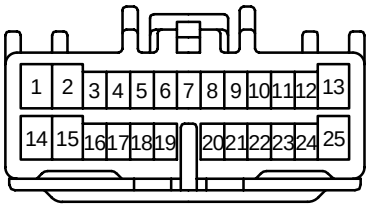

A26
Black

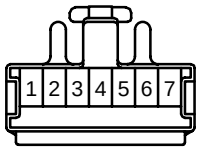

A27
Black

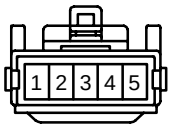

A28

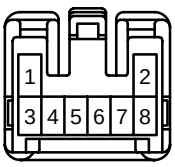

A29
Black



B 1
Gray



B 2
Gray



B 4
Black

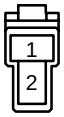

B 5
Black



B 6



C 1
Black



C 2
(3RZ–FE, 2RZ–FE) Dark Gray



C 2
(5VZ–FE) Black



C 3
Black



C 4



*1 : w/ 2–4 Select SW
*2 : w/o 2–4 Select SW

C 5



C 6

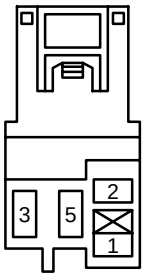

C 7

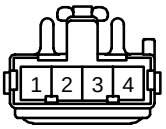

C 8
Gray

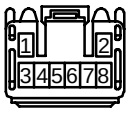

C 9

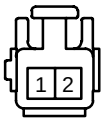

C10
Brown

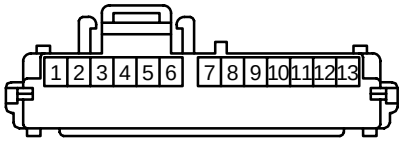

C12
Blue

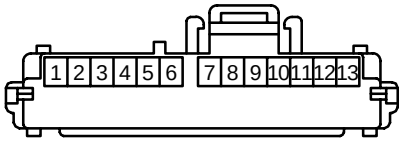

C13

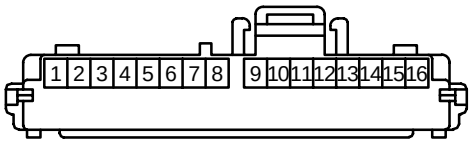

C14

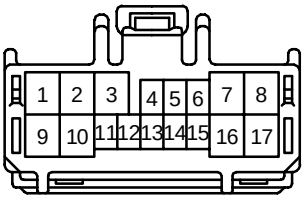

C15
Black

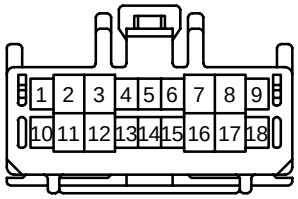

C16

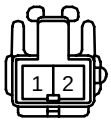

C17

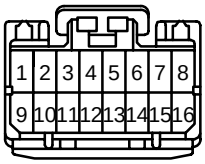

C19
Black

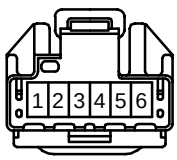

C20
Yellow

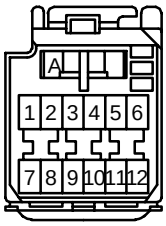

C21
Yellow

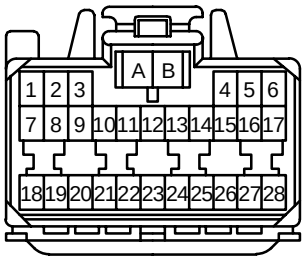

C22
Yellow

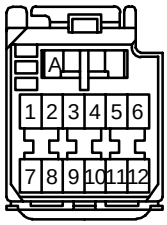

D 3
Blue

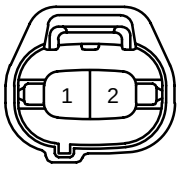

D 4
Gray

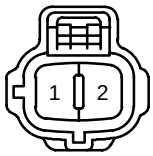

D 5
(*1) Gray



D 5
(*2) Blue

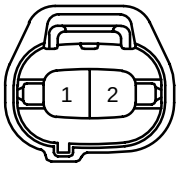

D 7
Black

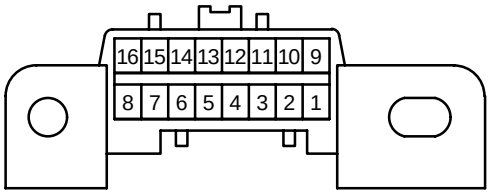

K CONNECTOR LIST

D 8

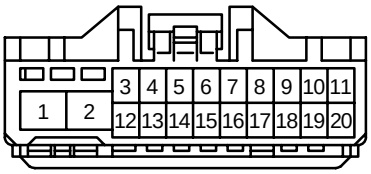

D 9

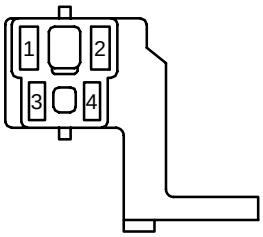

D13
Black



D15



D16



D20

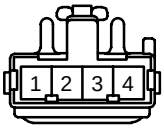

D21
Gray

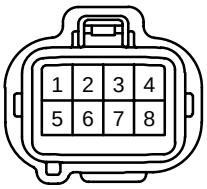

D22
Gray

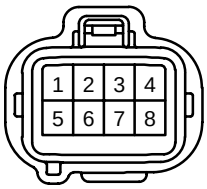

D25
Black



D26



D27



D28
Black

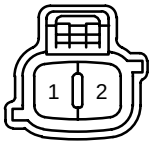

D29
Black

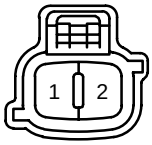

D30
Black



E 1
Dark Gray



E 2
(Ex.5VZ–FE) Black

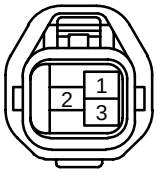

E 2
(5VZ–FE) Gray



E 3
Dark Gray



E 4
Black



E 5

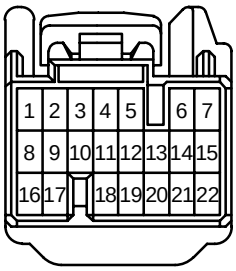

E 6

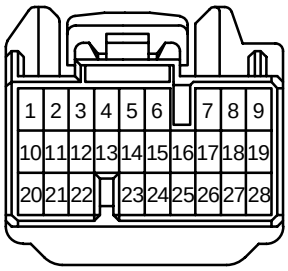

E 7

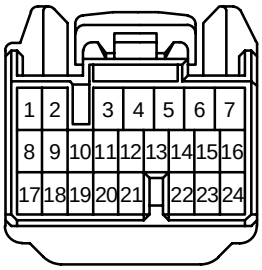

E 8

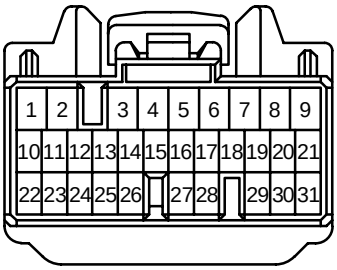

E10

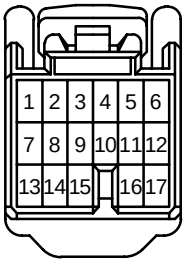

F 1
Gray



*3 : 5VZ–FE Ex.M/T 2WD
*4 : 3RZ–FE, 2RZ–FE,5VZ–FE Ex.M/T 2WD

F 2
Gray



F 3
Gray



F 4
Gray



F 6

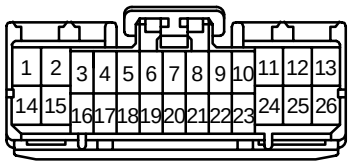

F 8
Dark Gray



F 9
Yellow



F10
Yellow



F11
Black
(See Page XX)

G 1

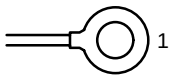

G 2
Black

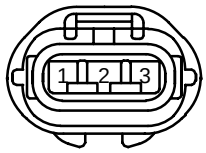

G 3



H 1
Black

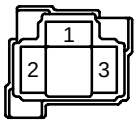

H 2
Black

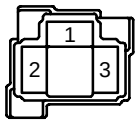

H 5
Black



H 6
Black

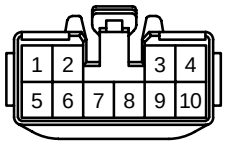

H 7

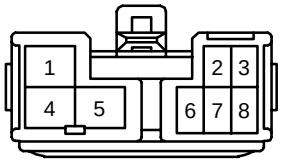

H 8

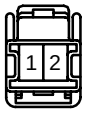

H 9
Dark Gray



H10
Black

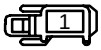

I 1
(3RZ–FE, 2RZ–FE) Black



I 1
(5VZ–FE) Gray



I 2
Black

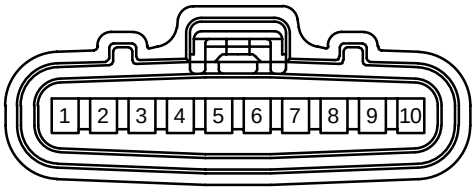

I 3
Black

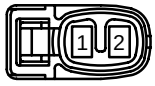

I 4
Black

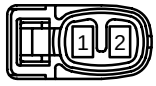

I 5
Black

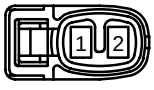

I 6
(*3) Gray



I 6
Brown



I 7
(*4) Gray



I 7
(5VZ–FE M/T 2WD) Brown



I 8
(*3) Gray



I 8
Brown



I 9
(*4) Gray



I 9
(5VZ–FE M/T 2WD) Brown



I10
(*3) Gray



I10
(5VZ–FE M/T 2WD) Brown



I11
(*3) Gray



I11
(5VZ–FE M/T 2WD) Brown



K CONNECTOR LIST

*5 : Double, Extra Cab

I14

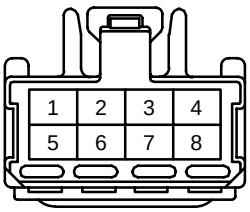

I16
(*5)



I16
(Regular Cab)



I20
Black

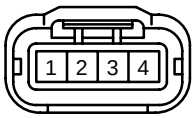

I21
Black

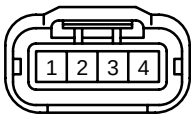

I22
Black

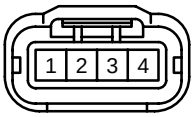

I23
Black

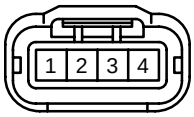

J 1
Gray

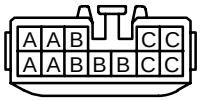

J 9
Gray

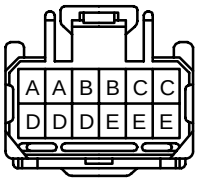

J10

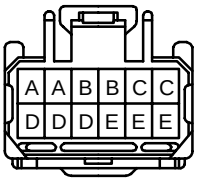

J11
Blue

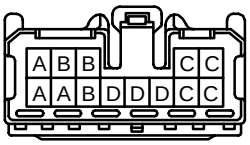

J13
Gray

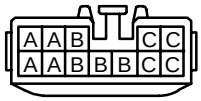

K 1
Dark Gray



K 2
Black



K 3
Black



L 1



L 2



M 1
Black

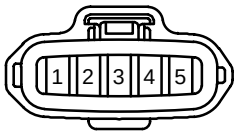

N 1
Gray



O 1
Gray

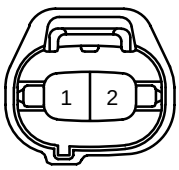

O 2
Gray



O 6

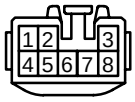

P 1
(Except 2RZ–FE) Black

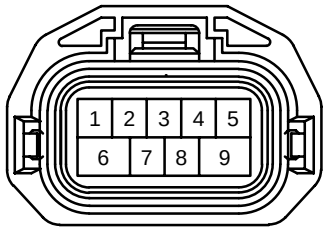

P 1
(2RZ–FE) Gray

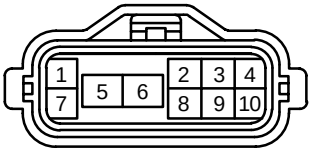

P 2
Gray

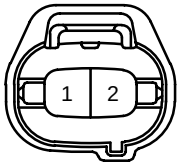

P 3
Gray

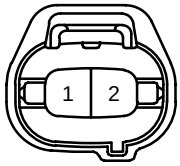

P 4



P 5



*6 : Except Double Cab

P 6

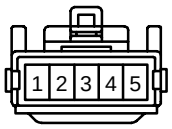

P 7
(Double Cab)

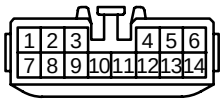

P 7
(*6)

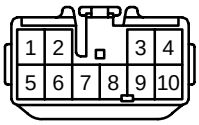

P 8

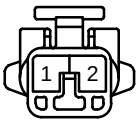

P 9

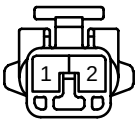

P10
Black



P13
Gray



P14
Gray



P19

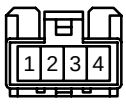

P20
Yellow

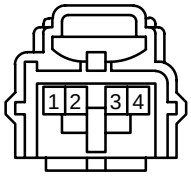

P21
Yellow

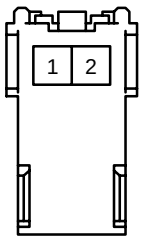

P22
Yellow

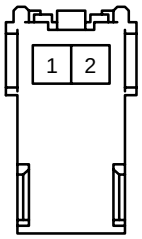

P23



P24



P25



P26



P27

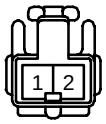

P28

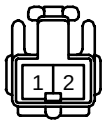

R 1
Blue

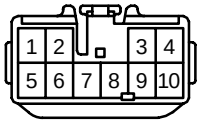

R 2
Blue

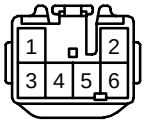

R 3

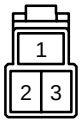

R 4
Black

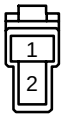

R 6

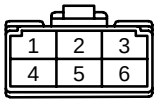

R 7
Black

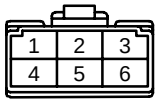

R 8



R 9



R10

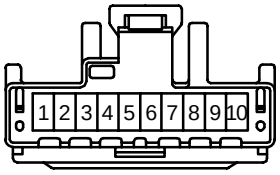

R11
Gray



R12
Gray



R13
Gray



R14
Gray



R15



R16

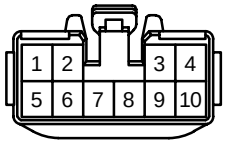

S 1
Black



K CONNECTOR LIST

*3 : 5VZ–FE Ex.M/T 2WD
*4 : 3RZ–FE, 2RZ–FE,5VZ–FE Ex.M/T 2WD
*7 : Double Cab, Regular Cab

S 2
(3RZ–FE, 2RZ–FE)

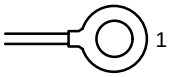

S 2
(5VZ–FE)

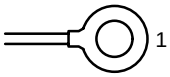

S 4

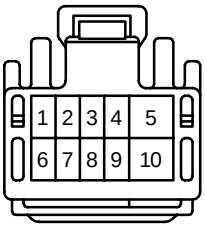

S 5

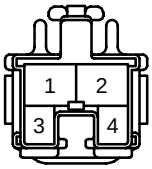

S 6

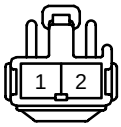

S 7

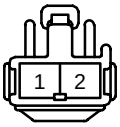

S 8
(*7)

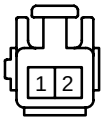

S 8
(Extra Cab)



S 9
(*7)

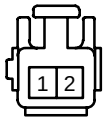

S 9
(Extra Cab)

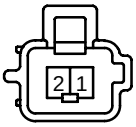

T 1
(*4) Black



T 1
(*3) Black



T 2
Black

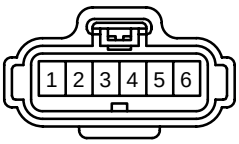

T 3



T 4

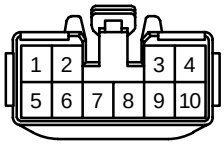

T 5

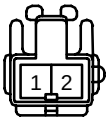

T 6

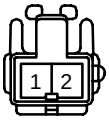

T 7
Gray



T 8
Gray

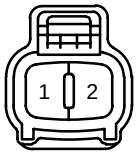

T 9



U 1
(A/T)

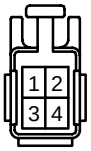

U 1
(M/T) Blue

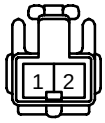

V 1
Black

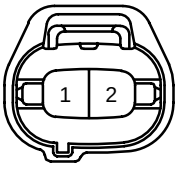

V 3
Green



V 4
Black

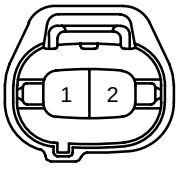

V 8
Black



V10
Black



V11
Gray



V12
Blue

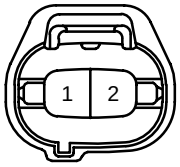

W 1
Gray



W 2
(3RZ–FE, 2RZ–FE) Gray



W 2
(5VZ–FE) Gray



W 3
Black

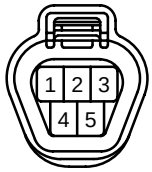

: Location of Connector Joining Wire Harness and Wire Harness
: Location of Ground Points

[5VZ–FE]

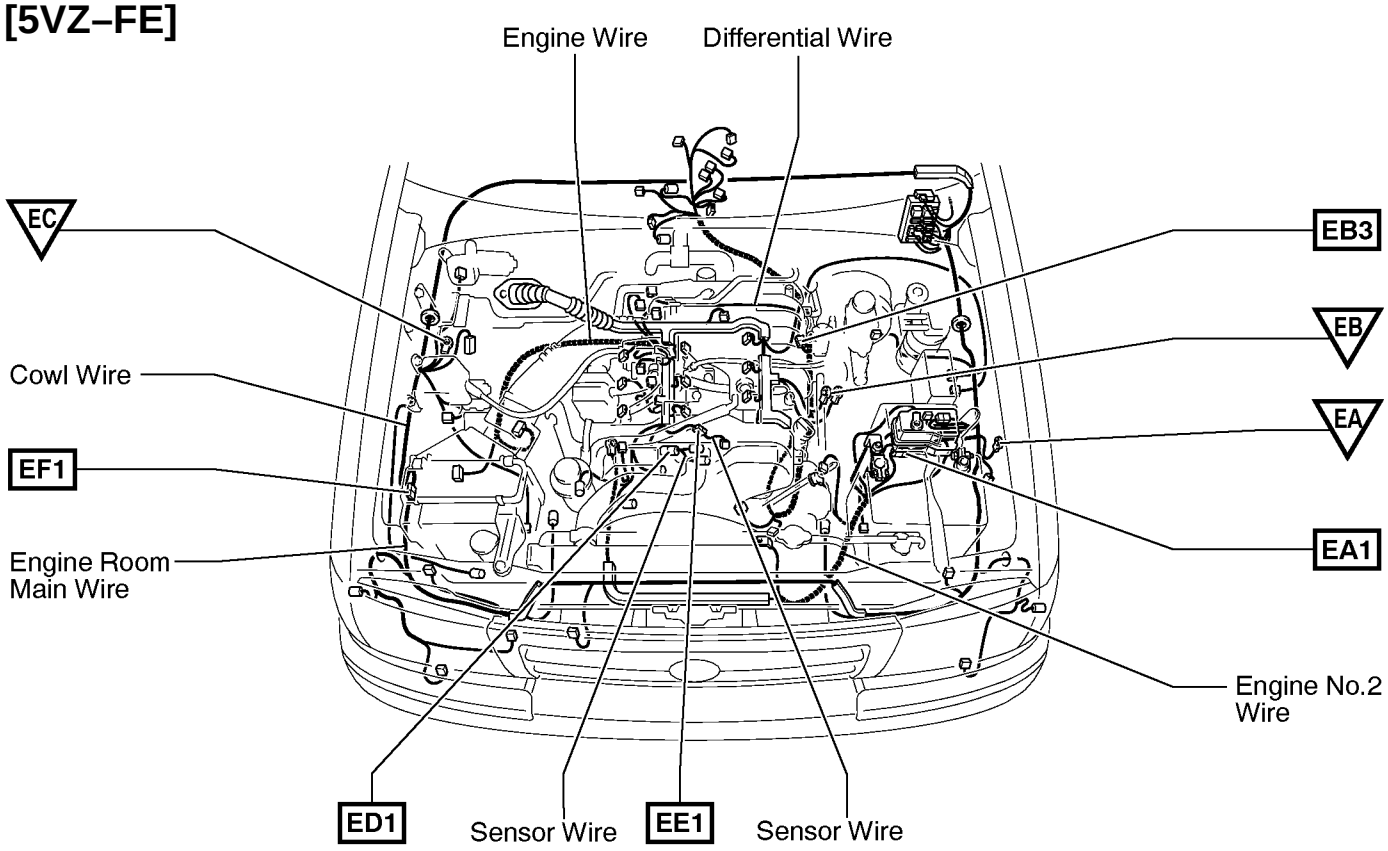

: Location of Splice Points

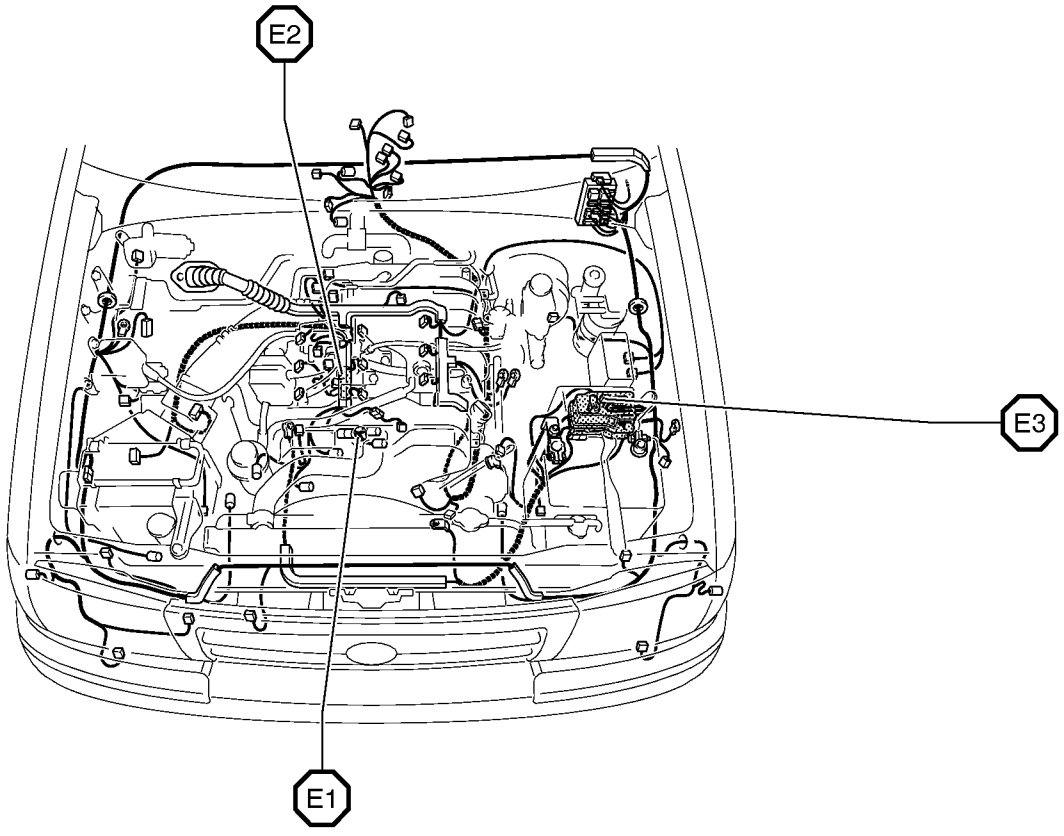

Connector Joining Wire Harness and Wire Harness

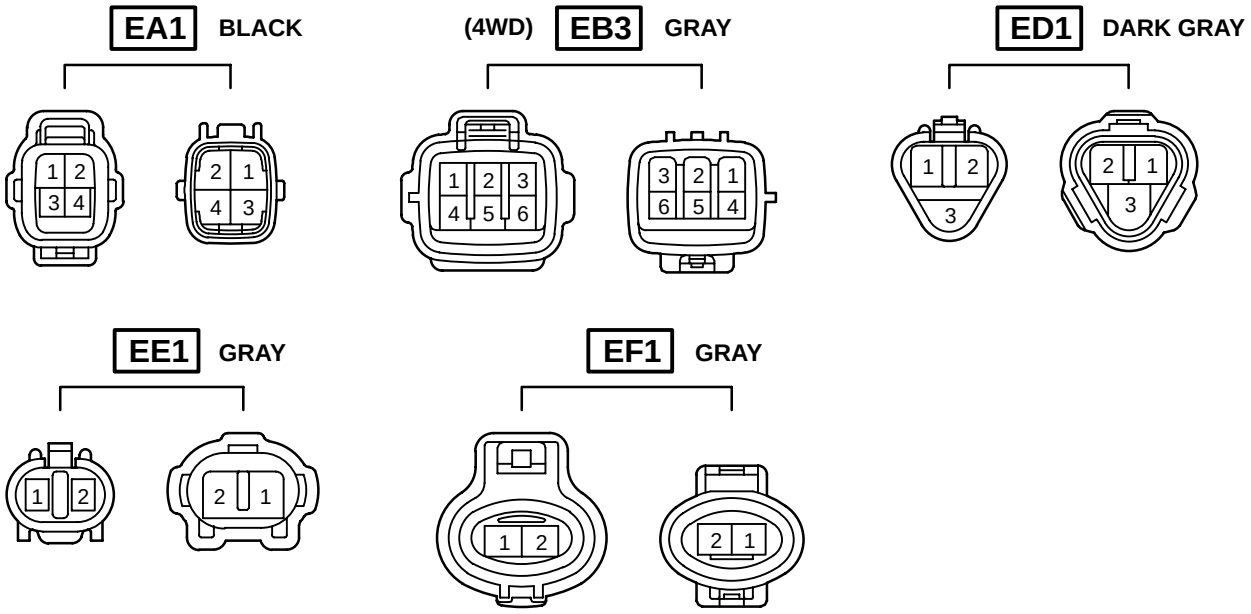

Code	Joining Wire Harness and Wire Harness (Connector Location)
EA1	Engine Room Main Wire and Engine No.2 Wire (Near the Battery)
EB3	Engine Wire and Differential Wire (Front Differential Upper Side)
ED1	Sensor Wire and Engine Wire (Over the Cylinder Head)
EE1	Engine Wire and Sensor Wire (Over the Cylinder Head)
EF1	Cowl Wire and Engine Room Main Wire (Front Right Fender)

: Location of Connector Joining Wire Harness and Wire Harness
: Location of Ground Points

[3RZ–FE, 2RZ–FE]

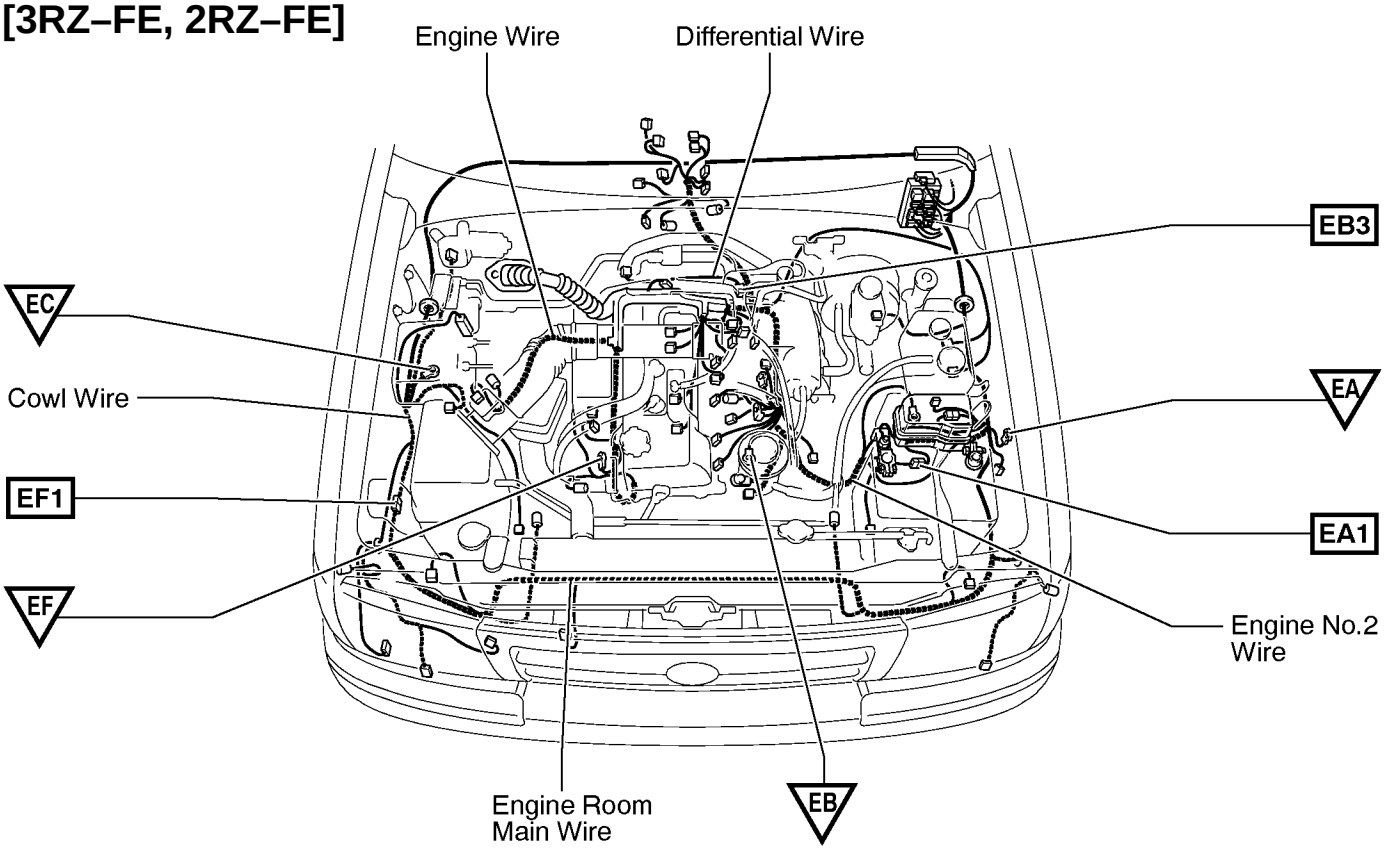

: Location of Splice Points

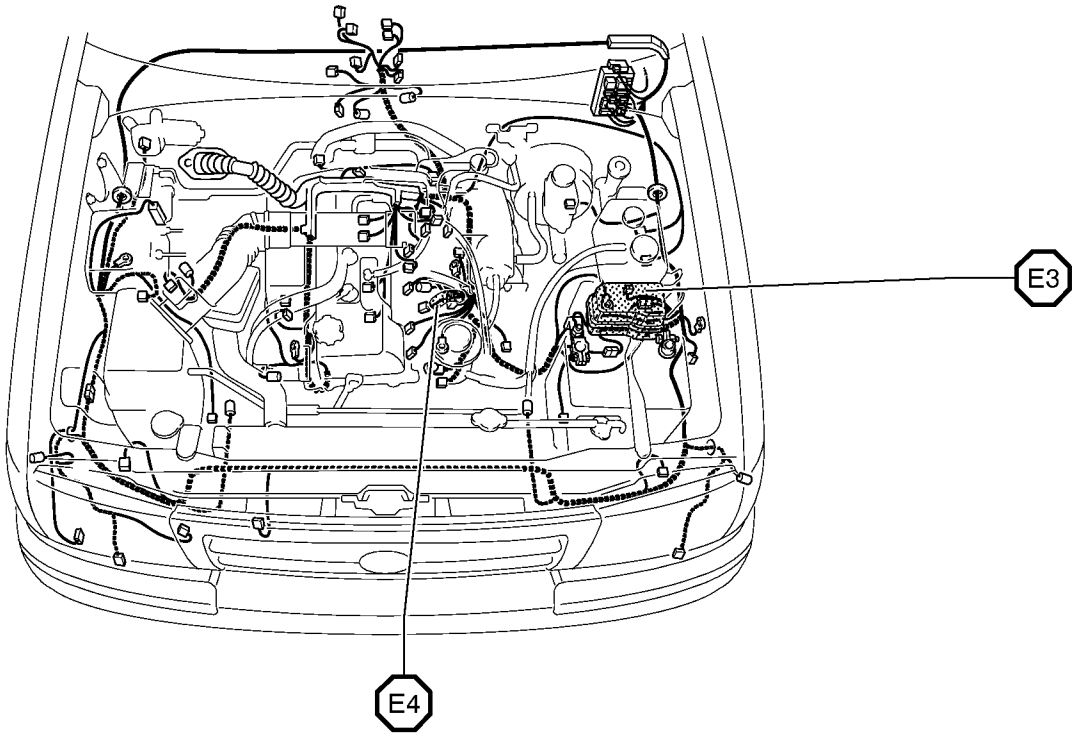

Connector Joining Wire Harness and Wire Harness

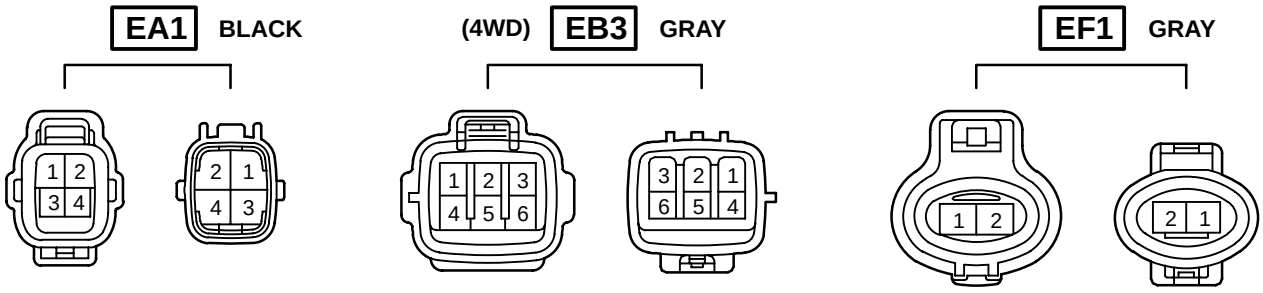

Code	Joining Wire Harness and Wire Harness (Connector Location)
EA1	Engine Room Main Wire and Engine No.2 Wire (Near the Battery)
EB3	Engine Wire and Differential Wire (Front Differential Upper Side)
EF1	Cowl Wire and Engine Room Main Wire (Front Right Fender)

▭ : Location of Connector Joining Wire Harness and Wire Harness

▽ : Location of Ground Points

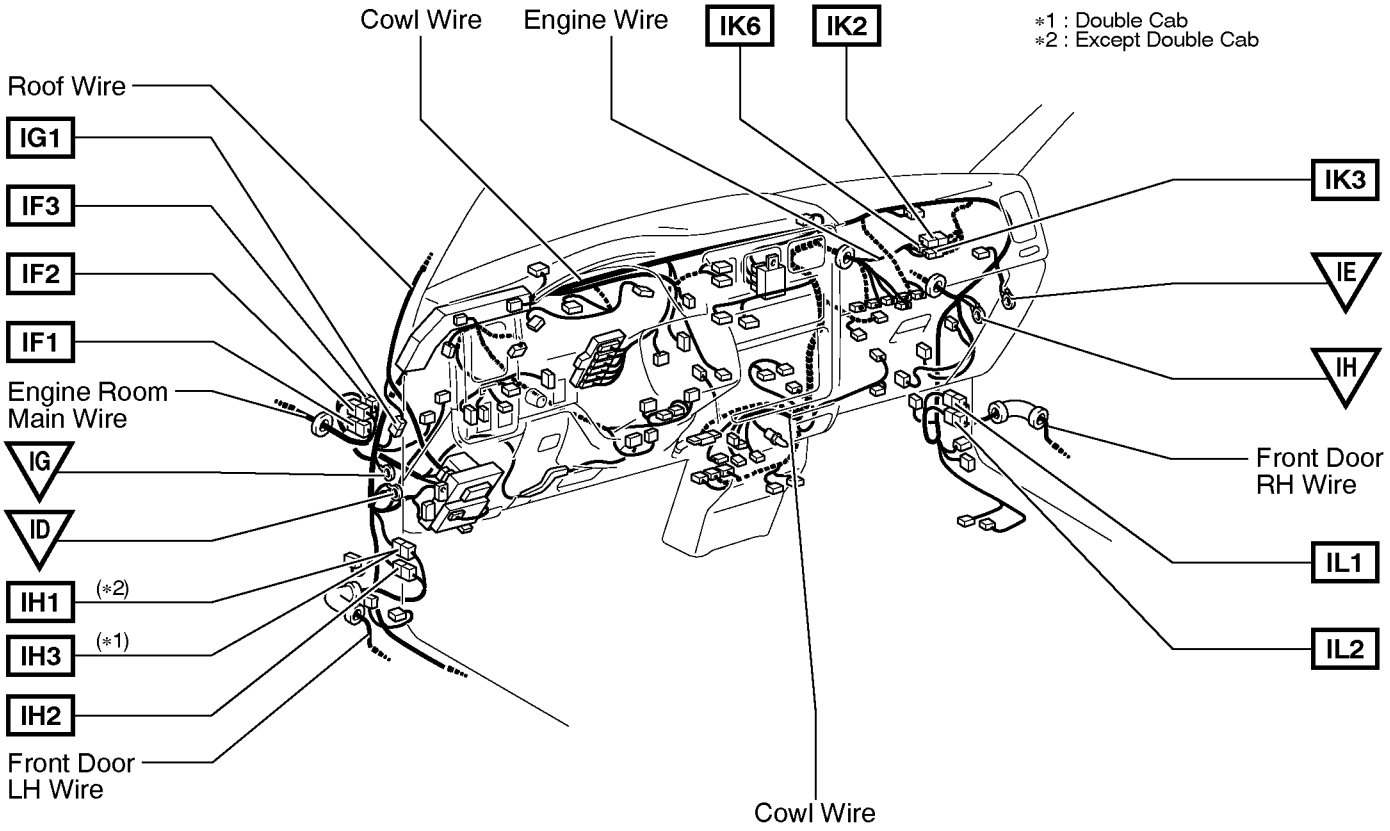

○ : Location of Splice Points

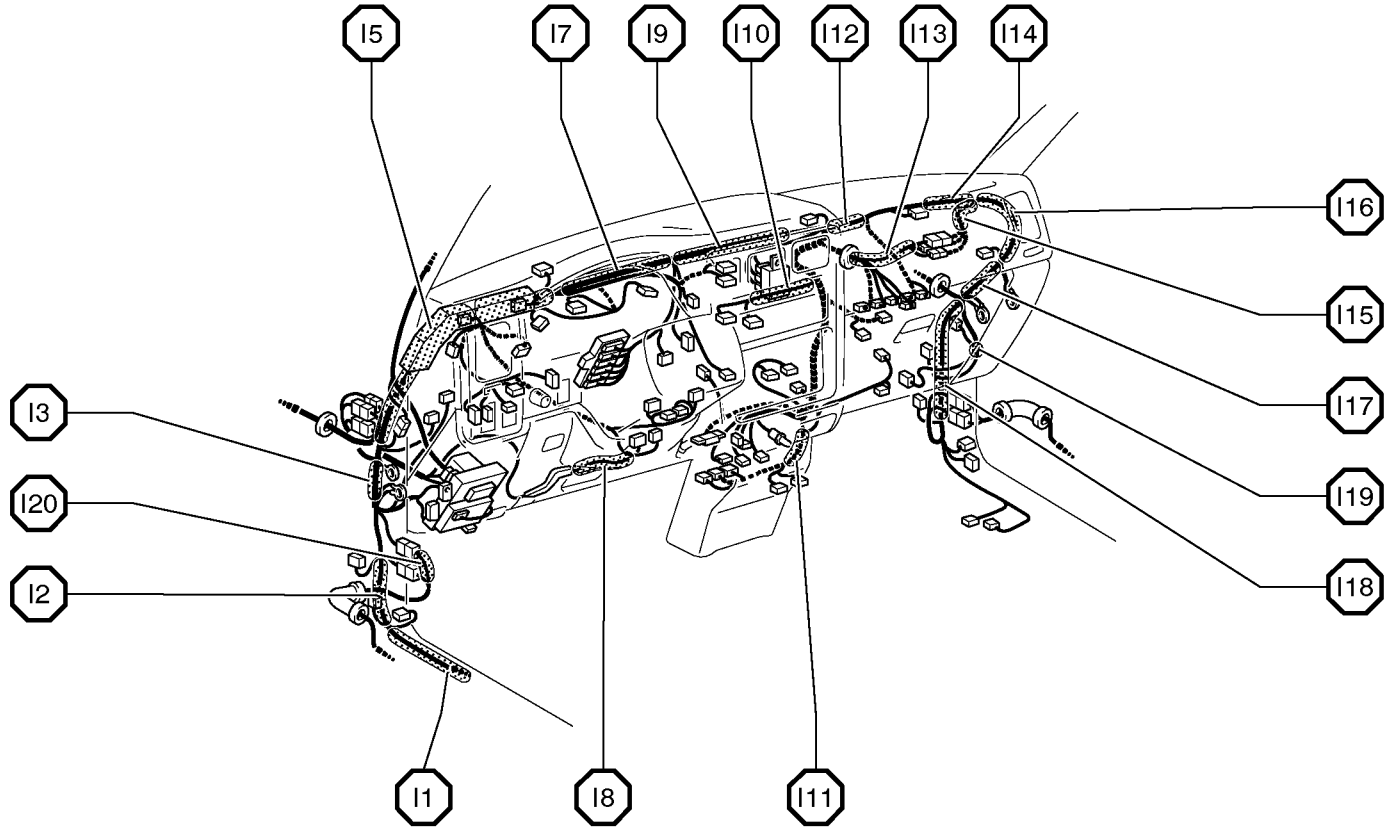

Connector Joining Wire Harness and Wire Harness

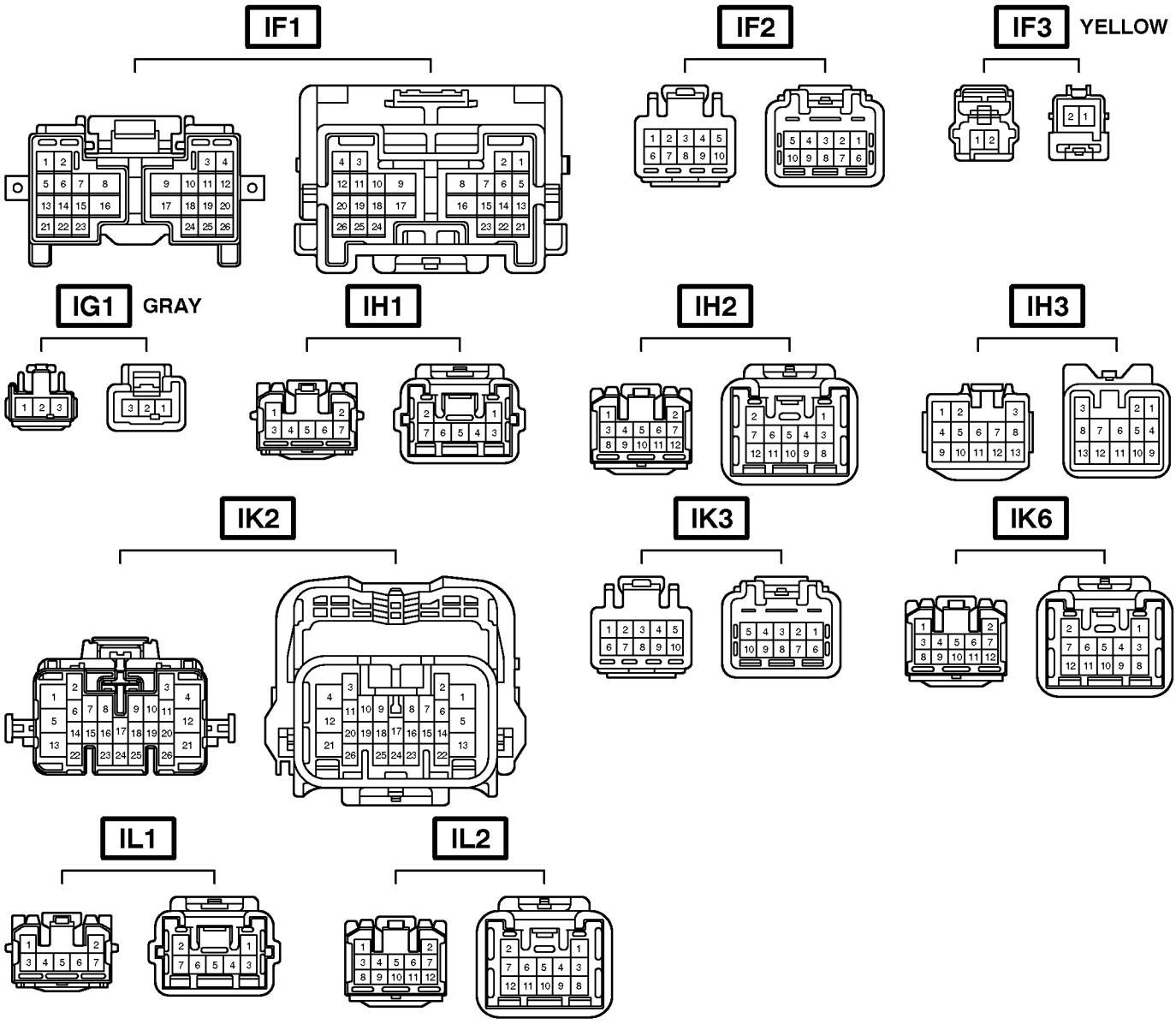

Code	Joining Wire Harness and Wire Harness (Connector Location)
IF1	Engine Room Main Wire and Cowl Wire (Left Kick Panel)
IF2	
IF3	
IG1	Cowl Wire and Roof Wire (Left Kick Panel)
IH1	Front Door LH Wire and Cowl Wire (Left Kick Panel)
IH2	
IH3	
IK2	Engine Wire and Cowl Wire (Above the Glove Box)
IK3	
IK6	
IL1	Front Door RH Wire and Cowl Wire (Right Kick Panel)
IL2	

▭ : Location of Connector Joining Wire Harness and Wire Harness

[Double Cab]

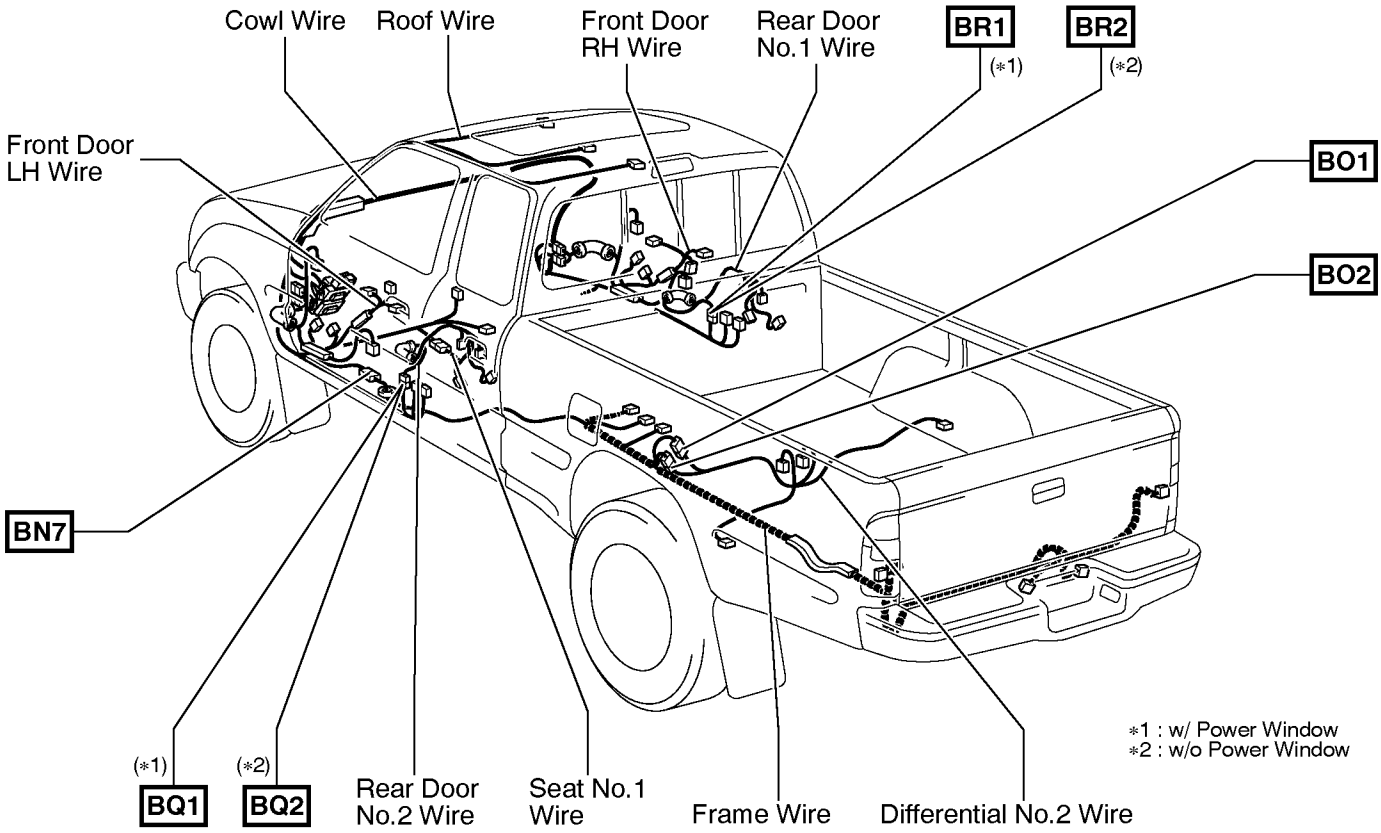

◯ : Location of Splice Points

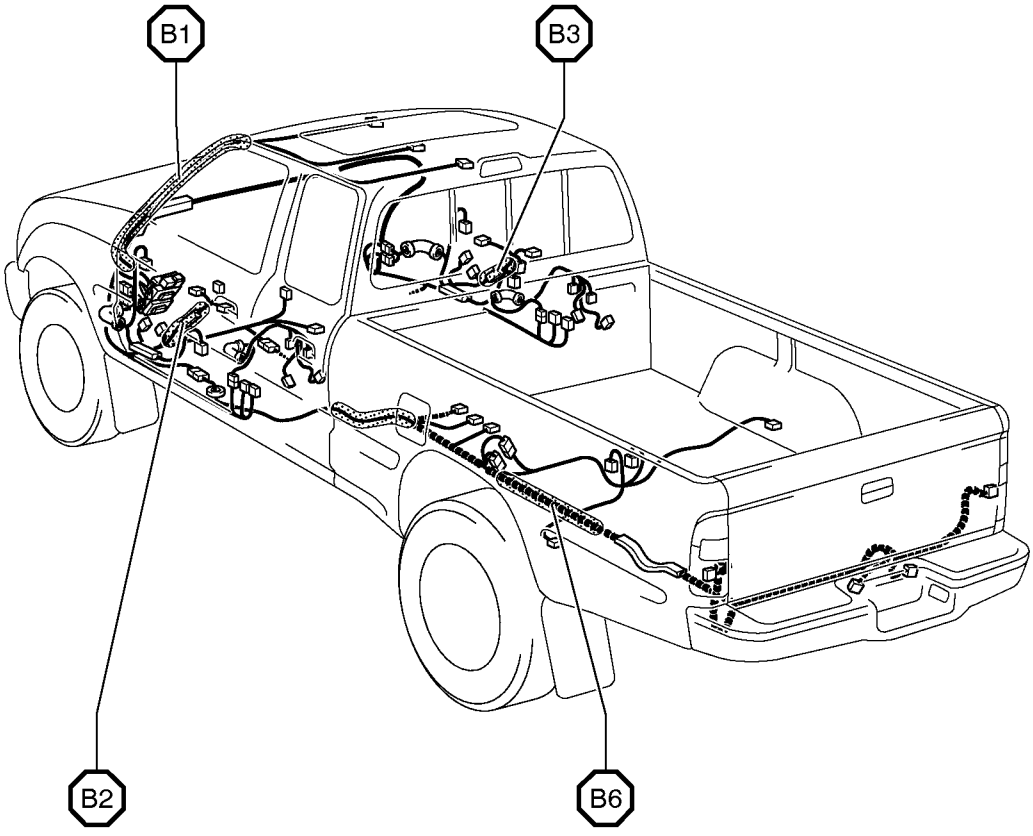

Connector Joining Wire Harness and Wire Harness

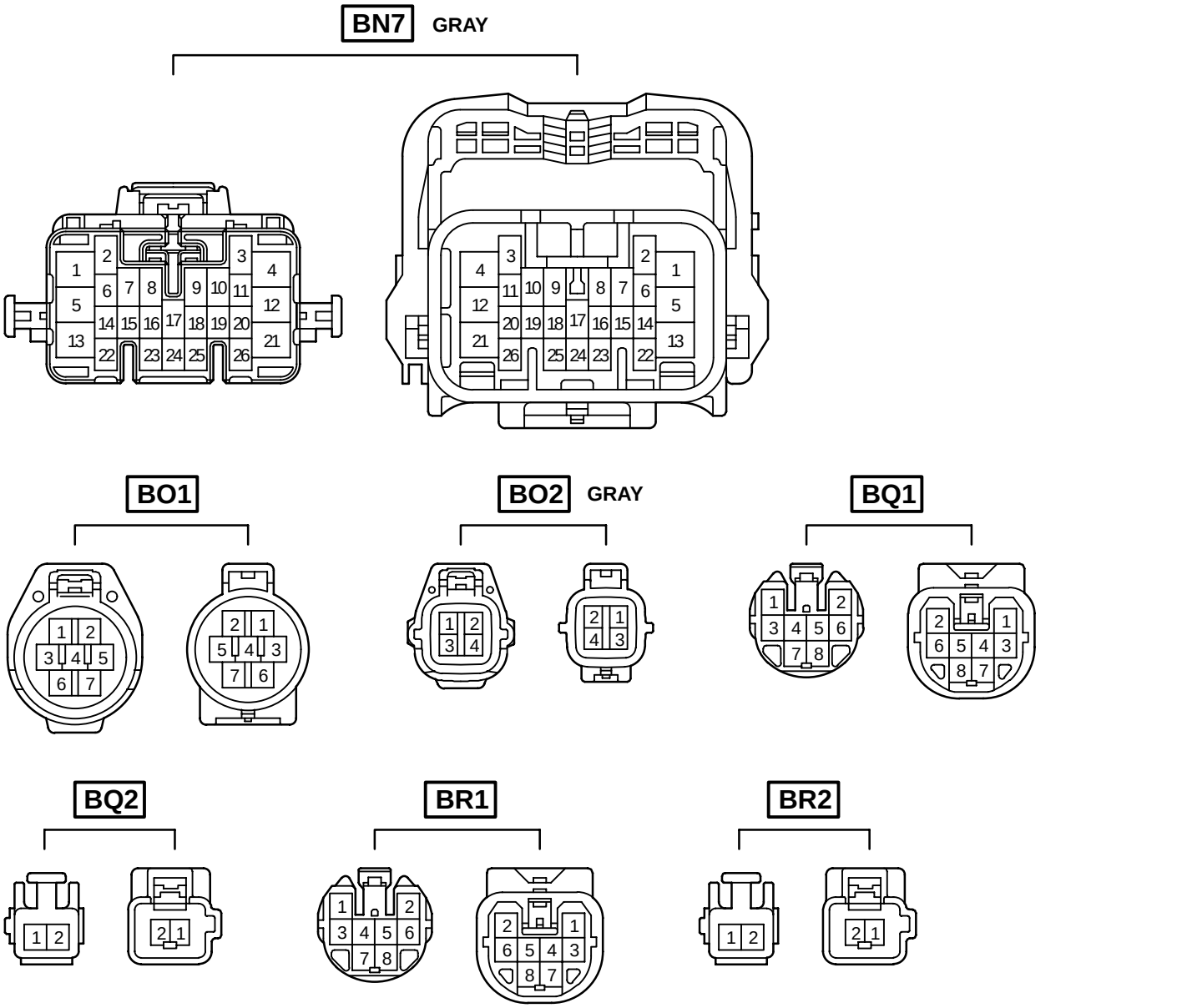

Code	Joining Wire Harness and Wire Harness (Connector Location)
BN7	Frame Wire and Cowl Wire (Under the Driver's Seat)
BO1	Frame Wire and Differential No.2 Wire (Rear Side Member LH)
BO2	
BQ1	Rear Door No.2 Wire and Cowl Wire (Under the Left Center Pillar)
BQ2	
BR1	Rear Door No.1 Wire and Cowl Wire (Under the Right Center Pillar)
BR2	

▭ : Location of Connector Joining Wire Harness and Wire Harness

[Except Double Cab]

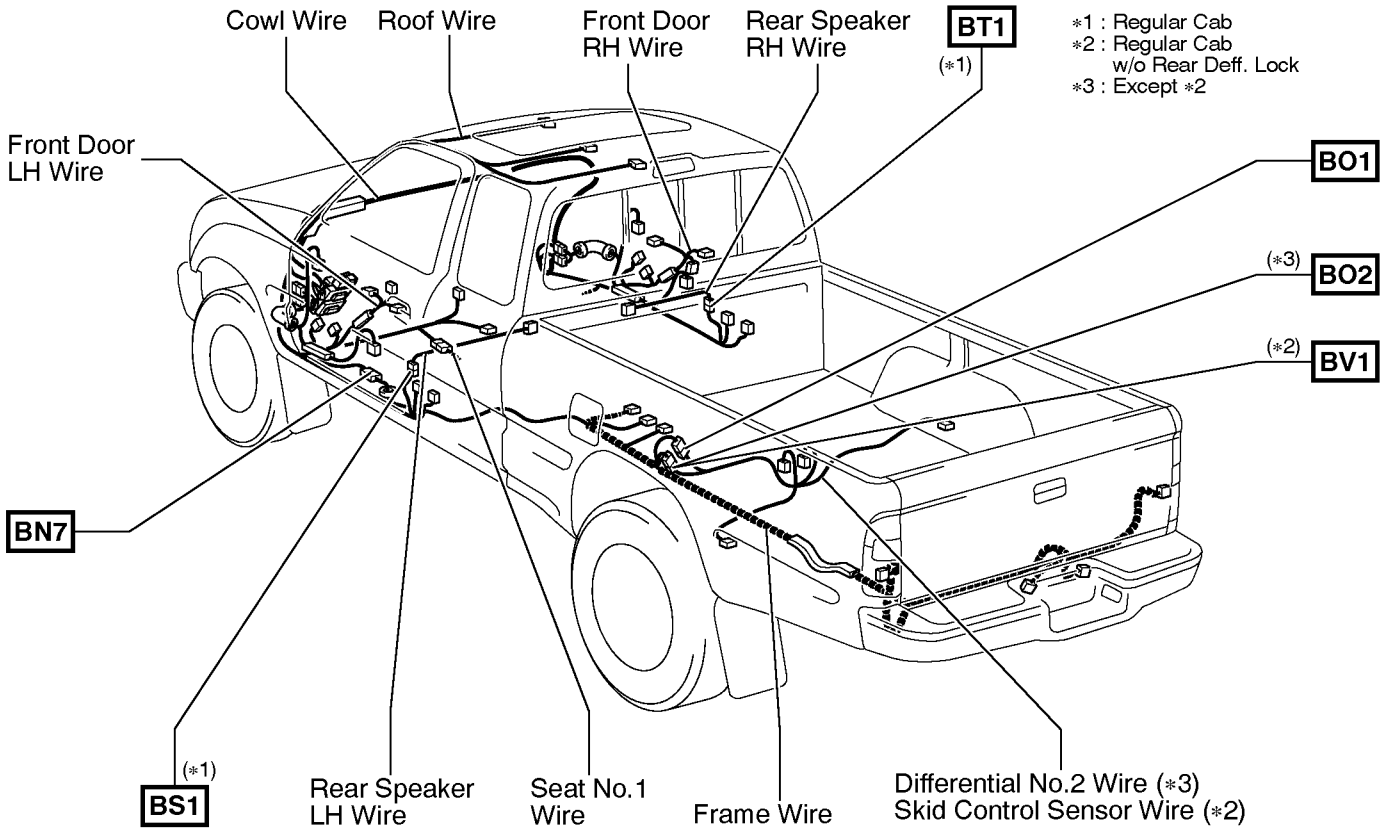

⬡ : Location of Splice Points

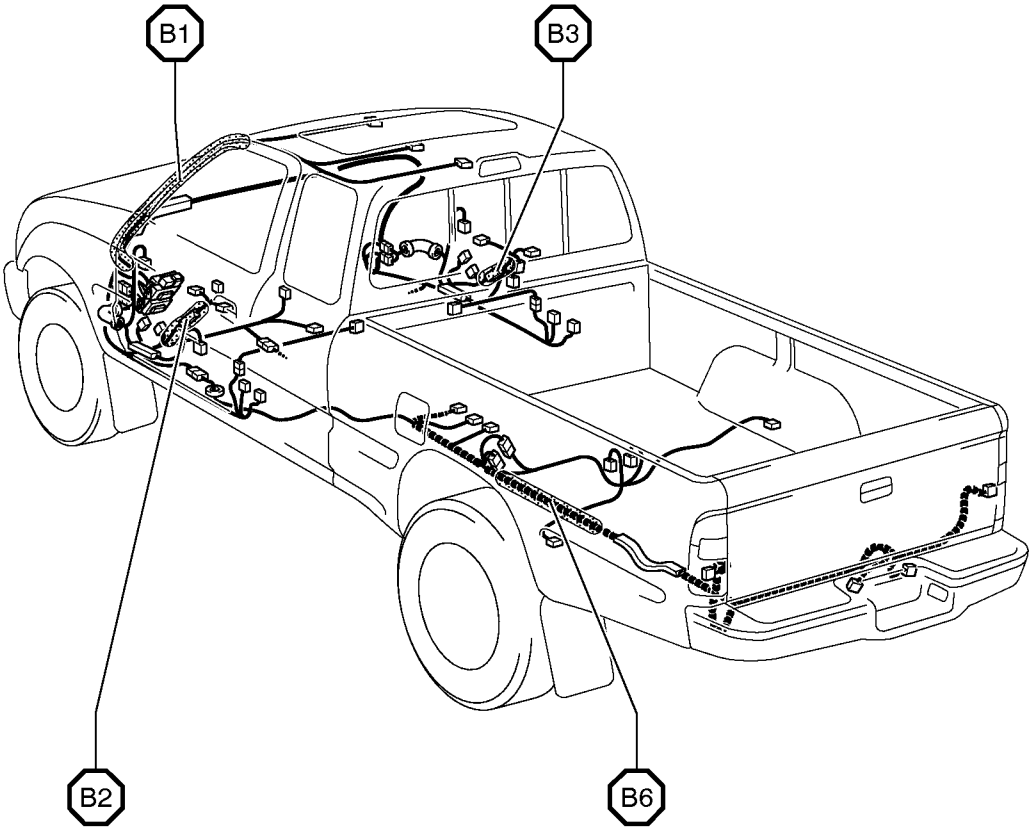

Connector Joining Wire Harness and Wire Harness

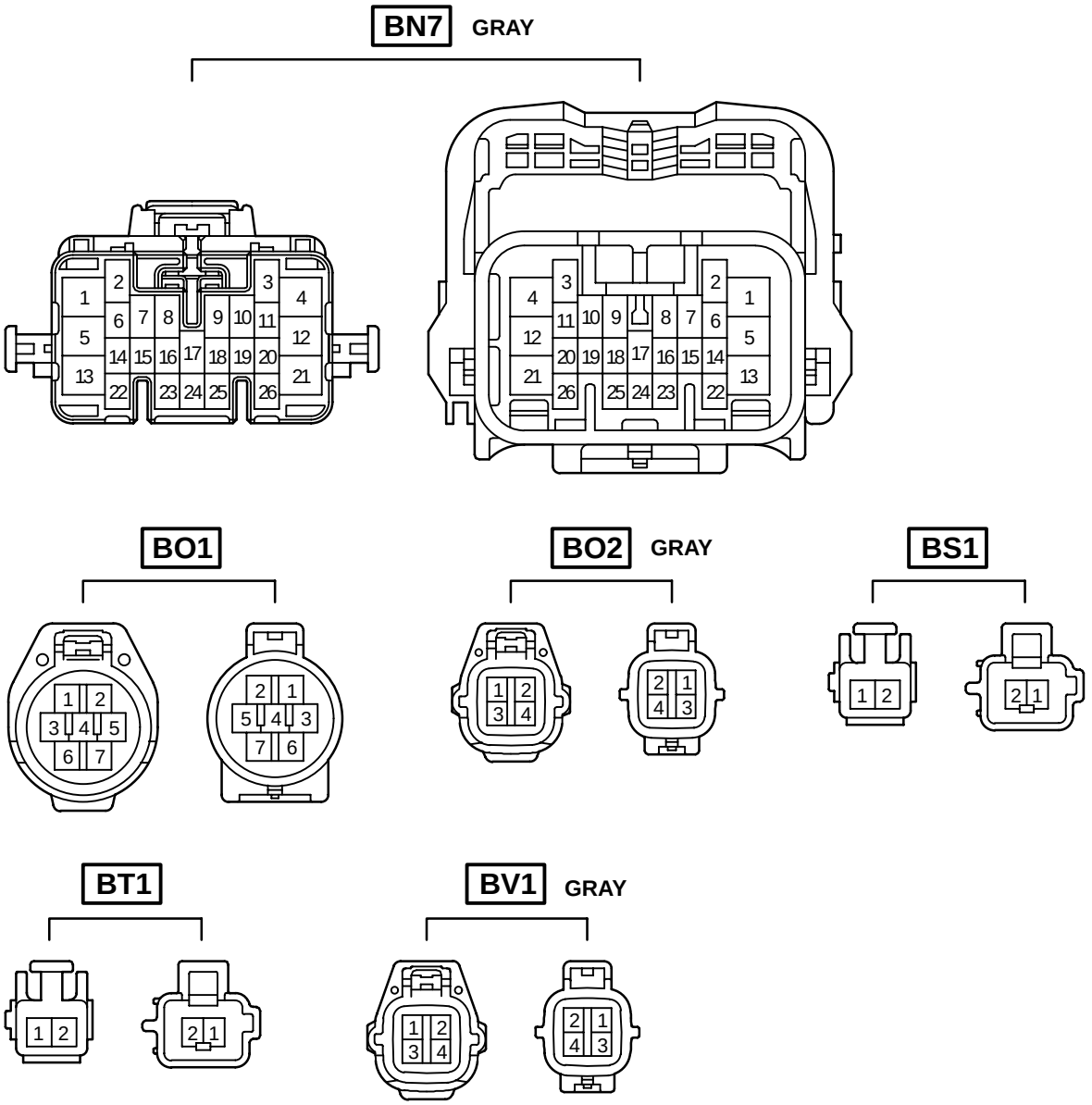

Code	Joining Wire Harness and Wire Harness (Connector Location)
BN7	Frame Wire and Cowl Wire (Under the Driver's Seat)
BO1	Frame Wire and Differential No.2 Wire (Rear Side Member LH)
BO2	
BS1	Rear Speaker LH Wire and Cowl Wire (Under the Left Center Pillar)
BT1	Rear Speaker RH Wire and Cowl Wire (Under the Right Center Pillar)
BV1	Frame Wire and Skid Control Sensor Wire (Rear Side Member LH)

▭ : Location of Connector Joining Wire Harness and Wire Harness

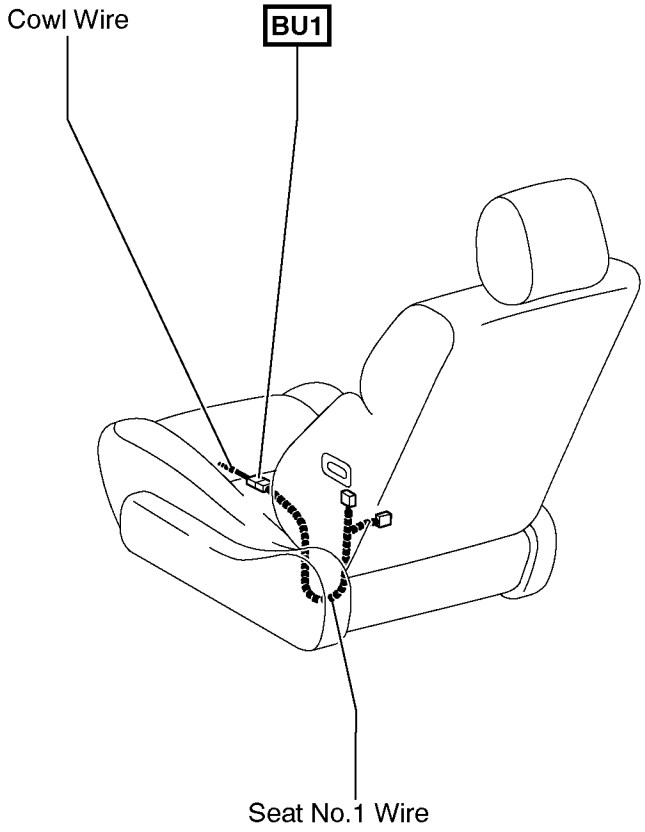

Connector Joining Wire Harness and Wire Harness

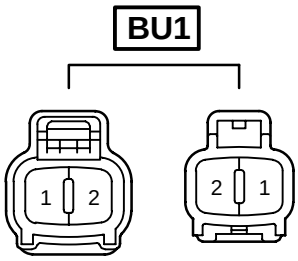

Code	Joining Wire Harness and Wire Harness (Connector Location)
BU1	Cowl Wire and Seat No.1 Wire (Under the Driver's Seat)

MEMO

Position of Parts in Engine Compartment

[5VZ–FE]

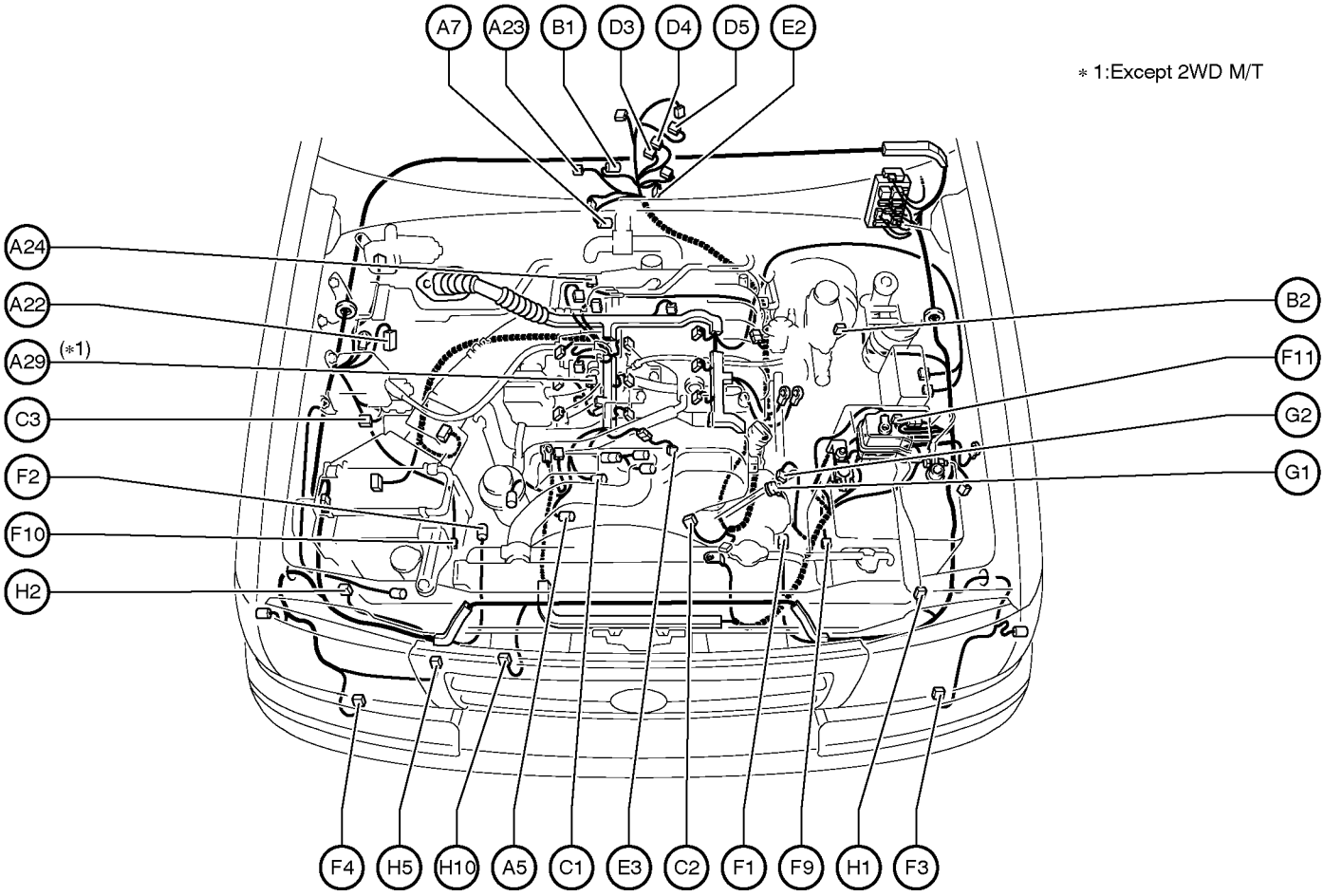

A 5 A/C Magnetic Clutch
A 7 A/T Oil Temp. Sensor
A22 ABS Actuator with ECU
A23 Air Fuel Ratio Sensor (Bank 1 Sensor 1)
A24 ADD Actuator
A29 Accel Position Sensor

B 1 Back–Up Light SW
B 2 Brake Fluid Level Warning SW

C 1 Camshaft Position Sensor
C 2 Crankshaft Position Sensor
C 3 Cruise Control Actuator

D 3 Detection SW (Transfer L4 Position)
D 4 Detection SW (Transfer Neutral Position)
D 5 Detection SW (Transfer 4WD Position)

E 2 Electronically Controlled Transmission Solenoid
E 3 Engine Coolant Temp. Sensor

F 1 Front ABS Speed Sensor LH
F 2 Front ABS Speed Sensor RH
F 3 Front Turn Signal Light LH
F 4 Front Turn Signal Light RH
F 9 Front Airbag Sensor LH
F10 Front Airbag Sensor RH
F11 Fuse Box

G 1 Generator
G 2 Generator

H 1 Headlight LH
H 2 Headlight RH
H 5 Horn (High)
H10 Horn (Low)

Position of Parts in Engine Compartment

[5VZ–FE]

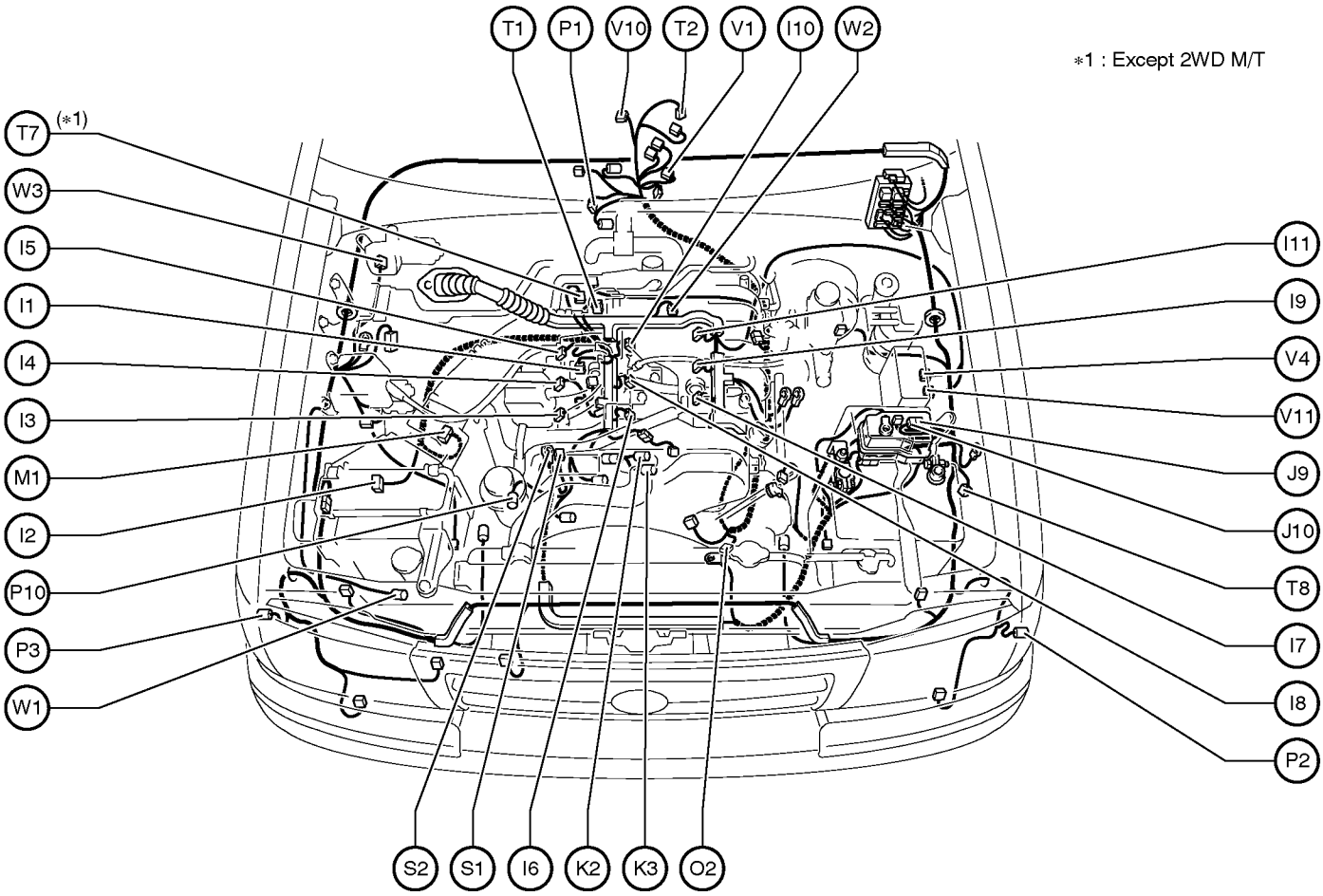

I 1 Idle Air Control Valve
I 2 Igniter
I 3 Ignition Coil No.1
I 4 Ignition Coil No.2
I 5 Ignition Coil No.3
I 6 Injector No.1
I 7 Injector No.2
I 8 Injector No.3
I 9 Injector No.4
I 10 Injector No.5
I 11 Injector No.6

J 9 Junction Connector
J 10 Junction Connector

K 2 Knock Sensor 1
K 3 Knock Sensor 2

M 1 Mass Air Flow Meter

O 2 Oil Pressure SW

P 1 Park/Neutral Position SW
P 2 Parking Light LH
P 3 Parking Light RH
P 10 Power Steering Oil Pressure SW

S 1 Starter
S 2 Starter

T 1 Throttle Position Sensor
T 2 2–4 Select Motor
T 7 Throttle Control Motor
T 8 TVIP Warning Buzzer

V 1 Vehicle Speed Sensor
(Electronically Controlled Transmission)
V 4 VSV (EVAP)
V 10 Vehicle Speed Sensor
V 11 VSV (Canister Closed Valve)

W 1 Washer Motor and Washer Level Sensor
(Cold Area Spec.) or Washer Motor
(Except Cold Area Spec.)
W 2 Water Temp. Sender
W 3 Wiper Motor

Position of Parts in Engine Compartment

[3RZ–FE, 2RZ–FE]

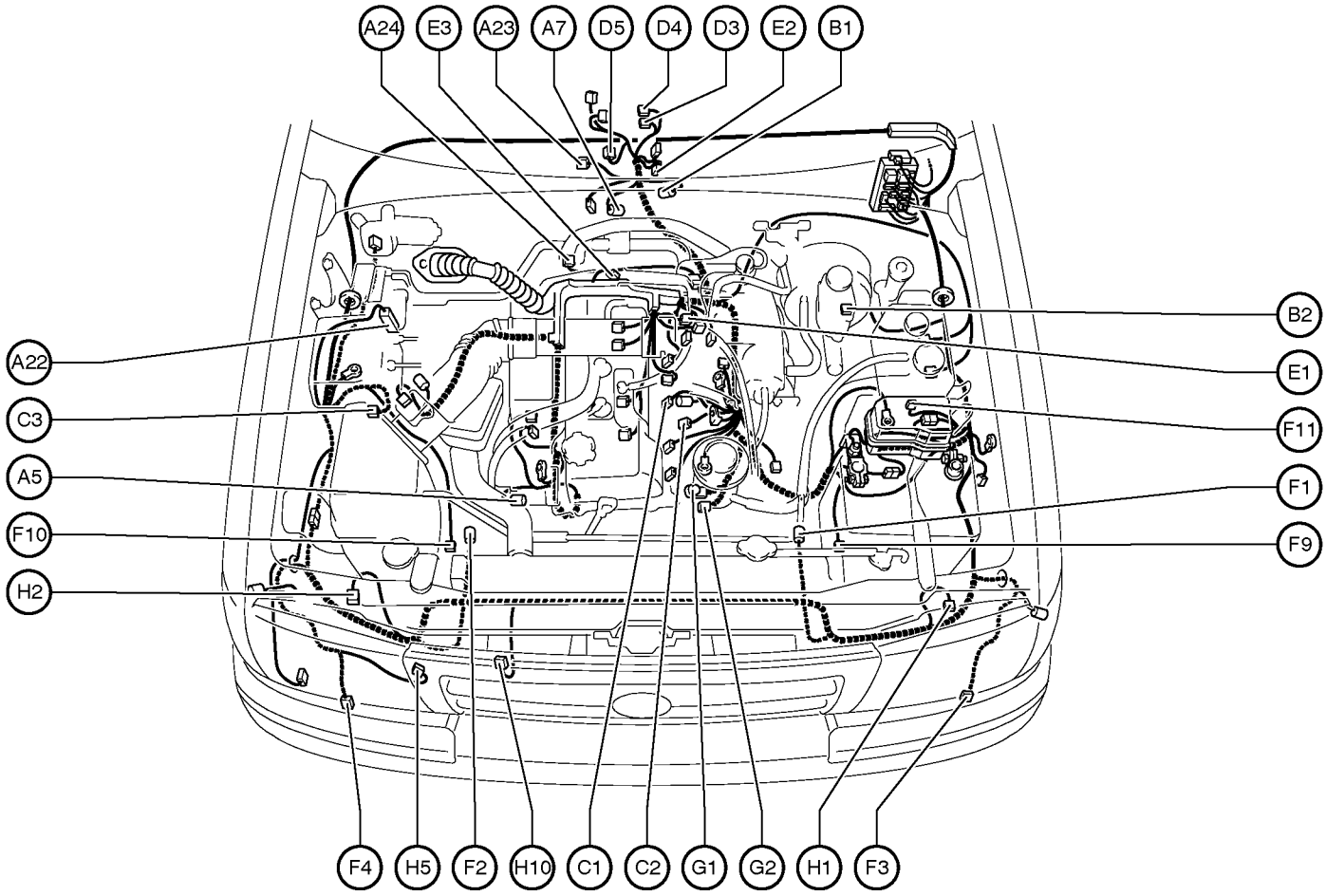

A 5 A/C Magnetic Clutch
A 7 A/T Oil Temp. Sensor
A22 ABS Actuator with ECU
A23 Air Fuel Ratio Sensor (Bank 1 Sensor 1)
A24 ADD Actuator

B 1 Back–Up Light SW
B 2 Brake Fluid Level Warning SW

C 1 Camshaft Position Sensor
C 2 Crankshaft Position Sensor
C 3 Cruise Control Actuator

D 3 Detection SW (Transfer L4 Position)
D 4 Detection SW (Transfer Neutral Position)
D 5 Detection SW (Transfer 4WD Position)

E 1 EGR Gas Temp. Sensor
E 2 Electronically Controlled Transmission Solenoid
E 3 Engine Coolant Temp. Sensor

F 1 Front ABS Speed Sensor LH
F 2 Front ABS Speed Sensor RH
F 3 Front Turn Signal Light LH
F 4 Front Turn Signal Light RH
F 9 Front Airbag Sensor LH
F10 Front Airbag Sensor RH
F11 Fuse Box

G 1 Generator
G 2 Generator

H 1 Headlight LH
H 2 Headlight RH
H 5 Horn (High)
H10 Horn (Low)

Position of Parts in Engine Compartment

[3RZ–FE, 2RZ–FE]

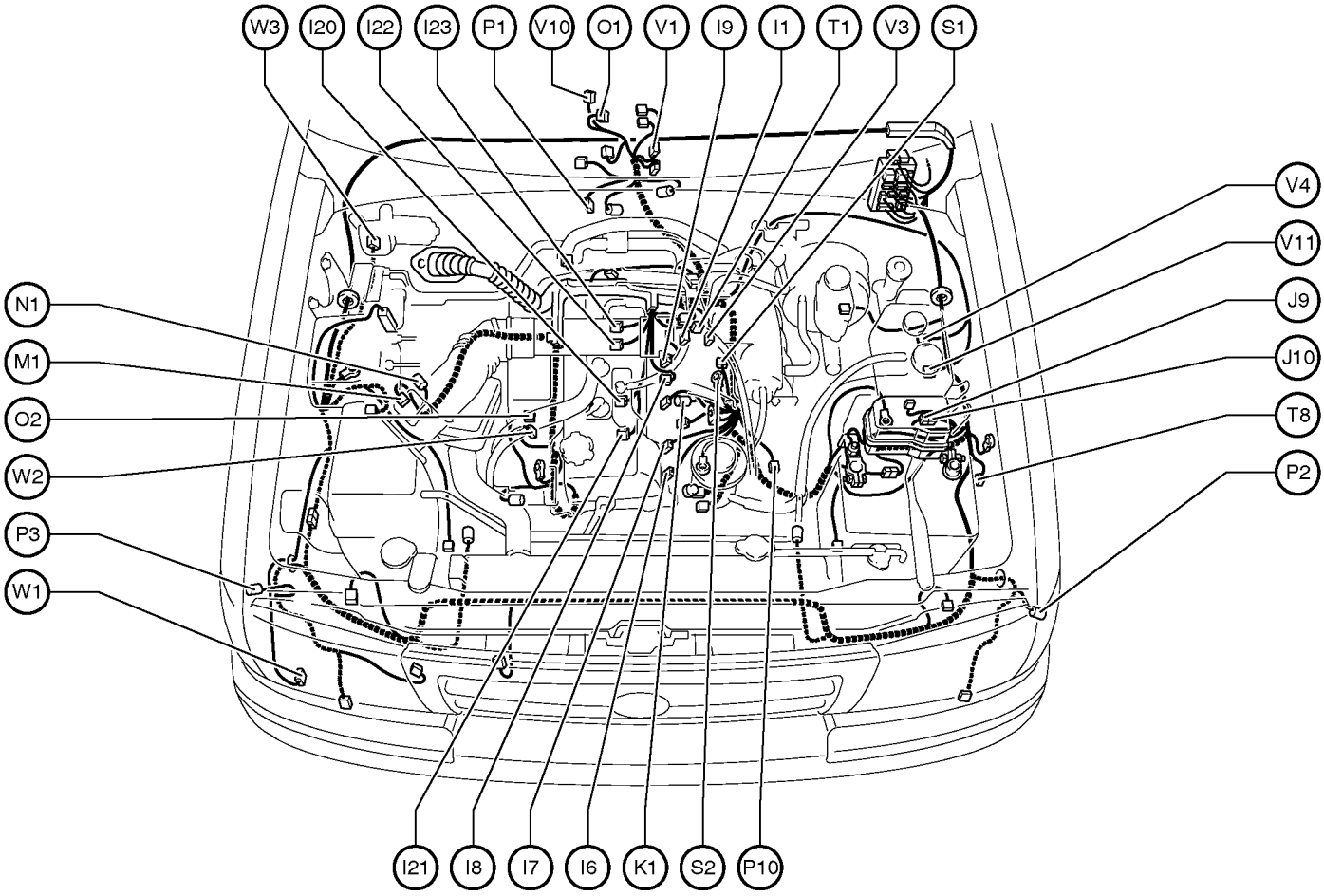

I 1 Idle Air Control Valve
I 6 Injector No.1
I 7 Injector No.2
I 8 Injector No.3
I 9 Injector No.4
I 20 Ignition Coil and Igniter No.1
I 21 Ignition Coil and Igniter No.2
I 22 Ignition Coil and Igniter No.3
I 23 Ignition Coil and Igniter No.4

J 9 Junction Connector
J 10 Junction Connector

K 1 Knock Sensor

M 1 Mass Air Flow Meter

N 1 Noise Filter (Ignition System)

O 1 O/D Solenoid
O 2 Oil Pressure SW

P 1 Park/Neutral Position SW
P 2 Parking Light LH
P 3 Parking Light RH
P 10 Power Steering Oil Pressure SW

S 1 Starter
S 2 Starter

T 1 Throttle Position Sensor
T 8 TVIP Warning Buzzer

V 1 Vehicle Speed Sensor (Electronically Controlled Transmission)
V 3 VSV (EGR)
V 4 VSV (EVAP)
V 10 Vehicle Speed Sensor
V 11 VSV (Canister Closed Valve)

W 1 Washer Motor and Washer Level Sensor (Cold Area Spec.) or Washer Motor (Except Cold Area Spec.)
W 2 Water Temp. Sender
W 3 Wiper Motor

Position of Parts in Instrument Panel

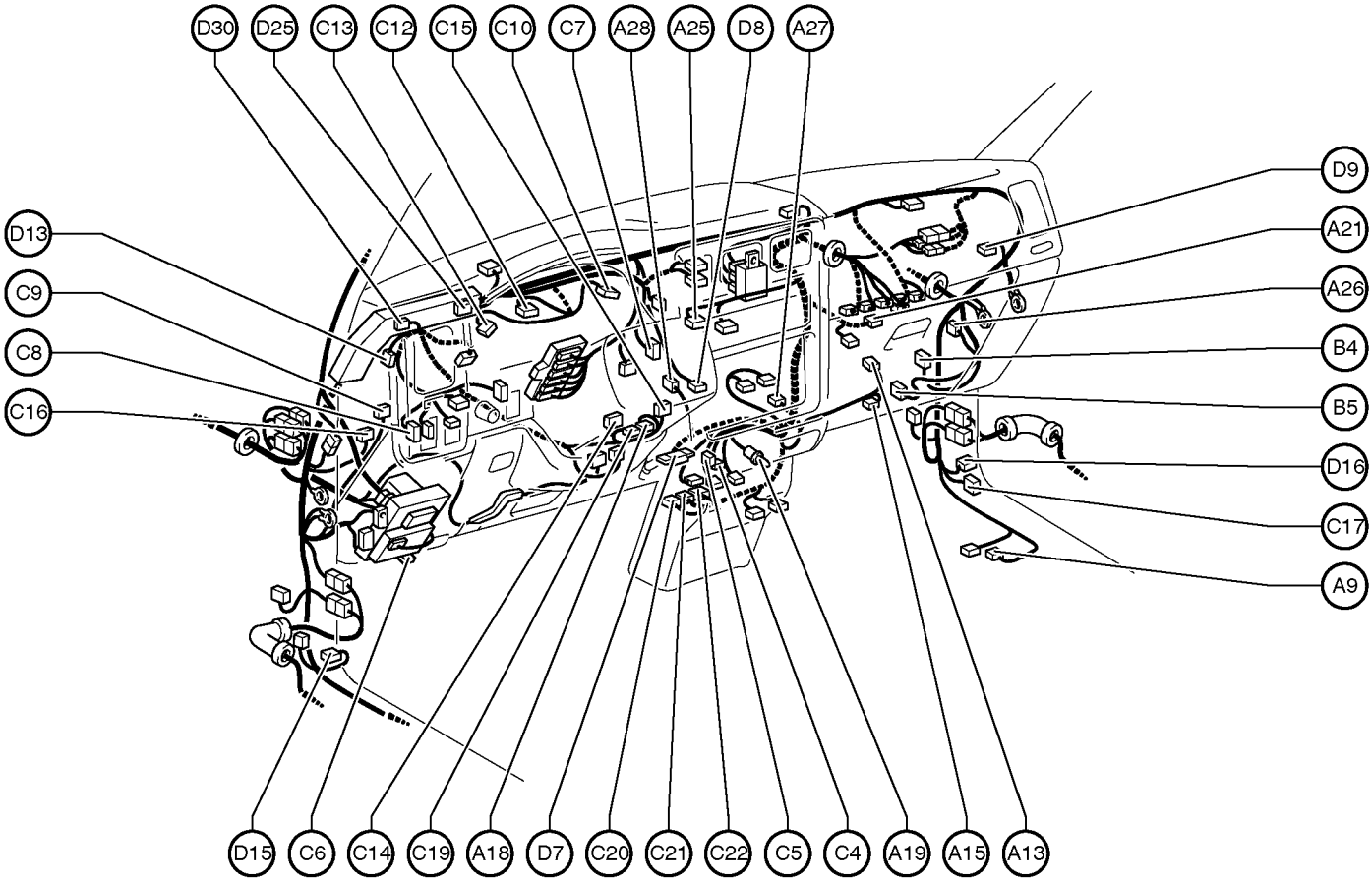

A 9 ABS Deceleration Sensor
A13 A/C Dual Pressure SW
A15 A/C Thermistor
A18 Airbag Squib (Steering Wheel Pad)
A19 Ashtray Illumination
A21 Airbag Squib (Front Passenger Airbag Assembly)
A25 A/C Control Assembly
A26 Air Inlet Control Servo Motor
A27 Air Mix Control Servo Motor
A28 Air Vent Mode Control Servo Motor

B 4 Blower Motor
B 5 Blower Resistor

C 4 Cigarette Lighter
C 5 Cigarette Lighter Illumination
C 6 Circuit Opening Relay
C 7 Clock
C 8 Clutch Start Cancel SW
C 9 Clutch Start SW
C10 Combination Meter
C12 Combination Meter
C13 Combination Meter
C14 Combination SW
C15 Combination SW
C16 Cruise Control Clutch SW
C17 Cruise Control ECU
C19 Combination SW
C20 Center Airbag Sensor Assembly
C21 Center Airbag Sensor Assembly
C22 Center Airbag Sensor Assembly

D 7 Data Link Connector 3
D 8 Daytime Running Light Relay (Main)
D 9 Daytime Running Light Relay No.4
D13 Diode (Daytime Running Light System)
D15 Door Courtesy SW Front LH
D16 Door Courtesy SW Front RH
D25 Diode (A/T)
D30 Diode (ABS)

Position of Parts in Instrument Panel

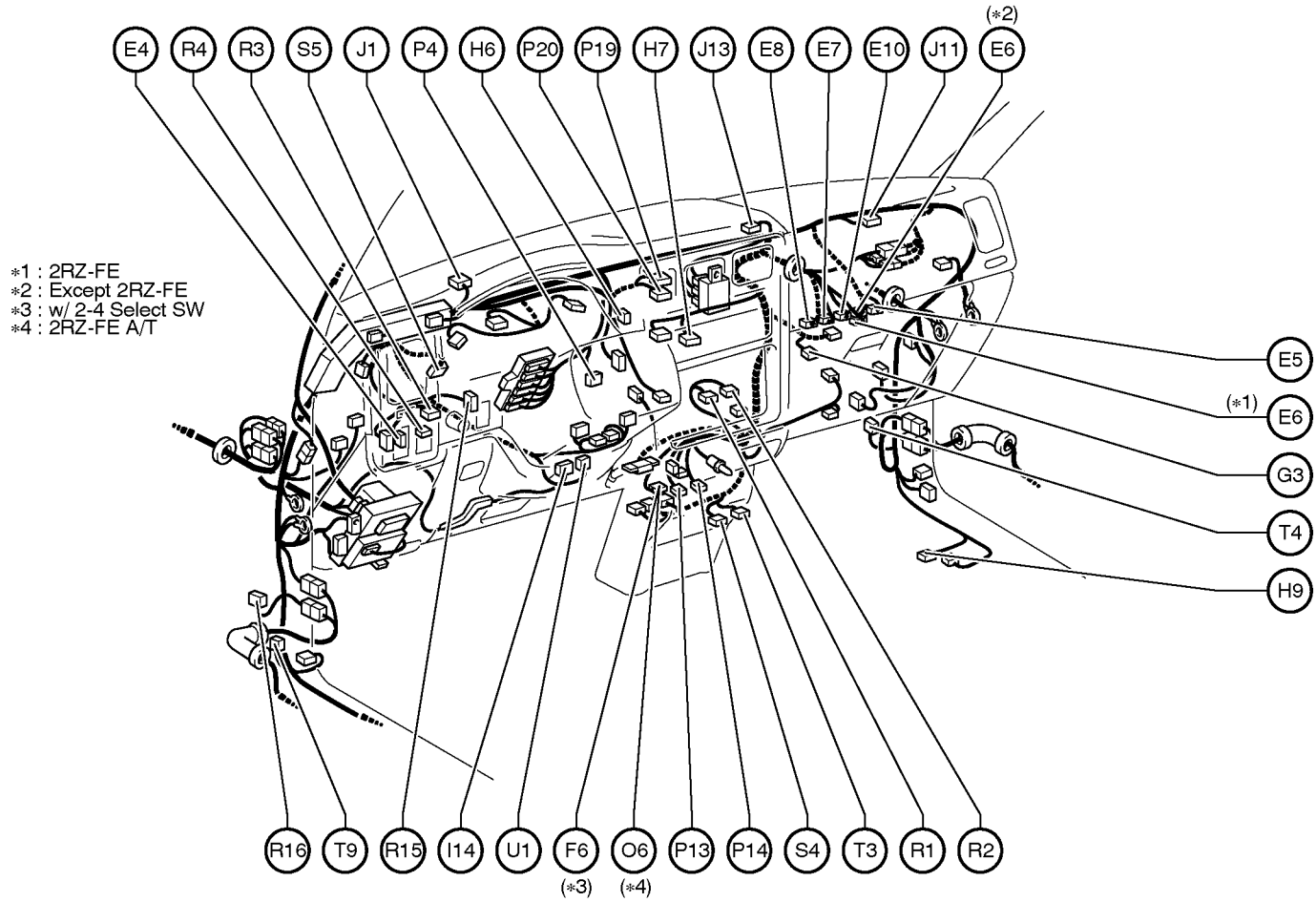

E 4 Electronically Controlled Transmission Pattern Select SW
E 5 Engine Control Module
E 6 Engine Control Module
E 7 Engine Control Module
E 8 Engine Control Module
E10 Engine Control Module

F 6 4WD ECU

G 3 Glove Box Light

H 6 Hazard SW
H 7 Heater Blower SW
H 9 Heated Oxygen Sensor (Bank 1 Sensor 2)

I 14 Ignition SW

J 1 Junction Connector
J 11 Junction Connector
J 13 Junction Connector

O 6 O/D ECU

P 4 Parking Brake SW
P13 Power Outlet
P14 Power Outlet
P19 Passenger Airbag Manual On/Off Indicator
P20 Passenger Airbag Manual On/Off SW

R 1 Radio and Player
R 2 Radio and Player
R 3 Rheostat
R 4 Rheostat
R15 Rear Diff. Lock SW
R16 Rear Diff. Lock ECU

S 4 Shift Lock Control Relay and O/D Main SW
S 5 Stop Light SW

T 3 2–4 Select SW
T 4 Transmission Control Relay
T 9 TVIP ECU

U 1 Unlock Warning SW

Position of Parts in Body

[Double Cab]

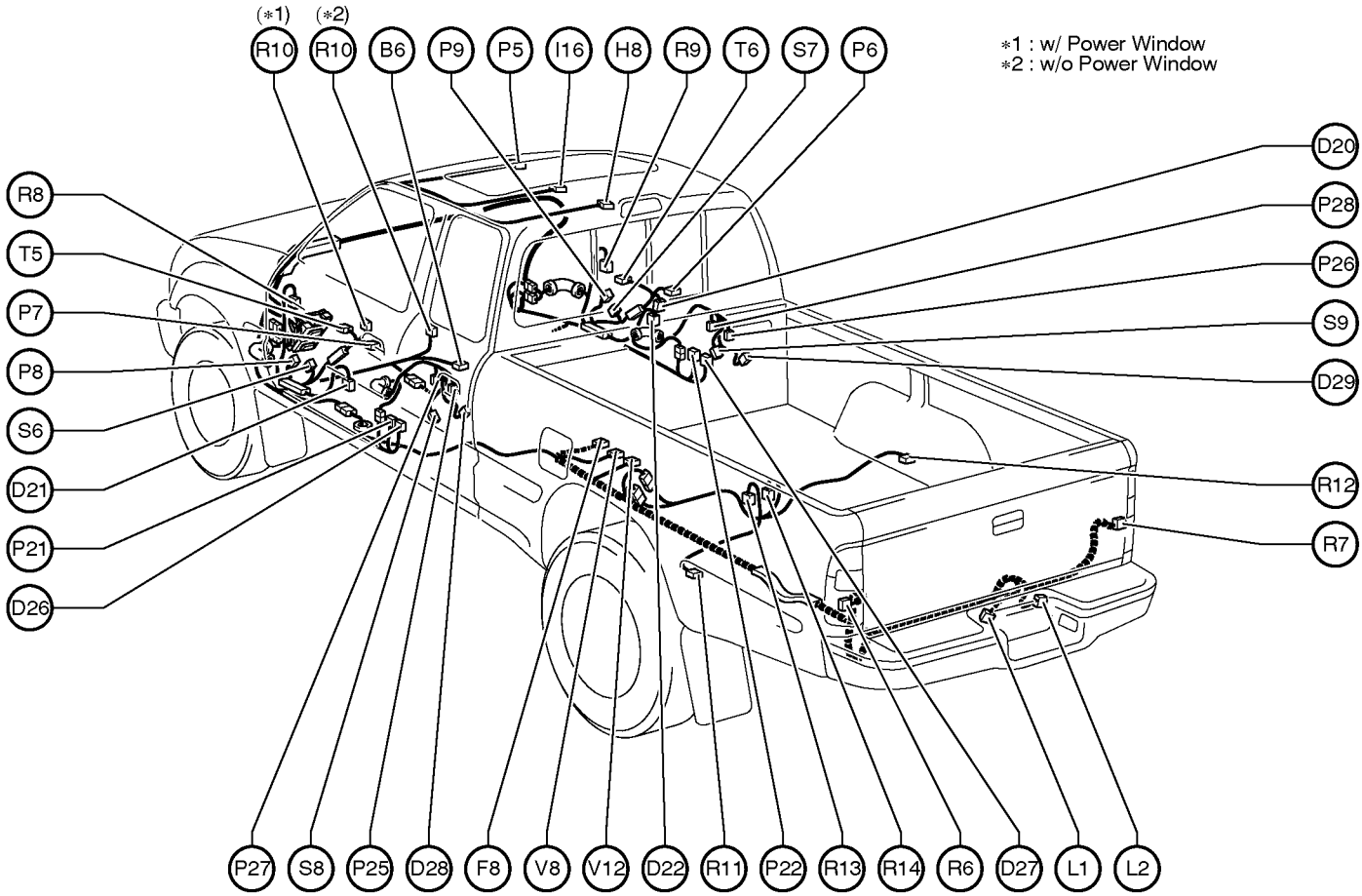

B 6 Buckle SW LH

D20 Door Lock Control SW RH
D21 Door Lock Motor, Door Unlock Detection SW and Door Key Lock and Unlock SW Front LH
D22 Door Lock Motor, Door Unlock Detection SW and Door Key Lock and Unlock SW Front RH
D26 Door Courtesy SW Rear LH
D27 Door Courtesy SW Rear RH
D28 Door Lock Motor Rear LH
D29 Door Lock Motor Rear RH

F 8 Fuel Pump and Sender

H 8 High Mounted Stop Light

I 16 Interior Light

L 1 License Plate Light LH
L 2 License Plate Light RH

P 5 Personal Light
P 6 Power Window Control SW Front RH
P 7 Power Window Master SW and Door Lock Control SW LH
P 8 Power Window Motor Front LH
P 9 Power Window Motor Front RH
P21 Pretensioner LH
P22 Pretensioner RH
P25 Power Window Control SW Rear LH
P26 Power Window Control SW Rear RH
P27 Power Window Motor Rear LH
P28 Power Window Motor Rear RH

R 6 Rear Combination Light LH
R 7 Rear Combination Light RH
R 8 Remote Control Mirror LH
R 9 Remote Control Mirror RH
R10 Remote Control Mirror SW
R11 Rear ABS Speed Sensor LH
R12 Rear ABS Speed Sensor RH
R13 Rear Diff. Lock Detection SW
R14 Rear Diff. Lock Motor

S 6 Speaker (Front Door LH)
S 7 Speaker (Front Door RH)
S 8 Speaker (Rear LH)
S 9 Speaker (Rear RH)

T 5 Tweeter LH
T 6 Tweeter RH

V 8 Vapor Pressure Sensor
V12 VSV (Pressure Switching Valve)

Position of Parts in Body

[Except Double Cab]

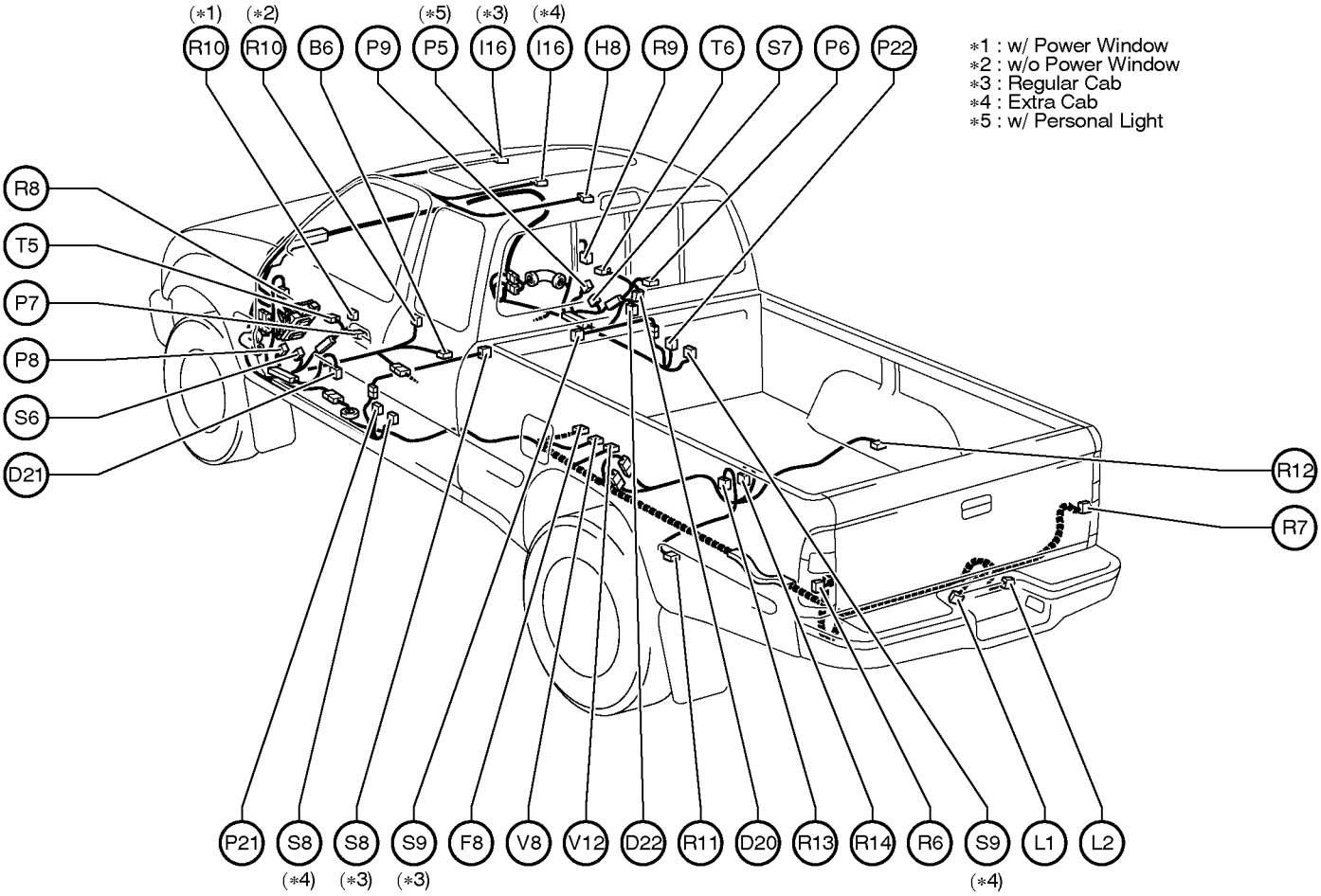

B 6 Buckle SW LH

D20 Door Lock Control SW RH
D21 Door Lock Motor, Door Unlock Detection SW and Door Key Lock and Unlock SW Front LH
D22 Door Lock Motor, Door Unlock Detection SW and Door Key Lock and Unlock SW Front RH

F 8 Fuel Pump and Sender

H 8 High Mounted Stop Light

I 16 Interior Light

L 1 License Plate Light LH
L 2 License Plate Light RH

P 5 Personal Light
P 6 Power Window Control SW Front RH
P 7 Power Window Master SW and Door Lock Control SW LH
P 8 Power Window Motor Front LH
P 9 Power Window Motor Front RH
P21 Pretensioner LH
P22 Pretensioner RH

R 6 Rear Combination Light LH
R 7 Rear Combination Light RH
R 8 Remote Control Mirror LH
R 9 Remote Control Mirror RH
R10 Remote Control Mirror SW
R11 Rear ABS Speed Sensor LH
R12 Rear ABS Speed Sensor RH
R13 Rear Diff. Lock Detection SW
R14 Rear Diff. Lock Motor

S 6 Speaker (Front Door LH)
S 7 Speaker (Front Door RH)
S 8 Speaker (Rear LH)
S 9 Speaker (Rear RH)

T 5 Tweeter LH
T 6 Tweeter RH

V 8 Vapor Pressure Sensor
V12 VSV (Pressure Switching Valve)

Position of Parts in Seat

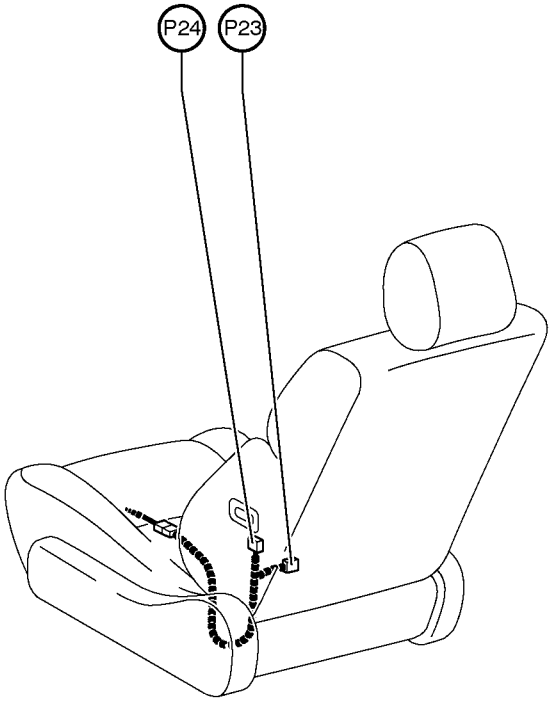

P23 Power Seat Motor (Lumbar Support)
P24 Power Seat SW (Lumbar Support)

E GLOSSARY OF TERMS AND SYMBOLS

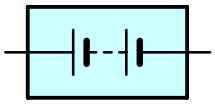

BATTERY
Stores chemical energy and converts it into electrical energy. Provides DC current for the auto's various electrical circuits.

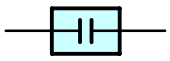

CAPACITOR (Condenser)
A small holding unit for temporary storage of electrical voltage.

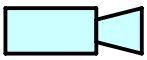

CIGARETTE LIGHTER
An electric resistance heating element.

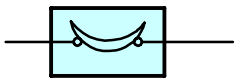

CIRCUIT BREAKER
Basically a reusable fuse, a circuit breaker will heat and open if too much current flows through it. Some units automatically reset when cool, others must be manually reset.



DIODE
A semiconductor which allows current flow in only one direction.



DIODE, ZENER
A diode which allows current flow in one direction but blocks reverse flow only up to a specific voltage. Above that potential, it passes the excess voltage. This acts as a simple voltage regulator.

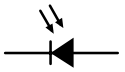

PHOTODIODE
The photodiode is a semiconductor which controls the current flow according to the amount of light.

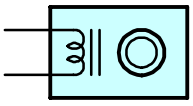

DISTRIBUTOR, IIA
Channels high–voltage current from the ignition coil to the individual spark plugs.

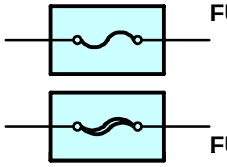

(for Medium Current Fuse)

(for High Current Fuse or Fusible Link)

FUSE
A thin metal strip which burns through when too much current flows through it, thereby stopping current flow and protecting a circuit from damage.

FUSIBLE LINK
A heavy–gauge wire placed in high amperage circuits which burns through on overloads, thereby protecting the circuit. The numbers indicate the crosssection surface area of the wires.



GROUND
The point at which wiring attaches to the Body, thereby providing a return path for an electrical circuit; without a ground, current cannot flow.

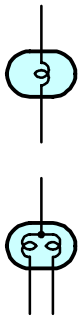

1. SINGLE FILAMENT

2. DOUBLE FILAMENT

HEADLIGHTS
Current flow causes a headlight filament to heat up and emit light. A headlight may have either a single (1) filament or a double (2) filament

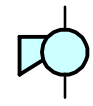

HORN
An electric device which sounds a loud audible signal.

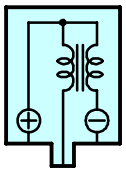

IGNITION COIL
Converts low–voltage DC current into high–voltage ignition current for firing the spark plugs.



LIGHT
Current flow through a filament causes the filament to heat up and emit light.



LED (LIGHT EMITTING DIODE)
Upon current flow, these diodes emit light without producing the heat of a comparable light.



METER, ANALOG
Current flow activates a magnetic coil which causes a needle to move, thereby providing a relative display against a background calibration.



METER, DIGITAL
Current flow activates one or many LED's, LCD's, or fluorescent displays, which provide a relative or digital display.



MOTOR
A power unit which converts electrical energy into mechanical energy, especially rotary motion.

RELAY

Basically, an electrically operated switch which may be normally closed (1) or open (2). Current flow through a small coil creates a magnetic field which either opens or closes an attached switch.

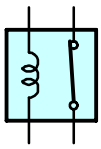

1. NORMALLY CLOSED

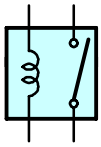

2. NORMALLY OPEN

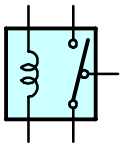

RELAY, DOUBLE THROW

A relay which passes current through one set of contacts or the other.

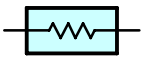

RESISTOR

An electrical component with a fixed resistance, placed in a circuit to reduce voltage to a specific value.

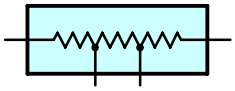

RESISTOR, TAPPED

A resistor which supplies two or more different non adjustable resistance values.



RESISTOR, VARIABLE or RHEOSTAT

A controllable resistor with a variable rate of resistance.
Also called a potentiometer or rheostat.

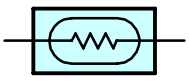

SENSOR (Thermistor)

A resistor which varies its resistance with temperature.

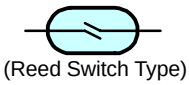

(Reed Switch Type)

SENSOR, SPEED

Uses magnetic impulses to open and close a switch to create a signal for activation of other components.

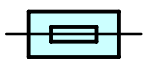

SHORT PIN

Used to provide an unbroken connection within a junction block.

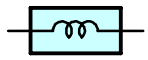

SOLENOID

An electromagnetic coil which forms a magnetic field when current flows, to move a plunger, etc.

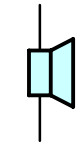

SPEAKER

An electromechanical device which creates sound waves from current flow.

SWITCH, MANUAL

Opens and closes circuits, thereby stopping (1) or allowing (2) current flow.

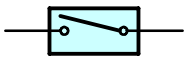

1. NORMALLY OPEN

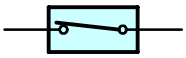

2. NORMALLY CLOSED

SWITCH, DOUBLE THROW

A switch which continuously passes current through one set of contacts or the other.

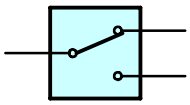

SWITCH, IGNITION

A key operated switch with several positions which allows various circuits, particularly the primary ignition circuit, to become operational.

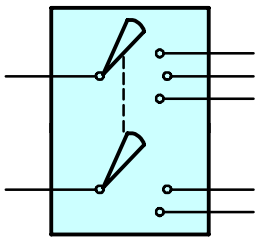

SWITCH, WIPER PARK

Automatically returns wipers to the stop position when the wiper switch is turned off.

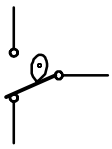

TRANSISTOR

A solidstate device typically used as an electronic relay; stops or passes current depending on the voltage applied at ”base”.

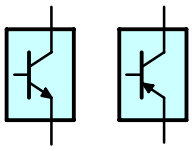

WIRES

Wires are always drawn as straight lines on wiring diagrams.
Crossed wires (1) without a black dot at the junction are not joined;
crossed wires (2) with a black dot or octagonal ( ) mark at the junction are spliced (joined) connections.

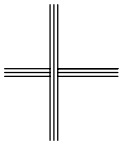

(1) NOT CONNECTED

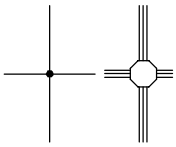

(2) SPLICED

I GROUND POINT

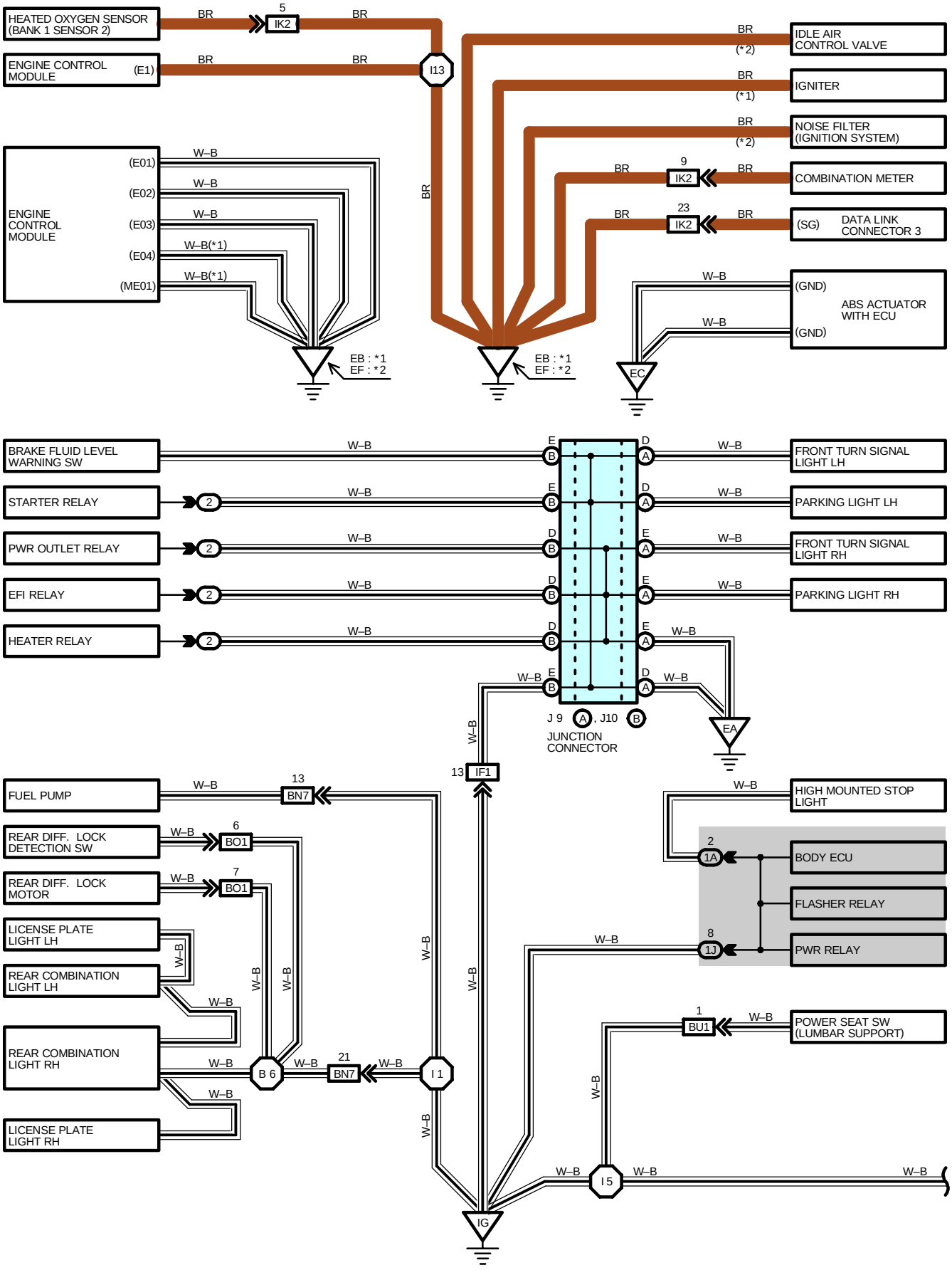

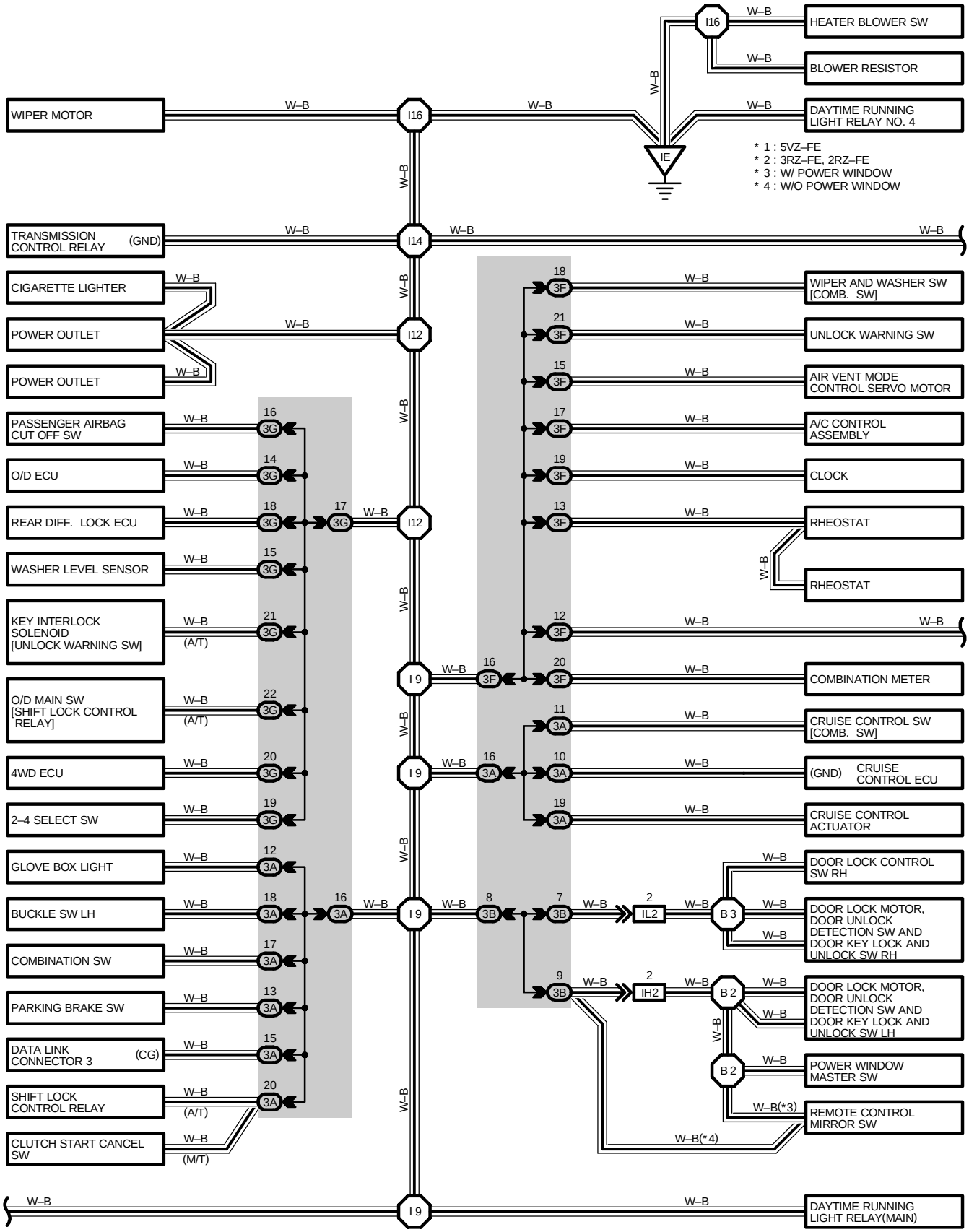
I16
W–B
HEATER BLOWER SW
BLOWER RESISTOR
DAYTIME RUNNING LIGHT RELAY NO. 4
WIPER MOTOR
IE
* 1 : 5VZ–FE
* 2 : 3RZ–FE, 2RZ–FE
* 3 : W/ POWER WINDOW
* 4 : W/O POWER WINDOW
TRANSMISSION CONTROL RELAY
(GND)
I14
CIGARETTE LIGHTER
POWER OUTLET
I12
WIPER AND WASHER SW [COMB. SW]
UNLOCK WARNING SW
AIR VENT MODE CONTROL SERVO MOTOR
A/C CONTROL ASSEMBLY
CLOCK
RHEOSTAT
PASSENGER AIRBAG CUT OFF SW
O/D ECU
REAR DIFF. LOCK ECU
WASHER LEVEL SENSOR
KEY INTERLOCK SOLENOID [UNLOCK WARNING SW]
(A/T)
O/D MAIN SW [SHIFT LOCK CONTROL RELAY]
4WD ECU
2–4 SELECT SW
I 9
COMBINATION METER
CRUISE CONTROL SW [COMB. SW]
(GND) CRUISE CONTROL ECU
CRUISE CONTROL ACTUATOR
GLOVE BOX LIGHT
BUCKLE SW LH
COMBINATION SW
PARKING BRAKE SW
DATA LINK CONNECTOR 3
(CG)
SHIFT LOCK CONTROL RELAY
CLUTCH START CANCEL SW
(M/T)
DOOR LOCK CONTROL SW RH
IL2
B 3
DOOR LOCK MOTOR, DOOR UNLOCK DETECTION SW AND DOOR KEY LOCK AND UNLOCK SW RH
IH2
B 2
DOOR LOCK MOTOR, DOOR UNLOCK DETECTION SW AND DOOR KEY LOCK AND UNLOCK SW LH
POWER WINDOW MASTER SW
W–B(*3)
REMOTE CONTROL MIRROR SW
W–B(*4)
DAYTIME RUNNING LIGHT RELAY(MAIN)

* 2 : 3RZ–FE, 2RZ–FE
* 5 : W/ 2–4 SELECT SW
* 6 : W/O 2–4 SELECT SW

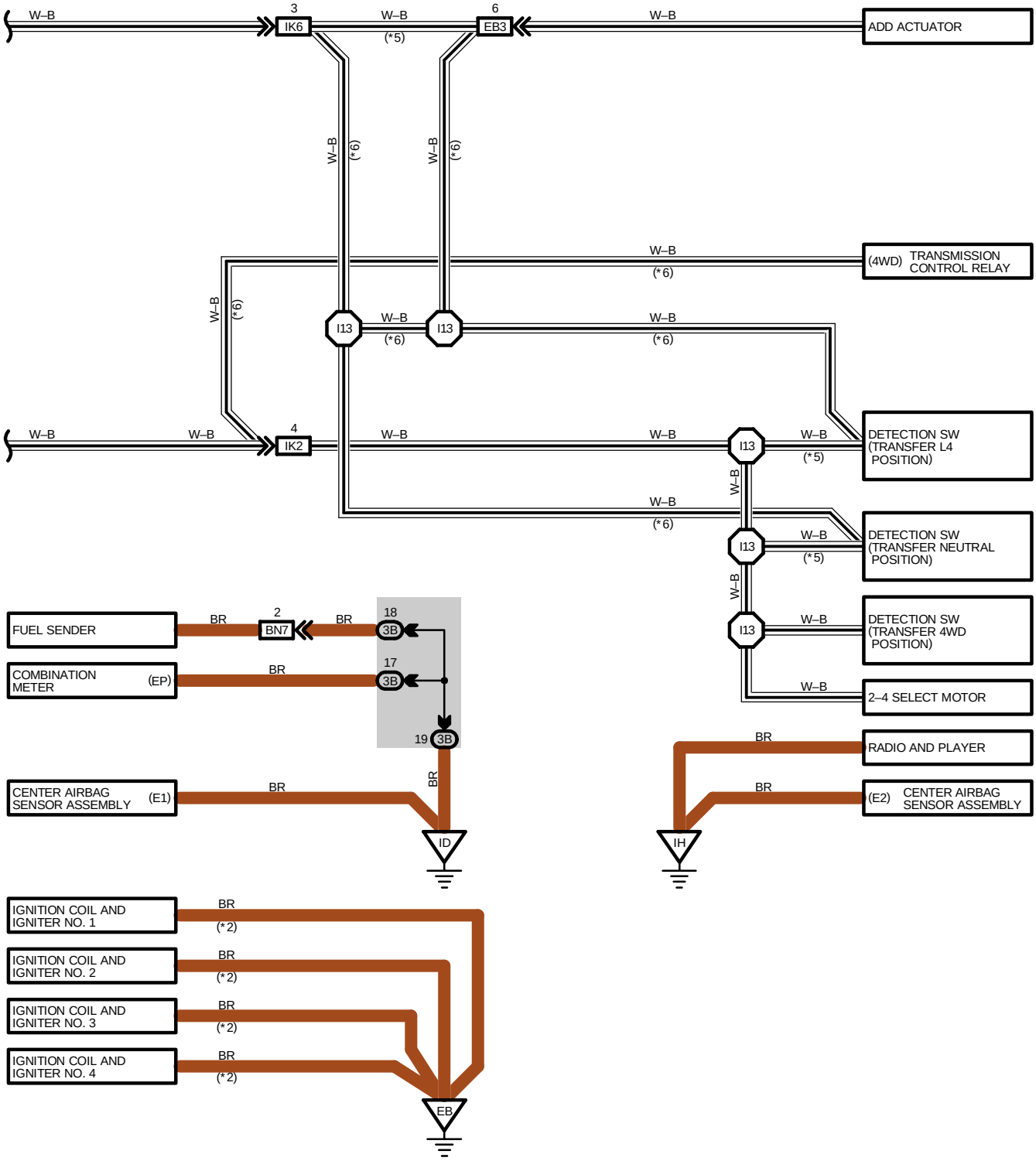

: PARTS LOCATION

Code		See Page	Code		See Page	Code	See Page
J9	A	33 (3RZ–FE, 2RZ–FE) 31 (5VZ–FE)	J10	B	33 (3RZ–FE, 2RZ–FE) 31 (5VZ–FE)		

: RELAY BLOCKS

Code	See Page	Relay Blocks (Relay Block Location)
2	21	R/B No.2 (Engine Compartment Left)

: JUNCTION BLOCK AND WIRE HARNESS CONNECTOR

Code	See Page	Junction Block and Wire Harness (Connector Location)
1A	23	Roof Wire and J/B No.1 (Lower Finish Panel)
1J	23	Cowl Wire and J/B No.1 (Lower Finish Panel)
3A	24	Cowl Wire and J/B No.3 (Behind the Instrument Panel Left)
3B		
3F		
3G	26	Cowl Wire and J/B No.3 (Behind the Instrument Panel Center)

: CONNECTOR JOINING WIRE HARNESS AND WIRE HARNESS

Code	See Page	Joining Wire Harness and Wire Harness (Connector Location)
EB3	40 (5VZ–FE) 42 (3RZ–FE, 2RZ–FE)	Engine Wire and Differential Wire (Front Differential Upper Side)
IF1	44	Engine Room Main Wire and Cowl Wire (Left Kick Panel)
IH2	44	Front Door LH Wire and Cowl Wire (Left Kick Panel)
IK2	44	Engine Wire and Cowl Wire (Above the Glove Box)
IK6		
IL2	44	Front Door RH Wire and Cowl Wire (Right Kick Panel)
BN7	46 (Double Cab) 48 (Except Double Cab)	Frame Wire and Cowl Wire (Under the Driver's Seat)
BO1	46 (Double Cab) 48 (Except Double Cab)	Frame Wire and Differential No.2 Wire (Rear Side Member LH)
BU1	50	Cowl Wire and Seat No.1 Wire (Under the Driver's Seat)

: GROUND POINTS

Code	See Page	Ground Points Location
EA	40 (5VZ–FE) 42 (3RZ–FE, 2RZ–FE)	Front Left Fender
EB	40 (5VZ–FE)	Near the Throttle Body
	42 (3RZ–FE, 2RZ–FE)	Under the Data Link Connector 1
EC	40 (5VZ–FE) 42 (3RZ–FE, 2RZ–FE)	Front Right Fender
EF	42 (3RZ–FE, 2RZ–FE)	Ignition Coil Braket
ID	44	Left Kick Panel
IE	44	Around the Right Edge of the Reinforcement
IG	44	Around the Left Edge of the Reinforcement
IH	44	Right Kick Panel

I GROUND POINT

: **SPLICE POINTS**

Code	See Page	Wire Harness with Splice Points	Code	See Page	Wire Harness with Splice Points
I1	44	Cowl Wire	B2	46 (Double Cab)	Front Door LH Wire
I5				48 (Except Double Cab)	
I9			B3	46 (Double Cab)	Front Door RH Wire
I12				48 (Except Double Cab)	
I13	44	Engine Wire	B6	46 (Double Cab)	Frame Wire
I14	44	Cowl Wire		48 (Except Double Cab)	
I16					

This manual provides information on the electrical circuits installed on vehicles by dividing them into a circuit for each system.

The actual wiring of each system circuit is shown from the point where the power source is received from the battery as far as each ground point. (All circuit diagrams are shown with the switches in the OFF position.)

When troubleshooting any problem, first understand the operation of the circuit where the problem was detected (see System Circuit section), the power source supplying power to that circuit (see Power Source section), and the ground points (see Ground Point section). See the System Outline to understand the circuit operation.

When the circuit operation is understood, begin troubleshooting of the problem circuit to isolate the cause. Use Relay Location and Electrical Wiring Routing sections to find each part, junction block and wiring harness connectors, wiring harness and wiring harness connectors, splice points, and ground points of each system circuit. Internal wiring for each junction block is also provided for better understanding of connection within a junction block.
Wiring related to each system is indicated in each system circuit by arrows (from__, to__). When overall connections are required, see the Overall Electrical Wiring Diagram at the end of this manual.

[A]

STOP LIGHT

* The system shown here is an EXAMPLE ONLY. It is different to the actual circuit shown in the SYSTEM CIRCUITS SECTION.

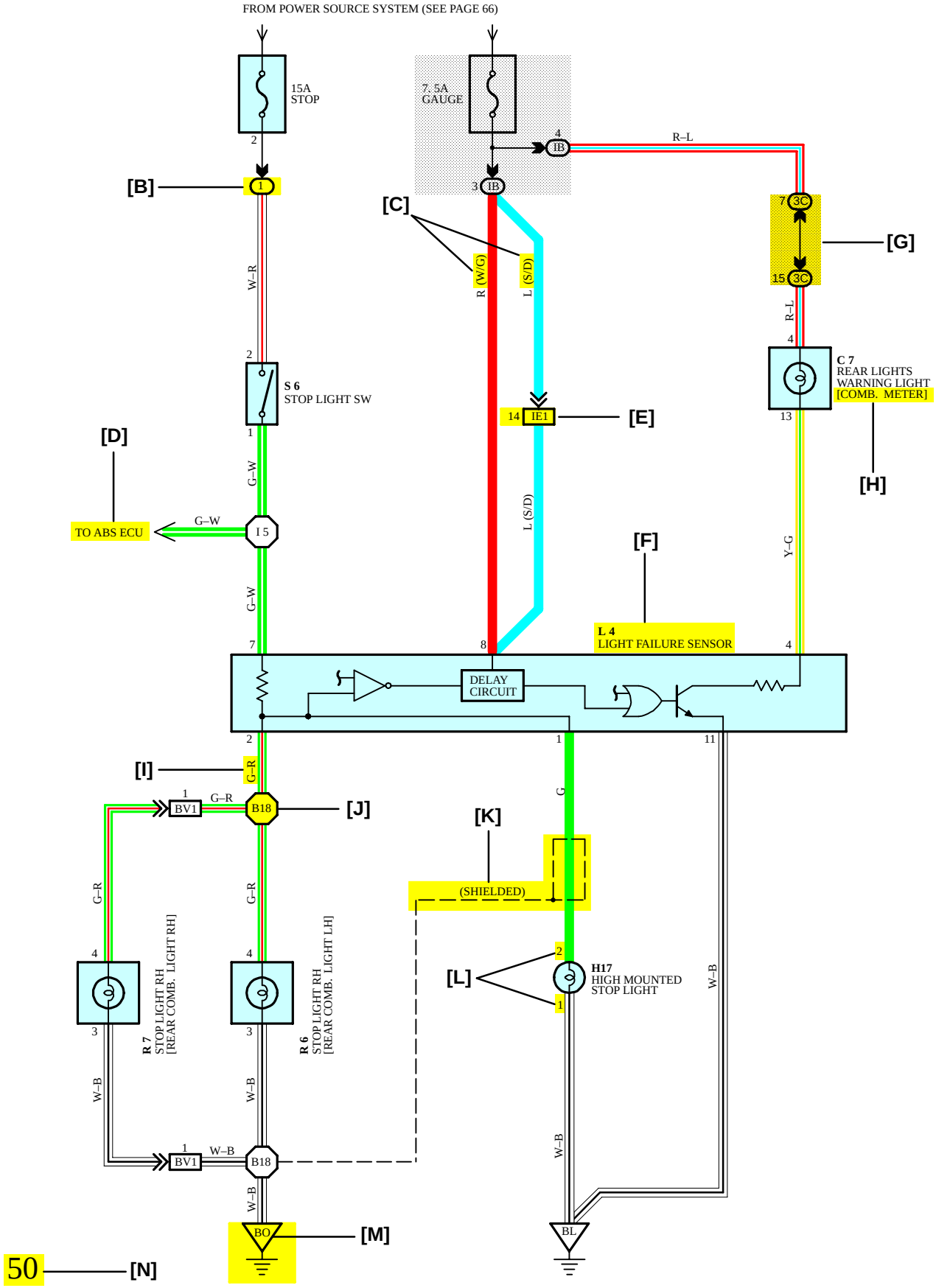

[A] : System Title

[B] : Indicates a Relay Block. No shading is used and only the Relay Block No. is shown to distinguish it from the J/B

Example: (1) Indicates Relay Block No.1

[C] : ( ) is used to indicate different wiring and connector, etc. when the vehicle model, engine type, or specification is different.

[D] : Indicates related system.

[E] : Indicates the wiring harness and wiring harness connector. The wiring harness with male terminal is shown with arrows (»).
Outside numerals are pin numbers.

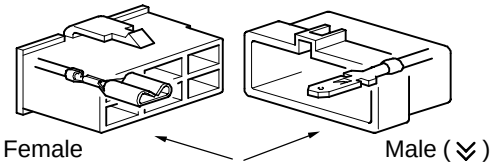

The first letter of the code for each wiring harness and wiring harness connector(s) indicates the component's location, e.g, "E" for the Engine Compartment, "I" for the Instrument Panel and Surrounding area, and "B" for the Body and Surrounding area.

When more than one code has the first and second letters in common, followed by numbers (e.g, IH1, IH2), this indicates the same type of wiring harness and wiring harness connector.

[F] : Represents a part (all parts are shown in sky blue). The code is the same as the code used in parts position.

[G] : Junction Block (The number in the circle is the J/B No. and the connector code is shown beside it). Junction Blocks are shaded to clearly separate them from other parts.

Example:

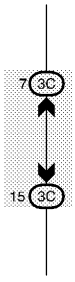

3C indicates that it is inside Junction Block No.3

[H] : When 2 parts both use one connector in common, the parts connector name used in the wire routing section is shown in square brackets [ ].

[I] : Indicates the wiring color.

Wire colors are indicated by an alphabetical code.

B	= Black	W	= White	BR	= Brown
L	= Blue	V	= Violet	SB	= Sky Blue
R	= Red	G	= Green	LG	= Light Green
P	= Pink	Y	= Yellow	GR	= Gray
O	= Orange				

The first letter indicates the basic wire color and the second letter indicates the color of the stripe.

Example: L – Y

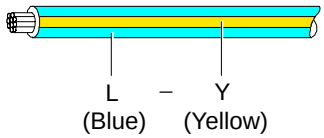

[J] : Indicates a wiring Splice Point (Codes are "E" for the Engine Room, "I" for the Instrument Panel, and "B" for the Body).

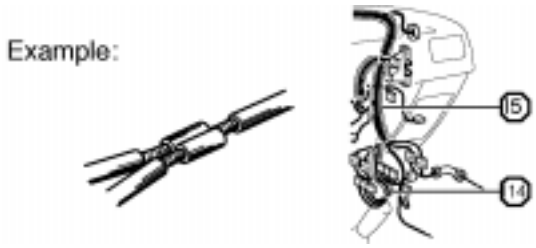

The Location of splice Point I 5 is indicated by the shaded section.

[K] : Indicates a shielded cable.

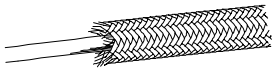

[L] : Indicates the pin number of the connector.
The numbering system is different for female and male connectors.

Example:

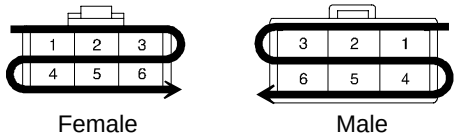

[M] : Indicates a ground point.

The first letter of the code for each ground point(s) indicates the component's location, e.g, "E" for the Engine Compartment, "I" for the Instrument Panel and Surrounding area, and "B" for the Body and Surrounding area.

[N] : Page No.

[O] **SYSTEM OUTLINE**

Current is applied at all times through the STOP fuse to TERMINAL 2 of the stop light SW.
When the ignition SW is turned on, current flows from the GAUGE fuse to TERMINAL 8 of the light failure sensor, and also flows through the rear lights warning light to TERMINAL 4 of the light failure sensor.

STOP LIGHT DISCONNECTION WARNING

When the ignition SW is turned on and the brake pedal is pressed (Stop light SW on), if the stop light circuit is open, the current flowing from TERMINAL 7 of the light failure sensor to TERMINALS 1, 2 changes, so the light failure sensor detects the disconnection and the warning circuit of the light failure sensor is activated.
As a result, the current flows from TERMINAL 4 of the light failure sensor to TERMINAL 11 to GROUND and turns the rear lights warning light on. By pressing the brake pedal, the current flowing to TERMINAL 8 of the light failure sensor keeps the warning circuit on and holds the warning light on until the ignition SW is turned off.

[P] **SERVICE HINTS**

S6 STOP LIGHT SW

2–1 : Closed with the brake pedal depressed

L4 LIGHT FAILURE SENSOR

1, 2, 7–GROUND : Approx. **12** volts with the stop light SW on
4, 8–GROUND : Approx. **12** volts with the ignition SW at **ON** position
11–GROUND : Always continuity

[Q] **: PARTS LOCATION**

Code	See Page	Code	See Page	Code	See Page
C7	34	L4	36	R7	37
H17	36	R6	37	S6	35

[R] **: RELAY BLOCKS**

Code	See Page	Relay Blocks (Relay Block Location)
1	18	R/B No.1 (Instrument Panel Left)

[S] **: JUNCTION BLOCK AND WIRE HARNESS CONNECTOR**

Code	See Page	Junction Block and Wire Harness (Connector Location)
IB	20	Instrument Panel Wire and Instrument Panel J/B (Lower Finish Panel)
3C	22	Instrument Panel Wire and J/B No.3 (Instrument Panel Left Side)

[T] **: CONNECTOR JOINING WIRE HARNESS AND WIRE HARNESS**

Code	See Page	Joining Wire Harness and Wire Harness (Connector Location)
IE1	42	Floor Wire and Instrument Panel Wire (Left Kick Panel)
BV1	50	Luggage Room Wire and Floor Wire (Luggage Compartment Left)

[U] **: GROUND POINTS**

Code	See Page	Ground Points Location
BL	50	Under the Left Quarter Pillar
BO	50	Back Panel Center

[V] **: SPLICE POINTS**

Code	See Page	Wire Harness with Splice Points	Code	See Page	Wire Harness with Splice Points
I5	44	Cowl Wire	B18	50	Luggage Room Wire

[O] : Explains the system outline.

[P] : Indicates values or explains the function for reference during troubleshooting.

[Q] : Indicates the reference page showing the position on the vehicle of the parts in the system circuit.

Example : Part ”L4” (Light Failure Sensor) is on page 36 of the manual.
∗ The letter in the code is from the first letter of the part, and the number indicates its order in parts starting with that letter.

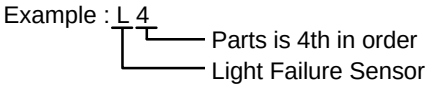

[R] : Indicates the reference page showing the position on the vehicle of Relay Block Connectors in the system circuit.

Example : Connector ”1” is described on page 18 of this manual and is installed on the left side of the instrument panel.

[S] : Indicates the reference page showing the position on the vehicle of J/B and Wire Harness in the system circuit.

Example : Connector ”3C” connects the Instrument Panel Wire and J/B No.3. It is described on page 22 of this manual, and is installed on the instrument panel left side.

[T] : Indicates the reference page describing the wiring harness and wiring harness connector (the female wiring harness is shown first, followed by the male wiring harness).

Example : Connector ”IE1” connects the floor wire (female) and Instrument panel wire (male). It is described on page 42 of this manual, and is installed on the left side kick panel.

[U] : Indicates the reference page showing the position of the ground points on the vehicle.

Example : Ground point ”BO” is described on page 50 of this manual and is installed on the back panel center.

[V] : Indicates the reference page showing the position of the splice points on the vehicle.

Example : Splice point ”I5” is on the Cowl Wire Harness and is described on page 44 of this manual.

B HOW TO USE THIS MANUAL

The ground points circuit diagram shows the connections from all major parts to the respective ground points. When troubleshooting a faulty ground point, checking the system circuits which use a common ground may help you identify the problem ground quickly. The relationship between ground points (EA, IB and IC shown below) can also be checked this way.

I GROUND POINT

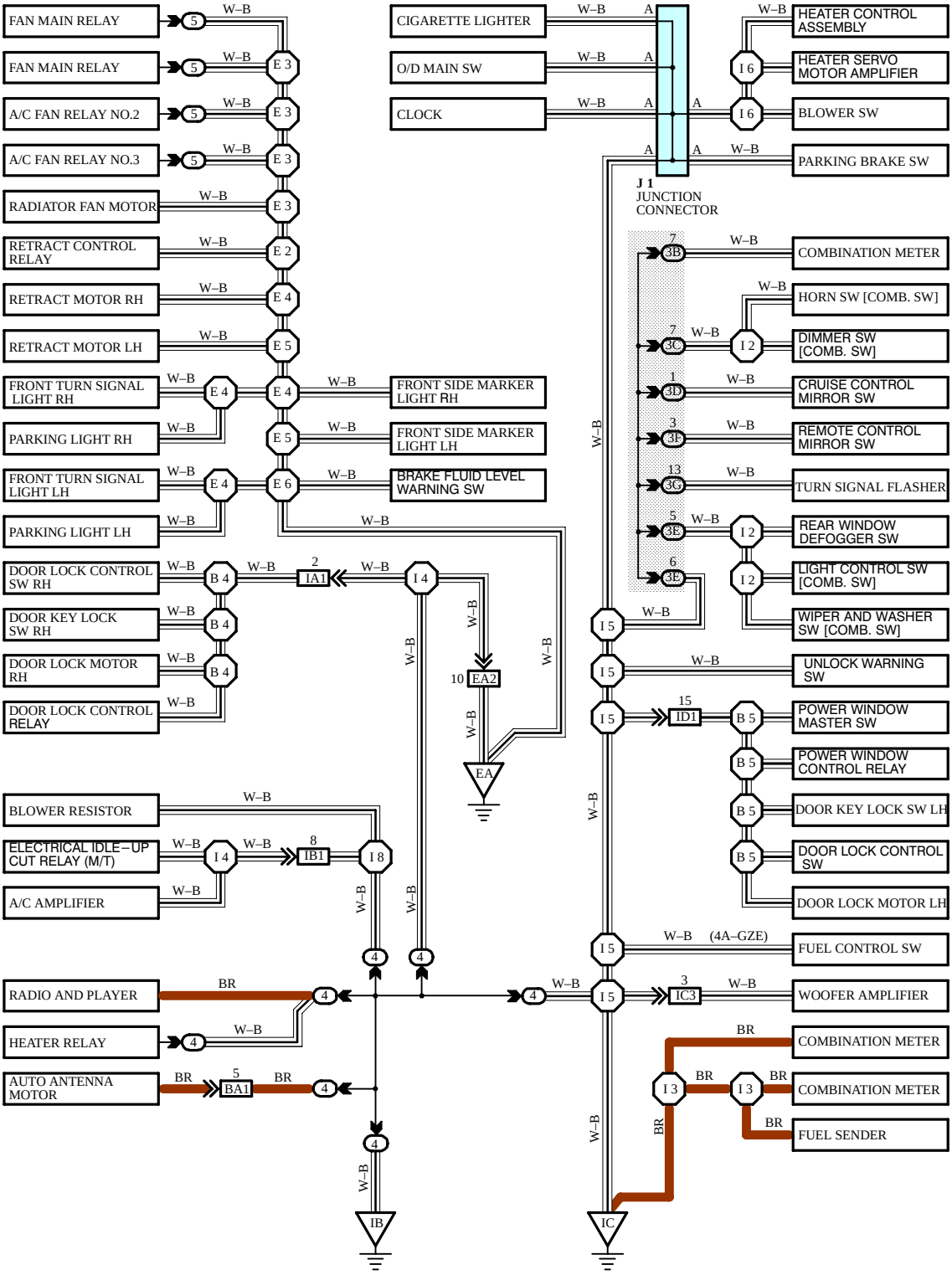

* The system shown here is an EXAMPLE ONLY. It is different to the actual circuit shown in the SYSTEM CIRCUITS SECTION.

The ”Current Flow Chart” section, describes which parts each power source (fuses, fusible links, and circuit breakers) transmits current to. In the Power Source circuit diagram, the conditions when battery power is supplied to each system are explained. Since all System Circuit diagrams start from the power source, the power source system must be fully understood.

J POWER SOURCE (Current Flow Chart)

The chart below shows the route by which current flows from the battery to each electrical source (Fusible Link, Circuit Breaker, Fuse, etc.) and other parts.

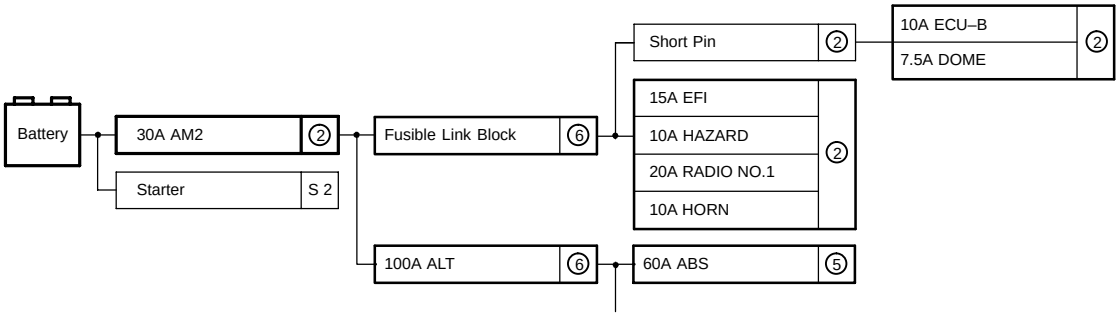

Engine Room R/B (See Page 20)

Fuse		System	Page
20A	STOP	ABS ABS and Traction Control Cruise Control Electronically Controlled Transmission and A/T Indicator Multiplex Communication System	194 187 180 166 210
10A	DOME	Cigarette Lighter and Clock Combination Meter Headlight Interior Light Key Reminder and Seat Belt Warning Light Auto Turn Off ft Deterrent and Door L...	214 230 112 122

POWER SOURCE

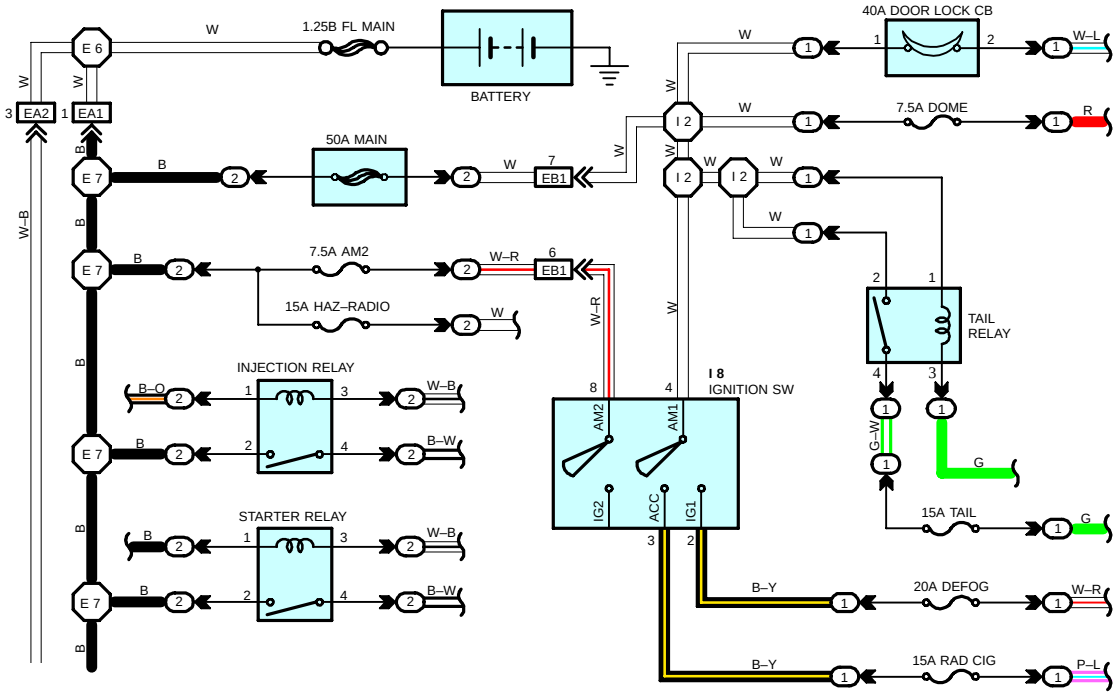

* The system shown here is an EXAMPLE ONLY. It is different to the actual circuit shown in the SYSTEM CIRCUITS SECTION.

K CONNECTOR LIST

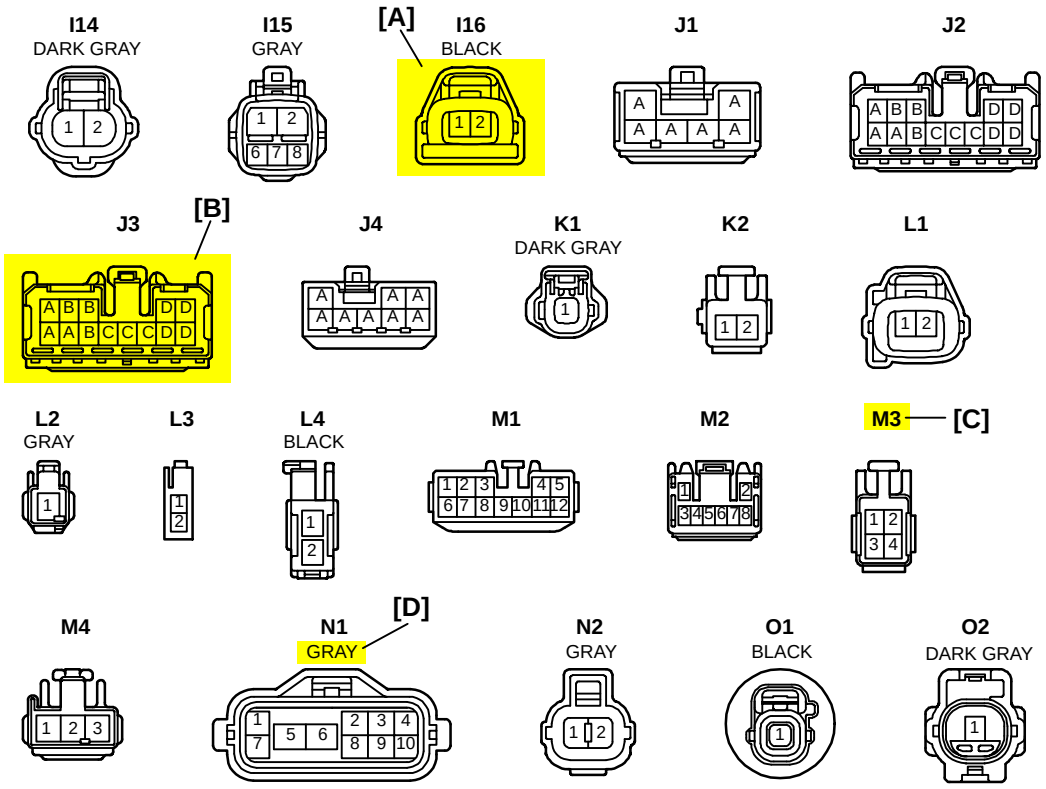

[A] : Indicates connector to be connected to a part. (The numeral indicates the pin No.)

[B] : Junction Connector
Indicates a connector which is connected to a short terminal.

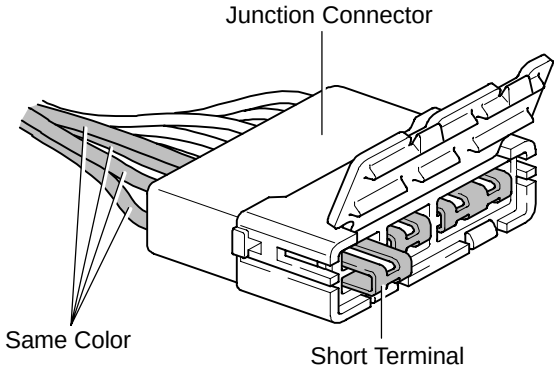

Junction connector in this manual include a short terminal which is connected to a number of wire harnesses. Always perform inspection with the short terminal installed. (When installing the wire harnesses, the harnesses can be connected to any position within the short terminal grouping. Accordingly, in other vehicles, the same position in the short terminal may be connected to a wire harness from a different part.)
Wire harness sharing the same short terminal grouping have the same color.

[C] : Parts Code
The first letter of the code is taken from the first letter of part, and the numbers indicates its order in parts which start with the same letter.

[D] : Connector Color
Connectors not indicated are milky white in color.

L PART NUMBER OF CONNECTORS

Code	Part Name	Part Number
A 1	A/C Ambient Temp. Sensor	90980–11070
A 2	A/C Condenser Fan Motor	90980–11237
A 3	A/C Condenser Fan Relay	90980–10940
A 4	A/C Triple Pressure SW (A/C Dual and Single Pressure SW)	90980–10943
[A]	A/T Oil Temp. Sensor [B]	909 [C] 413
A 6	ABS Actuator	90980–11151
A 7	ABS Actuator	90980–11009
A 8	ABS Speed Sensor Front LH	90980–10941
A 9	ABS Speed Sensor Front RH	90980–11002
A10	Airbag Sensor Front LH	90980–11856
A11	Airbag Sensor Front RH	
A12		90980–11194
		90980–11

Code	Part Name	Part Number
D 4	Diode (Door Courtesy Light)	90980–11608
D 5	Diode (Key Off Operation)	90980–10962
D 6	Diode (Luggage Compartment Light)	90980–11608
D 7	Door Lock Control Relay	90980–10848
D 8	Door Courtesy Light LH	90980–11148
D 9	Door Courtesy Light RH	
D10	Door Courtesy SW LH	90980–11097
D11	Door Courtesy SW RH	
D12	Door Courtesy SW Front LH	90980–11156
D13	Door Courtesy SW Front RH	
D14	Door Courtesy SW Rear LH	
D15	Door Courtesy SW Rear RH	
D16	nd Unlock SW LH	90980–11170
	RH	

[A] : Part Code

[B] : Part Name

[C] : Part Number
Toyota Part Number are indicated.

Not all of the above part numbers of the connector are established for the supply. In case of ordering a connector or terminal with wire, please confirm in advance if there is supply for it using “Parts Catalog News” (published by Parts Engineering Administration Dept.).

FOREWORD

This wiring diagram manual has been prepared to provide information on the electrical system of the 2003 TOYOTA TACOMA.

Applicable models: VZN150,170,195 Series
RZN140,150,161,
RZN171,191,196 Series

For service specifications and repair procedures of the above models other than those listed in this manual, refer to the following manuals;

Manual Name	Pub. No.
● 2003 TOYOTA TACOMA Repair Manual Volume 1	RM1002U1
Volume 2	RM1002U2
● 2003 TOYOTA New Car Features	NCF228U

All information in this manual is based on the latest product information at the time of publication. However, specifications and procedures are subject to change without notice.

TOYOTA MOTOR CORPORATION

NOTICE

When handling supplemental restraint system components (removal, installation or inspection, etc.), always follow the direction given in the repair manuals listed above to prevent accidents and supplemental restraint system malfunction.

2003 TOYOTA TACOMA ELECTRICAL WIRING DIAGRAM

	Section Code	Page
INTRODUCTION	A	2
HOW TO USE THIS MANUAL	B	3
TROUBLESHOOTING	C	12
ABBREVIATIONS	D	17
GLOSSARY OF TERMS AND SYMBOLS	E	18
RELAY LOCATIONS	F	20
ELECTRICAL WIRING ROUTING	G	30
SYSTEM CIRCUITS	H	53
GROUND POINT	I	224
POWER SOURCE (Current Flow Chart)	J	230
CONNECTOR LIST	K	236
PART NUMBER OF CONNECTORS	L	244
OVERALL ELECTRICAL WIRING DIAGRAM	M	248

©2002 TOYOTA MOTOR CORPORATION
All rights reserved. This book may not be reproduced or copied, in whole or in part, without the written permission of Toyota Motor Corporation.

A INTRODUCTION

This manual consists of the following 13 sections:

No.	Section	Description
A	INDEX	Index of the contents of this manual.
	INTRODUCTION	Brief explanation of each section.
B	HOW TO USE THIS MANUAL	Instructions on how to use this manual.
C	TROUBLE–SHOOTING	Describes the basic inspection procedures for electrical circuits.
D	ABBREVIATIONS	Defines the abbreviations used in this manual.
E	GLOSSARY OF TERMS AND SYMBOLS	Defines the symbols and functions of major parts.
F	RELAY LOCATIONS	Shows position of the Electronic Control Unit, Relays, Relay Block, etc. This section is closely related to the system circuit.
G	ELECTRICAL WIRING ROUTING	Describes position of Parts Connectors, Splice points, Ground points, etc. This section is closely related to the system circuit.
H	INDEX	Index of the system circuits.
	SYSTEM CIRCUITS	Electrical circuits of each system are shown from the power supply through ground points. Wiring connections and their positions are shown and classified by code according to the connection method. (Refer to the section, ”How to use this manual”). The ”System Outline” and ”Service Hints” useful for troubleshooting are also contained in this section.
I	GROUND POINT	Shows ground positions of all parts described in this manual.
J	POWER SOURCE (Current Flow Chart)	Describes power distribution from the power supply to various electrical loads.
K	CONNECTOR LIST	Describes the form of the connectors for the parts appeared in this book. This section is closely related to the system circuit.
L	PART NUMBER OF CONNECTORS	Indicates the part number of the connectors used in this manual.
M	OVERALL ELECTRICAL WIRING DIAGRAM	Provides circuit diagrams showing the circuit connections.

1 TOYOTA TACOMA ELECTRICAL WIRING DIAGRAM

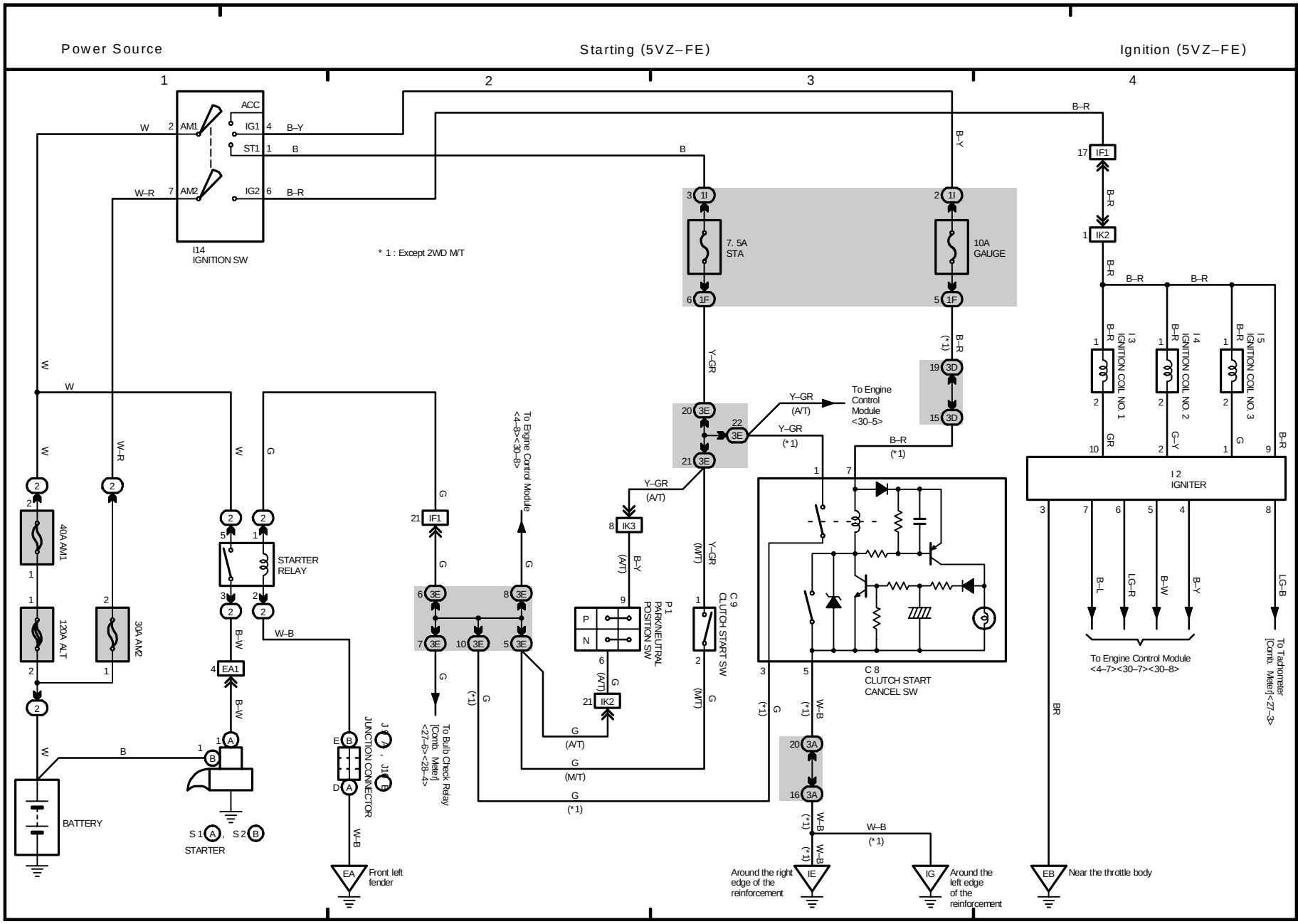

M OVERALL ELECTRICAL WIRING DIAGRAM

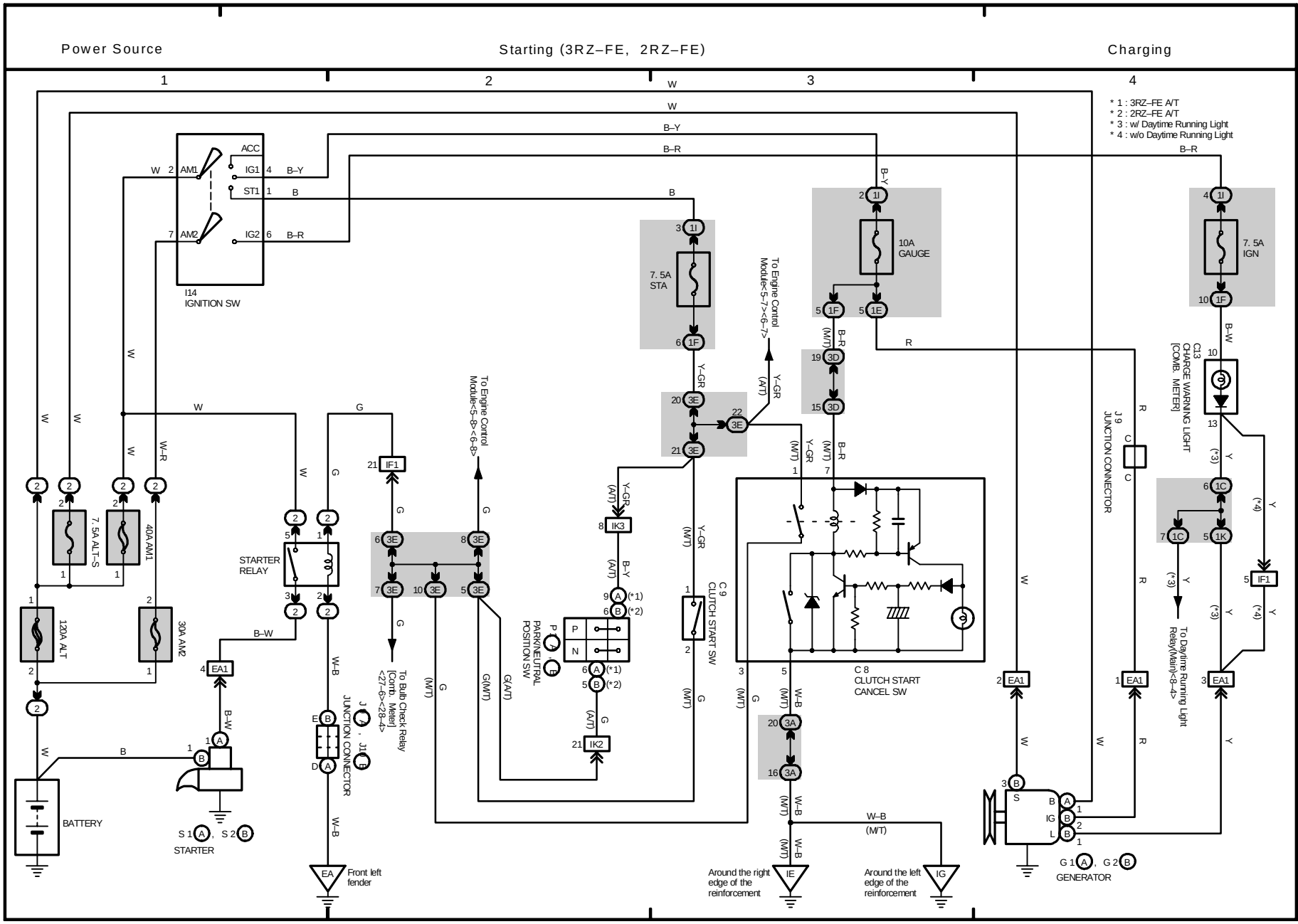
Power Source
Starting (3RZ–FE, 2RZ–FE)
Charging
1
2
3
4
* 1 : 3RZ–FE A/T
* 2 : 2RZ–FE A/T
* 3 : w/ Daytime Running Light
* 4 : w/o Daytime Running Light
I14
IGNITION SW
ACC
IG1
ST1
IG2
AM1
AM2
7. 5A STA
10A GAUGE
7. 5A IGN
7. 5A ALT–S
40A AM1
120A ALT
30A AM2
STARTER RELAY
BATTERY
STARTER
S 1 , S 2
EA1
EA
Front left fender
JUNCTION CONNECTOR
J 7 , J 8
To Bulb Check Relay [Comb. Meter] <27–6><28–4>
To Engine Control Module<5–8><6–8>
To Engine Control Module<5–7><6–7>
IF1
IK3
IK2
PARK/NEUTRAL POSITION SW
C 9
CLUTCH START SW
C 8
CLUTCH START CANCEL SW
Around the right edge of the reinforcement
IE
Around the left edge of the reinforcement
IG
J 9
JUNCTION CONNECTOR
C13
CHARGE WARNING LIGHT [COMB. METER]
To Daytime Running Light Relay(Main)<8–4>
G 1 , G 2
GENERATOR
(*1)
(*2)
(*3)
(*4)
(A/T)
(M/T)

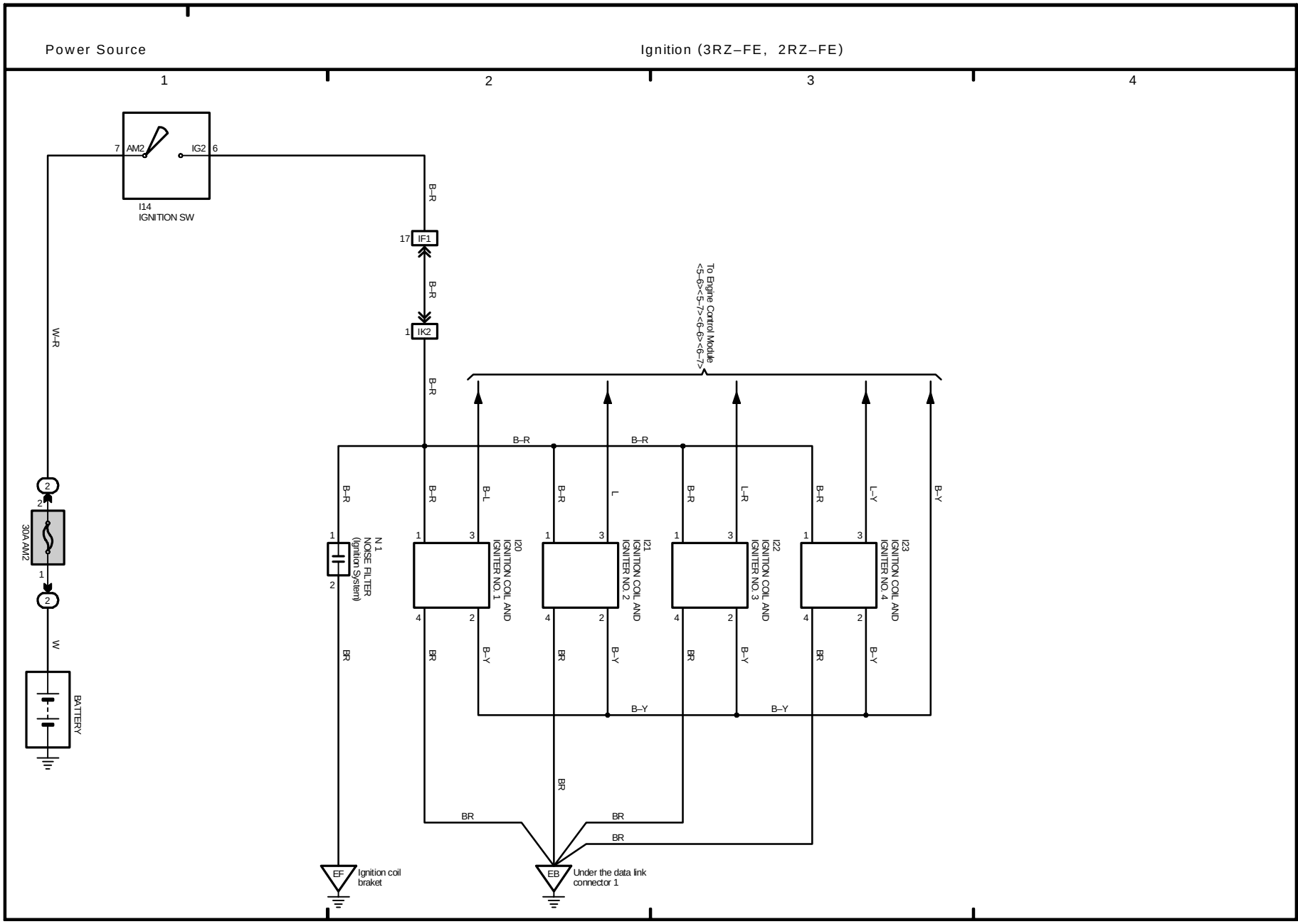
Power Source
Ignition (3RZ–FE, 2RZ–FE)
1
2
3
4
7 AM2
IG2 6
I14
IGNITION SW
17 IF1
1 IK2
To Engine Control Module
<5–6><5–7><6–6><6–7>
W–R
B–R
B–L
L
L–R
L–Y
B–Y
BR
W
2
1
30A AM2
BATTERY
N.1
NOISE FILTER
(Ignition System)
I20
IGNITION COIL AND
IGNITER NO.1
I21
IGNITION COIL AND
IGNITER NO.2
I22
IGNITION COIL AND
IGNITER NO.3
I23
IGNITION COIL AND
IGNITER NO.4
EF
Ignition coil
braket
EB
Under the data link
connector 1

M OVERALL ELECTRICAL WIRING DIAGRAM

(Cont. next page)

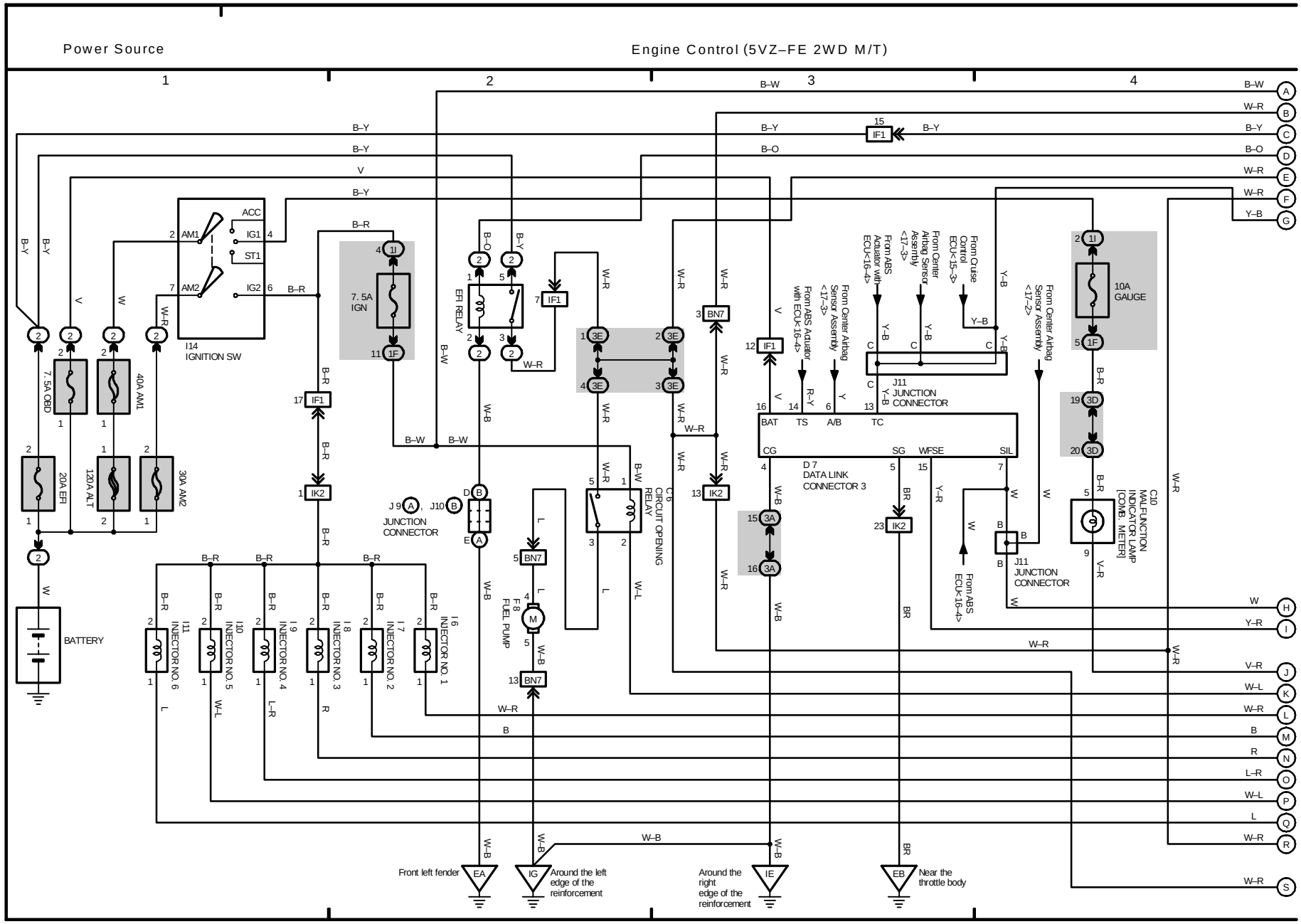

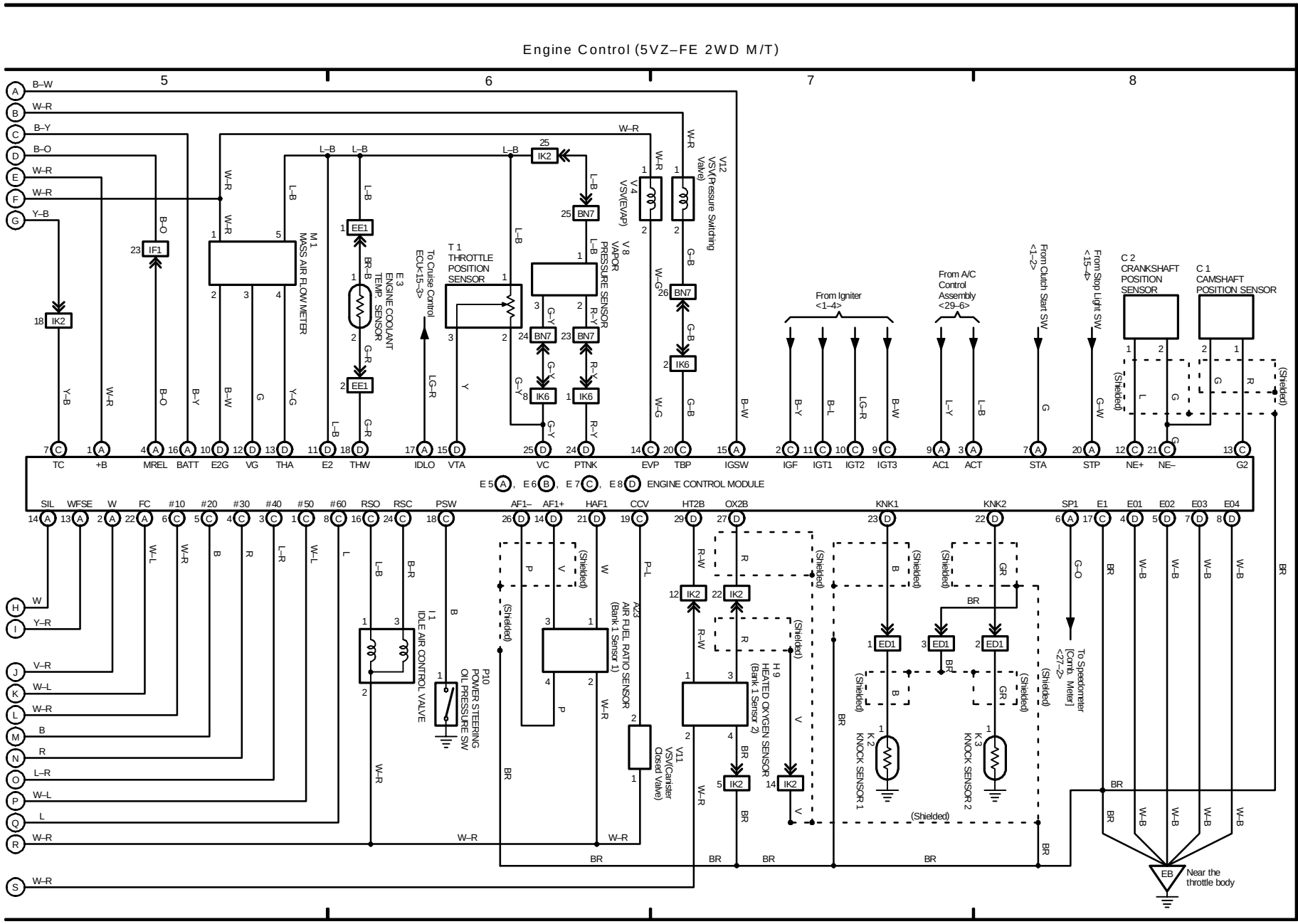
Engine Control (5VZ–FE 2WD M/T)
5
6
7
8
M 1 MASS AIR FLOW METER
E 3 ENGINE COOLANT TEMP. SENSOR
T 1 THROTTLE POSITION SENSOR
To Cruise Control ECU<15–3>
V 8 VAPOR PRESSURE SENSOR
V 4 VSV(EVAP)
V12 VSV(Pressure Switching Valve)
From Igniter <1–4>
From A/C Control Assembly <29–6>
From Clutch Start SW <1–2>
From Stop Light SW <15–4>
C 2 CRANKSHAFT POSITION SENSOR
C 1 CAMSHAFT POSITION SENSOR
TC +B MREL BATT E2G VG THA E2 THW IDLO VTA VC PTNK EVP TBP IGSW IGF IGT1 IGT2 IGT3 AC1 ACT STA STP NE+ NE– G2
E 5 (A), E 6 (B), E 7 (C), E 8 (D) ENGINE CONTROL MODULE
SIL WFSE W FC #10 #20 #30 #40 #50 #60 RSO RSC PSW AF1– AF1+ HAF1 CCV HT2B OX2B KNK1 KNK2 SP1 E1 E01 E02 E03 E04
I 1 IDLE AIR CONTROL VALVE
P10 POWER STEERING OIL PRESSURE SW
A23 AIR FUEL RATIO SENSOR (Bank 1 Sensor 1)
H 9 HEATED OXYGEN SENSOR (Bank 1 Sensor 2)
V11 VSV(Canister Closed Valve)
K 2 KNOCK SENSOR 1
K 3 KNOCK SENSOR 2
To Speedometer [Comb. Meter] <27–2>
EB Near the throttle body
(Shielded)

M OVERALL ELECTRICAL WIRING DIAGRAM

(Cont. next page)

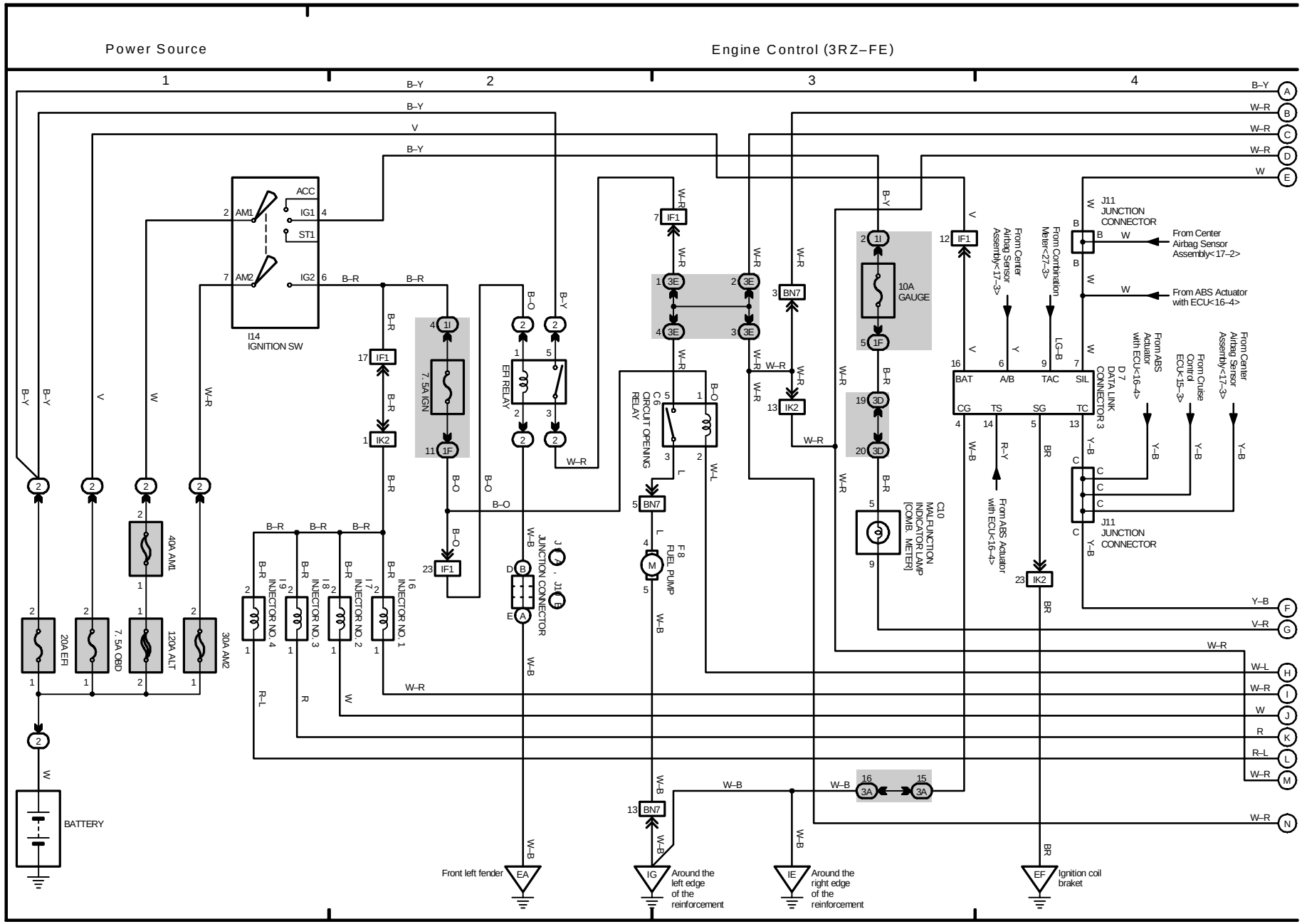

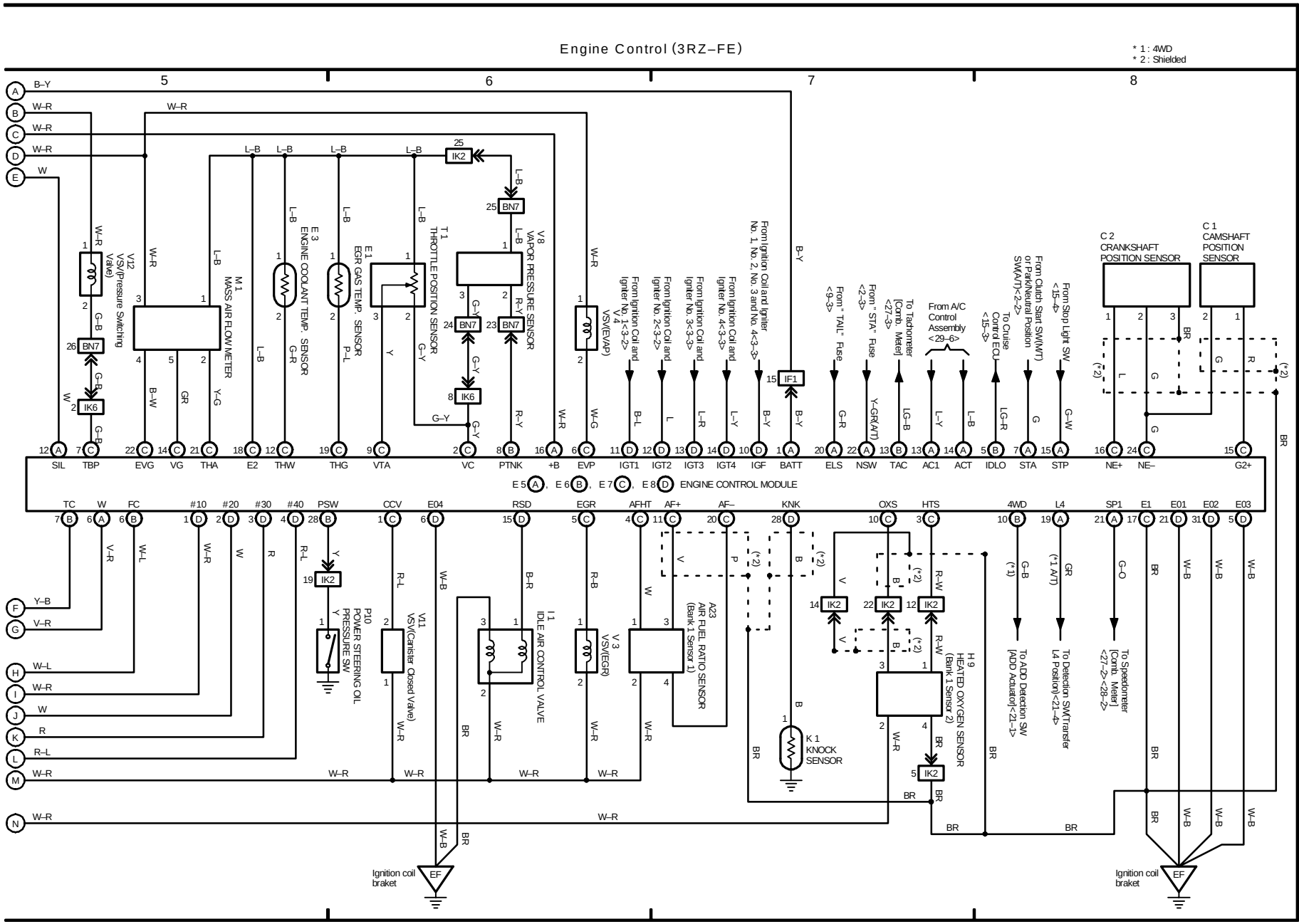
Engine Control (3RZ–FE)
* 1 : 4WD
* 2 : Shielded
5
6
7
8
SIL
TBP
EVG
VG
THA
E2
THW
THG
VTA
VC
PTNK
+B
EVP
IGT1
IGT2
IGT3
IGT4
IGF
BATT
ELS
NSW
TAC
AC1
ACT
IDLO
STA
STP
NE+
NE–
G2+
E5 (A), E6 (B), E7 (C), E8 (D) ENGINE CONTROL MODULE
TC
W
FC
#10
#20
#30
#40
PSW
CCV
E04
RSD
EGR
AFHT
AF+
AF–
KNK
OXS
HTS
4WD
L4
SP1
E1
E01
E02
E03
V12 VSV(Pressure Switching Valve)
M1 MASS AIR FLOW METER
E3 ENGINE COOLANT TEMP. SENSOR
E1 EGR GAS TEMP. SENSOR
T1 THROTTLE POSITION SENSOR
V8 VAPOR PRESSURE SENSOR
V4 VSV(EVAP)
From Ignition Coil and Igniter No. 1, No. 2, No. 3 and No. 4<3–3>
From Ignition Coil and Igniter No. 1<3–2>
From Ignition Coil and Igniter No. 2<3–2>
From Ignition Coil and Igniter No. 3<3–3>
From Ignition Coil and Igniter No. 4<3–3>
From "TAIL" Fuse <9–3>
From "STA" Fuse <2–3>
To Tachometer [Comb. Meter] <27–3>
From A/C Control Assembly <29–6>
To Cruise Control ECU <15–3>
From Clutch Start SW(M/T) or Park/Neutral Position SW(A/T)<2–2>
From Stop Light SW <15–4>
C2 CRANKSHAFT POSITION SENSOR
C1 CAMSHAFT POSITION SENSOR
P10 POWER STEERING OIL PRESSURE SW
V11 VSV(Canister Closed Valve)
I1 IDLE AIR CONTROL VALVE
V3 VSV(EGR)
A23 AIR FUEL RATIO SENSOR (Bank 1, Sensor 1)
K1 KNOCK SENSOR
H9 HEATED OXYGEN SENSOR (Bank 1 Sensor 2)
To ADD Detection SW [ADD Actuator]<21–1>
To Detection SMT(ransfer L4 Position)<21–4>
To Speedometer [Comb. Meter] <27–2><28–2>
Ignition coil braket
EF

M OVERALL ELECTRICAL WIRING DIAGRAM

(Cont. next page)

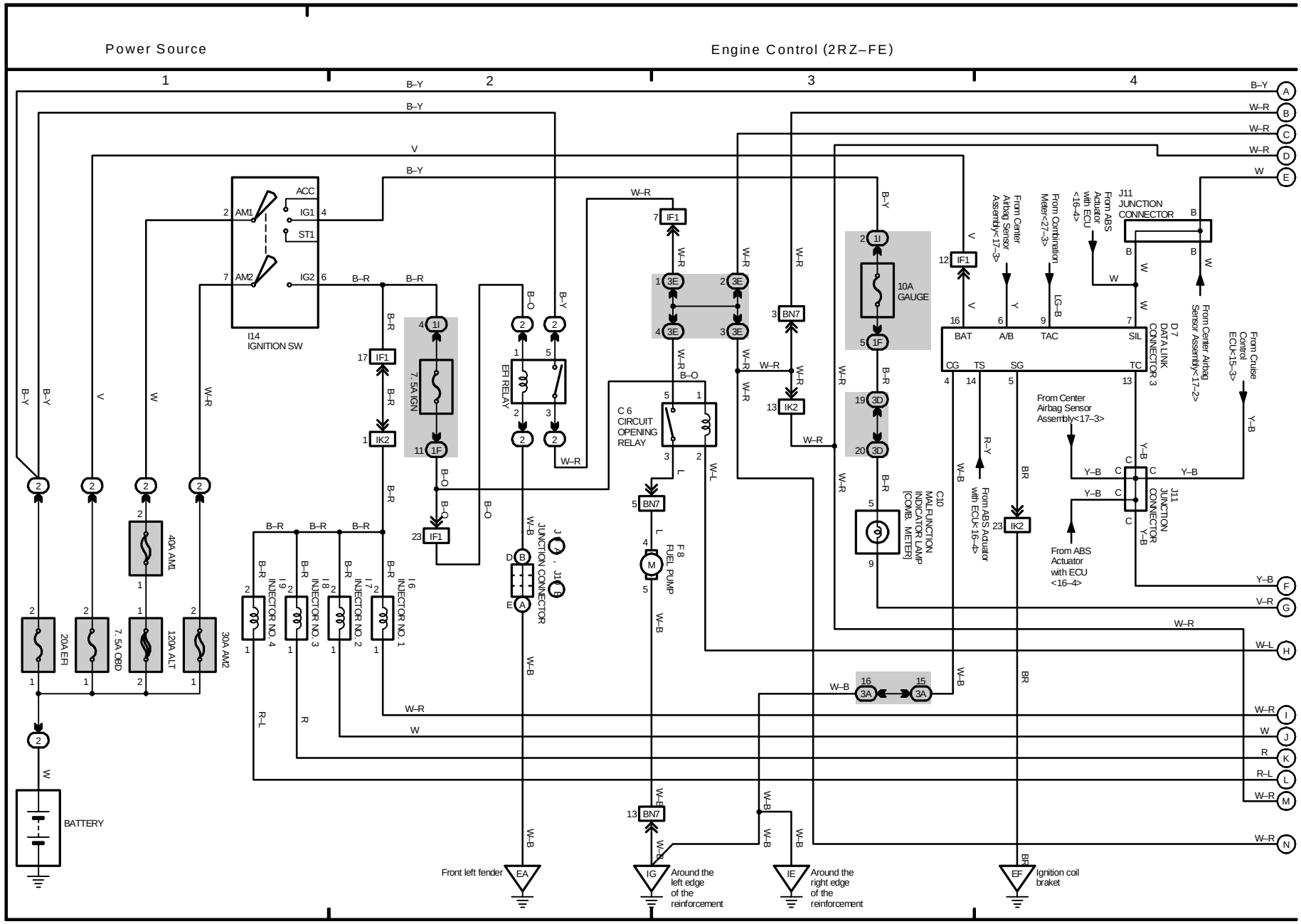

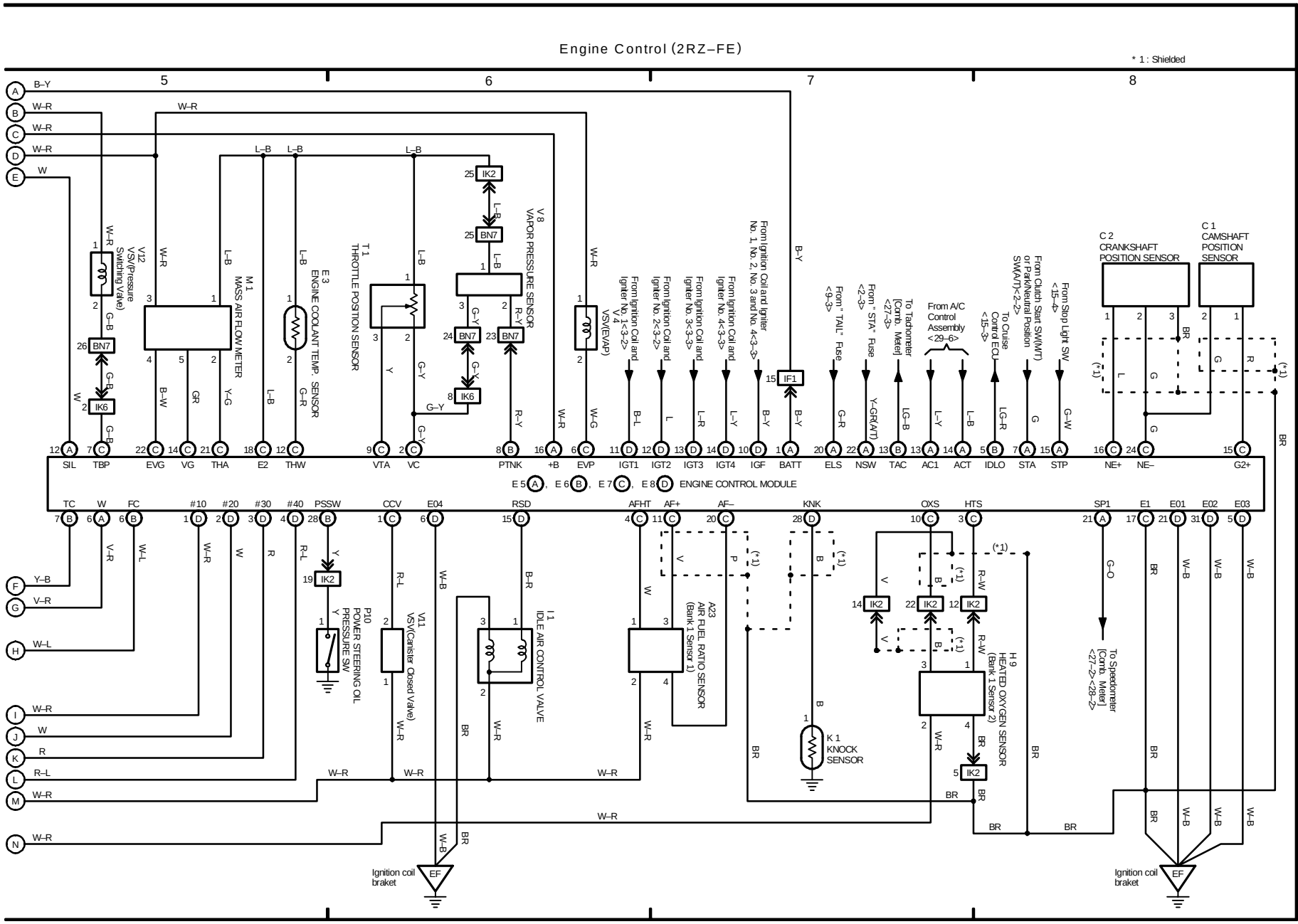
Engine Control (2RZ–FE)
* 1 : Shielded
5
6
7
8
B–Y
W–R
W
W–L
Y–B
V–R
W–L
R–L
R
W
W–R
W–R
L–B
G–B
G–R
B–W
GR
Y–G
G–Y
R–Y
W–G
B–L
L
L–R
L–Y
B–Y
G–R
Y–GR(A/T)
LG–B
L–Y
LG–R
G
G–W
BR
G
R
V
P
B
R–W
G–O
W–B
IK2
IK6
BN7
IF1
M 1 MASS AIR FLOW METER
E 3 ENGINE COOLANT TEMP. SENSOR
T 1 THROTTLE POSITION SENSOR
V 8 VAPOR PRESSURE SENSOR
V 4 VSV(EVAP)
V12 VSV(Pressure Switching Valve)
From Ignition Coil and Igniter No. 1, No. 2, No. 3 and No. 4<3–3>
From Ignition Coil and Igniter No. 1<3–2>
From Ignition Coil and Igniter No. 2<3–2>
From Ignition Coil and Igniter No. 3<3–3>
From Ignition Coil and Igniter No. 4<3–3>
From "TAIL" Fuse <9–3>
From "STA" Fuse <2–3>
To Tachometer [Comb. Meter] <27–3>
From A/C Control Assembly <29–6>
To Cruise Control ECU <15–3>
From Clutch Start SW(M/T) or Park/Neutral Position SW(A/T)<2–2>
From Stop Light SW <15–4>
C 2 CRANKSHAFT POSITION SENSOR
C 1 CAMSHAFT POSITION SENSOR
SIL TBP EVG VG THA E2 THW VTA VC PTNK +B EVP IGT1 IGT2 IGT3 IGT4 IGF BATT ELS NSW TAC AC1 ACT IDLO STA STP NE+ NE– G2+
E 5 (A), E 6 (B), E 7 (C), E 8 (D) ENGINE CONTROL MODULE
TC W FC #10 #20 #30 #40 PSSW CCV E04 RSD AFHT AF+ AF– KNK OXS HTS SP1 E1 E01 E02 E03
P10 POWER STEERING OIL PRESSURE SW
V11 VSV(Canister Closed Valve)
I 1 IDLE AIR CONTROL VALVE
A23 AIR FUEL RATIO SENSOR (Bank 1, Sensor 1)
K 1 KNOCK SENSOR
H 9 HEATED OXYGEN SENSOR (Bank 1 Sensor 2)
To Speedometer [Comb. Meter] <27–2><28–2>
Ignition coil braket
EF
(*1)

M OVERALL ELECTRICAL WIRING DIAGRAM

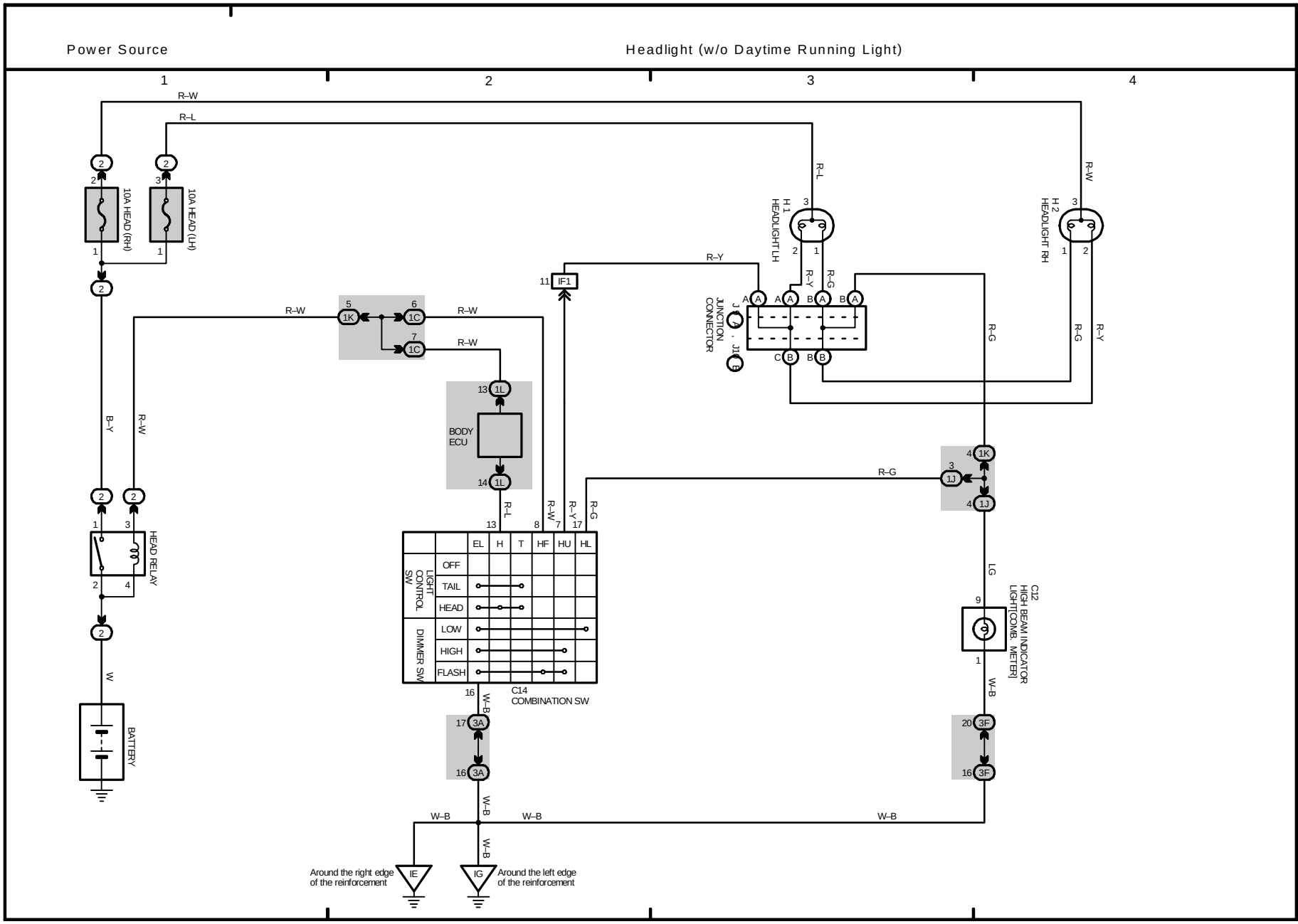
Power Source
Headlight (w/o Daytime Running Light)
1
2
3
4
R–W
R–L
10A HEAD (RH)
10A HEAD (LH)
H1 HEADLIGHT LH
H2 HEADLIGHT RH
R–Y
R–G
IF1
JUNCTION CONNECTOR
J/C
1K
1C
1L
BODY ECU
B–Y
HEAD RELAY
BATTERY
W
LIGHT CONTROL SW
DIMMER SW
OFF
TAIL
HEAD
LOW
HIGH
FLASH
EL
H
T
HF
HU
HL
C14
COMBINATION SW
W–B
3A
1J
LG
C12
HIGH BEAM INDICATOR LIGHT[COMB. METER]
3F
Around the right edge of the reinforcement
IE
IG
Around the left edge of the reinforcement

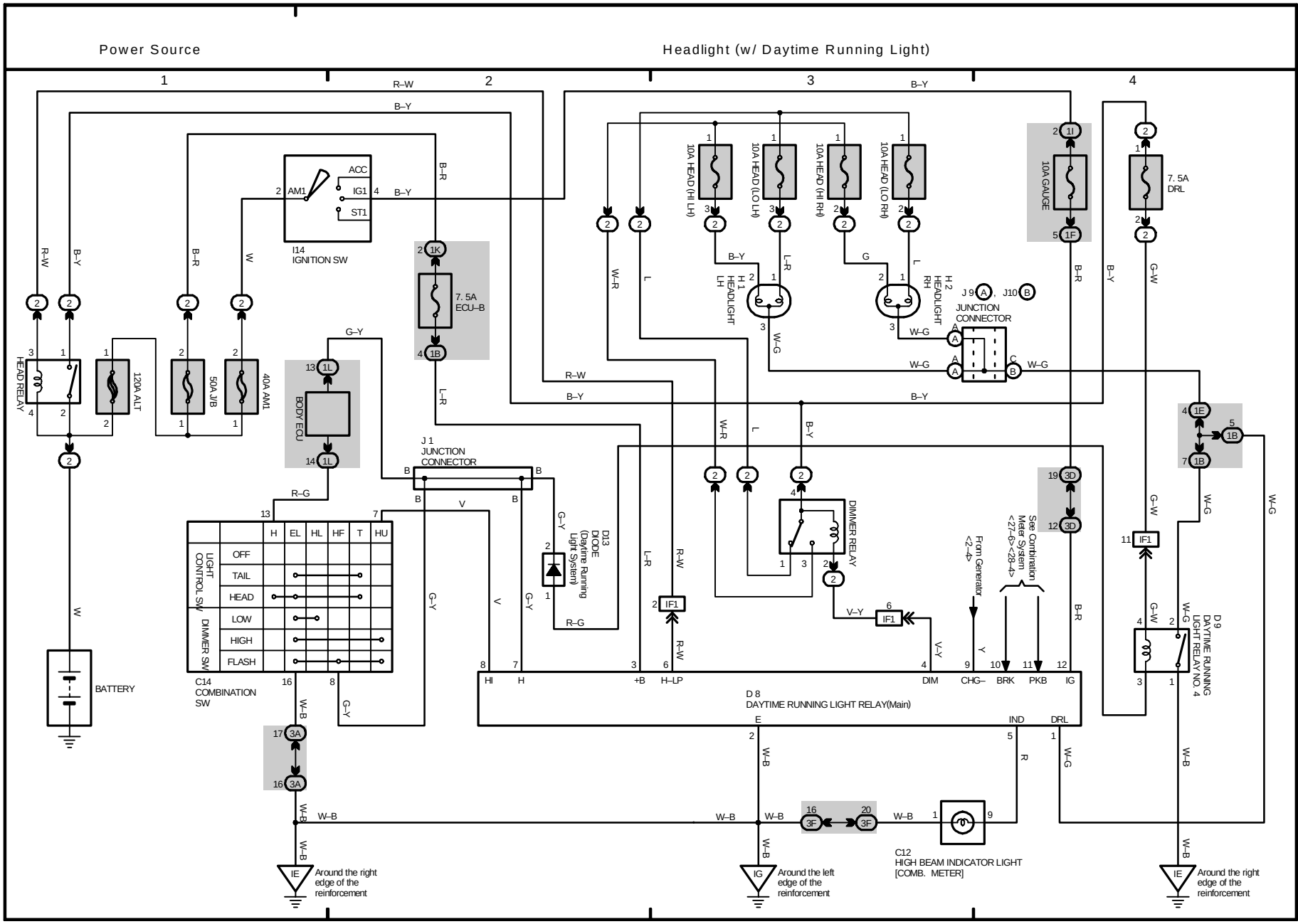
Power Source
Headlight (w/ Daytime Running Light)
1
2
3
4
ACC
IG1
ST1
AM1
I14
IGNITION SW
7. 5A
ECU–B
HEAD RELAY
120A ALT
50A J/B
40A AM1
BODY ECU
BATTERY
J 1
JUNCTION
CONNECTOR
C14
COMBINATION
SW
LIGHT
CONTROL SW
DIMMER SW
OFF
TAIL
HEAD
LOW
HIGH
FLASH
H
EL
HL
HF
T
HU
D13
DIODE
(Daytime Running
Light System)
10A HEAD (HI LH)
10A HEAD (LO LH)
10A HEAD (HI RH)
10A HEAD (LO RH)
10A GAUGE
7. 5A
DRL
H 1
HEADLIGHT
LH
H 2
HEADLIGHT
RH
J 9
J10
JUNCTION
CONNECTOR
DIMMER RELAY
From Generator
<2-4>
See Combination
Meter System
<27-6><28-4>
D 8
DAYTIME RUNNING LIGHT RELAY(Main)
HI
H
+B
H–LP
DIM
CHG–
BRK
PKB
IG
E
IND
DRL
D 9
DAYTIME RUNNING
LIGHT RELAY NO. 4
C12
HIGH BEAM INDICATOR LIGHT
[COMB. METER]
IE
Around the right
edge of the
reinforcement
IG
Around the left
edge of the
reinforcement
IE
Around the right
edge of the
reinforcement

M OVERALL ELECTRICAL WIRING DIAGRAM

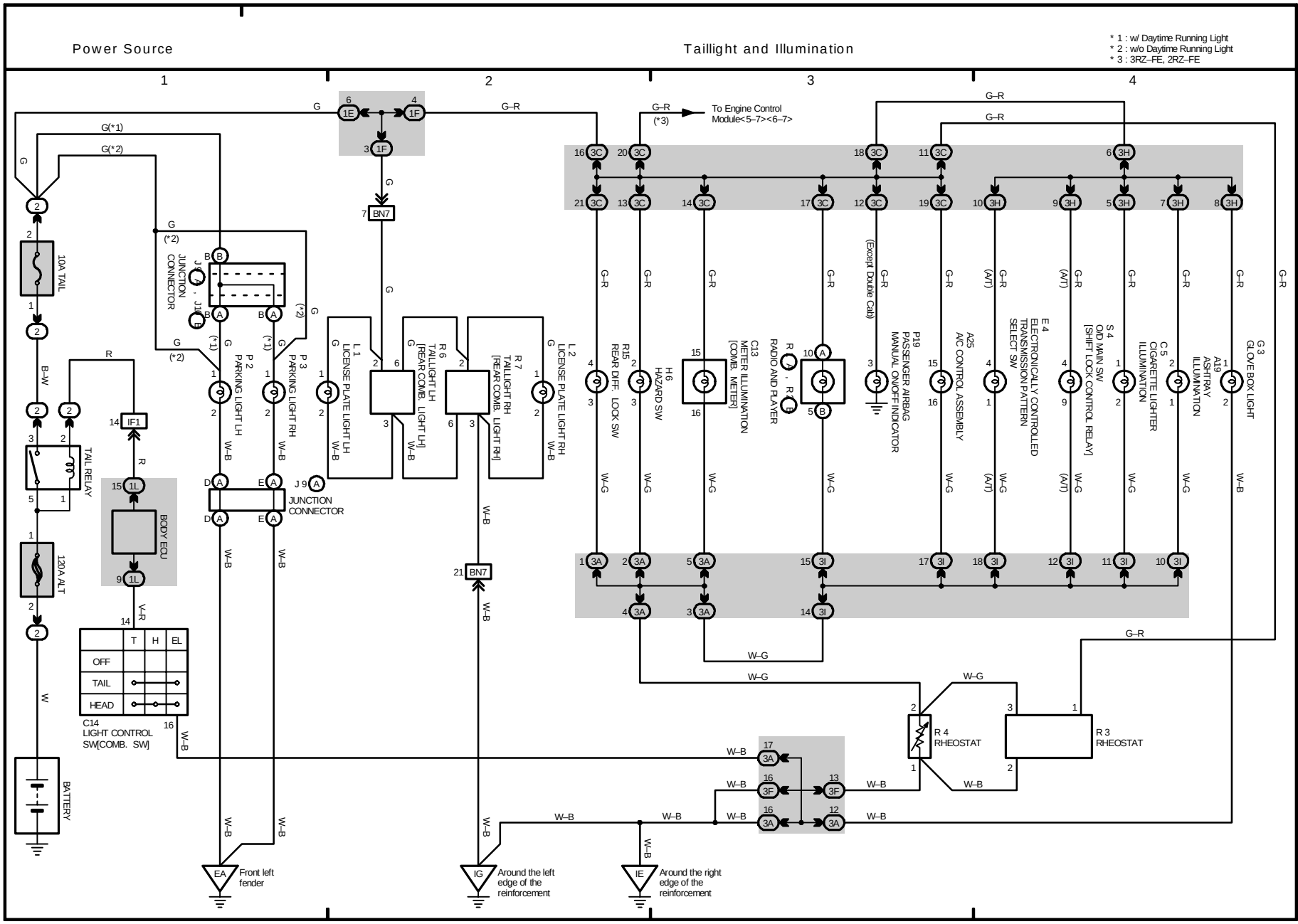
Power Source
Taillight and Illumination
* 1 : w/ Daytime Running Light
* 2 : w/o Daytime Running Light
* 3 : 3RZ–FE, 2RZ–FE
1
2
3
4
10A TAIL
120A ALT
TAIL RELAY
BODY ECU
C14
LIGHT CONTROL
SW[COMB. SW]
T
H
EL
OFF
TAIL
HEAD
BATTERY
JUNCTION CONNECTOR
P 2
PARKING LIGHT LH
P 3
PARKING LIGHT RH
L 1
LICENSE PLATE LIGHT LH
L 2
LICENSE PLATE LIGHT RH
R 6
TAILLIGHT LH
[REAR COMB. LIGHT LH]
R 7
TAILLIGHT RH
[REAR COMB. LIGHT RH]
To Engine Control
Module<5–7><6–7>
R15
REAR DIFF. LOCK SW
H6
HAZARD SW
C13
METER ILLUMINATION
[COMB. METER]
R 1 , R 2
RADIO AND PLAYER
P19
PASSENGER AIRBAG
MANUAL ON/OFF INDICATOR
(Except Double Cab)
A25
A/C CONTROL ASSEMBLY
E 4
ELECTRONICALLY CONTROLLED
TRANSMISSION PATTERN
SELECT SW
(A/T)
S 4
O/D MAIN SW
[SHIFT LOCK CONTROL RELAY]
C 5
CIGARETTE LIGHTER
ILLUMINATION
A19
ASHTRAY
ILLUMINATION
G 3
GLOVE BOX LIGHT
R 4
RHEOSTAT
R 3
RHEOSTAT
EA
Front left
fender
IG
Around the left
edge of the
reinforcement
IE
Around the right
edge of the
reinforcement

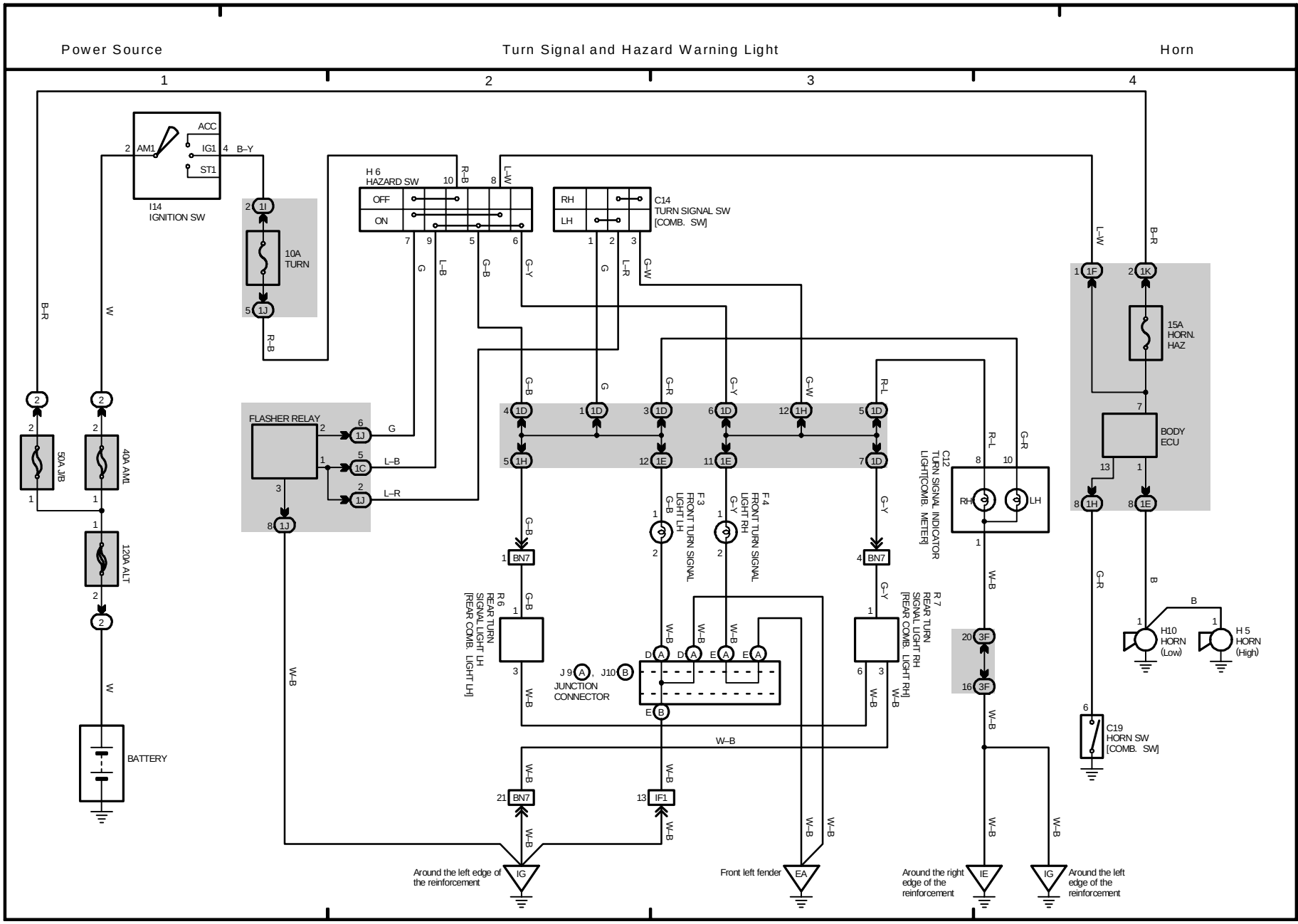
Power Source
Turn Signal and Hazard Warning Light
Horn
1
2
3
4
ACC
AM1
IG1
ST1
B–Y
I14
IGNITION SW
10A
TURN
H 6
HAZARD SW
OFF
ON
C14
TURN SIGNAL SW
[COMB. SW]
RH
LH
FLASHER RELAY
50A J/B
40A AM1
120A ALT
BATTERY
F 3
FRONT TURN SIGNAL LIGHT LH
F 4
FRONT TURN SIGNAL LIGHT RH
C12
TURN SIGNAL INDICATOR LIGHT[COMB. METER]
R 6
REAR TURN SIGNAL LIGHT LH [REAR COMB. LIGHT LH]
R 7
REAR TURN SIGNAL LIGHT RH [REAR COMB. LIGHT RH]
J 9
J10
JUNCTION CONNECTOR
15A
HORN, HAZ
BODY ECU
H10
HORN (Low)
H 5
HORN (High)
C19
HORN SW
[COMB. SW]
Around the left edge of the reinforcement
Front left fender
Around the right edge of the reinforcement
Around the left edge of the reinforcement

M OVERALL ELECTRICAL WIRING DIAGRAM

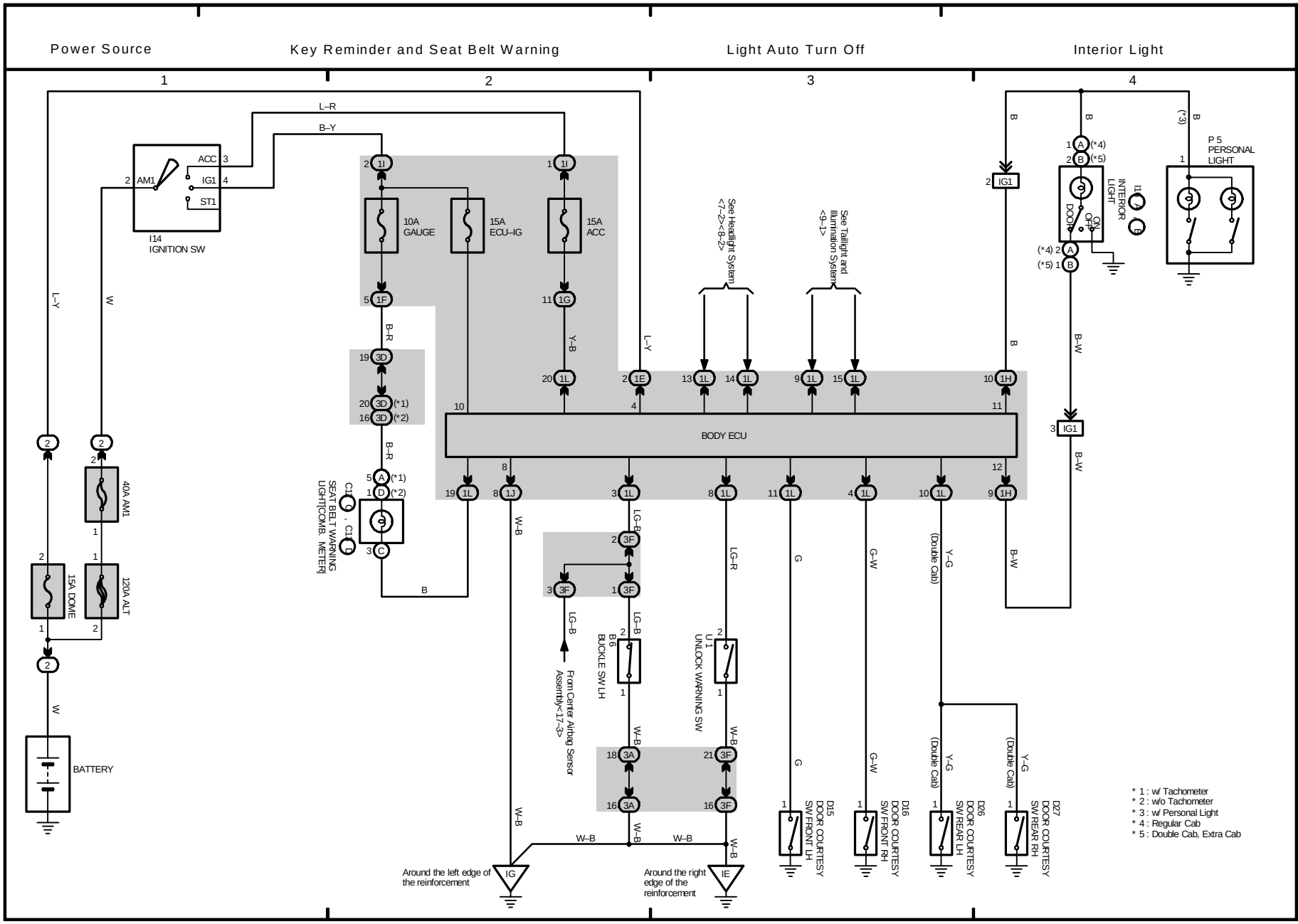
Power Source
Key Reminder and Seat Belt Warning
Light Auto Turn Off
Interior Light
1
2
3
4
I14
IGNITION SW
ACC
IG1
ST1
AM1
10A GAUGE
15A ECU–IG
15A ACC
BODY ECU
See Headlight System <7–2><8–2>
See Taillight and Illumination System <9–1>
40A AM1
15A DOME
120A ALT
BATTERY
SEAT BELT WARNING LIGHT[COMB. METER]
BUCKLE SW LH
From Center Airbag Sensor Assembly<17–3>
UNLOCK WARNING SW
P 5
PERSONAL LIGHT
INTERIOR LIGHT
DOOR
ON
OFF
D15
DOOR COURTESY SW FRONT LH
D16
DOOR COURTESY SW FRONT RH
D26
DOOR COURTESY SW REAR LH
D27
DOOR COURTESY SW REAR RH
(Double Cab)
Around the left edge of the reinforcement
Around the right edge of the reinforcement
IG
IE
* 1 : w/ Tachometer
* 2 : w/o Tachometer
* 3 : w/ Personal Light
* 4 : Regular Cab
* 5 : Double Cab, Extra Cab

M OVERALL ELECTRICAL WIRING DIAGRAM

(Cont. next page)

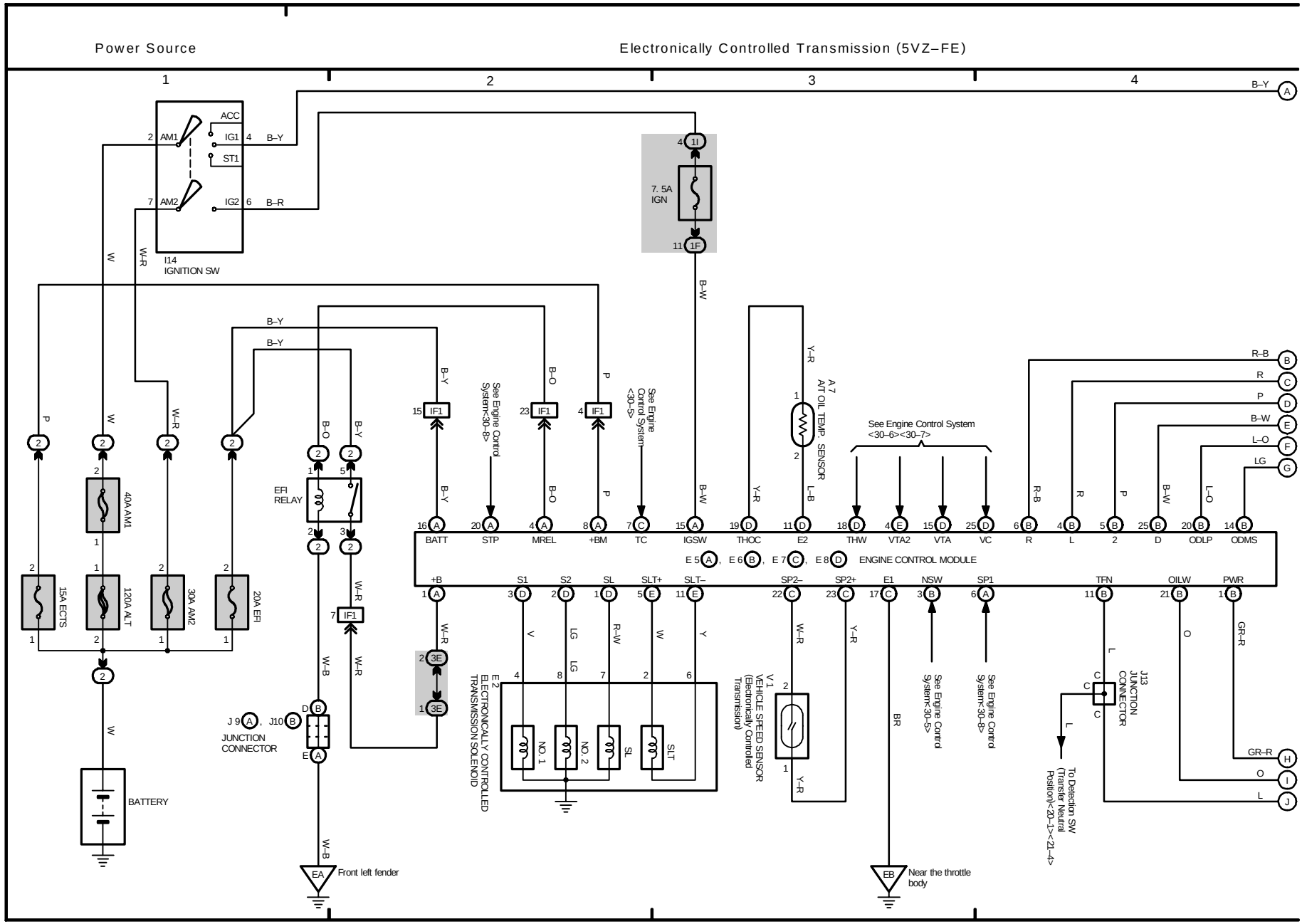

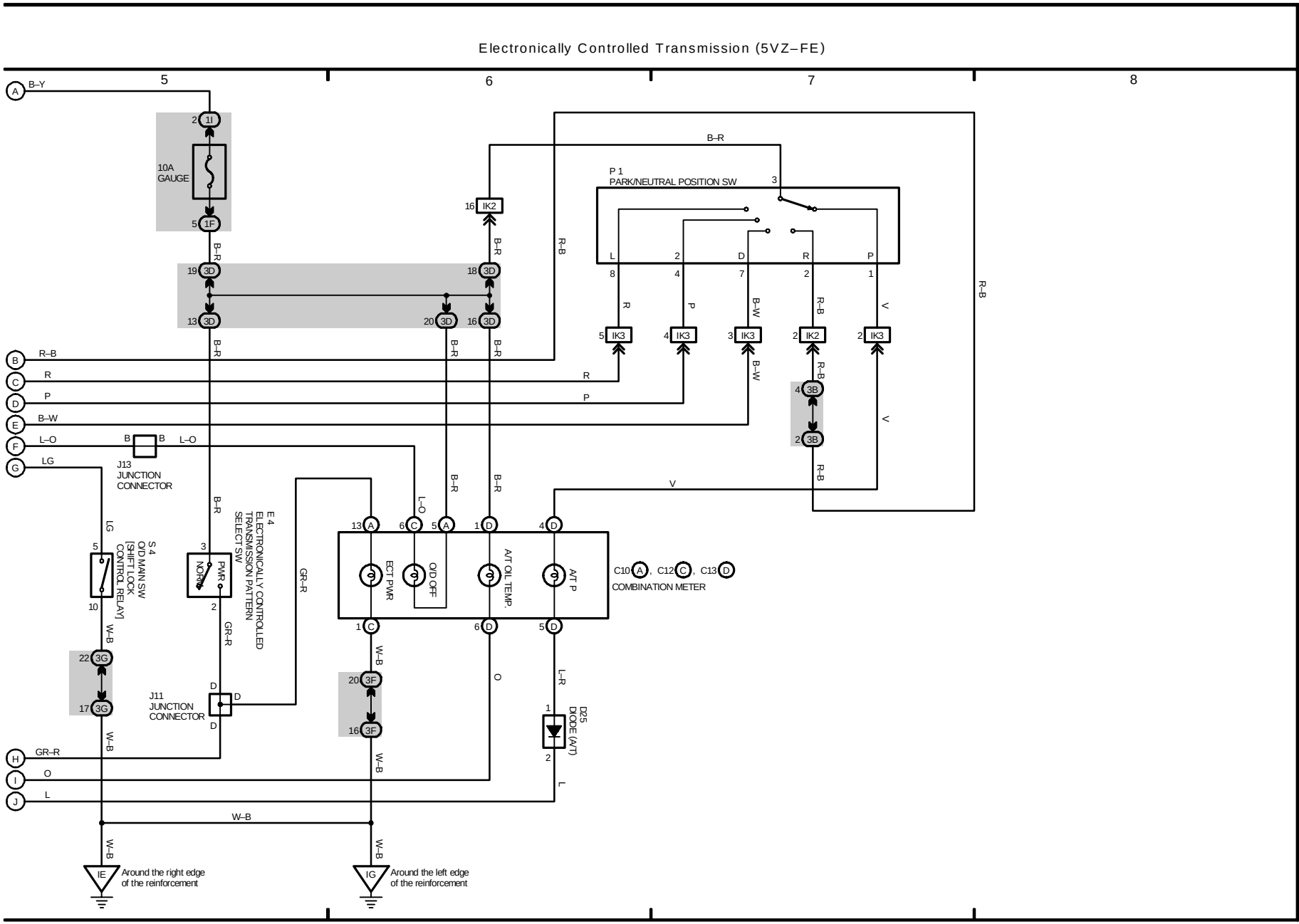
Electronically Controlled Transmission (5VZ–FE)
5
6
7
8
B–Y
10A GAUGE
2 1I
5 1F
B–R
19 3D
18 3D
13 3D
20 3D
16 3D
16 IK2
P 1
PARK/NEUTRAL POSITION SW
3
L
2
D
R
P
8
4
7
2
1
R
P
B–W
R–B
V
5 IK3
4 IK3
3 IK3
2 IK2
2 IK3
R–B
B
C
D
E
F
G
R–B
R
P
B–W
L–O
LG
B
B
L–O
J13 JUNCTION CONNECTOR
4 3B
2 3B
R–B
V
B–R
L–O
13 A
6 C
5 A
1 D
4 D
E 4 ELECTRONICALLY CONTROLLED TRANSMISSION PATTERN SELECT SW
S 4 O/D MAIN SW [SHIFT LOCK CONTROL RELAY]
5
3
NORM
PWR
10
2
GR–R
W–B
22 3G
17 3G
J11 JUNCTION CONNECTOR
D
D
D
ECT PWR
O/D OFF
A/T OIL TEMP.
A/T P
C10 A , C12 C , C13 D
COMBINATION METER
1 C
6 D
5 D
W–B
20 3F
16 3F
O
L–R
1
D25 DIODE (A/T)
2
L
H
I
J
GR–R
O
L
W–B
W–B
W–B
W–B
IE
Around the right edge of the reinforcement
IG
Around the left edge of the reinforcement

M OVERALL ELECTRICAL WIRING DIAGRAM

(Cont. next page)

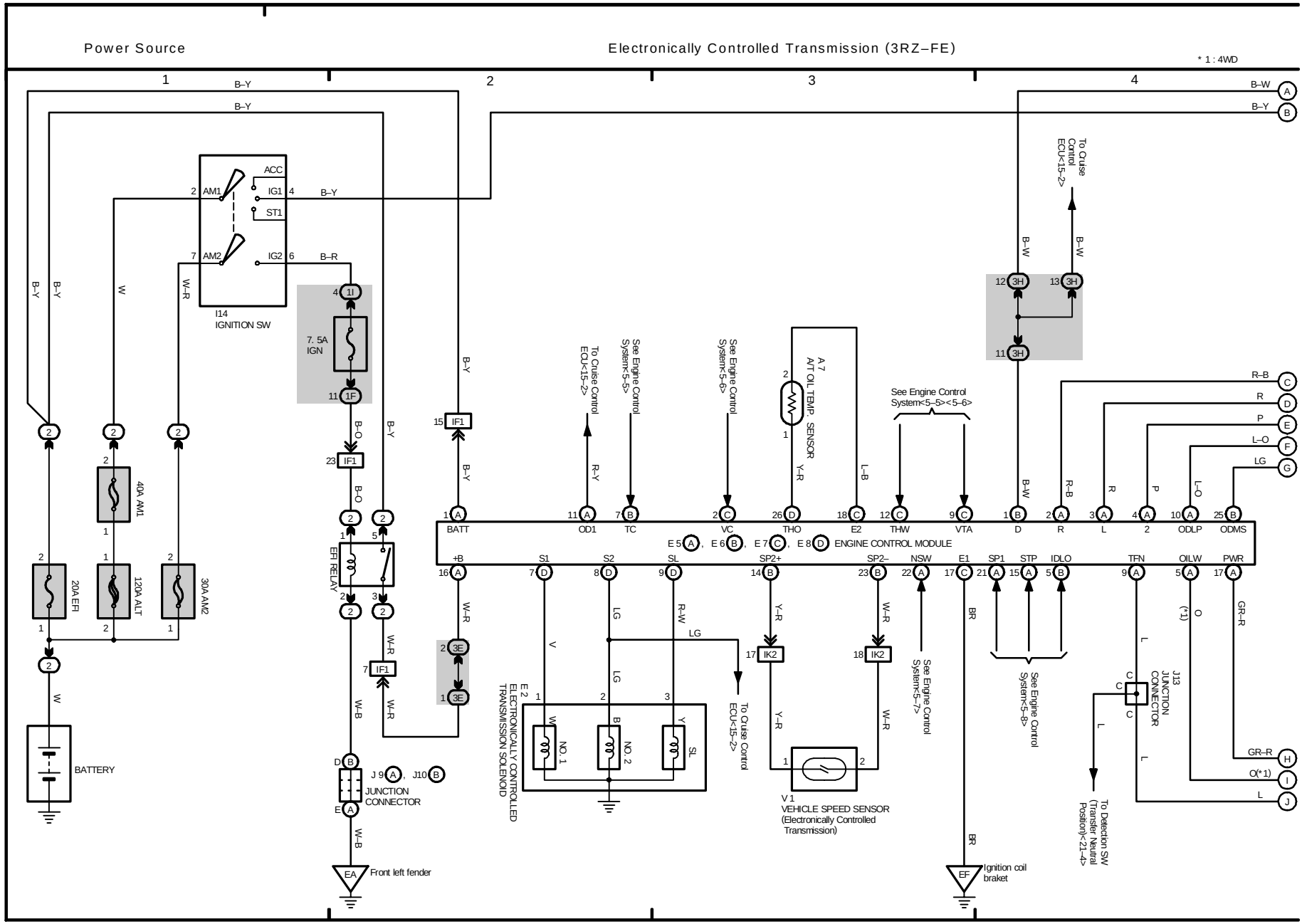

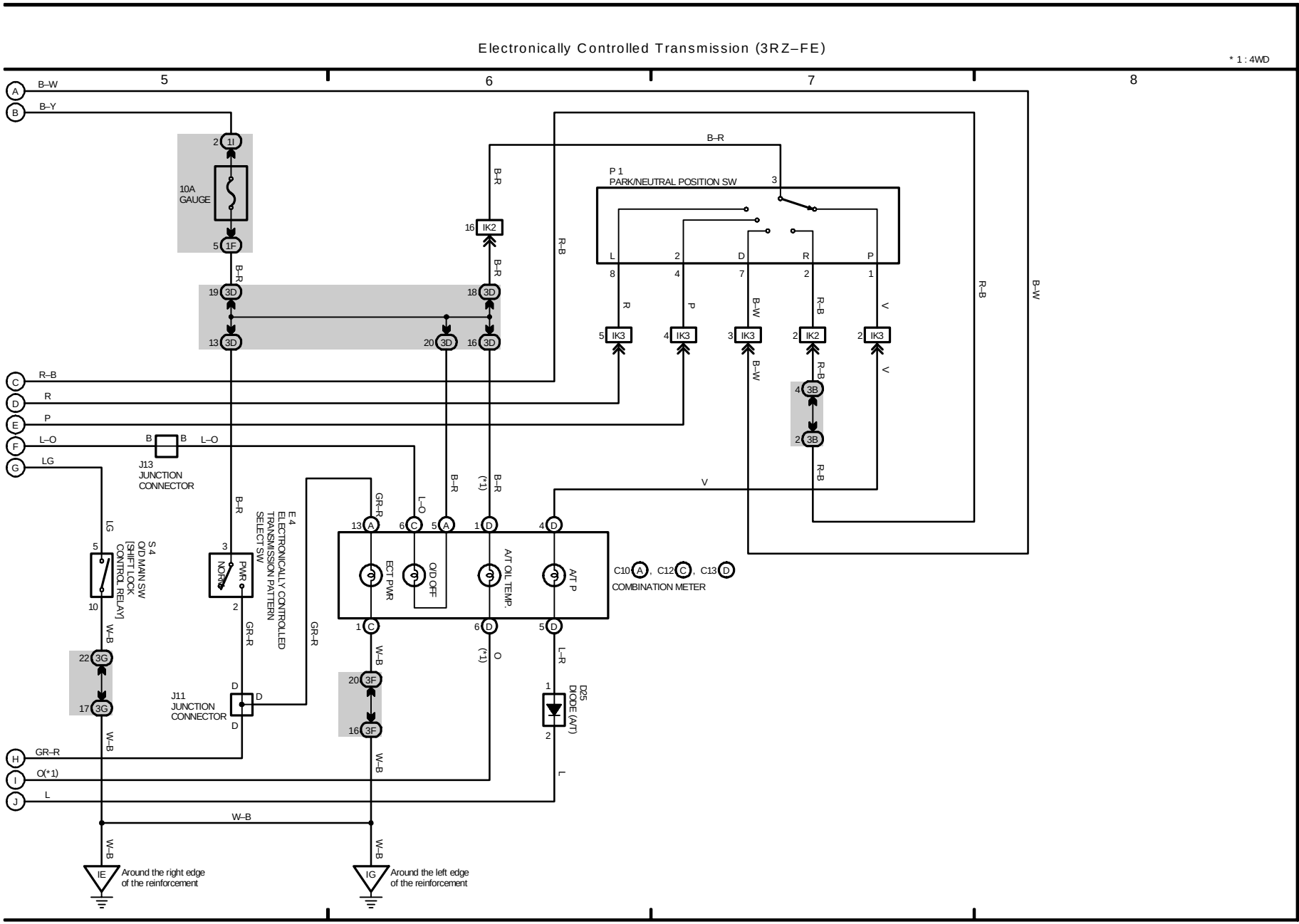
Electronically Controlled Transmission (3RZ–FE)
* 1 : 4WD
5
6
7
8
B–W
B–Y
10A GAUGE
P 1
PARK/NEUTRAL POSITION SW
L
2
D
R
P
J13 JUNCTION CONNECTOR
J11 JUNCTION CONNECTOR
S 4
O/D MAIN SW [SHIFT LOCK CONTROL RELAY]
E 4
ELECTRONICALLY CONTROLLED TRANSMISSION PATTERN SELECT SW
NORM
PWR
ECT PWR
O/D OFF
A/T OIL TEMP.
A/T P
C10 A , C12 C , C13 D
COMBINATION METER
D25
DIODE (A/T)
Around the right edge of the reinforcement
Around the left edge of the reinforcement
IE
IG

M OVERALL ELECTRICAL WIRING DIAGRAM

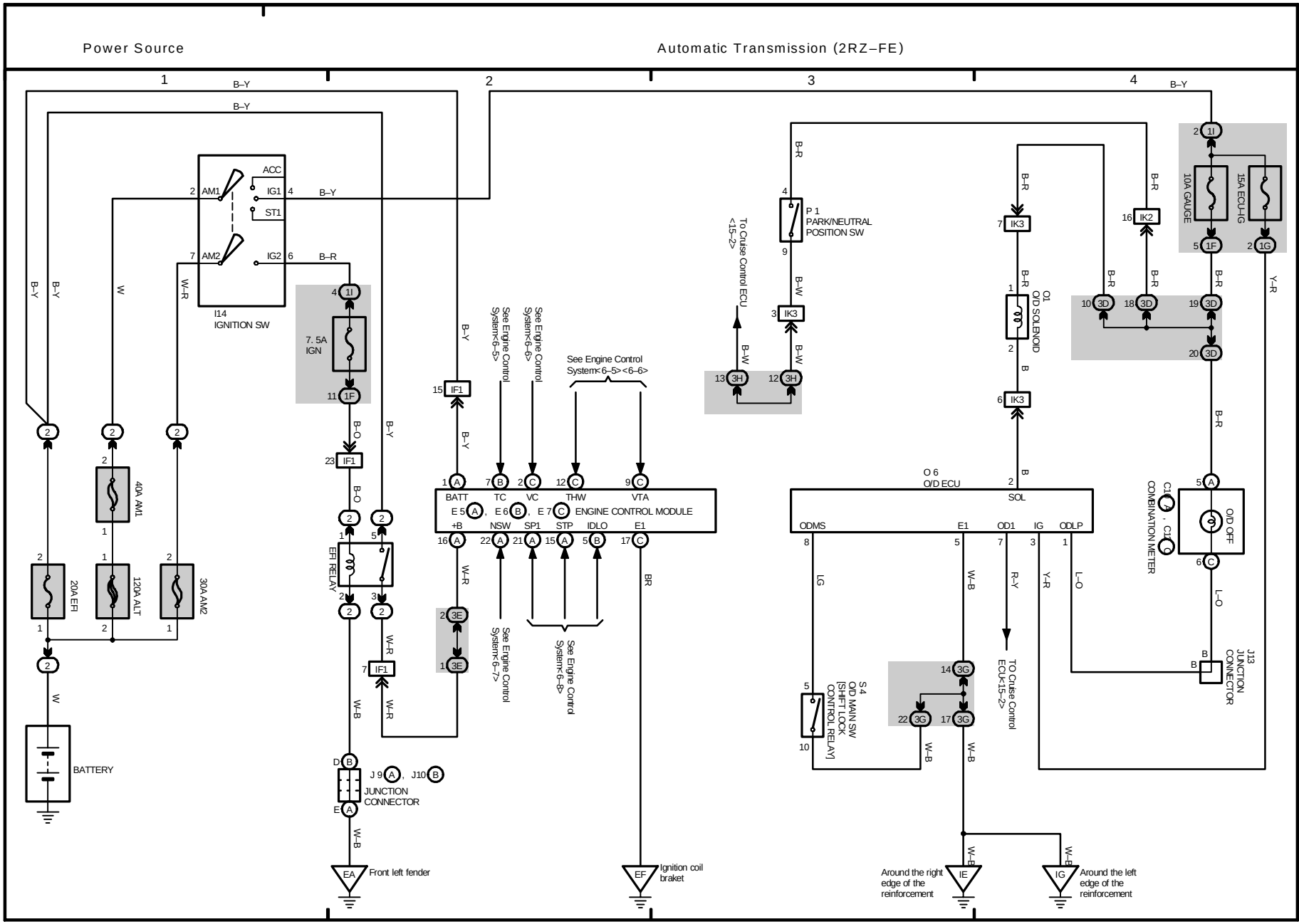
Power Source
Automatic Transmission (2RZ–FE)
1
2
3
4
B–Y
B–R
W
W–R
B–O
W–B
R–Y
Y–R
L–O
LG
BR
ACC
IG1
ST1
IG2
AM1
AM2
I14
IGNITION SW
7. 5A
IGN
40A AM1
20A EFI
120A ALT
30A AM2
EFI RELAY
BATTERY
J 9 , J10
JUNCTION
CONNECTOR
EA
Front left fender
EF
Ignition coil
braket
See Engine Control
System<6–5><6–6>
See Engine Control
System<6–7>
See Engine Control
System<6–8>
BATT
TC
VC
THW
VTA
E 5 , E 6 , E 7
ENGINE CONTROL MODULE
+B
NSW
SP1
STP
IDLO
E1
P 1
PARK/NEUTRAL
POSITION SW
To Cruise Control ECU
<15–2>
O1
O/D SOLENOID
O 6
O/D ECU
SOL
ODMS
E1
OD1
IG
ODLP
S 4
O/D MAIN SW
[SHIFT LOCK
CONTROL RELAY]
TO Cruise Control
ECU<15–2>
10A GAUGE
15A ECU–IG
O/D OFF
C10 , C11
COMBINATION METER
J13
JUNCTION
CONNECTOR
Around the right
edge of the
reinforcement
IE
IG
Around the left
edge of the
reinforcement

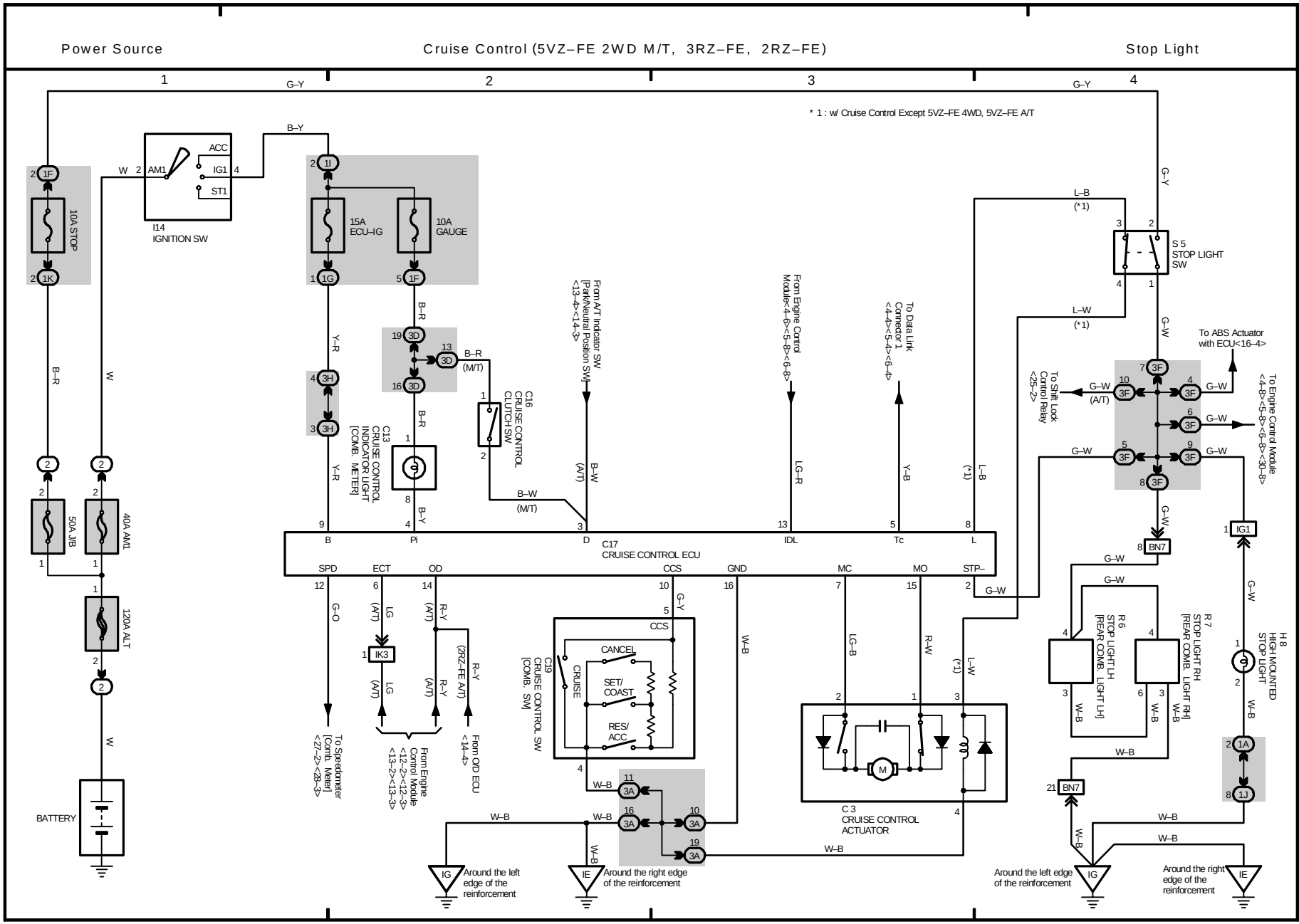
Power Source
Cruise Control (5VZ–FE 2WD M/T, 3RZ–FE, 2RZ–FE)
Stop Light
* 1 : w/ Cruise Control Except 5VZ–FE 4WD, 5VZ–FE A/T
BATTERY
10A STOP
50A J/B
40A AM1
120A ALT
I14 IGNITION SW
ACC
IG1
ST1
15A ECU–IG
10A GAUGE
S 5 STOP LIGHT SW
C16 CRUISE CONTROL CLUTCH SW
C13 CRUISE CONTROL INDICATOR LIGHT [COMB. METER]
From A/T Indicator SW [Park/Neutral Position SW] <13–4><14–3>
From Engine Control Module<4–6><5–8><6–8>
To Data Link Connector 1 <4–4><5–4><6–4>
To ABS Actuator with ECU<16–4>
To Shift Lock Control Relay <25–2>
To Engine Control Module <4–8><5–8><6–8><30–8>
C17 CRUISE CONTROL ECU
B
PI
D
IDL
Tc
L
SPD
ECT
OD
CCS
GND
MC
MO
STP–
To Speedometer [Comb. Meter] <27–2><28–3>
From Engine Control Module <12–2><12–3><13–2><13–3>
From OD ECU <14–4>
C19 CRUISE CONTROL SW [COMB. SW]
CANCEL
SET/ COAST
RES/ ACC
CRUISE
C 3 CRUISE CONTROL ACTUATOR
R 6 STOP LIGHT LH [REAR COMB. LIGHT LH]
R 7 STOP LIGHT RH [REAR COMB. LIGHT RH]
H 8 HIGH MOUNTED STOP LIGHT
Around the left edge of the reinforcement
Around the right edge of the reinforcement
Around the left edge of the reinforcement
Around the right edge of the reinforcement

M OVERALL ELECTRICAL WIRING DIAGRAM

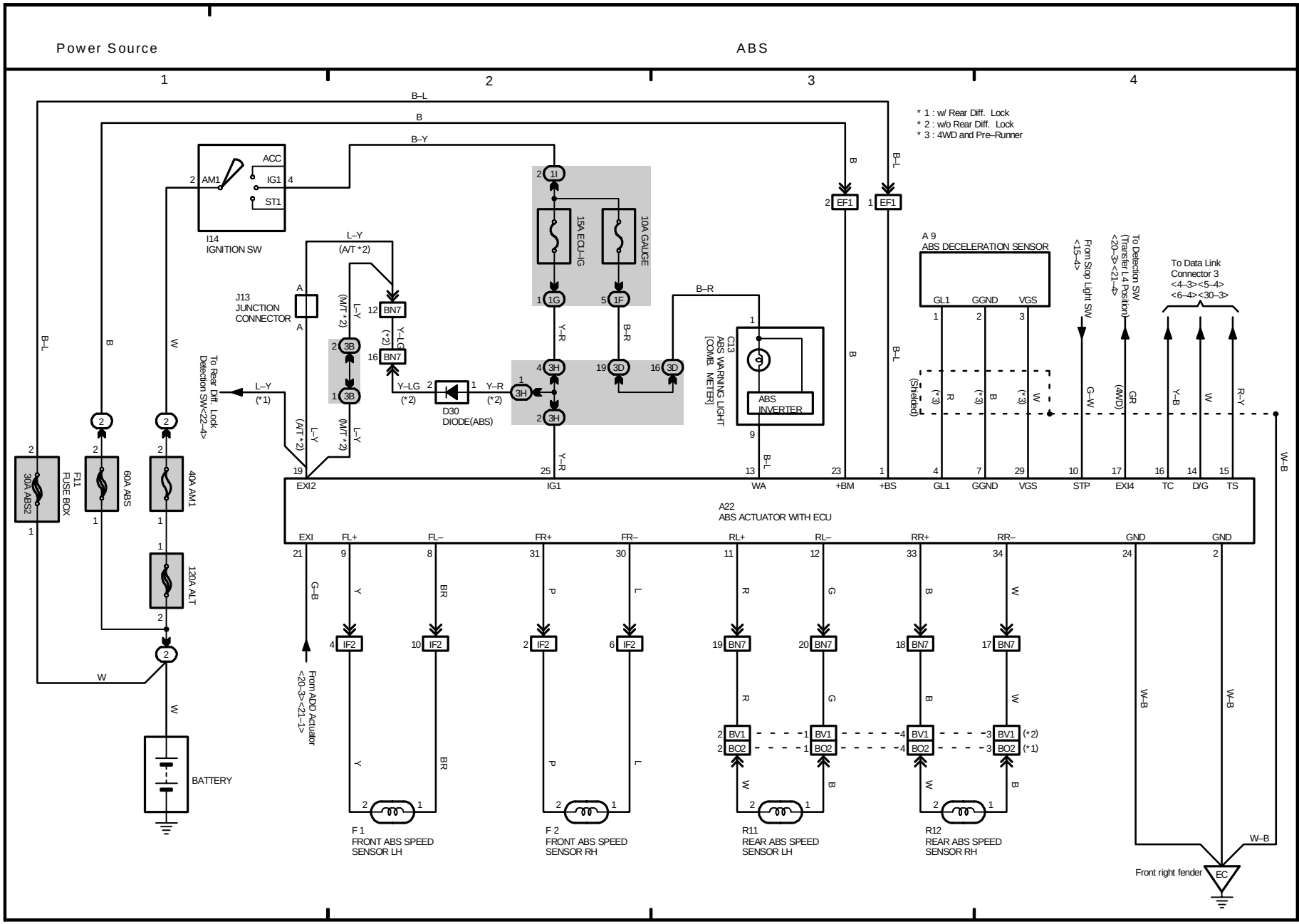
Power Source
ABS
1
2
3
4
* 1 : w/ Rear Diff. Lock
* 2 : w/o Rear Diff. Lock
* 3 : 4WD and Pre–Runner
I14
IGNITION SW
ACC
IG1
ST1
AM1
J13
JUNCTION
CONNECTOR
15A ECU–IG
10A GAUGE
D30
DIODE(ABS)
C13
ABS WARNING LIGHT
[COMB. METER]
ABS
INVERTER
A 9
ABS DECELERATION SENSOR
GL1
GGND
VGS
(Shielded)
From Stop Light SW
<15–4>
To Detection SW
(Transfer L4 Position)
<20–3><21–4>
To Data Link
Connector 3
<4–3><5–4>
<6–4><30–3>
To Rear Diff. Lock
Detection SW<22–4>
F11
FUSE BOX
30A ABS2
60A ABS
40A AM1
120A ALT
BATTERY
A22
ABS ACTUATOR WITH ECU
EXI2
IG1
WA
+BM
+BS
GL1
GGND
VGS
STP
EXI4
TC
D/G
TS
EXI
FL+
FL–
FR+
FR–
RL+
RL–
RR+
RR–
GND
GND
From ADD Actuator
<20–3><21–1>
F 1
FRONT ABS SPEED
SENSOR LH
F 2
FRONT ABS SPEED
SENSOR RH
R11
REAR ABS SPEED
SENSOR LH
R12
REAR ABS SPEED
SENSOR RH
Front right fender
EC

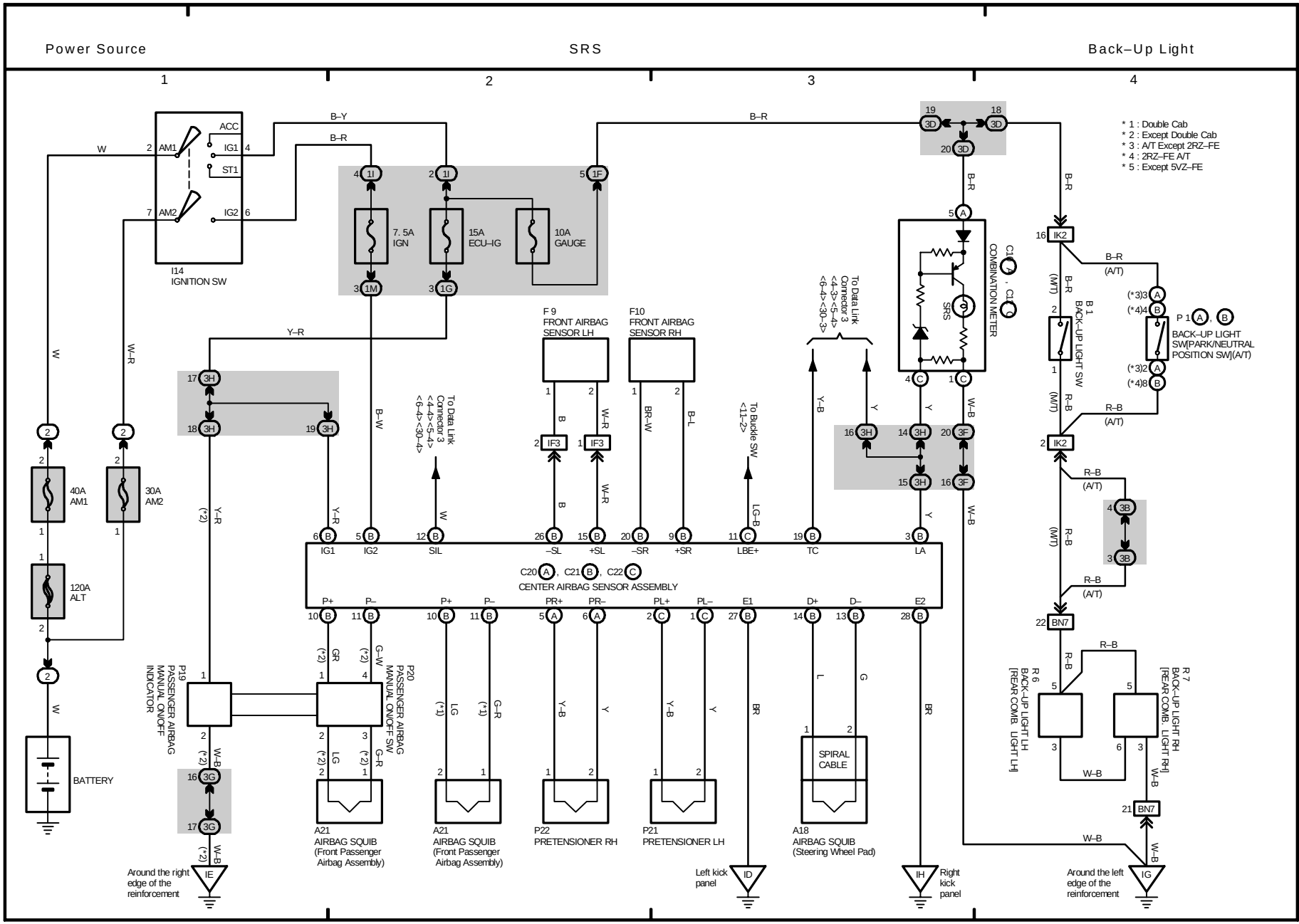
Power Source
SRS
Back–Up Light
1
2
3
4
* 1 : Double Cab
* 2 : Except Double Cab
* 3 : A/T Except 2RZ–FE
* 4 : 2RZ–FE A/T
* 5 : Except 5VZ–FE
I14
IGNITION SW
ACC
IG1
ST1
IG2
AM1
AM2
7. 5A
IGN
15A
ECU–IG
10A
GAUGE
40A
AM1
30A
AM2
120A
ALT
BATTERY
F 9
FRONT AIRBAG
SENSOR LH
F10
FRONT AIRBAG
SENSOR RH
To Data Link
Connector 3
<4–3><5–4>
<6–4><3D–3>
To Data Link
Connector 3
<4–3><5–4>
<6–4><3D–4>
To Buckle SW
<11–2>
COMBINATION METER
SRS
C19 , C18
C20 , C21 , C22
CENTER AIRBAG SENSOR ASSEMBLY
IG1
IG2
SIL
–SL
+SL
–SR
+SR
LBE+
TC
LA
P+
P–
PR+
PR–
PL+
PL–
E1
D+
D–
E2
P19
PASSENGER AIRBAG
MANUAL ON/OFF
INDICATOR
P20
PASSENGER AIRBAG
MANUAL ON/OFF SW
A21
AIRBAG SQUIB
(Front Passenger
Airbag Assembly)
A21
AIRBAG SQUIB
(Front Passenger
Airbag Assembly)
P22
PRETENSIONER RH
P21
PRETENSIONER LH
A18
AIRBAG SQUIB
(Steering Wheel Pad)
SPIRAL
CABLE
Around the right
edge of the
reinforcement
Left kick
panel
Right
kick
panel
Around the left
edge of the
reinforcement
B 1
BACK–UP LIGHT SW
P 1
BACK–UP LIGHT
SW[PARK/NEUTRAL
POSITION SW](A/T)
R 6
BACK–UP LIGHT LH
[REAR COMB. LIGHT LH]
R 7
BACK–UP LIGHT RH
[REAR COMB. LIGHT RH]
(M/T)
(A/T)
(*1)
(*2)
(*3)
(*4)

M OVERALL ELECTRICAL WIRING DIAGRAM

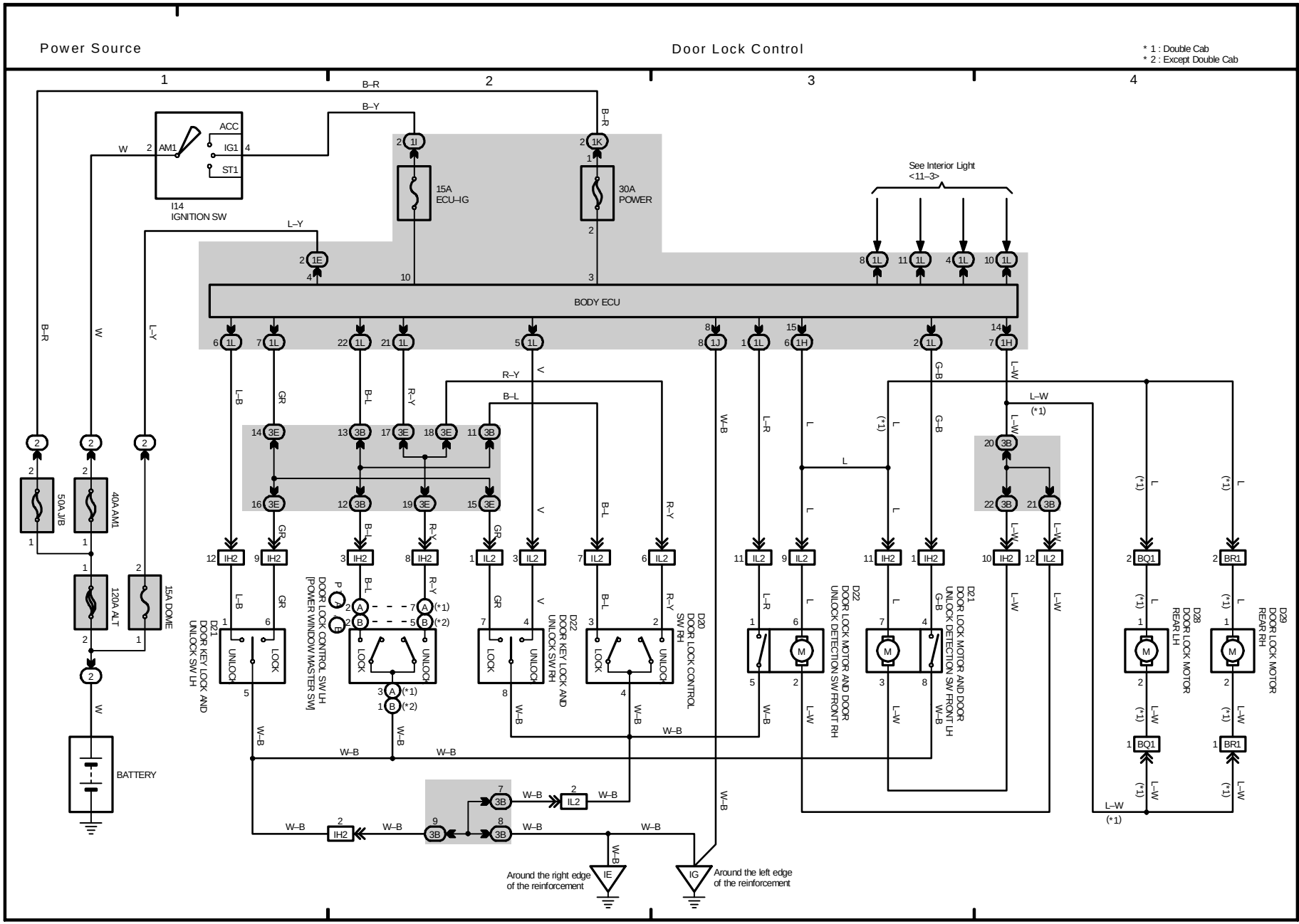
Power Source
Door Lock Control
* 1 : Double Cab
* 2 : Except Double Cab
ACC
IG1
ST1
AM1
I14
IGNITION SW
15A
ECU–IG
30A
POWER
See Interior Light
<11–3>
BODY ECU
50A J/B
40A AM1
120A ALT
15A DOME
BATTERY
D21
DOOR KEY LOCK AND
UNLOCK SW LH
DOOR LOCK CONTROL SW LH
[POWER WINDOW MASTER SW]
D22
DOOR KEY LOCK AND
UNLOCK SW RH
D20
DOOR LOCK CONTROL
SW RH
D22
DOOR LOCK MOTOR AND DOOR
UNLOCK DETECTION SW FRONT RH
D21
DOOR LOCK MOTOR AND DOOR
UNLOCK DETECTION SW FRONT LH
D28
DOOR LOCK MOTOR
REAR LH
D29
DOOR LOCK MOTOR
REAR RH
Around the right edge
of the reinforcement
IE
IG
Around the left edge
of the reinforcement

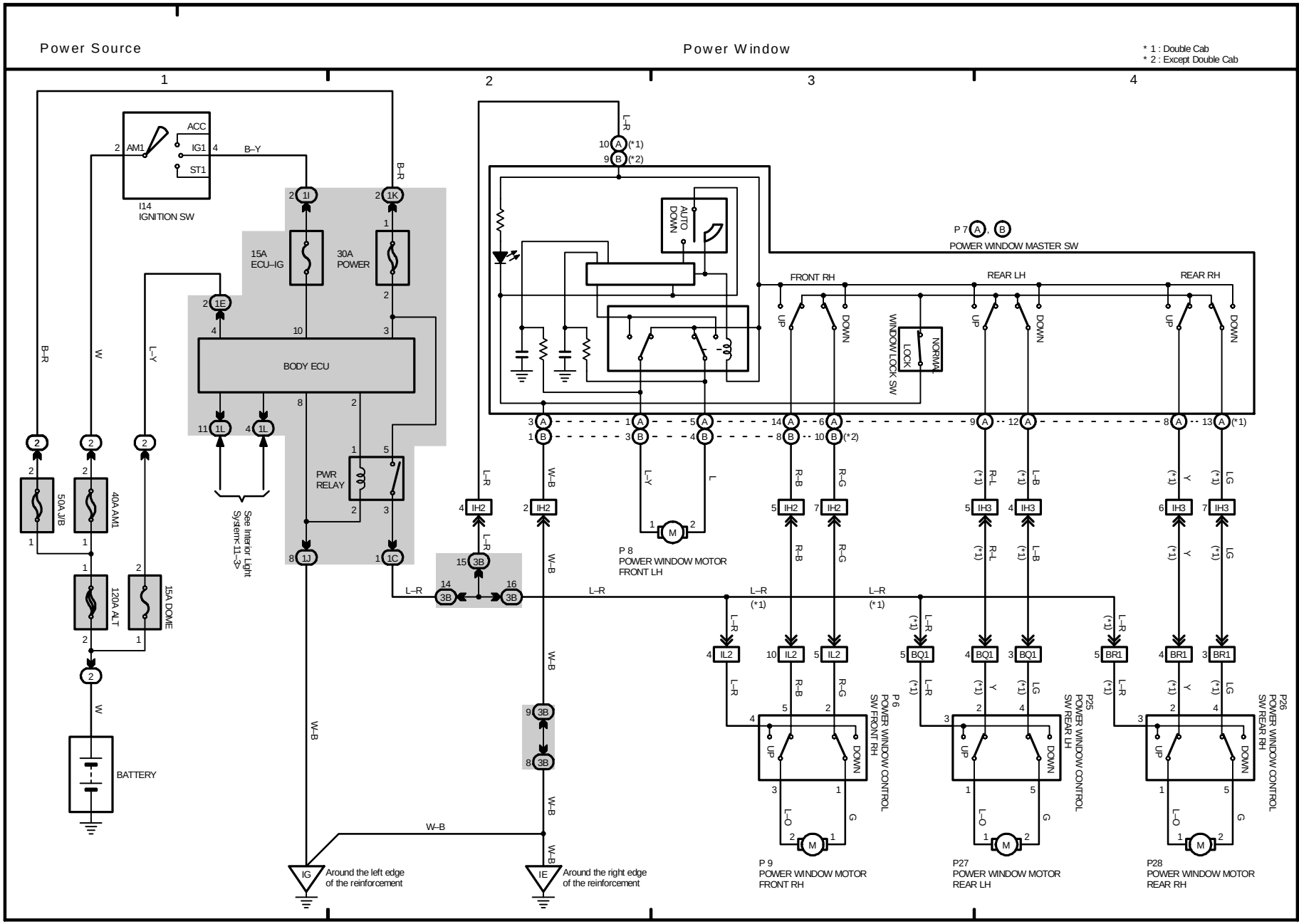
Power Source
Power Window
* 1 : Double Cab
* 2 : Except Double Cab
1
2
3
4
ACC
AM1
IG1
ST1
B–Y
B–R
I14
IGNITION SW
15A
ECU–IG
30A
POWER
BODY ECU
PWR
RELAY
See Interior Light
System<11–3>
50A J/B
40A AM1
120A ALT
15A DOME
W
L–Y
BATTERY
W–B
IG
Around the left edge
of the reinforcement
IE
Around the right edge
of the reinforcement
L–R
W–B
R–B
R–G
R–L
L–B
Y
LG
L
L–O
G
P 7
POWER WINDOW MASTER SW
AUTO
DOWN
FRONT RH
REAR LH
REAR RH
UP
DOWN
WINDOW LOCK SW
LOCK
NORMAL
P 8
POWER WINDOW MOTOR
FRONT LH
P 9
POWER WINDOW MOTOR
FRONT RH
P27
POWER WINDOW MOTOR
REAR LH
P28
POWER WINDOW MOTOR
REAR RH
P6
POWER WINDOW CONTROL
SW FRONT RH
P25
POWER WINDOW CONTROL
SW REAR LH
P26
POWER WINDOW CONTROL
SW REAR RH

M OVERALL ELECTRICAL WIRING DIAGRAM

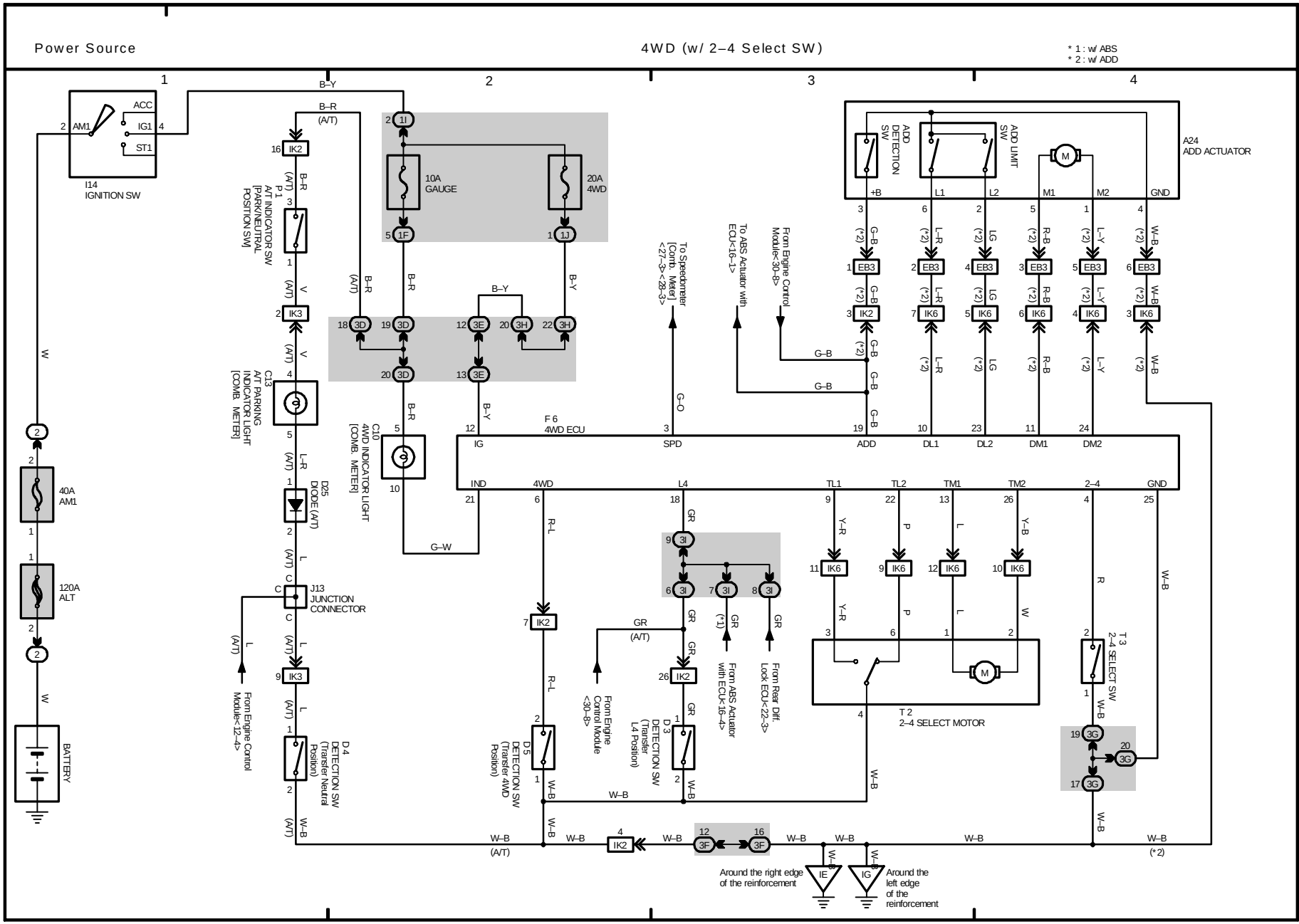
Power Source
4WD (w/ 2–4 Select SW)
* 1 : w/ ABS
* 2 : w/ ADD
I14 IGNITION SW
ACC
IG1
ST1
AM1
10A GAUGE
20A 4WD
A24 ADD ACTUATOR
ADD DETECTION SW
ADD LIMIT SW
F 6 4WD ECU
IG
SPD
ADD
DL1
DL2
DM1
DM2
IND
4WD
L4
TL1
TL2
TM1
TM2
2–4
GND
C13 A/T PARKING INDICATOR LIGHT [COMB. METER]
C10 4WD INDICATOR LIGHT [COMB. METER]
D25 DIODE (A/T)
J13 JUNCTION CONNECTOR
P1 A/T INDICATOR SW [PARK/NEUTRAL POSITION SW]
D4 DETECTION SW (Transfer Neutral Position)
D5 DETECTION SW (Transfer 4WD Position)
D3 DETECTION SW (Transfer L4 Position)
T 2 2–4 SELECT MOTOR
T 3 2–4 SELECT SW
40A AM1
120A ALT
BATTERY
To Speedometer [Comb. Meter] <27–3>,<28–3>
To ABS Actuator with ECU<16–1>
From Engine Control Module<30–8>
From Engine Control Module<12–4>
From ABS Actuator with ECU<16–4>
From Rear Diff. Lock ECU<22–3>
Around the right edge of the reinforcement
Around the left edge of the reinforcement

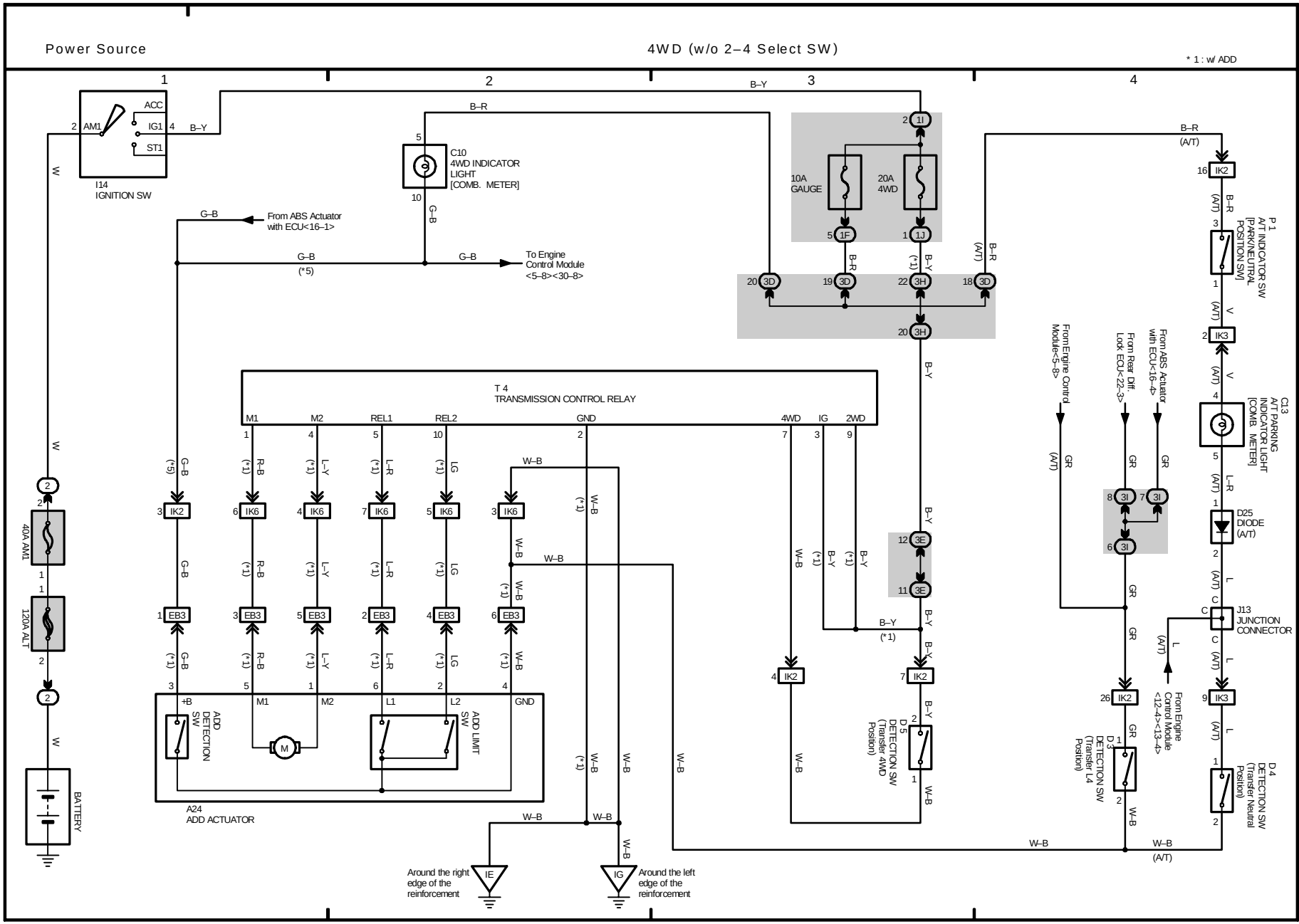
Power Source
4WD (w/o 2–4 Select SW)
* 1 : w/ ADD
1
2
3
4
ACC
AM1
IG1
ST1
I14
IGNITION SW
C10
4WD INDICATOR LIGHT [COMB. METER]
From ABS Actuator with ECU<16–1>
To Engine Control Module <5–8><30–8>
10A GAUGE
20A 4WD
T 4
TRANSMISSION CONTROL RELAY
M1
M2
REL1
REL2
GND
4WD
IG
2WD
40A AM1
120A ALT
BATTERY
A24
ADD ACTUATOR
+B
ADD DETECTION SW
ADD LIMIT SW
P 1
A/T INDICATOR SW [PARK/NEUTRAL POSITION SW]
C13
A/T PARKING INDICATOR LIGHT [COMB. METER]
D25
DIODE (A/T)
J13
JUNCTION CONNECTOR
D 4
DETECTION SW (Transfer Neutral Position)
D 5
DETECTION SW (Transfer 4WD Position)
D 3
DETECTION SW (Transfer L4 Position)
From Engine Control Module<5–8>
From Rear Diff. Lock ECU<22–3>
From ABS Actuator with ECU<16–4>
From Engine Control Module <12–4><13–4>
Around the right edge of the reinforcement
Around the left edge of the reinforcement
IE
IG

M OVERALL ELECTRICAL WIRING DIAGRAM

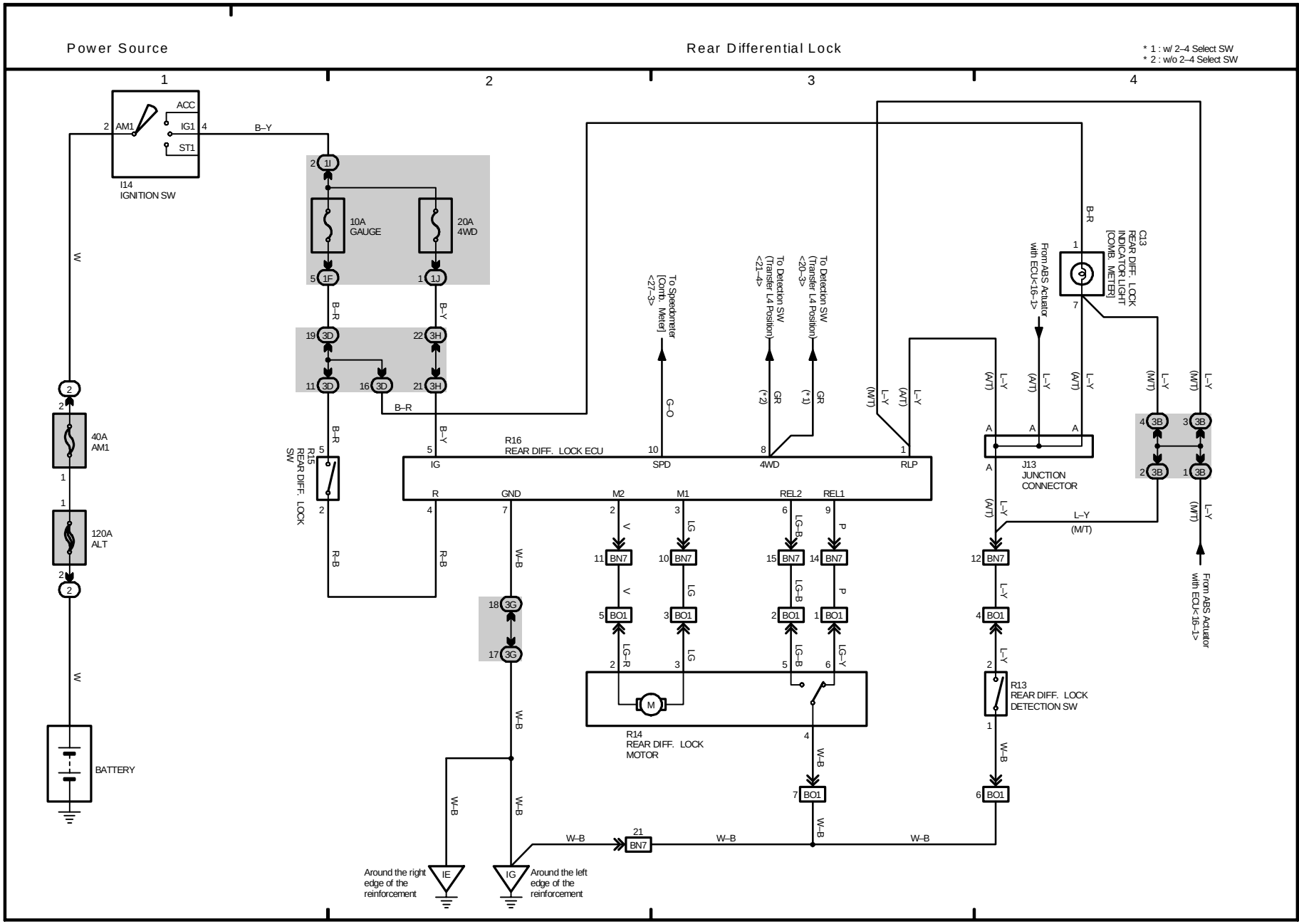
Power Source
Rear Differential Lock
* 1 : w/ 2–4 Select SW
* 2 : w/o 2–4 Select SW
1
2
3
4
ACC
AM1
IG1
ST1
I14
IGNITION SW
B–Y
10A
GAUGE
20A
4WD
B–R
B–Y
40A
AM1
120A
ALT
W
BATTERY
R15
REAR DIFF. LOCK
SW
R16
REAR DIFF. LOCK ECU
IG
SPD
4WD
RLP
R
GND
M2
M1
REL2
REL1
To Speedometer
[Comb. Meter]
<27–3>
To Detection SW
(Transfer L4 Position)
<21–4>
To Detection SW
(Transfer L4 Position)
<20–3>
G–O
GR
(*2)
(*1)
L–Y
(A/T)
(M/T)
From ABS Actuator
with ECU<16–1>
C13
REAR DIFF. LOCK
INDICATOR LIGHT
[COMB. METER]
J13
JUNCTION
CONNECTOR
R13
REAR DIFF. LOCK
DETECTION SW
R14
REAR DIFF. LOCK
MOTOR
W–B
R–B
V
LG
LG–B
P
LG–R
LG–Y
Around the right
edge of the
reinforcement
Around the left
edge of the
reinforcement
IE
IG

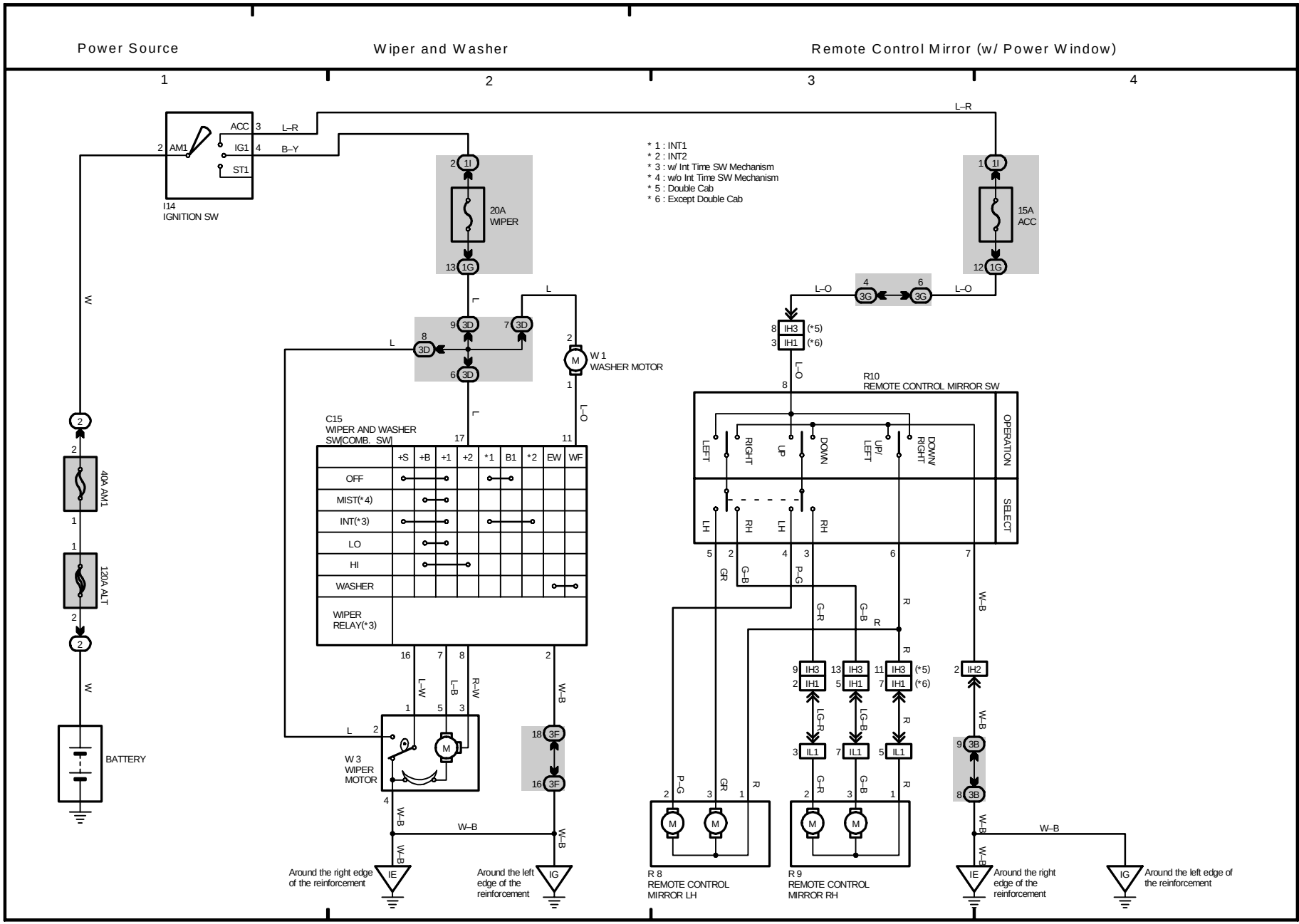
Power Source
Wiper and Washer
Remote Control Mirror (w/ Power Window)
1
2
3
4
* 1 : INT1
* 2 : INT2
* 3 : w/ Int Time SW Mechanism
* 4 : w/o Int Time SW Mechanism
* 5 : Double Cab
* 6 : Except Double Cab
I14
IGNITION SW
ACC
IG1
ST1
AM1
L–R
B–Y
20A
WIPER
15A
ACC
W 1
WASHER MOTOR
C15
WIPER AND WASHER
SW(COMB. SW)
+S
+B
+1
+2
*1
B1
*2
EW
WF
OFF
MIST(*4)
INT(*3)
LO
HI
WASHER
WIPER
RELAY(*3)
40A AM1
120A ALT
BATTERY
W 3
WIPER
MOTOR
R10
REMOTE CONTROL MIRROR SW
OPERATION
SELECT
LEFT
RIGHT
UP
DOWN
UP/
LEFT
DOWN/
RIGHT
LH
RH
R 8
REMOTE CONTROL
MIRROR LH
R 9
REMOTE CONTROL
MIRROR RH
Around the right edge
of the reinforcement
Around the left
edge of the
reinforcement
Around the right
edge of the
reinforcement
Around the left edge of
the reinforcement
IE
IG

M OVERALL ELECTRICAL WIRING DIAGRAM

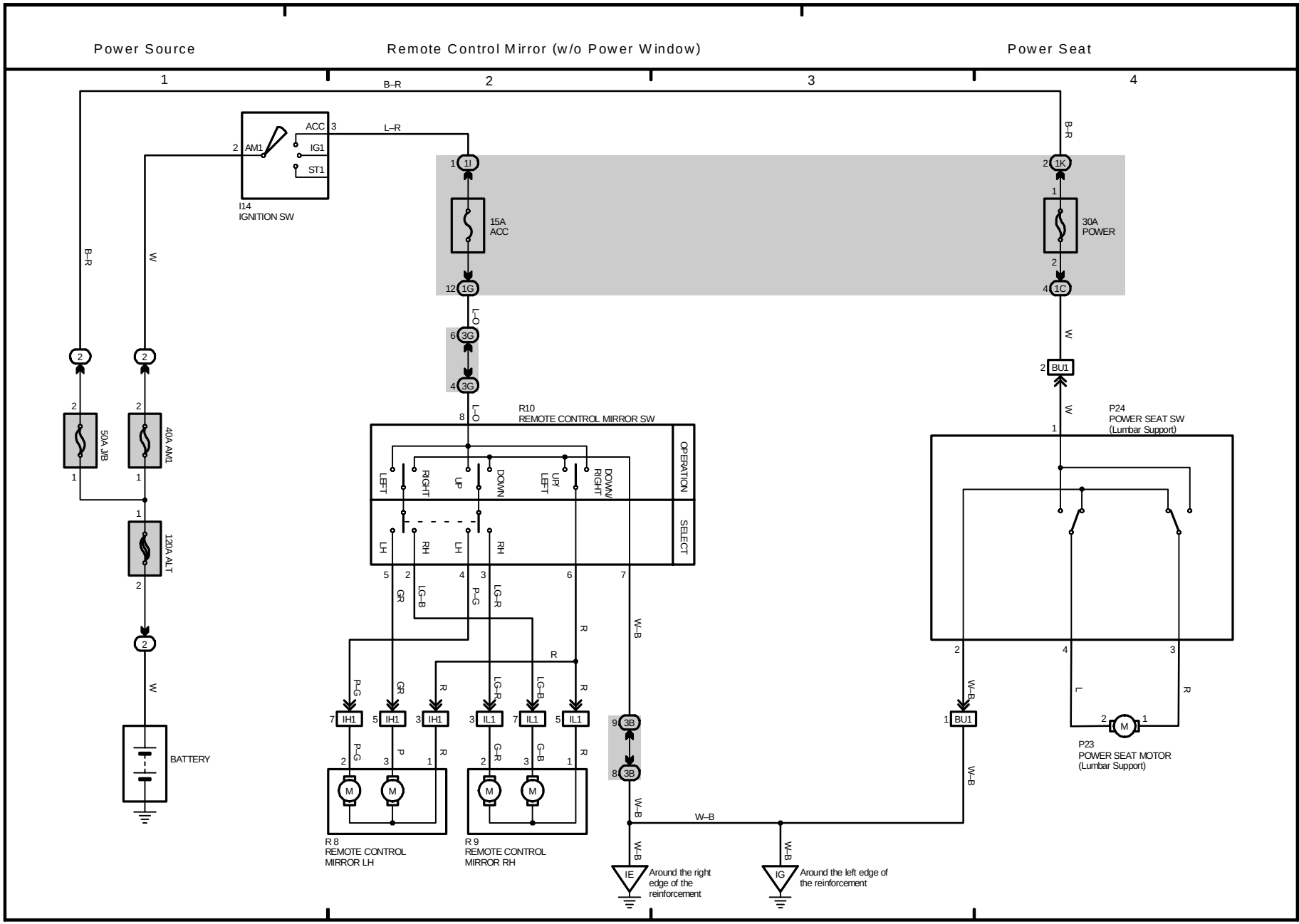
Power Source
Remote Control Mirror (w/o Power Window)
Power Seat
1
2
3
4
B–R
ACC
IG1
ST1
AM1
I14
IGNITION SW
L–R
15A
ACC
30A
POWER
1I
1K
1G
1C
3G
L–O
W
BU1
R10
REMOTE CONTROL MIRROR SW
OPERATION
SELECT
LEFT
RIGHT
UP
DOWN
UP/
LEFT
DOWN/
RIGHT
LH
RH
P24
POWER SEAT SW
(Lumbar Support)
50A J/B
40A AM1
120A ALT
BATTERY
GR
LG–B
P–G
LG–R
R
W–B
IH1
IL1
3B
P
G–R
G–B
L
M
R 8
REMOTE CONTROL
MIRROR LH
R 9
REMOTE CONTROL
MIRROR RH
P23
POWER SEAT MOTOR
(Lumbar Support)
IE
Around the right
edge of the
reinforcement
IG
Around the left edge of
the reinforcement

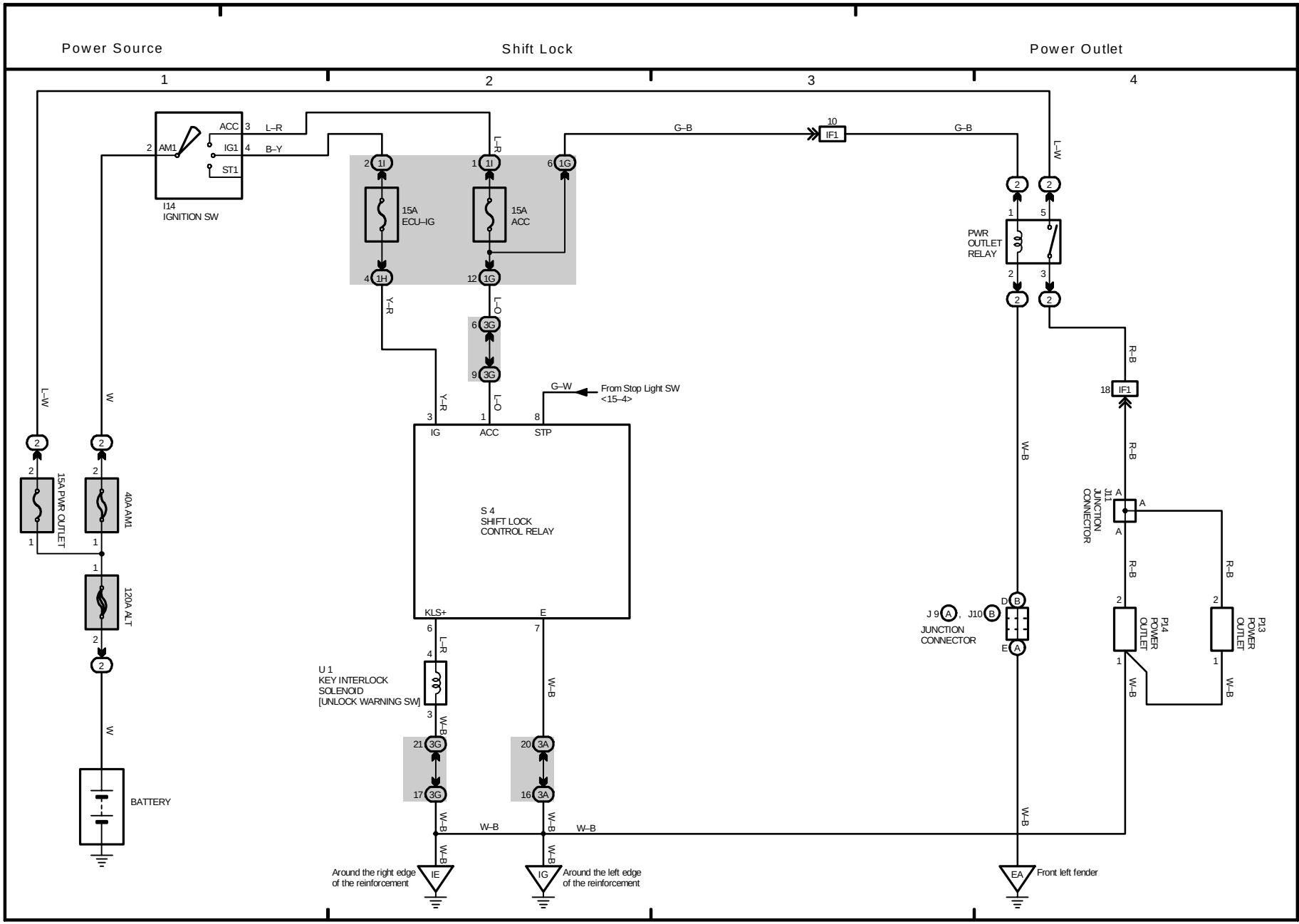
Power Source
Shift Lock
Power Outlet
1
2
3
4
ACC
IG1
ST1
AM1
L–R
B–Y
I14
IGNITION SW
15A
ECU–IG
15A
ACC
1I
1G
1H
3G
L–O
Y–R
G–B
IF1
L–W
W
R–B
W–B
G–W
From Stop Light SW
<15–4>
IG
ACC
STP
S 4
SHIFT LOCK
CONTROL RELAY
KLS+
E
U 1
KEY INTERLOCK
SOLENOID
[UNLOCK WARNING SW]
3A
W–B
PWR
OUTLET
RELAY
J11
JUNCTION
CONNECTOR
J 9
J10
JUNCTION
CONNECTOR
P14
POWER
OUTLET
P13
POWER
OUTLET
15A PWR OUTLET
40A AM1
120A ALT
BATTERY
Around the right edge
of the reinforcement
IE
IG
Around the left edge
of the reinforcement
EA
Front left fender

M OVERALL ELECTRICAL WIRING DIAGRAM

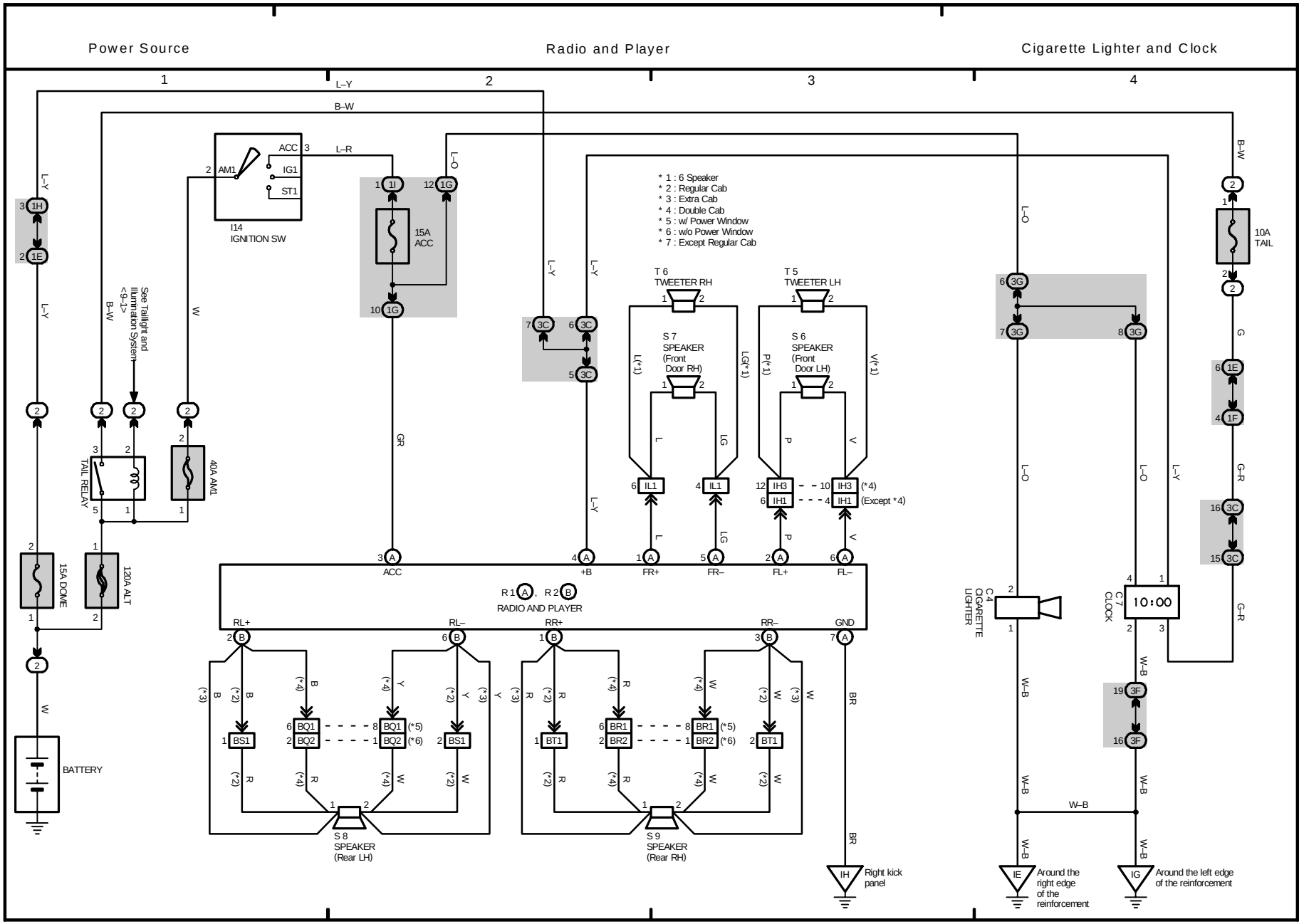
Power Source
Radio and Player
Cigarette Lighter and Clock
1
2
3
4
* 1 : 6 Speaker
* 2 : Regular Cab
* 3 : Extra Cab
* 4 : Double Cab
* 5 : w/ Power Window
* 6 : w/o Power Window
* 7 : Except Regular Cab
I14
IGNITION SW
ACC
IG1
ST1
AM1
15A ACC
10A TAIL
TAIL RELAY
40A AM1
15A DOME
120A ALT
BATTERY
See Taillight and Illumination System <9-1>
T 6 TWEETER RH
T 5 TWEETER LH
S 7 SPEAKER (Front Door RH)
S 6 SPEAKER (Front Door LH)
S 8 SPEAKER (Rear LH)
S 9 SPEAKER (Rear RH)
R 1 A, R 2 B
RADIO AND PLAYER
ACC
+B
FR+
FR–
FL+
FL–
RL+
RL–
RR+
RR–
GND
(Except *4)
C 4 CIGARETTE LIGHTER
C 7 CLOCK
10:00
IH Right kick panel
IE Around the right edge of the reinforcement
IG Around the left edge of the reinforcement

M OVERALL ELECTRICAL WIRING DIAGRAM

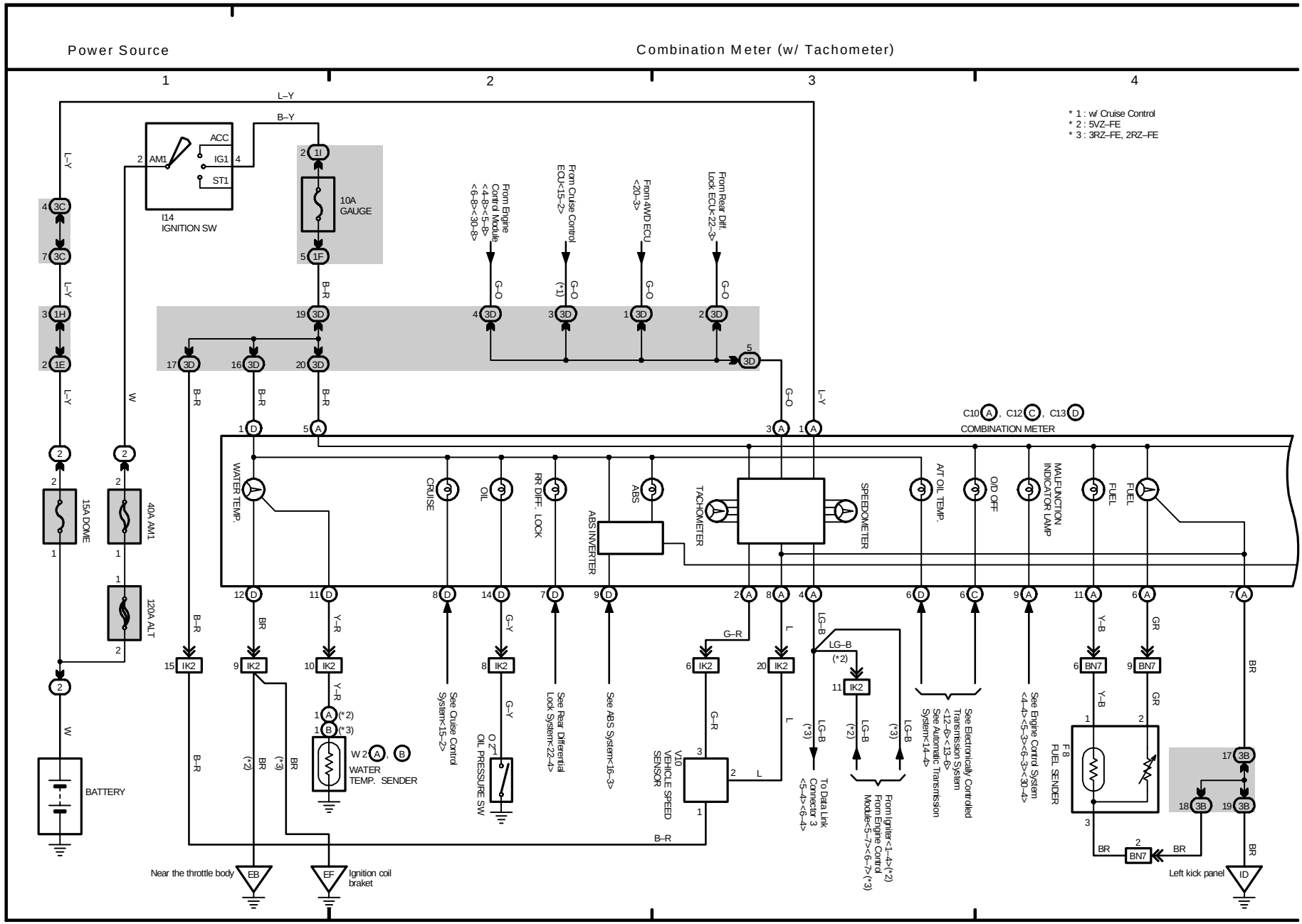
Power Source
Combination Meter (w/ Tachometer)
1
2
3
4
* 1 : w/ Cruise Control
* 2 : 5VZ–FE
* 3 : 3RZ–FE, 2RZ–FE
I14
IGNITION SW
ACC
AM1
IG1
ST1
10A
GAUGE
15A DOME
40A AM1
120A ALT
BATTERY
From Engine Contrd Module <4–8><5–8><6–8><30–8>
From Cruise Control ECU<15–2>
From 4WD ECU <20–3>
From Rear Diff. Lock ECU<22–3>
C10 A , C12 C , C13 D
COMBINATION METER
WATER TEMP.
CRUISE
OIL
RR DIFF. LOCK
ABS
ABS INVERTER
TACHOMETER
SPEEDOMETER
A/T OIL TEMP.
O/D OFF
MALFUNCTION INDICATOR LAMP
FUEL
FUEL
W 2 A , B
WATER TEMP. SENDER
See Cruise Control System<15–2>
See Rear Differential Lock System<22–4>
See ABS System<16–3>
V10
VEHICLE SPEED SENSOR
To Data Link Connector 3 <5–4><6–4>
From Igniter<1–4>(*2) From Engine Contrd Module<5–7><6–7>(*3)
See Electronically Controlled Transmission System <12–6><13–6> See Automatic Transmission System<14–4>
See Engine Control System <4–4><5–3><6–3><30–4>
F 8
FUEL SENDER
Near the throttle body
EB
EF
Ignition coil braket
Left kick panel
ID

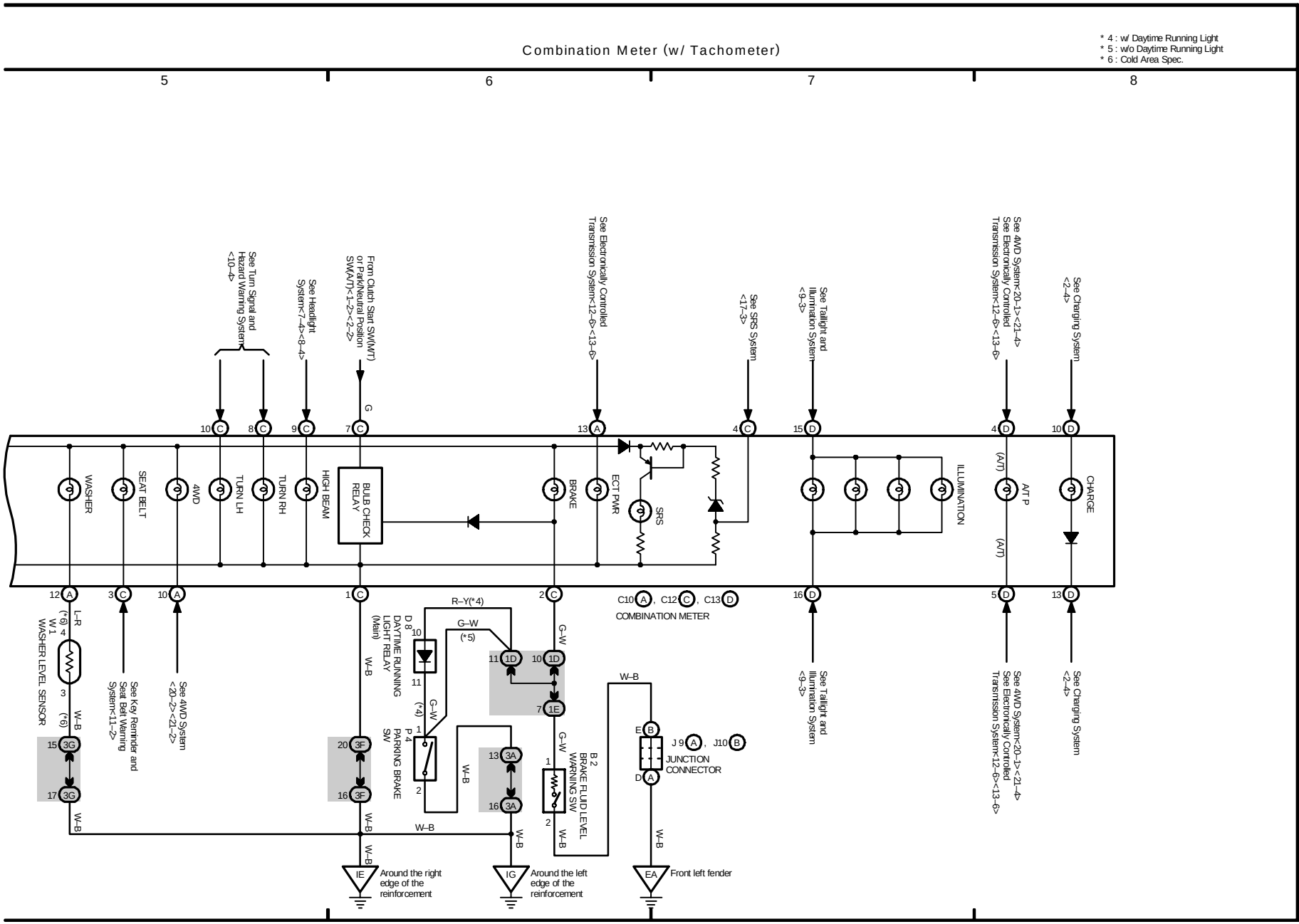
Combination Meter (w/ Tachometer)
* 4 : w/ Daytime Running Light
* 5 : w/o Daytime Running Light
* 6 : Cold Area Spec.
5
6
7
8
See Turn Signal and Hazard Warning System <10–4>
See Headlight System<7–4><8–4>
From Clutch Start SW(M/T) or Park/Neutral Position SW(A/T)<1–2><2–2>
See Electronically Controlled Transmission System<12–6><13–6>
See SRS System <17–3>
See Taillight and Illumination System <9–3>
See 4WD System<20–1><21–4>
See Electronically Controlled Transmission System<12–6><13–6>
See Charging System <2–4>
WASHER
SEAT BELT
4WD
TURN LH
TURN RH
HIGH BEAM
BULB CHECK RELAY
BRAKE
ECT PWR
SRS
ILLUMINATION
A/T P
CHARGE
(A/T)
C10 A , C12 C , C13 D
COMBINATION METER
WASHER LEVEL SENSOR
See Key Reminder and Seat Belt Warning System<11–2>
See 4WD System <20–2><21–2>
DAYTIME RUNNING LIGHT RELAY (Main)
PARKING BRAKE SW
BRAKE FLUID LEVEL WARNING SW
JUNCTION CONNECTOR
J 9 A , J10 B
See Taillight and Illumination System <9–3>
See 4WD System<20–1><21–4>
See Electronically Controlled Transmission System<12–6><13–6>
See Charging System <2–4>
Around the right edge of the reinforcement
Around the left edge of the reinforcement
Front left fender

M OVERALL ELECTRICAL WIRING DIAGRAM

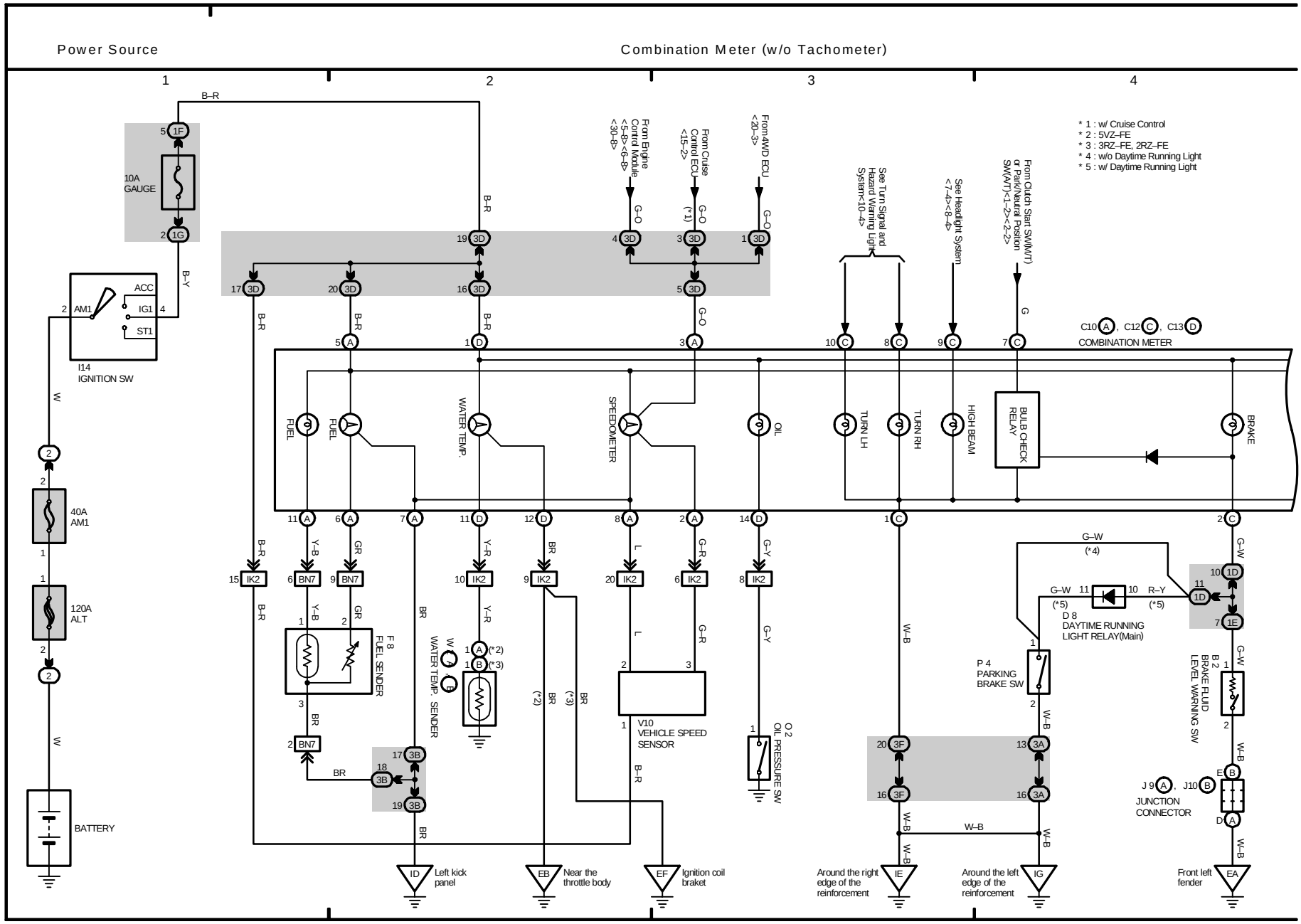
Power Source
Combination Meter (w/o Tachometer)
1
2
3
4
* 1 : w/ Cruise Control
* 2 : 5VZ–FE
* 3 : 3RZ–FE, 2RZ–FE
* 4 : w/o Daytime Running Light
* 5 : w/ Daytime Running Light
10A GAUGE
I14 IGNITION SW
ACC
IG1
ST1
AM1
40A AM1
120A ALT
BATTERY
From Engine Control Module <5-8><6-8><30-8>
From Cruise Control ECU <15-2>
From 4WD ECU <20-3>
See Turn Signal and Hazard Warning Light System<10-4>
See Headlight System <7-4><8-4>
From Clutch Start SW(M/T) or Park/Neutral Position SW(A/T)<1-2><2-2>
C10 A , C12 C , C13 D
COMBINATION METER
FUEL
FUEL
WATER TEMP.
SPEEDOMETER
OIL
TURN LH
TURN RH
HIGH BEAM
BULB CHECK RELAY
BRAKE
F 8 FUEL SENDER
W 2 WATER TEMP. SENDER
V10 VEHICLE SPEED SENSOR
O 2 OIL PRESSURE SW
D 8 DAYTIME RUNNING LIGHT RELAY(Main)
P 4 PARKING BRAKE SW
B 2 BRAKE FLUID LEVEL WARNING SW
J 9 A , J10 B
JUNCTION CONNECTOR
Left kick panel
Near the throttle body
Ignition coil braket
Around the right edge of the reinforcement
Around the left edge of the reinforcement
Front left fender

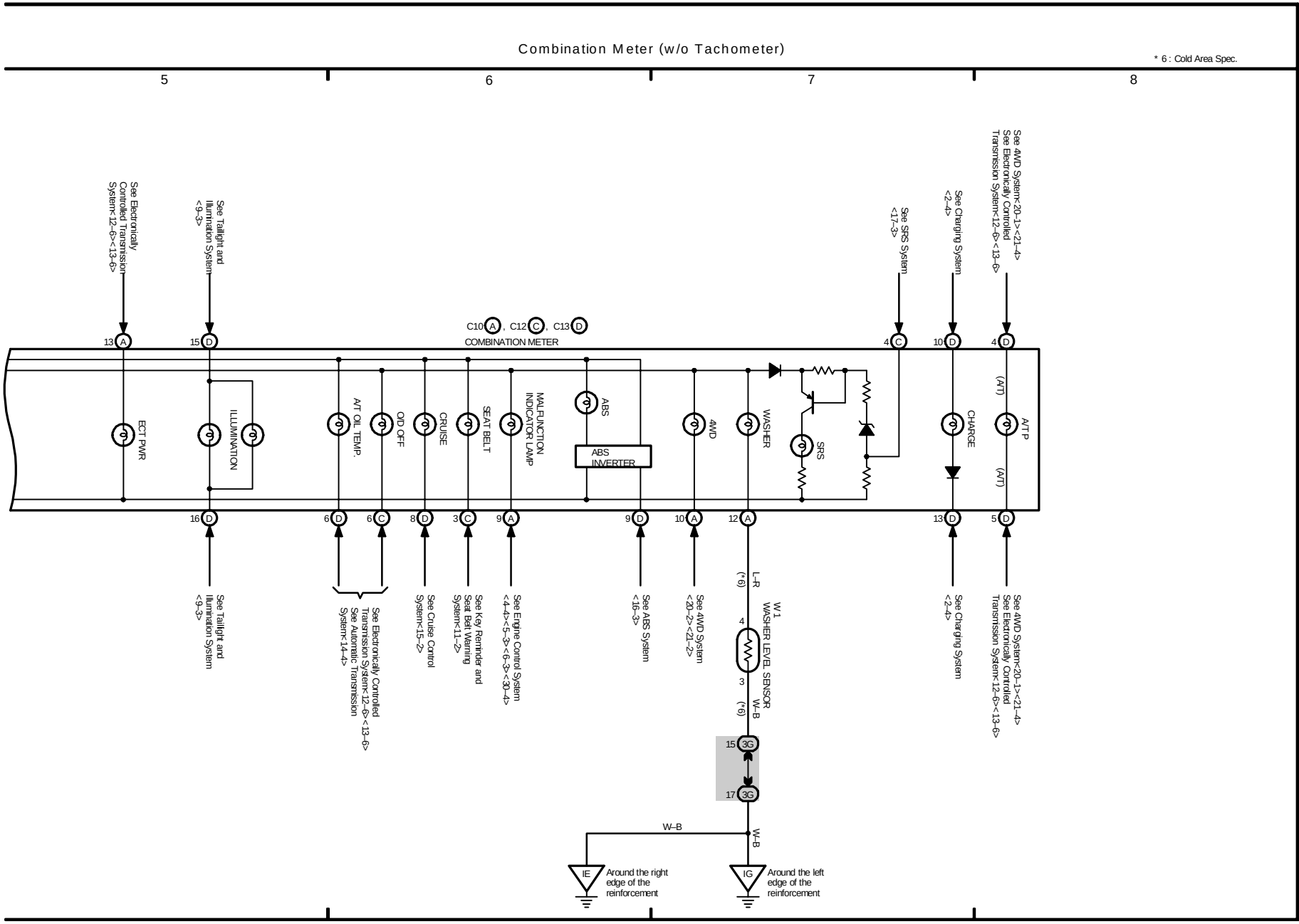
Combination Meter (w/o Tachometer)
* 6 : Cold Area Spec.
5
6
7
8
See Electronically Controlled Transmission System<12–6><13–6>
See Taillight and Illumination System <9–3>
C10 A , C12 C , C13 D
COMBINATION METER
See SRS System <17–3>
See Charging System <2–4>
See 4WD System<20–1><21–4>
See Electronically Controlled Transmission System<12–6><13–6>
13 A
15 D
4 C
10 D
4 D
ECT PWR
ILLUMINATION
A/T OIL TEMP.
O/D OFF
CRUISE
SEAT BELT
MALFUNCTION INDICATOR LAMP
ABS
ABS INVERTER
4WD
WASHER
SRS
CHARGE
A/T P
(A/T)
(A/T)
16 D
6 D
6 C
8 D
3 C
9 A
9 D
10 A
12 A
13 D
5 D
See Taillight and Illumination System <9–3>
See Electronically Controlled Transmission System<12–6><13–6> See Automatic Transmission System<14–4>
See Cruise Control System<15–2>
See Key Reminder and Seat Belt Warning System<11–2>
See Engine Control System <4–4><5–3><6–3><30–4>
See ABS System <16–3>
See 4WD System <20–2><21–2>
L–R
(*6)
4
3
(*6)
W–B
W1
WASHER LEVEL SENSOR
See Charging System <2–4>
See 4WD System<20–1><21–4> See Electronically Controlled Transmission System<12–6><13–6>
15 3G
17 3G
W–B
W–B
IE
Around the right edge of the reinforcement
IG
Around the left edge of the reinforcement

M OVERALL ELECTRICAL WIRING DIAGRAM

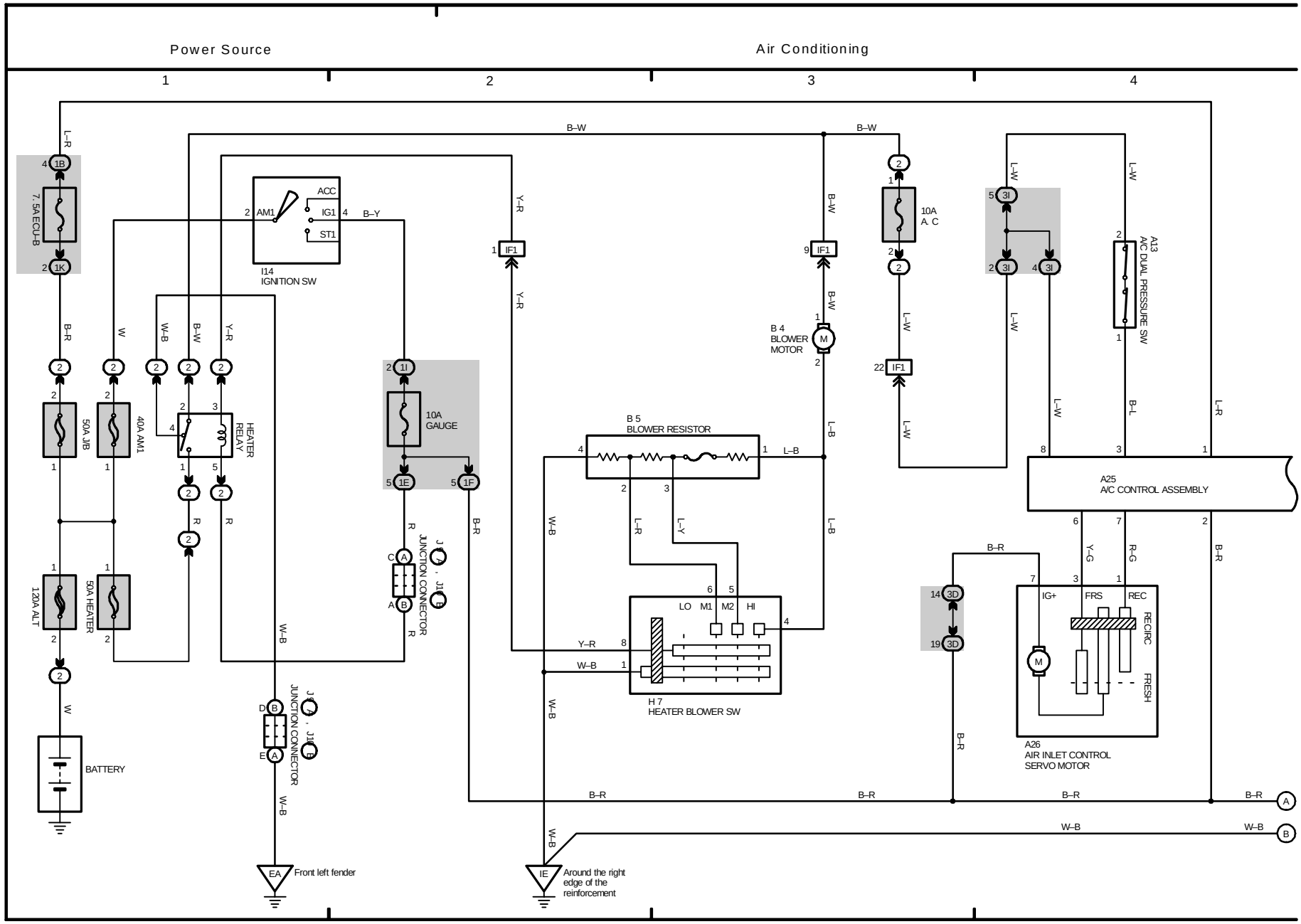
Power Source
Air Conditioning
1
2
3
4
7.5A ECU-B
50A J/B
40A AM1
120A ALT
50A HEATER
HEATER RELAY
10A GAUGE
10A A/C
ACC
IG1
ST1
AM1
I14 IGNITION SW
B 4 BLOWER MOTOR
B 5 BLOWER RESISTOR
H 7 HEATER BLOWER SW
LO M1 M2 HI
A13 A/C DUAL PRESSURE SW
A25 A/C CONTROL ASSEMBLY
A26 AIR INLET CONTROL SERVO MOTOR
IG+ FRS REC RECIRC FRESH
BATTERY
JUNCTION CONNECTOR
EA Front left fender
IE Around the right edge of the reinforcement

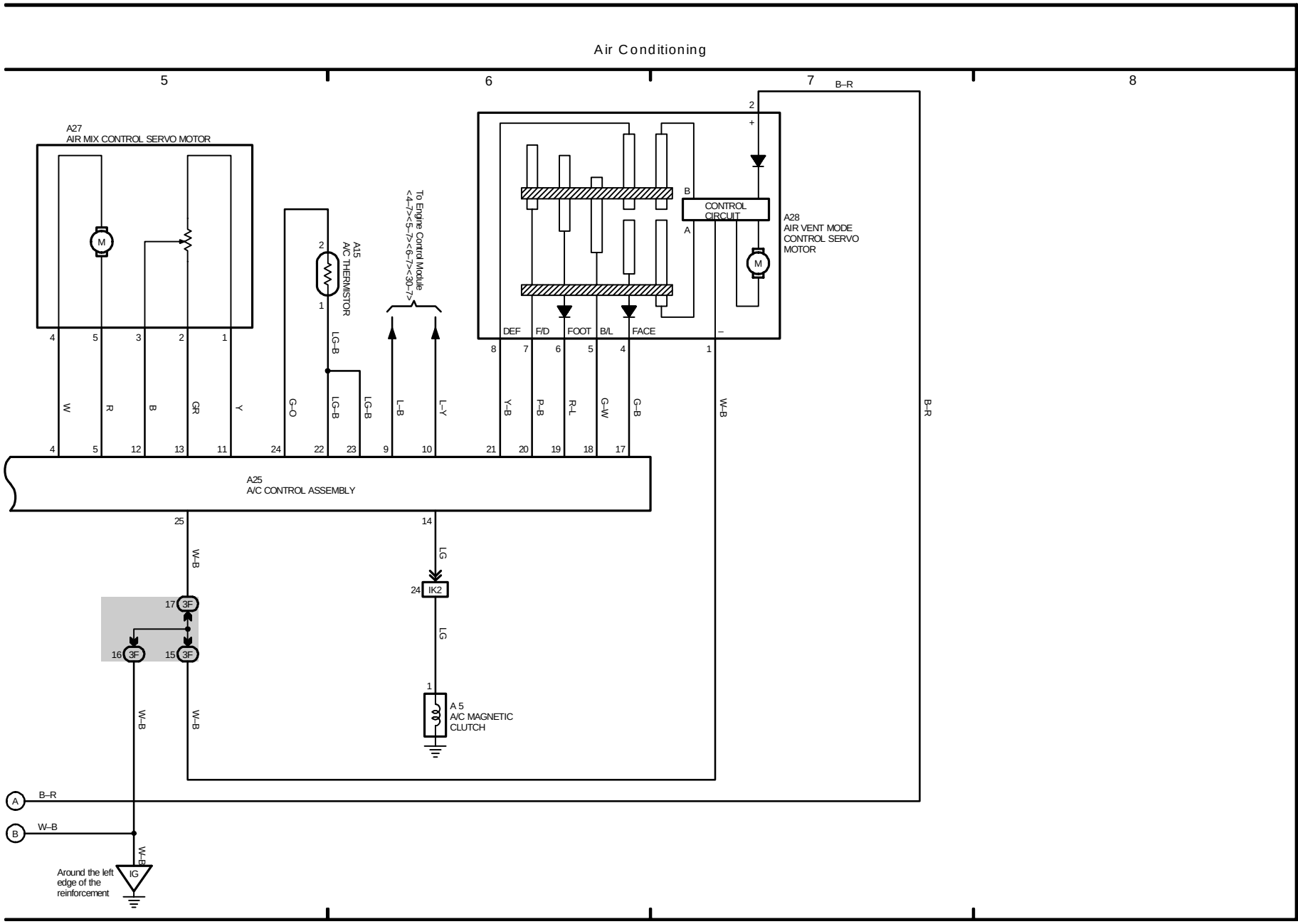
Air Conditioning
5
6
7
8
A27
AIR MIX CONTROL SERVO MOTOR
M
4
5
3
2
1
W
R
B
GR
Y
A15
A/C THERMISTOR
2
1
LG–B
G–O
LG–B
LG–B
To Engine Control Module
<4–7><5–7><6–7><30–7>
L–B
L–Y
B–R
2
+
B
CONTROL
CIRCUIT
A
A28
AIR VENT MODE
CONTROL SERVO
MOTOR
M
DEF
F/D
FOOT
B/L
FACE
–
8
7
6
5
4
1
Y–B
P–B
R–L
G–W
G–B
W–B
B–R
4
5
12
13
11
24
22
23
9
10
21
20
19
18
17
A25
A/C CONTROL ASSEMBLY
25
14
W–B
LG
24
IK2
LG
17
3F
16
3F
15
3F
1
A 5
A/C MAGNETIC
CLUTCH
W–B
W–B
A
B–R
B
W–B
W–B
Around the left
edge of the
reinforcement
IG

M OVERALL ELECTRICAL WIRING DIAGRAM

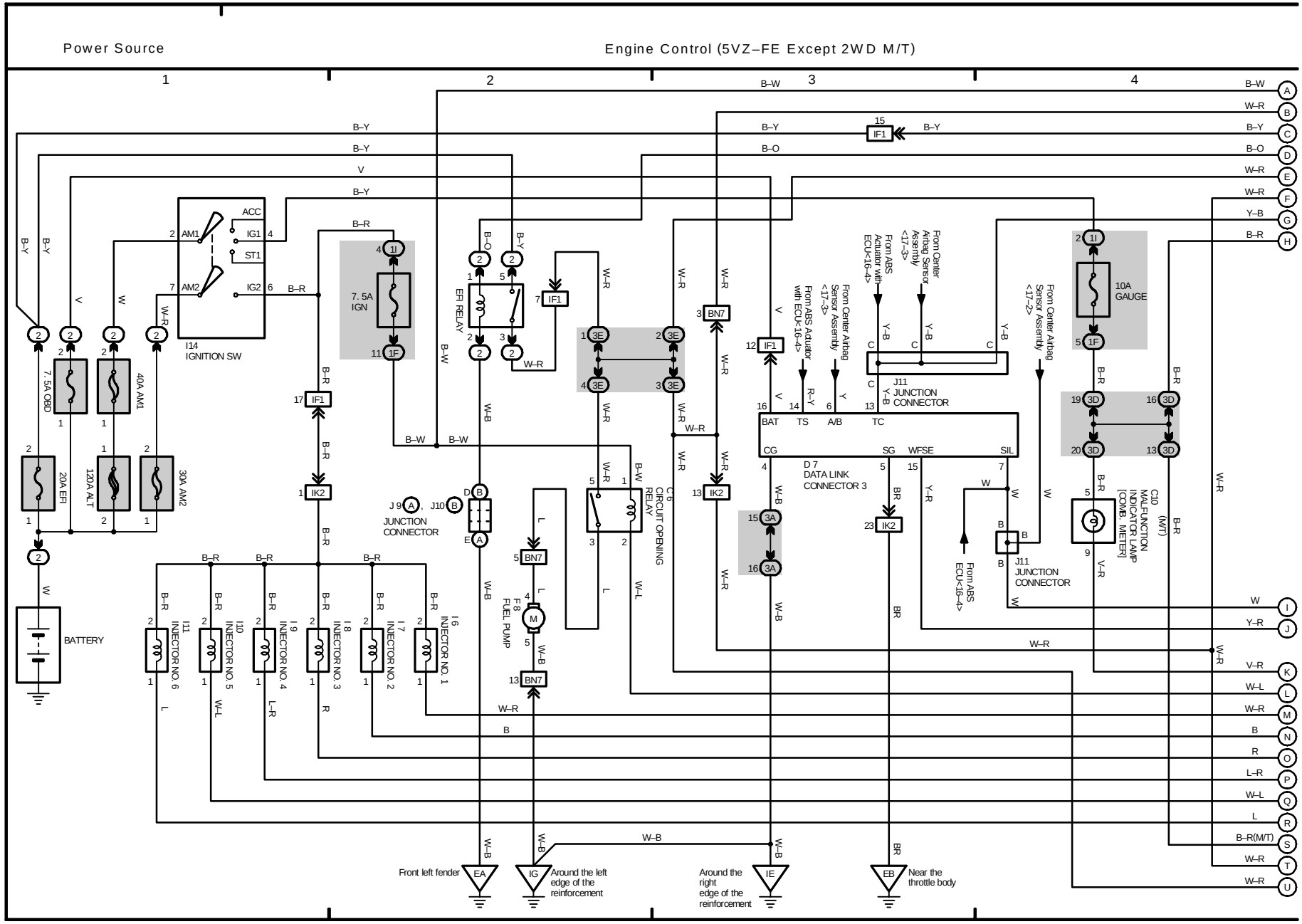
Power Source
Engine Control (5VZ–FE Except 2WD M/T)
1
2
3
4
BATTERY
ACC
IG1
ST1
IG2
AM1
AM2
I14
IGNITION SW
7. 5A
IGN
EFI RELAY
7. 5A CBD
40A AM1
20A EFI
120A ALT
30A AM2
J9
J10
JUNCTION
CONNECTOR
CIRCUIT OPENING
RELAY
C5
F8
FUEL PUMP
INJECTOR NO. 1
INJECTOR NO. 2
INJECTOR NO. 3
INJECTOR NO. 4
INJECTOR NO. 5
INJECTOR NO. 6
From ABS
Actuator with
ECU<16-4>
From Center
Airbag Sensor
Assembly
<17–3>
From ABS Actuator
with ECU<16-4>
From Center Airbag
Sensor Assembly
<17–3>
From Center Airbag
Sensor Assembly
<17–2>
J11
JUNCTION
CONNECTOR
BAT
TS
A/B
TC
CG
SG
WFSE
SIL
D 7
DATA LINK
CONNECTOR 3
From ABS
ECU<16-4>
10A
GAUGE
C10
MALFUNCTION
INDICATOR LAMP
[COMB. METER]
(M/T)
Front left fender
EA
Around the left
edge of the
reinforcement
IG
Around the
right
edge of the
reinforcement
IE
Near the
throttle body
EB

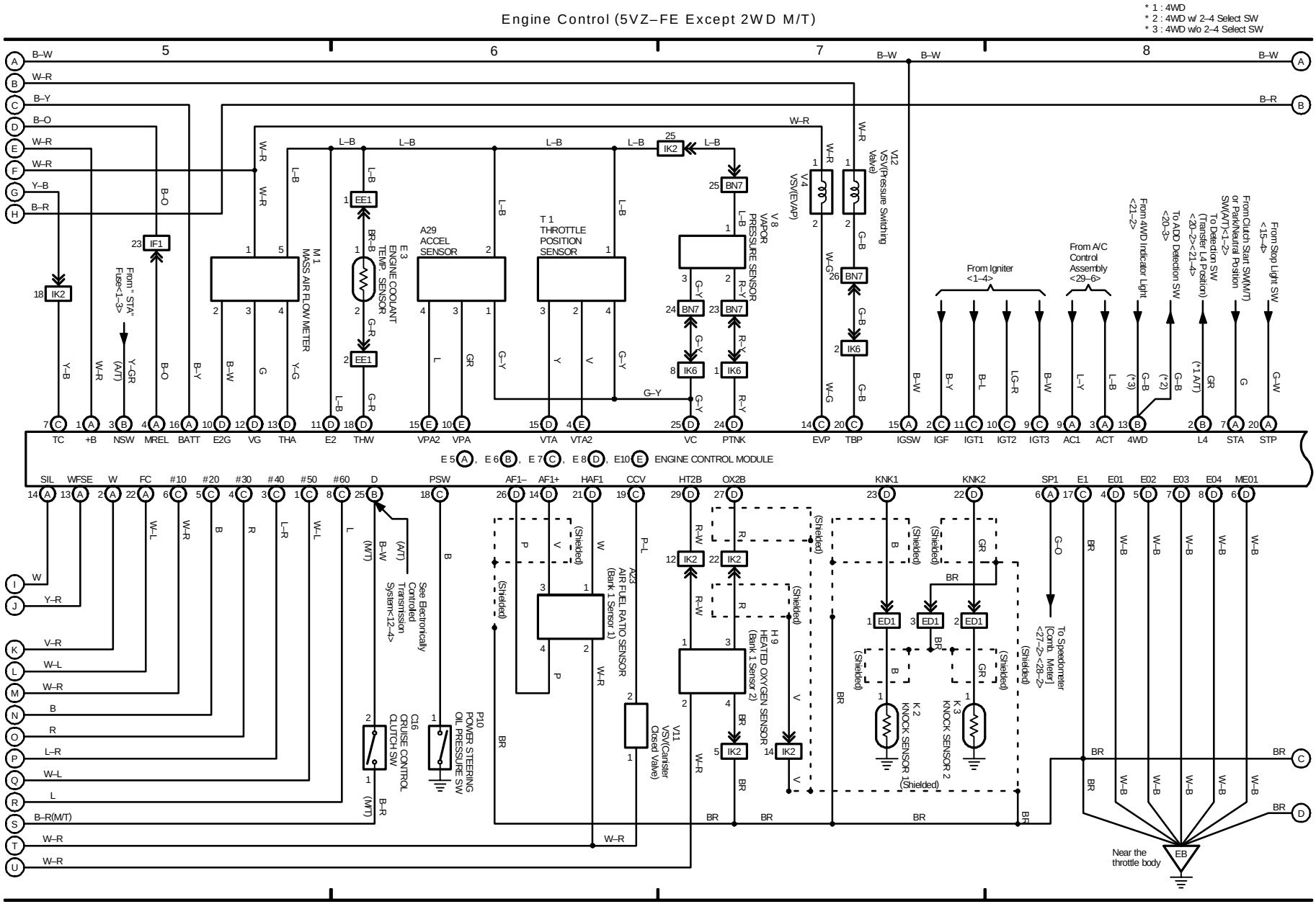
Engine Control (5VZ–FE Except 2WD M/T)
* 1 : 4WD
* 2 : 4WD w/ 2–4 Select SW
* 3 : 4WD w/o 2–4 Select SW
M 1 MASS AIR FLOW METER
E 3 ENGINE COOLANT TEMP. SENSOR
A29 ACCEL SENSOR
T 1 THROTTLE POSITION SENSOR
V 8 VAPOR PRESSURE SENSOR
V 4 VSV(EVAP)
V12 VSV(Pressure Switching Valve)
From Igniter <1–4>
From A/C Control Assembly <29–6>
From 4WD Indicator Light <21–2>
To ADD Detection SW <20–3>
To Detection SW (Transfer L4 Position) <20–2><21–4>
From Clutch Start SW(M/T) or Park/Neutral Position SW(A/T)<1–2>
From Stop Light SW <15–4>
From " STA" Fuse<1–3>
E 5 A , E 6 B , E 7 C , E 8 D , E10 E ENGINE CONTROL MODULE
TC +B NSW MREL BATT E2G VG THA E2 THW VPA2 VPA VTA VTA2 VC PTNK EVP TBP IGSW IGF IGT1 IGT2 IGT3 AC1 ACT 4WD L4 STA STP
SIL WFSE W FC #10 #20 #30 #40 #50 #60 D PSW AF1– AF1+ HAF1 CCV HT2B OX2B KNK1 KNK2 SP1 E1 E01 E02 E03 E04 ME01
K 2 KNOCK SENSOR 1
K 3 KNOCK SENSOR 2
A23 AIR FUEL RATIO SENSOR (Bank 1 Sensor 1)
H 9 HEATED OXYGEN SENSOR (Bank 1 Sensor 2)
V11 VSV(Canister Closed Valve)
P10 POWER STEERING OIL PRESSURE SW
C16 CRUISE CONTROL CLUTCH SW
See Electronically Controlled Transmission System<12–4>
To Speedometer [Comb. Meter] <27–2><28–2>
Near the throttle body
EB

M OVERALL ELECTRICAL WIRING DIAGRAM

Cruise Control (5VZ–FE Except 2WD M/T)

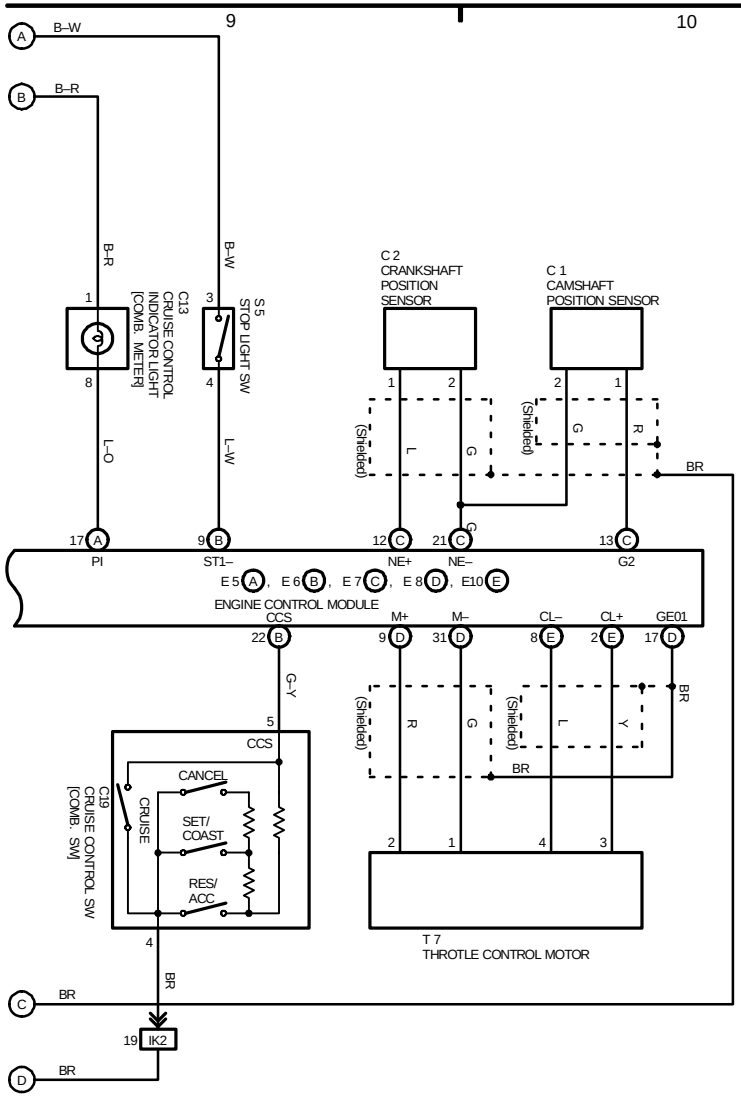

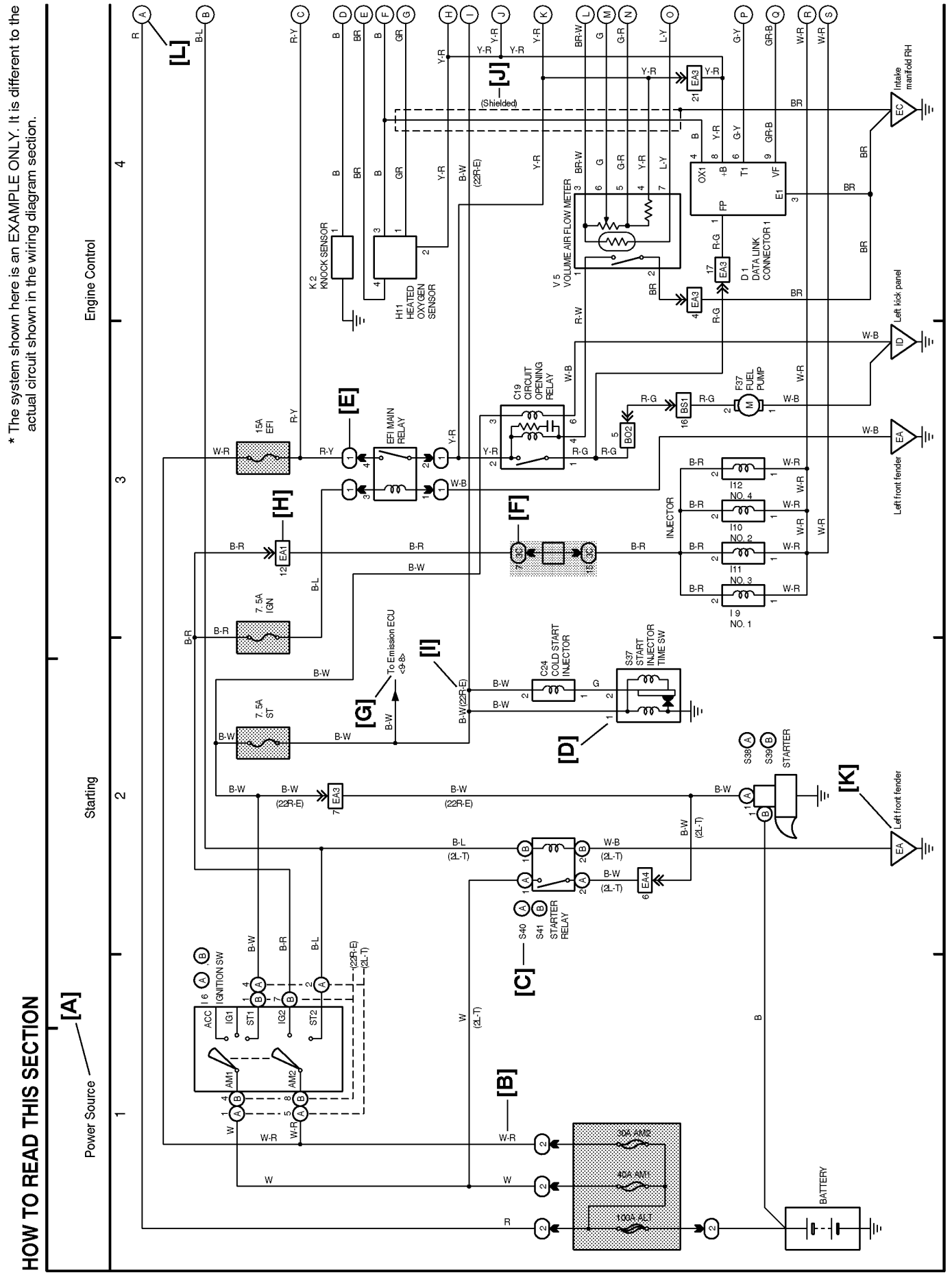
* The system shown here is an EXAMPLE ONLY. It is different to the actual circuit shown in the wiring diagram section.
HOW TO READ THIS SECTION
[A]
Power Source
Starting
Engine Control
[B]
[C]
[D]
[E]
[F]
[G]
[H]
[I]
[J]
[K]
[L]
K2 KNOCK SENSOR
H11 HEATED OXYGEN SENSOR
V5 VOLUME AIR FLOW METER
D1 DATA LINK CONNECTOR 1
C19 CIRCUIT OPENING RELAY
F37 FUEL PUMP
EFI MAIN RELAY
15A EFI
7.5A IGN
7.5A ST
INJECTOR
I12 NO. 4
I10 NO. 2
I11 NO. 3
I9 NO. 1
C24 COLD START INJECTOR
S37 START INJECTOR TIME SW
To Emission ECU <9-8>
STARTER
S38
S39
S40
S41
STARTER RELAY
IGNITION SW
ACC
IG1
ST1
IG2
ST2
AM1
AM2
30A AM2
40A AM1
100A ALT
BATTERY
Intake manifold RH
Left kick panel
Left front fender
Left front fender
(Shielded)
(22R-E)
(2L-T)

[A] : System Title

[B] : Indicates the wiring color.

Wire colors are indicated by an alphabetical code.

B	= Black	W	= White	BR	= Brown
L	= Blue	V	= Violet	SB	= Sky Blue
R	= Red	O	= Orange	LG	= Light Green
P	= Pink	Y	= Yellow	GR	= Gray
G	= Green				

The first letter indicates the basic wire color and the second letter indicates the color of the stripe.

Example: L – Y

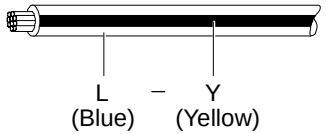

[C] : The position of the parts is the same as shown in the wiring diagram and wire routing.

[D] : Indicates the pin number of the connector. The numbering system is different for female and male connectors.

Example : Numbered in order from upper left to lower right / Numbered in order from upper right to lower left

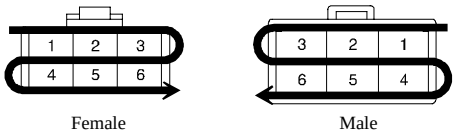

The numbering system for the overall wiring diagram is the same as above

[E] : Indicates a Relay Block. No shading is used and only the Relay Block No. is shown to distinguish it from the J/B.

Example : (1) Indicates Relay Block No.1

[F] : Junction Block (The number in the circle is the J/B No. and the connector code is shown beside it). Junction Blocks are shaded to clearly separate them from other parts.

Example:

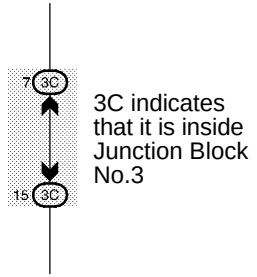

[G] : Indicates related system.

[H] : Indicates the wiring harness and wiring harness connector. The wiring harness with male terminal is shown with arrows (»). Outside numerals are pin numbers.

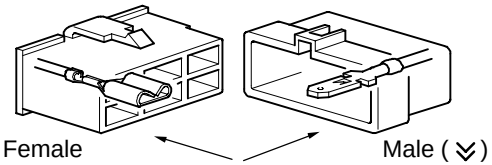

[I] : ( ) is used to indicate different wiring and connector, etc. when the vehicle model, engine type, or specification is different.

[J] : Indicates a shielded cable.



[K] : Indicates and located on ground point.

[L] : The same code occuring on the next page indicates that the wire harness is continuous.

SYSTEM INDEX

SYSTEMS	LOCATION
ABS	16–2
Air Conditioning	29–2
Automatic Transmission (2RZ–FE)	14–2
Back–Up Light	17–4
Charging	2–4
Cigarette Lighter	26–4
Clock	26–4
Combination Meter (w/ Tachometer)	27–2
Combination Meter (w/o Tachometer)	28–2
Cruise Control (5VZ–FE Except 2WD M/T)	30–9
Cruise Control (5VZ–FE 2WD M/T, 3RZ–FE, 2RZ–FE)	15–2
Door Lock Control	18–2
Electronically Controlled Transmission (3RZ–FE)	13–2
Electronically Controlled Transmission (5VZ–FE)	12–2
Engine Control (2RZ–FE)	6–2
Engine Control (3RZ–FE)	5–2
Engine Control (5VZ–FE(Except 2WD M/T))	30–2
Engine Control (5VZ–FE(2WD M/T))	4–2
Headlight (w/ Daytime Running Light)	8–2
Headlight (w/o Daytime Running Light)	7–2
Horn	10–4
Ignition (3RZ–FE, 2RZ–FE)	3–2
Ignition (5VZ–FE)	1–4

SYSTEMS	LOCATION
Illumination	9–2
Interior Light	11–4
Key Reminder	11–2
Light Auto Turn Off	11–3
Power Outlet	25–4
Power Seat	24–4
Power Source	1~30–1
Power Window	19–2
Radio and Player	26–2
Rear Differential Lock	22–2
Remote Control Mirror (w/ Power Window)	23–3
Remote Control Mirror (w/o Power Window)	24–2
Seat Belt Warning	11–2
Shift Lock	25–2
SRS	17–2
Starting (3RZ–FE, 2RZ–FE)	2–2
Starting (5VZ–FE)	1–2
Stop Light	15–4
Taillight	9–2
Turn Signal and Hazard Warning Light	10–2
Wiper and Washer	23–2
4WD (w/ 2–4 Select SW)	20–2
4WD (w/o 2–4 Select SW)	21–2

L PART NUMBER OF CONNECTORS

Code	Part Name	Part Number
A 5	A/C Magnetic Clutch	90980–11271
A 7	A/T Oil Temp. Sensor	90980–10498
A 9	ABS Deceleration Sensor	90980–10845
A13	A/C Dual Pressure SW	90980–10825
A15	A/C Thermistor	90980–10860
A18	Airbag Squib (Steering Wheel Pad)	90980–10850
A19	Ashtray Illumination	81945–33010
A21	Airbag Squib (Front Passenger Airbag Assembly)	90980–11884
A22	ABS Actuator with ECU	90980–12020
A23	Air Fuel Ratio Sensor (Bank 1 Sensor 1)	90980–11178
A24	ADD Actuator	90980–11858
A25	A/C Control Assembly	90980–11877
A26	Air Inlet Control Servo Motor	90980–11165
A27	Air Mix Control Servo Motor	90980–10789
A28	Air Vent Mode Control Servo Motor	90980–11321
A29	Accel Position Sensor	90980–11150
B 1	Back–Up Light SW	90980–11250
B 2	Brake Fluid Level Warning SW	90980–11207
B 4	Blower Motor	90980–10214
B 5	Blower Resistor	90980–10171
B 6	Buckle SW LH	90980–10859
C 1	Camshaft Position Sensor	90980–10947
C 2	Crankshaft Position Sensor (3RZ–FE, 2RZ–FE)	90980–11016
	Crankshaft Position Sensor (5VZ–FE)	90980–10947
C 3	Cruise Control Actuator	90980–11150
C 4	Cigarette Lighter	90980–10760
C 5	Cigarette Lighter Illumination	90980–11148
C 6	Circuit Opening Relay	82602–35150
C 7	Clock	90980–11013
C 8	Clutch Start Cancel SW	90980–11533
C 9	Clutch Start SW	90980–10825
C10	Combination Meter	90980–11115
C12	Combination Meter	90980–11114
C13	Combination Meter	90980–11113
C14	Combination SW	90980–11672
C15	Combination SW	90980–11594
C16	Cruise Control Clutch SW	90980–10906
C17	Cruise Control ECU	90980–11391
C19	Combination SW	90980–11616
C20	Center Airbag Sensor Assembly	90980–11871
C21	Center Airbag Sensor Assembly	90980–11872
C22	Center Airbag Sensor Assembly	90980–11873
D 3	Detection SW (Transfer L4 Position)	90980–11156
D 4	Detection SW (Transfer Neutral Position)	90980–10923

Code	Part Name	Part Number
D 5	Detection SW (Transfer 4WD Position) (w/ 2–4 Select SW)	90980–11250
	Detection SW (Transfer 4WD Position) (w/o 2–4 Select SW)	90980–11156
D 7	Data Link Connector 3	90080–98010
D 8	Daytime Running Light Relay (Main)	90980–12034
D 9	Daytime Running Light Relay No.4	82602–35160
D13	Diode (Daytime Running Light System)	90980–10962
D15	Door Courtesy SW Front LH	90980–10433
D16	Door Courtesy SW Front RH	
D20	Door Lock Control SW RH	90980–11013
D21	Door Lock Motor, Door Unlock Detection SW and Door Key Lock and Unlock SW Front LH	90980–10897
D22	Door Lock Motor, Door Unlock Detection SW and Door Key Lock and Unlock SW Front RH	
D25	Diode (A/T)	90980–10962
D26	Door Courtesy SW Rear LH	90980–10433
D27	Door Courtesy SW Rear RH	
D28	Door Lock Motor Rear LH	90980–11019
D29	Door Lock Motor Rear RH	
D30	Diode (ABS)	90980–10962
E 1	EGR Gas Temp. Sensor	90980–10899
E 2	Electronically Controlled Transmission Solenoid (Ex.5VZ–FE)	90980–10919
	Electronically Controlled Transmission Solenoid (5VZ–FE)	90980–10891
E 3	Engine Coolant Temp. Sensor	90980–10737
E 4	Electronically Controlled Transmission Pattern Select SW	90980–10601
E 5	Engine Control Module	90980–11638
E 6	Engine Control Module	90980–11637
E 7	Engine Control Module	90980–11476
E 8	Engine Control Module	90980–11421
E10	Engine Control Module	90980–11586
F 1	Front ABS Speed Sensor LH	90980–11075
F 2	Front ABS Speed Sensor RH	
F 3	Front Turn Signal Light LH	90980–11020
F 4	Front Turn Signal Light RH	
F 6	4WD ECU	90980–11423
F 8	Fuel Pump and Sender	90980–11077
F 9	Front Airbag Sensor LH	90980–11898
F10	Front Airbag Sensor RH	
F11	Fuse box	82610–35020
G 1	Generator	90980–09212
G 2	Generator	90980–11349
G 3	Glove Box Light	90980–11148

Note: Not all of the above part numbers of the connector are established for the supply.

Code	Part Name	Part Number
H 1	Headlight LH	90980–11314
H 2	Headlight RH	
H 5	Horn (High)	90980–10619
H 6	Hazard SW	90980–10801
H 7	Heater Blower SW	90980–10877
H 8	High Mounted Stop Light	90980–11436
H 9	Heated Oxygen Sensor (Bank 1 Sensor 2)	90980–11028
H10	Horn (Low)	90980–10619
I 1	Idle Air Control Valve	90980–11145
I 2	Igniter	90980–11653
I 3	Ignition Coil No.1	90980–11246
I 4	Ignition Coil No.2	
I 5	Ignition Coil No.3	
I 6	Injector No.1	90980–11153
I 7	Injector No.2	
I 8	Injector No.3	
I 9	Injector No.4	
I10	Injector No.5	
I11	Injector No.6	
I14	Ignition SW	90980–11615
I16	Interior Light (Double, Extra Cab)	90980–10935
	Interior Light (Regular Cab)	90980–10121
I20	Ignition Coil and Igniter No.1	90980–11885
I21	Ignition Coil and Igniter No.2	
I22	Ignition Coil and Igniter No.3	
I23	Ignition Coil and Igniter No.4	
J 1	Junction Connector	90980–10803
J 9	Junction Connector	90980–11661
J10	Junction Connector	
J11	Junction Connector	90980–11542
J13	Junction Connector	90980–10803
K 1	Knock Sensor	90980–11166
K 2	Knock Sensor 1	
K 3	Knock Sensor 2	
L 1	License Plate Light LH	90980–11162
L 2	License Plate Light RH	
M 1	Mass Air Flow Meter	90980–11317
N 1	Noise Filter (Ignition System)	90980–10843
O 1	O/D Solenoid	90980–11156
O 2	Oil Pressure SW	90980–11363
O 6	O/D ECU	90980–10799
P 1	Park/Neutral Position SW (Except 2RZ–FE)	90980–11784
	Park/Neutral Position SW (2RZ–FE)	90980–11332
P 2	Parking Light LH	90980–11149
P 3	Parking Light RH	

Code	Part Name	Part Number
P 4	Parking Brake SW	90980–10825
P 5	Personal Light	90980–10935
P 6	Power Window Control SW Front RH	90980–10789
P 7	Power Window Master SW and Door Lock Control SW LH (Double Cab)	90980–10807
	Power Window Master SW and Door Lock Control SW LH (Except Double Cab)	90980–10997
P 8	Power Window Motor Front LH	90980–11248
P 9	Power Window Motor Front RH	
P10	Power Steering Oil Pressure SW	90980–11428
P13	Power Outlet	90980–10760
P14	Power Outlet	
P19	Passenger Airbag Manual On/Off Indicator	90980–11950
P20	Passenger Airbag Manual On/Off SW	90980–12017
P21	Pretensioner LH	90980–12253
P22	Pretensioner RH	
P23	Power Seat Motor (Lumbar Support)	90980–10935
P24	Power Seat SW (Lumbar Support)	90980–10127
P25	Power Window Control SW Rear LH	90980–10631
P26	Power Window Control SW Rear RH	
P27	Power Window Motor Rear LH	90980–10860
P28	Power Window Motor Rear RH	
R 1	Radio and Player	90980–10997
R 2	Radio and Player	90980–10996
R 3	Rheostat	90980–10216
R 4	Rheostat	90980–10214
R 6	Rear Combination Light LH	90980–10173
R 7	Rear Combination Light RH	
R 8	Remote Control Mirror LH	90980–11169
R 9	Remote Control Mirror RH	
R10	Remote Control Mirror SW	90980–11657
R11	Rear ABS Speed Sensor LH	90980–11467
R12	Rear ABS Speed Sensor RH	
R13	Rear Diff. Lock Detection SW	90980–11250
R14	Rear Diff. Lock Motor	90980–11194
R15	Rear Diff. Lock SW	90980–10631
R16	Rear Diff. Lock ECU	90980–10801
S 1	Starter	90980–11400
S 2	Starter (3RZ–FE, 2RZ–FE)	90980–09506
	Starter (5VZ–FE)	90980–09584
S 4	Shift Lock Control Relay and O/D Main SW	90980–11614
S 5	Stop Light SW	90980–11118
S 6	Speaker (Front Door LH)	90980–10916
S 7	Speaker (Front Door RH)	

L PART NUMBER OF CONNECTORS

Code	Part Name	Part Number
S 8	Speaker (Rear LH) (Double Cab, Regular Cab)	90980–10825
	Speaker (Rear LH) (Extra Cab)	90980–11299
S 9	Speaker (Rear RH) (Double Cab, Regular Cab)	90980–10825
	Speaker (Rear RH) (Extra Cab)	90980–11299
T 1	Throttle Position Sensor (3RZ–FE, 2RZ–FE,5VZ–FE Ex.M/T 2WD)	90980–11261
	Throttle Position Sensor (5VZ–FE Ex.M/T 2WD)	90980–10711
T 2	2–4 Select Motor	90980–11858
T 3	2–4 Select SW	90980–10355
T 4	Transmission Control Relay	90980–10801
T 5	Tweeter LH	90980–10906
T 6	Tweeter RH	
T 7	Throttle Control Motor	90980–10942
T 8	TVIP Warning Buzzer	90980–11051
T 9	TVIP ECU	90980–11326
U 1	Unlock Warning SW (A/T)	90980–10795
	Unlock Warning SW (M/T)	90980–10860
V 1	Vehicle Speed Sensor (Electronically Controlled Transmission)	90980–11156
V 3	VSV (EGR)	90980–11162
V 4	VSV (EVAP)	90980–11156
V 8	Vapor Pressure Sensor	90980–11143
V10	Vehicle Speed Sensor	
V11	VSV (Canister Closed Valve)	90980–11162
V12	VSV (Pressure Switching Valve)	90980–11156
W 1	Washer Motor and Washer Level Sensor (Cold Area Spec.) or Washer Motor (Except Cold Area Spec.)	90980–10942
W 2	Water Temp. Sender (3RZ–FE, 2RZ–FE)	90980–11428
	Water Temp. Sender (5VZ–FE)	90980–10359
W 3	Wiper Motor	90980–11599

Code	Part Name	Part Number

Note: Not all of the above part numbers of the connector are established for the supply.

Code	Part Name	Part Number	Code	Part Name	Part Number

J POWER SOURCE (Current Flow Chart)

The chart below shows the route by which current flows from the battery to each electrical source (Fusible Link, Circuit Breaker, Fuse, etc.) and other parts.

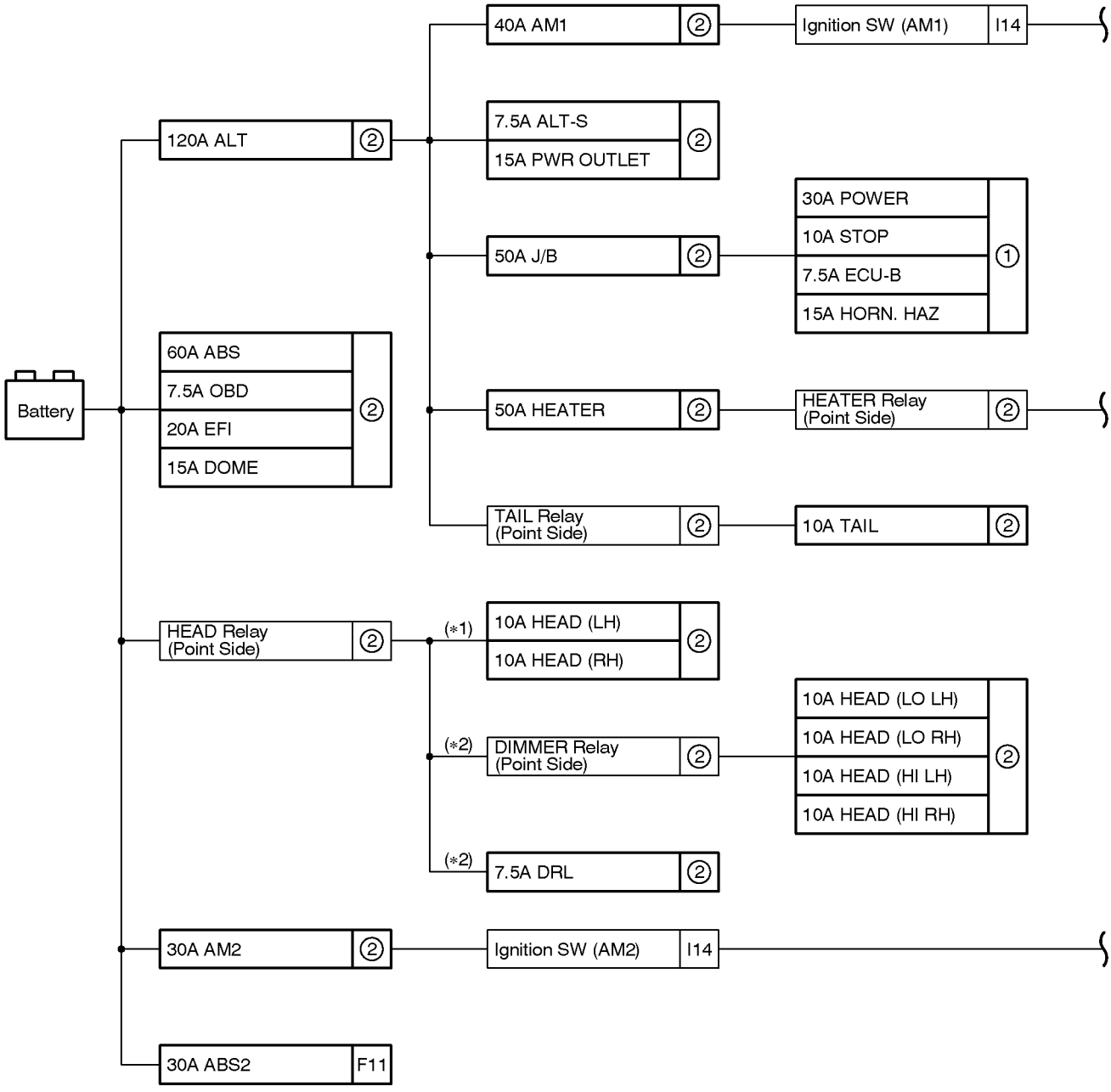

[LOCATION] ① : J/B No.1 (See page 22) ② : R/B No.2 (See page 21)

*1 : w/o Daytime Running Light
*2 : w/ Daytime Running Light

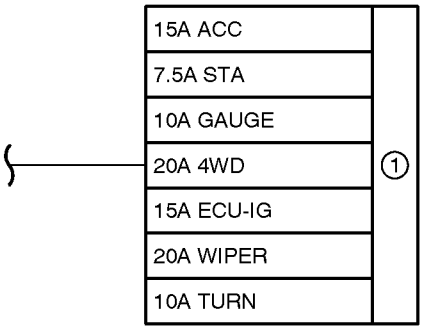

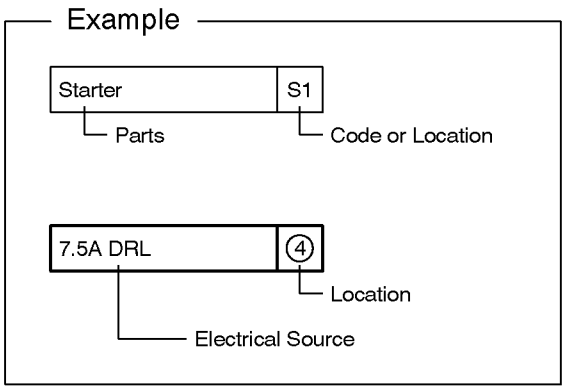





R/B No.2 (See Page 21)

Fuse		System	Page
7.5A	ALT–S	Charging	68
7.5A	DRL	Headlight (w/ Daytime Running Light)	104
7.5A	OBD	Engine Control (2RZ–FE)	94
		Engine Control (3RZ–FE)	86
		Engine Control (5VZ–FE except 2WD M/T)	70
		Engine Control (5VZ–FE 2WD M/T)	78
10A	A.C	Air Conditioning	220
10A	HEAD (HI LH)	Headlight (w/ Daytime Running Light)	104
10A	HEAD (HI RH)	Headlight (w/ Daytime Running Light)	104
10A	HEAD (LH)	Headlight (w/o Daytime Running Light)	102
10A	HEAD (LO LH)	Headlight (w/ Daytime Running Light)	104
10A	HEAD (LO RH)	Headlight (w/ Daytime Running Light)	104
10A	HEAD (RH)	Headlight (w/o Daytime Running Light)	102
10A	TAIL	Cigarette Lighter and Clock	200
		Combination Meter (w/ Tachometer)	208
		Combination Meter (w/o Tachometer)	214
		Engine Control (2RZ–FE)	94
		Engine Control (3RZ–FE)	86
		Taillight and Illumination	110
15A	DOME	Cigarette Lighter and Clock	200
		Combination Meter (w/ Tachometer)	208
		Door Lock Control	178
		Interior Light	108
		Key Reminder and Seat Belt Warning	196
		Light Auto Turn Off	120
		Power Window	182
		Radio and Player	204
15A	PWR OUTLET	Power Outlet	198
20A	EFI	Automatic Transmission (2RZ–FE)	134
		Electronically Controlled Transmission (3RZ–FE)	128
		Electronically Controlled Transmission (5VZ–FE)	122
		Engine Control (2RZ–FE)	94
		Engine Control (3RZ–FE)	86
		Engine Control (5VZ–FE except 2WD M/T)	70
		Engine Control (5VZ–FE 2WD M/T)	78
30A	AM2	Engine Control (2RZ–FE)	94
		Engine Control (3RZ–FE)	86
		Engine Control (5VZ–FE except 2WD M/T)	70
		Engine Control (5VZ–FE 2WD M/T)	78
		Ignition (3RZ–FE, 2RZ–FE)	66
		Starting and Ignition (5VZ–FE)	58

∗ These are the page numbers of the first page on which the related system is shown.

Fuse		System	Page
40A	AM1	Engine Control (2RZ–FE)	94
		Engine Control (3RZ–FE)	86
		Engine Control (5VZ–FE except 2WD M/T)	70
		Engine Control (5VZ–FE 2WD M/T)	78
		Starting and Ignition (5VZ–FE)	58
		Starting (3RZ–FE, 2RZ–FE)	62
50A	HEATER	Air Conditioning	220
60A	ABS	ABS	150
120A	ALT	Charging	68
		Engine Control (2RZ–FE)	94
		Engine Control (3RZ–FE)	86
		Engine Control (5VZ–FE except 2WD M/T)	70
		Engine Control (5VZ–FE 2WD M/T)	78
		Light Auto Turn Off	120
		Power Outlet	198
		Starting and Ignition (5VZ–FE)	58
		Taillight and Illumination	110

J/B No.1 (See Page 22)

Fuse		System	Page
7.5A	ECU–B	Air Conditioning	220
		Headlight (w/ Daytime Running Light)	104
7.5A	IGN	Automatic Transmission (2RZ–FE)	134
		Charging	68
		Combination Meter (w/ Tachometer)	208
		Combination Meter (w/o Tachometer)	214
		Electronically Controlled Transmission (3RZ–FE)	128
		Electronically Controlled Transmission (5VZ–FE)	122
		Engine Control (2RZ–FE)	94
		Engine Control (3RZ–FE)	86
		Engine Control (5VZ–FE except 2WD M/T)	70
		Engine Control (5VZ–FE 2WD M/T)	78
		SRS	157
7.5A	STA	Automatic Transmission (2RZ–FE)	134
		Electronically Controlled Transmission (3RZ–FE)	128
		Electronically Controlled Transmission (5VZ–FE)	122
		Engine Control (2RZ–FE)	94
		Engine Control (3RZ–FE)	86
		Engine Control (5VZ–FE except 2WD M/T)	70
		Engine Control (5VZ–FE 2WD M/T)	78
		Starting and Ignition (5VZ–FE)	58
		Starting (3RZ–FE, 2RZ–FE)	62
10A	GAUGE	ABS	150
		Air Conditioning	220

∗ These are the page numbers of the first page on which the related system is shown.

J POWER SOURCE (Current Flow Chart)

Fuse		System	Page
10A	GAUGE	Automatic Transmission (2RZ–FE)	134
		Back–Up Light	118
		Charging	68
		Combination Meter (w/ Tachometer)	208
		Combination Meter (w/o Tachometer)	214
		Cruise Control (except 5VZ–FE 2WD M/T,3RZ–FE and 2RZ–FE)	138
		Cruise Control (5VZ–FE 2WD M/T,3RZ–FE and 2RZ–FE)	144
		Electronically Controlled Transmission (3RZ–FE)	128
		Electronically Controlled Transmission (5VZ–FE)	122
		Engine Control (2RZ–FE)	94
		Engine Control (3RZ–FE)	86
		Engine Control (5VZ–FE except 2WD M/T)	70
		Engine Control (5VZ–FE 2WD M/T)	78
		Headlight (w/ Daytime Running Light)	104
		Key Reminder and Seat Belt Warning	196
		Rear Differential Lock	172
		SRS	157
		Starting and Ignition (5VZ–FE)	58
		Starting (3RZ–FE, 2RZ–FE)	62
		4WD (w/ 2–4 Select SW)	162
		4WD (w/o 2–4 Select SW)	168
10A	STOP	ABS	150
		Automatic Transmission (2RZ–FE)	134
		Cruise Control (except 5VZ–FE 2WD M/T,3RZ–FE and 2RZ–FE)	138
		Cruise Control (5VZ–FE 2WD M/T,3RZ–FE and 2RZ–FE)	144
		Electronically Controlled Transmission (3RZ–FE)	128
		Electronically Controlled Transmission (5VZ–FE)	122
		Engine Control (2RZ–FE)	94
		Engine Control (3RZ–FE)	86
		Engine Control (5VZ–FE except 2WD M/T)	70
		Engine Control (5VZ–FE 2WD M/T)	78
		Shift Lock	176
		Stop Light	116
10A	TURN	Turn Signal and Hazard Warning Light	114
15A	ACC	Cigarette Lighter and Clock	200
		Key Reminder and Seat Belt Warning	196
		Power Outlet	198
		Radio and Player	204
		Remote Control Mirror (w/ Power Window)	188
		Remote Control Mirror (w/o Power Window)	190
		Shift Lock	176
15A	ECU–IG	ABS	150
		Automatic Transmission (2RZ–FE)	134
		Cruise Control (except 5VZ–FE 2WD M/T,3RZ–FE and 2RZ–FE)	138

∗ These are the page numbers of the first page on which the related system is shown.

Fuse		System	Page
15A	ECU–IG	Cruise Control (5VZ–FE 2WD M/T,3RZ–FE and 2RZ–FE)	144
		Door Lock Control	178
		Interior Light	108
		Key Reminder and Seat Belt Warning	196
		Light Auto Turn Off	120
		Power Window	182
		Shift Lock	176
		SRS	157
15A	HORN.HAZ	Horn	154
		Turn Signal and Hazard Warning Light	114
20A	WIPER	Wiper and Washer (w/ Int time SW Mechanism)	192
		Wiper and Washer (w/o Int time SW Mechanism)	194
20A	4WD	Rear Differential Lock	172
		4WD (w/ 2–4 Select SW)	162
		4WD (w/o 2–4 Select SW)	168
30A	POWER	Door Lock Control	178
		Power Seat	202
		Power Window	182

* These are the page numbers of the first page on which the related system is shown.

F RELAY LOCATIONS

[Engine Compartment]

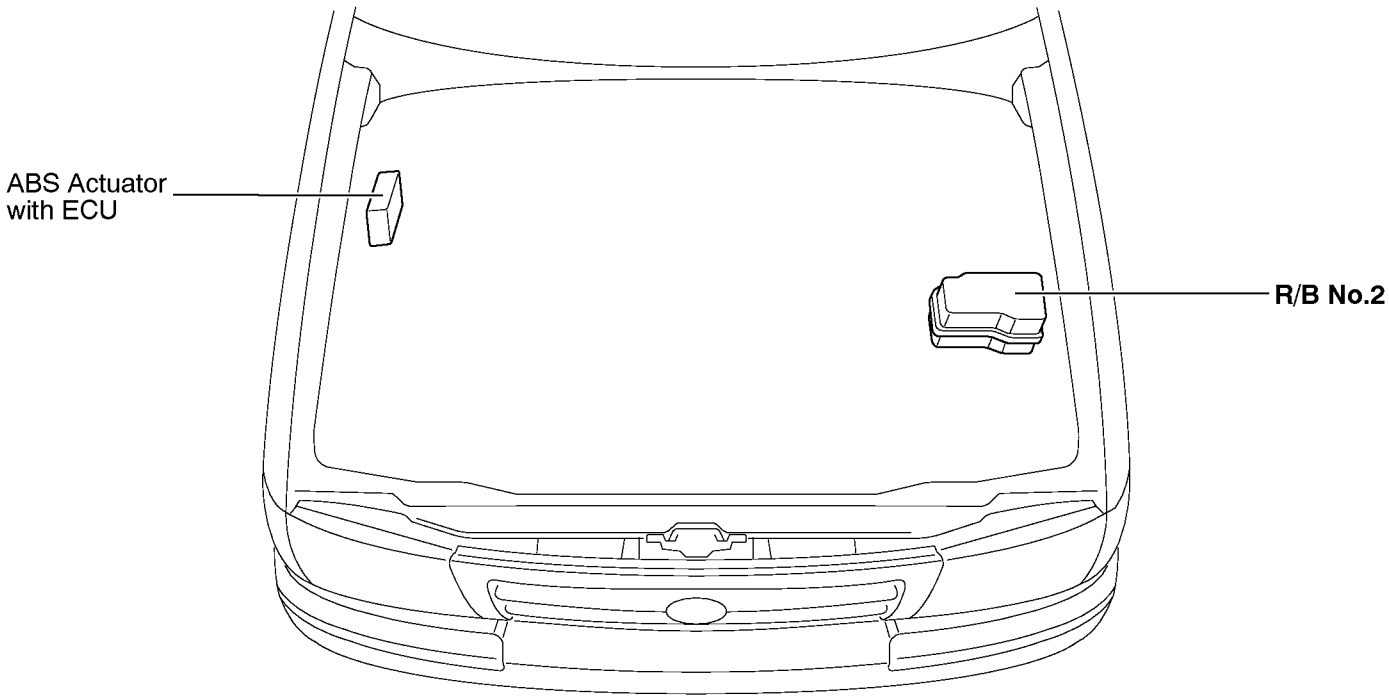

[Instrument Panel]

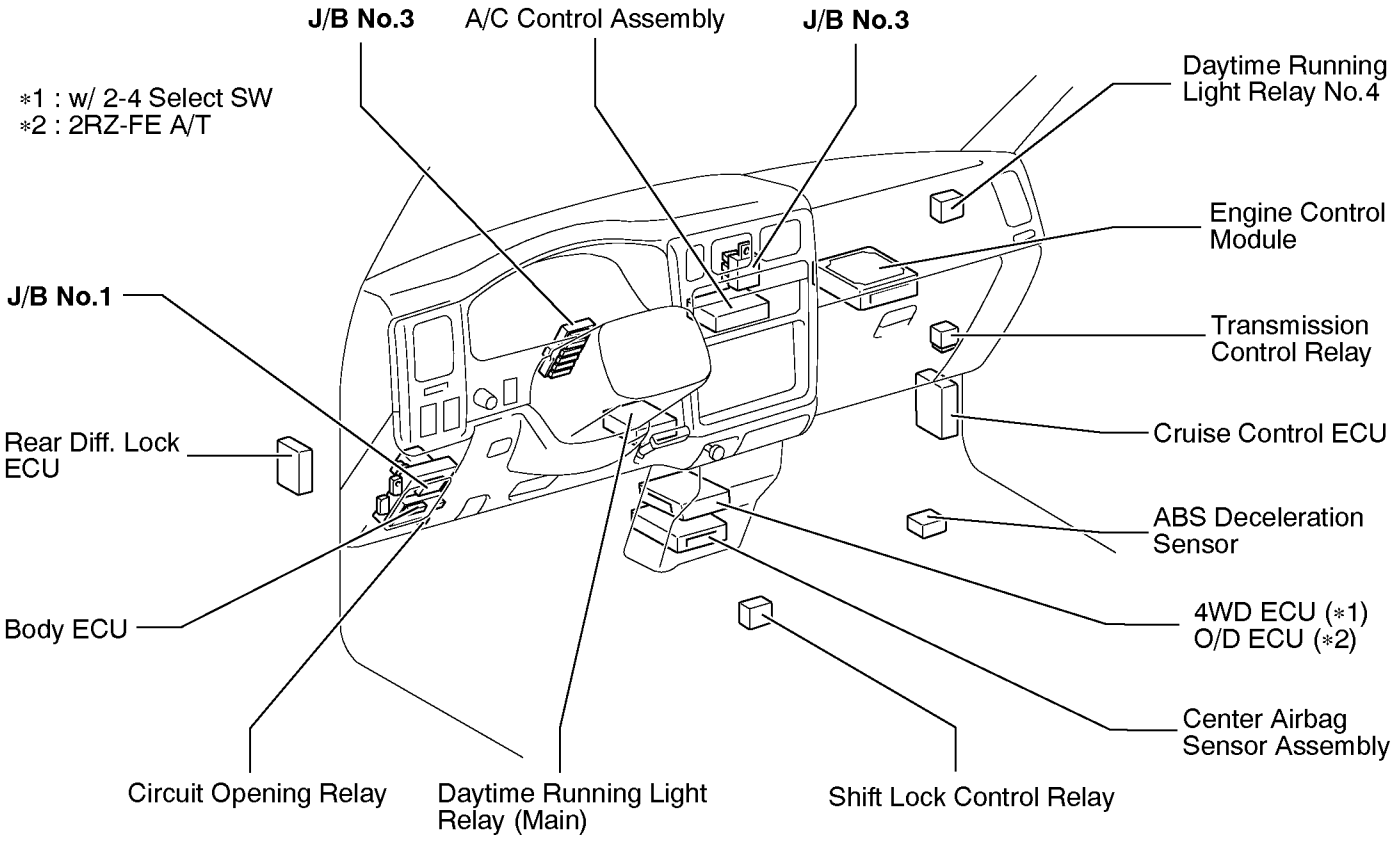

② : R/B No.2	Engine Compartment Left (See Page 20)

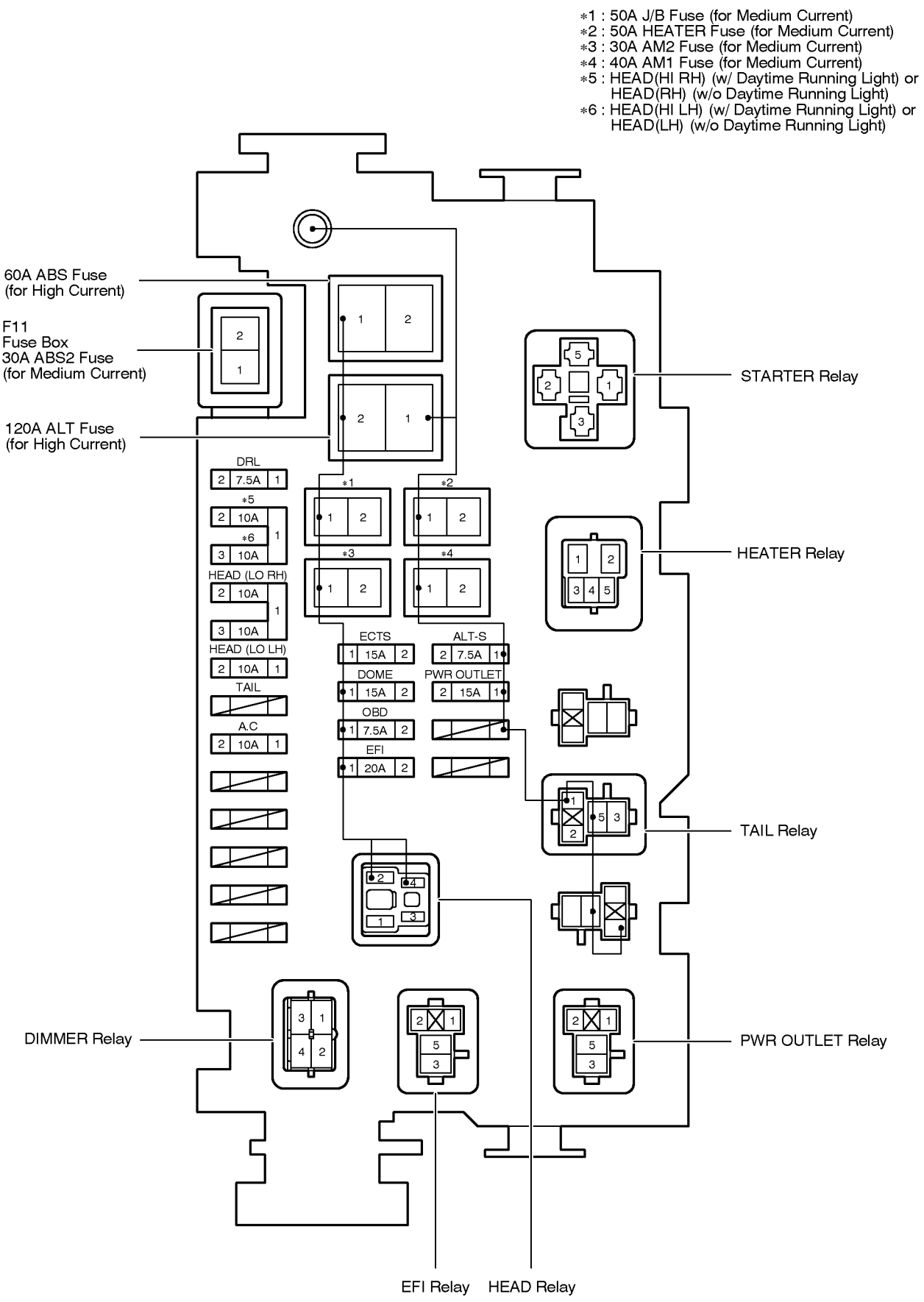

F RELAY LOCATIONS

: J/B No.1	Lower Finish Panel (See Page 20)

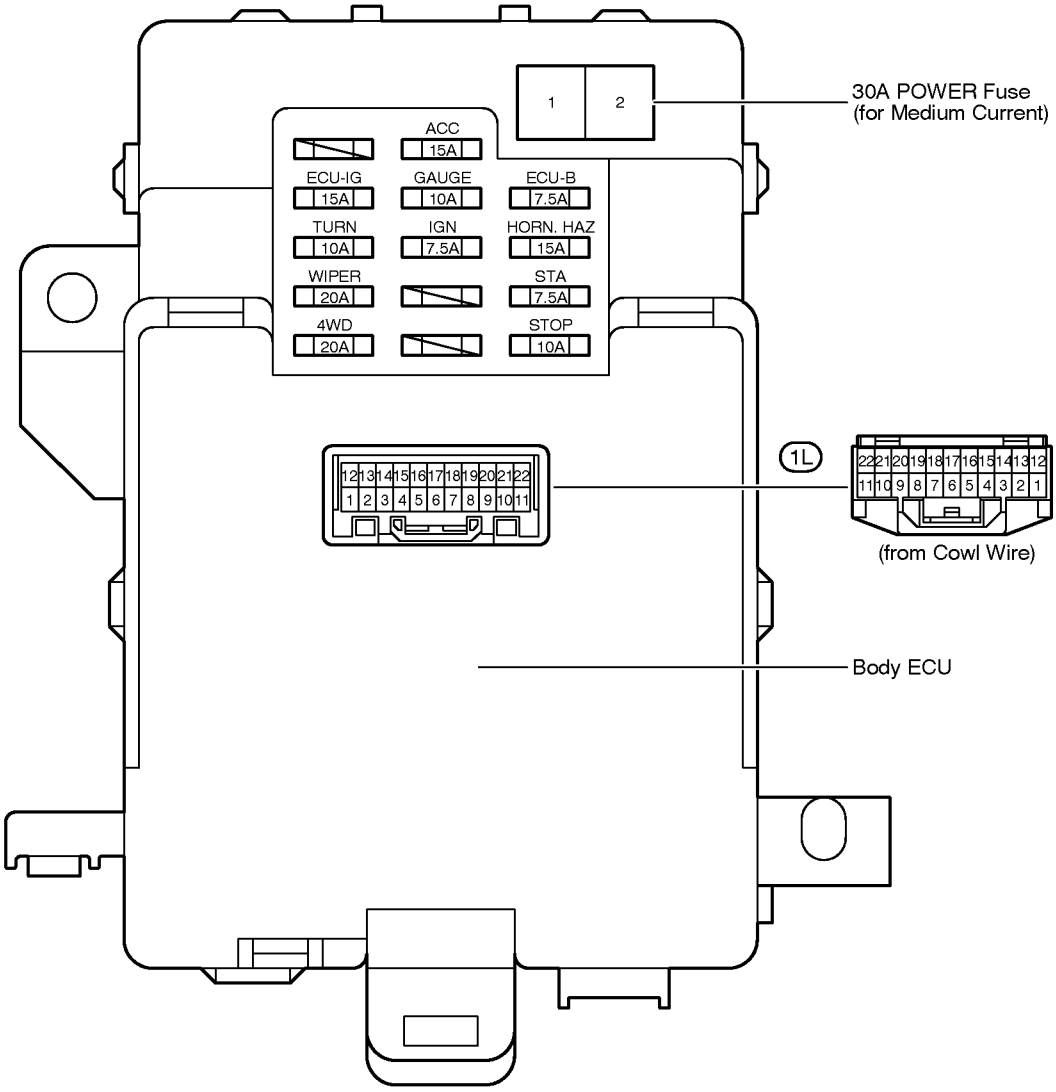

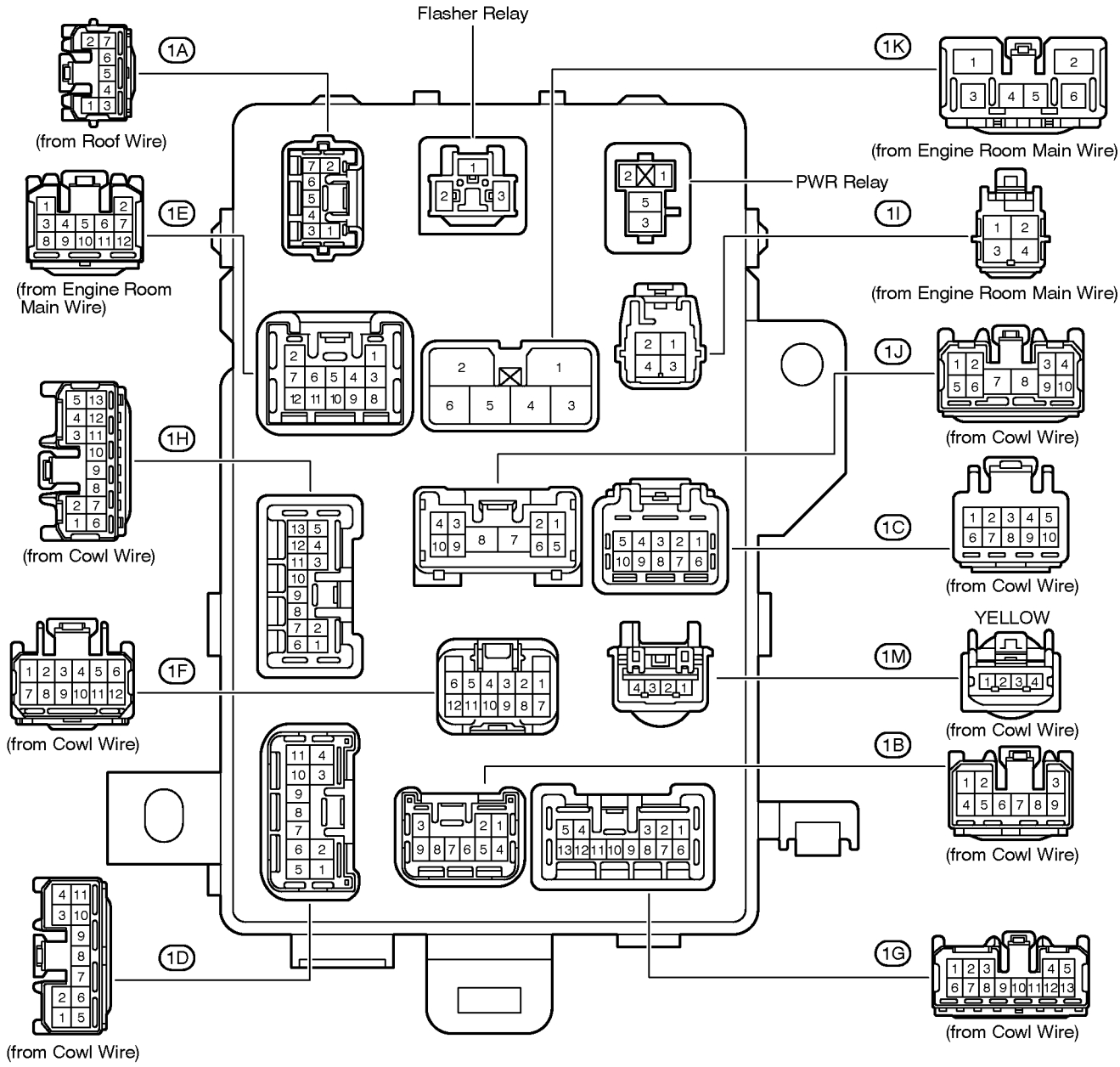
Flasher Relay
1A
(from Roof Wire)
1K
(from Engine Room Main Wire)
PWR Relay
1E
(from Engine Room Main Wire)
1I
(from Engine Room Main Wire)
1J
(from Cowl Wire)
1H
(from Cowl Wire)
1C
(from Cowl Wire)
YELLOW
1M
(from Cowl Wire)
1F
(from Cowl Wire)
1B
(from Cowl Wire)
1D
(from Cowl Wire)
1G
(from Cowl Wire)

[J/B No.1 Inner Circuit]

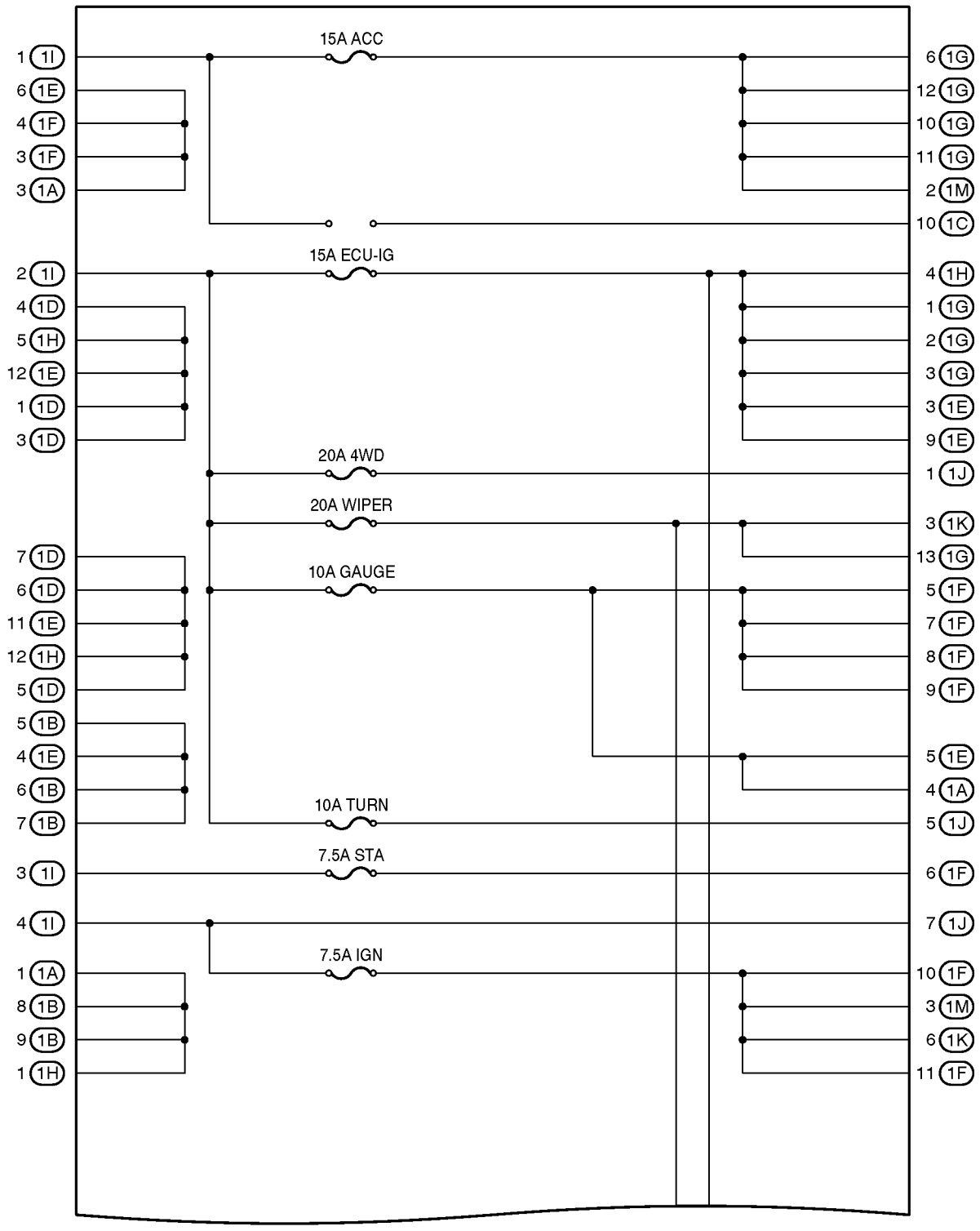

(Cont. next page)

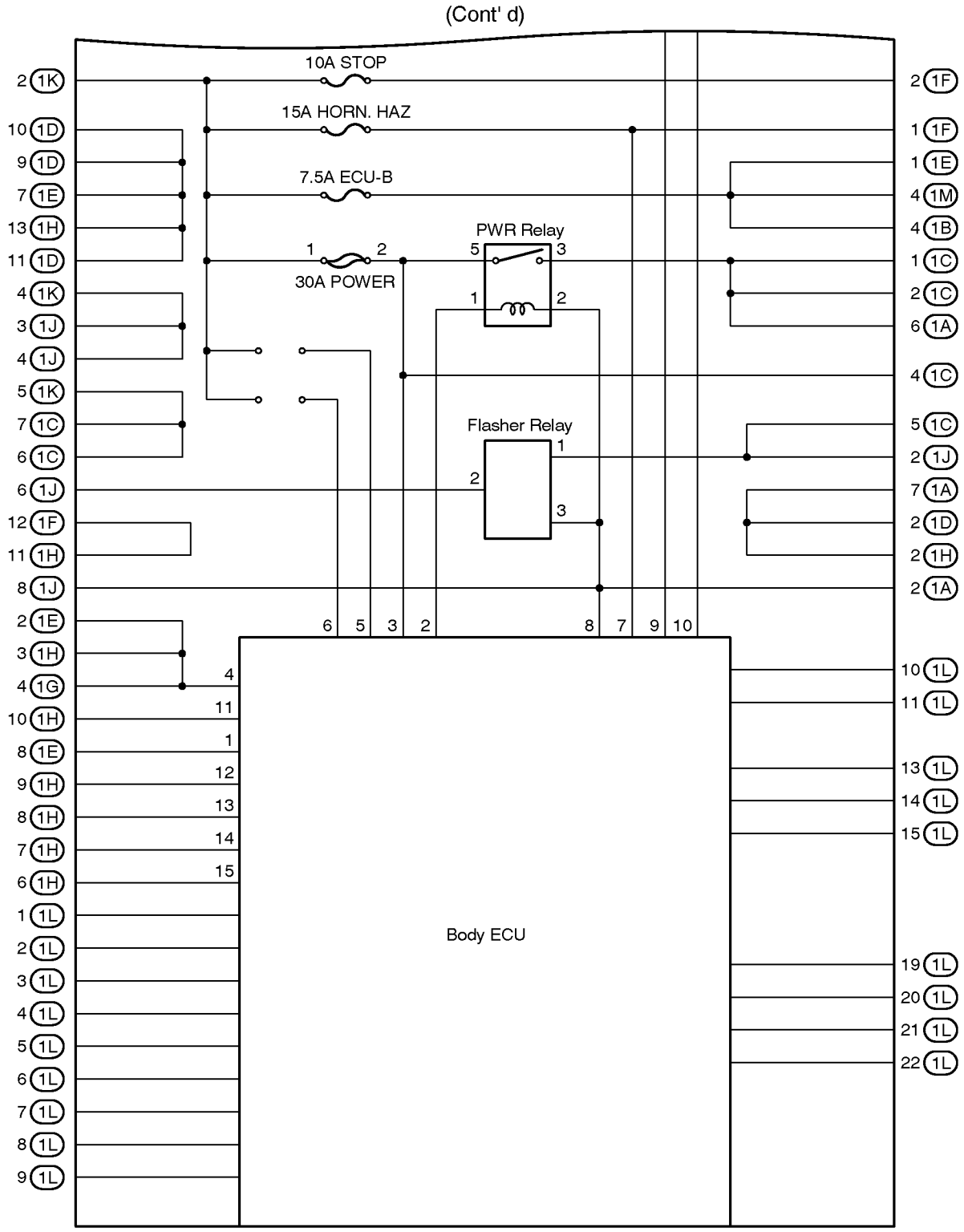
(Cont' d)
10A STOP
15A HORN. HAZ
7.5A ECU-B
30A POWER
PWR Relay
Flasher Relay
Body ECU
2 1K
10 1D
9 1D
7 1E
13 1H
11 1D
4 1K
3 1J
4 1J
5 1K
7 1C
6 1C
6 1J
12 1F
11 1H
8 1J
2 1E
3 1H
4 1G
10 1H
8 1E
9 1H
8 1H
7 1H
6 1H
1 1L
2 1L
3 1L
4 1L
5 1L
6 1L
7 1L
8 1L
9 1L
2 1F
1 1F
1 1E
4 1M
4 1B
1 1C
2 1C
6 1A
4 1C
5 1C
2 1J
7 1A
2 1D
2 1H
2 1A
10 1L
11 1L
13 1L
14 1L
15 1L
19 1L
20 1L
21 1L
22 1L

F RELAY LOCATIONS

: J/B No.3	Behind the Instrument Panel Left (See Page 20)

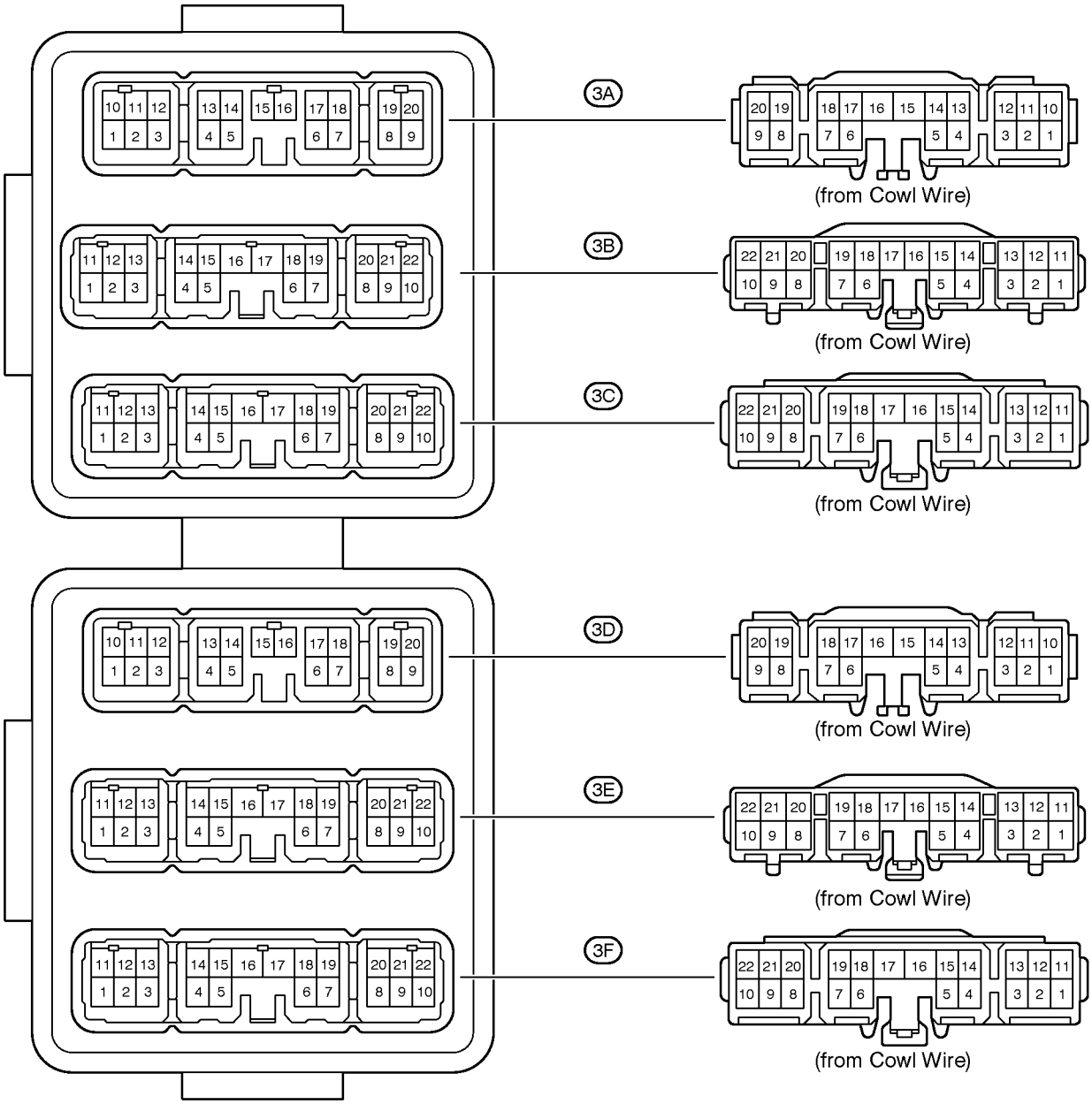

[J/B No.3 Inner Circuit]

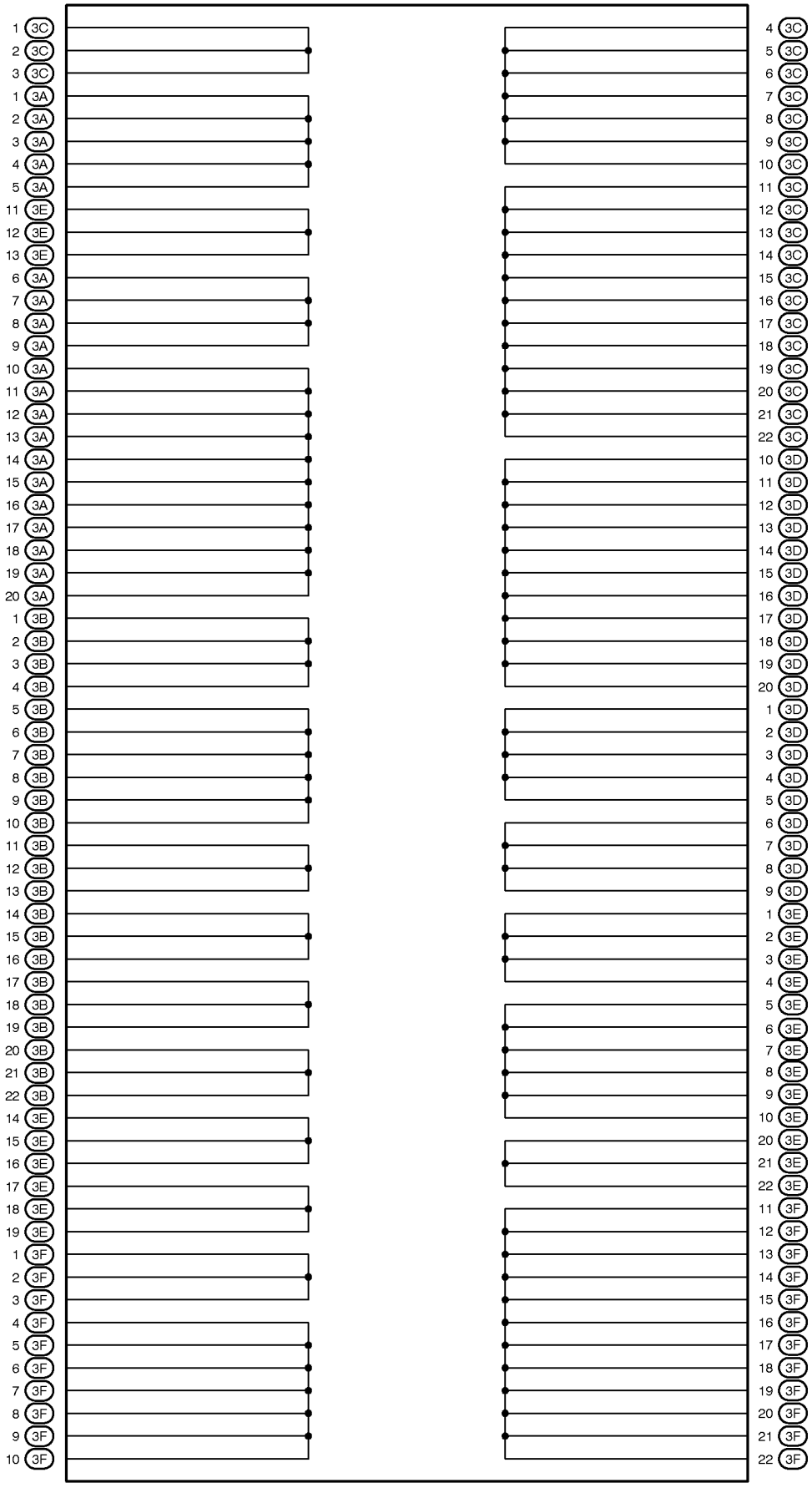

F RELAY LOCATIONS

: J/B No.3	Behind the Instrument Panel Center (See Page 20)

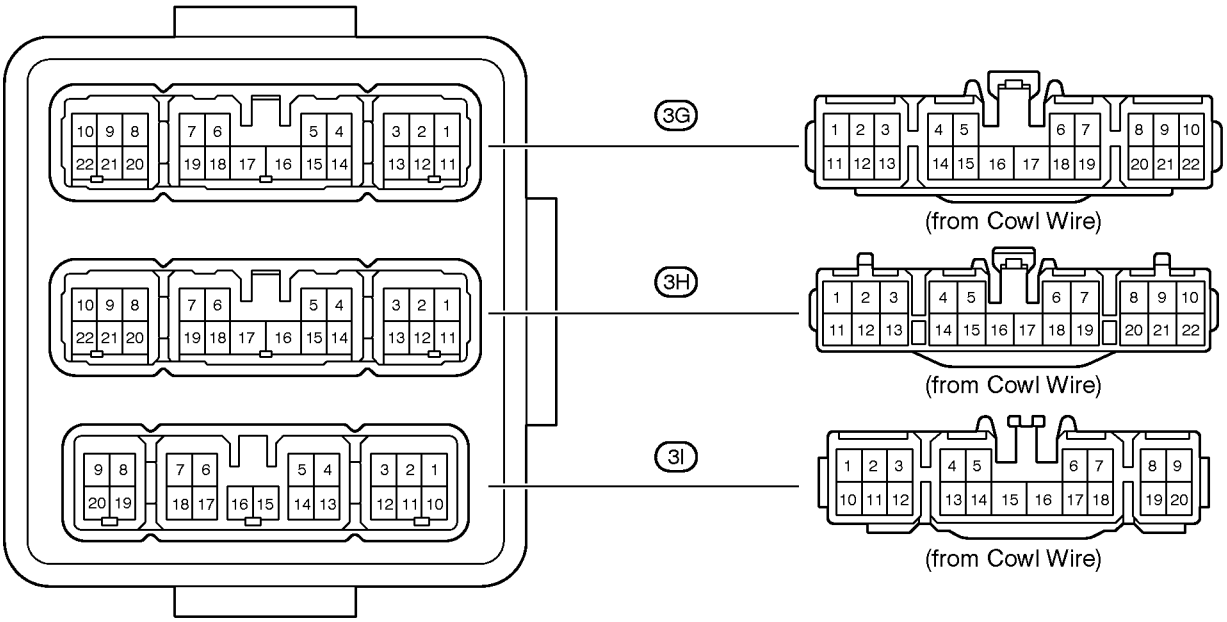

[J/B No.3 Inner Circuit]

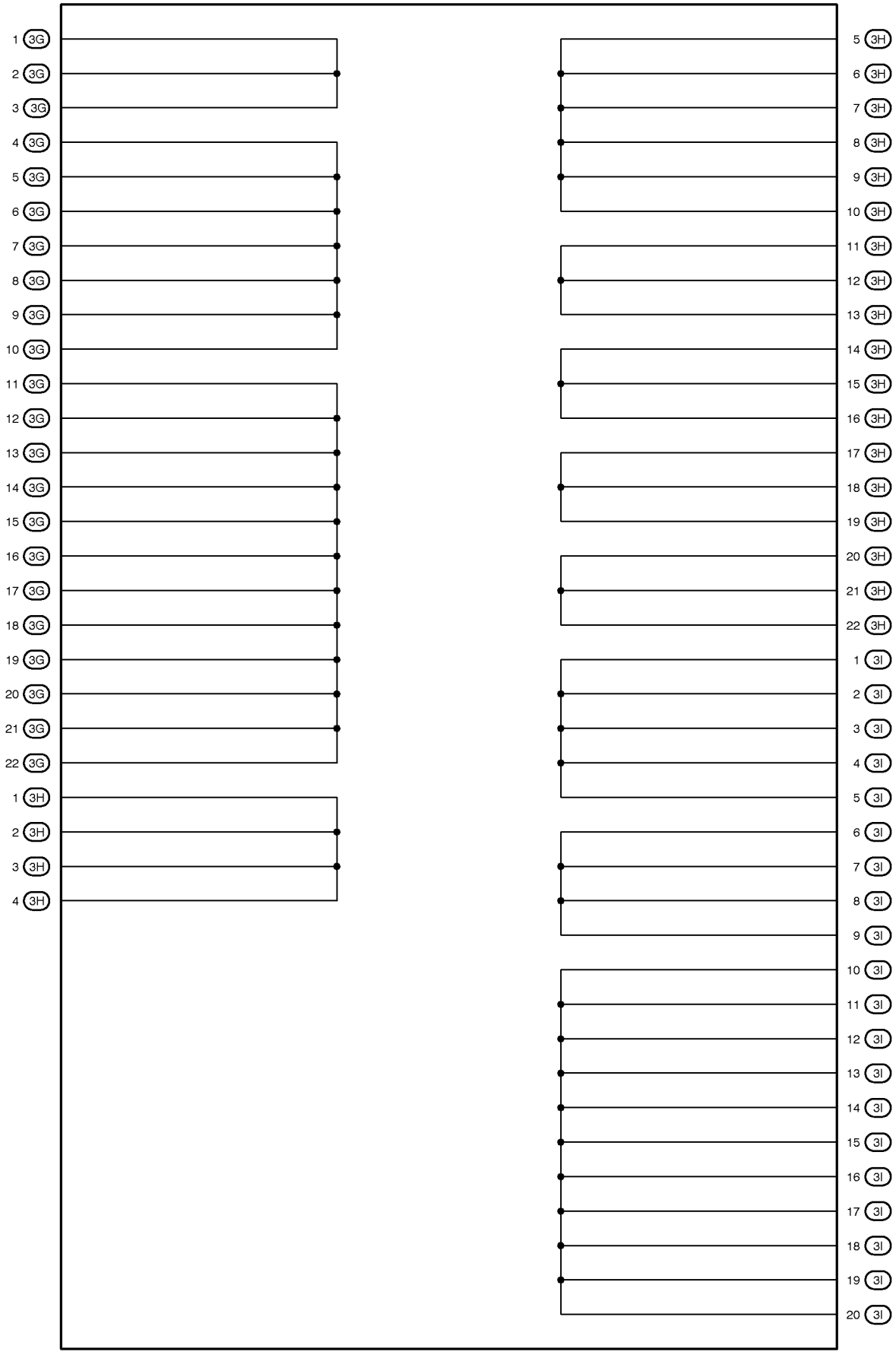

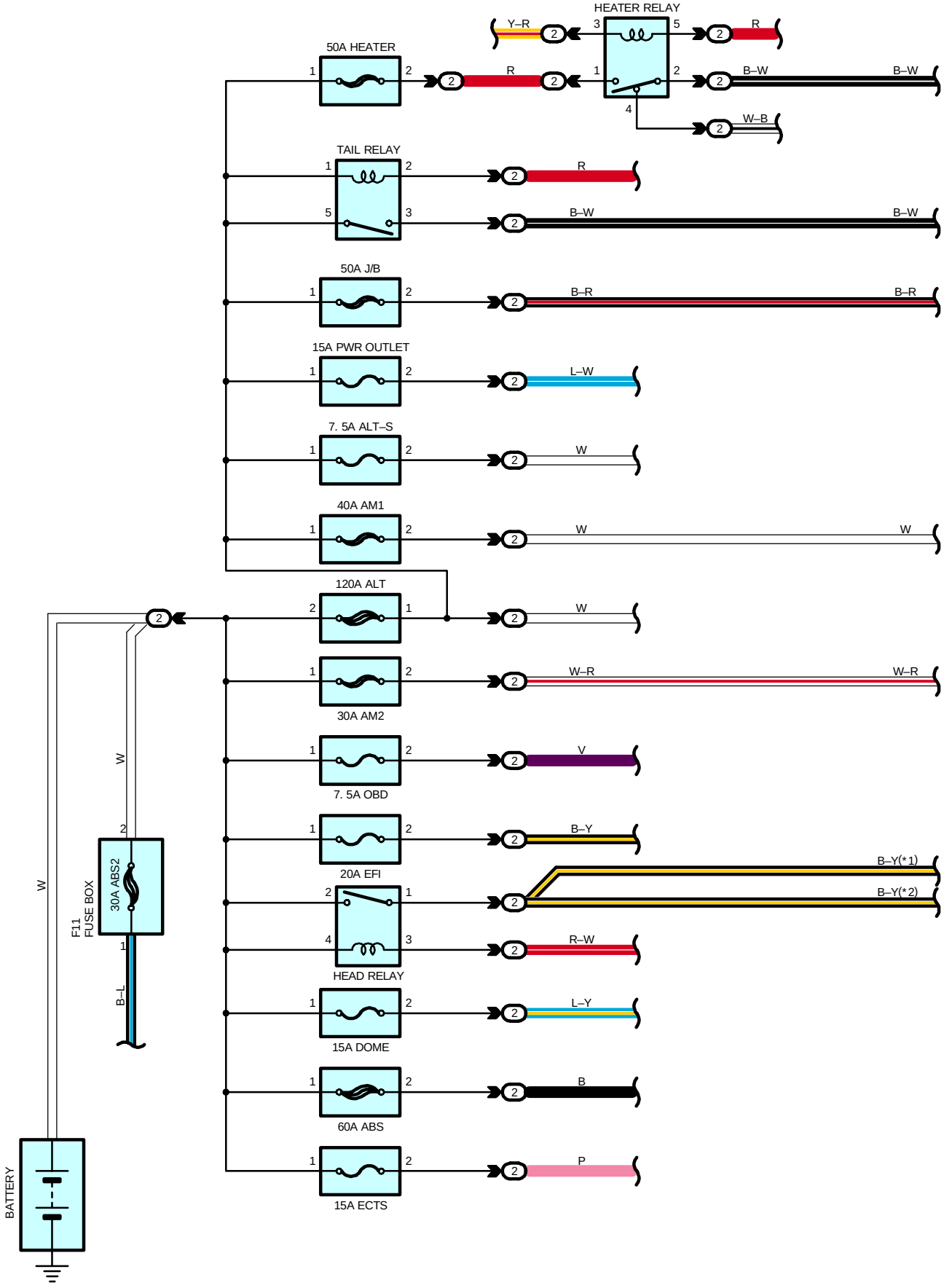
HEATER RELAY
Y–R
R
50A HEATER
R
B–W
B–W
W–B
TAIL RELAY
R
B–W
B–W
50A J/B
B–R
B–R
15A PWR OUTLET
L–W
7. 5A ALT–S
W
40A AM1
W
W
120A ALT
W
W–R
W–R
30A AM2
V
7. 5A OBD
B–Y
20A EFI
B–Y(*1)
B–Y(*2)
HEAD RELAY
R–W
15A DOME
L–Y
60A ABS
B
15A ECTS
P
W
F11
FUSE BOX
30A ABS2
B–L
BATTERY

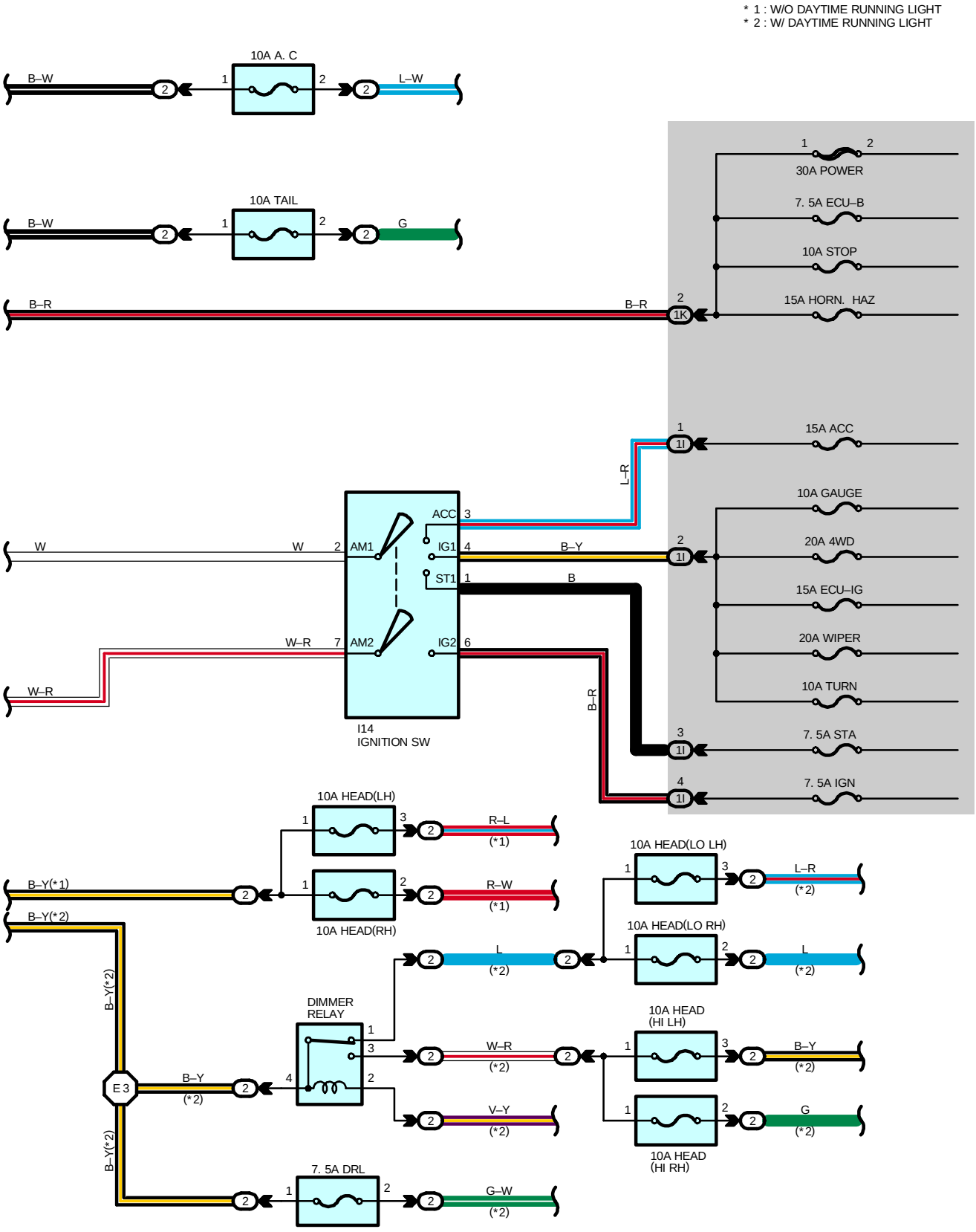
* 1 : W/O DAYTIME RUNNING LIGHT
* 2 : W/ DAYTIME RUNNING LIGHT
10A A. C
B–W
L–W
10A TAIL
G
B–R
30A POWER
7. 5A ECU–B
10A STOP
15A HORN. HAZ
15A ACC
10A GAUGE
20A 4WD
15A ECU–IG
20A WIPER
10A TURN
7. 5A STA
7. 5A IGN
L–R
W
W–R
ACC
IG1
ST1
IG2
AM1
AM2
B–Y
B
B–R
I14
IGNITION SW
10A HEAD(LH)
10A HEAD(RH)
R–L
R–W
(*1)
B–Y(*1)
B–Y(*2)
10A HEAD(LO LH)
10A HEAD(LO RH)
L–R
L
(*2)
DIMMER
RELAY
E 3
W–R
V–Y
10A HEAD
(HI LH)
10A HEAD
(HI RH)
B–Y
G
7. 5A DRL
G–W

POWER SOURCE

SERVICE HINTS

HEATER RELAY

1–2 : Closed with ignition SW on and heater blower SW on

HEAD RELAY

2–1 : Closed with light control SW at **HEAD** position or dimmer SW at **FLASH** position
Closed with engine running and parking brake lever released (w/ daytime running light)

I14 IGNITION SW

2–3 : Closed with ignition key at **ACC** or **ON** position
2–4 : Closed with ignition key at **ON** or **ST** position
7–6 : Closed with ignition key at **ON** or **ST** position

TAIL RELAY

5–3 : Closed with light control SW at **TAIL** or **HEAD** position

DIMMER RELAY

4–3 : Closed with HEAD relay on and dimmer SW at **HIGH** or **FLASH** position

: PARTS LOCATION

Code	See Page	Code	See Page	Code	See Page
I14	35				

: RELAY BLOCKS

Code	See Page	Relay Blocks (Relay Block Location)
2	21	R/B No.2 (Engine Compartment Left)

: JUNCTION BLOCK AND WIRE HARNESS CONNECTOR

Code	See Page	Junction Block and Wire Harness (Connector Location)
1I	23	Engine Room Main Wire and J/B No.1 (Lower Finish Panel)
1K		

: SPLICE POINTS

Code	See Page	Wire Harness with Splice Points	Code	See Page	Wire Harness with Splice Points
E3	40 (5VZ–FE)	Engine Room Main Wire	E3	42 (3RZ–FE, 2RZ–FE)	Engine Room Main Wire

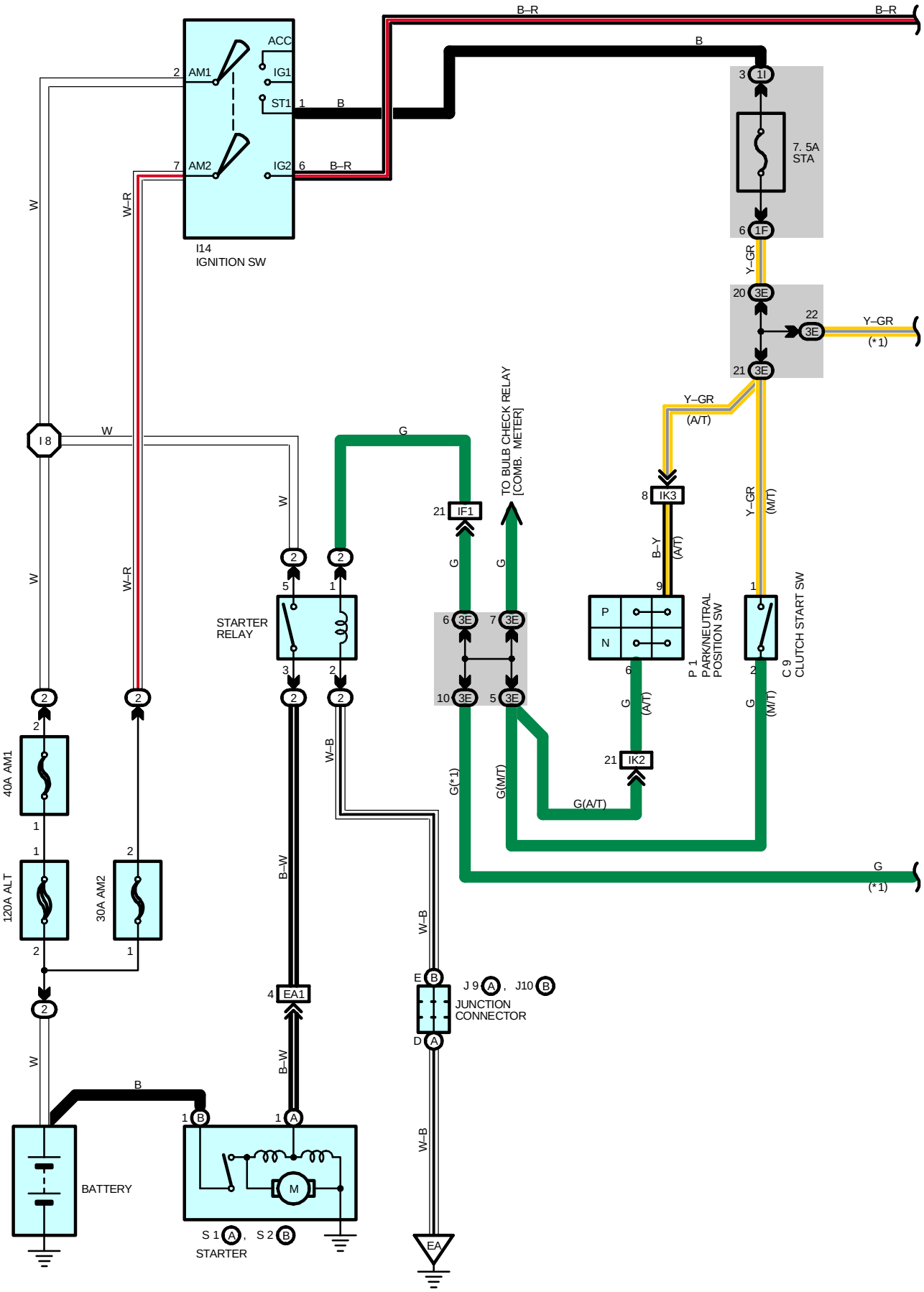
B–R
B–R
B
ACC
IG1
ST1
IG2
AM1
AM2
I14
IGNITION SW
7. 5A
STA
1I
1F
3E
Y–GR
(*1)
Y–GR
(A/T)
Y–GR
(M/T)
I 8
W
W–R
G
TO BULB CHECK RELAY
[COMB. METER]
IF1
IK3
IK2
B–Y
(A/T)
P
N
P 1
PARK/NEUTRAL
POSITION SW
C 9
CLUTCH START SW
STARTER
RELAY
G(*1)
G(M/T)
G(A/T)
W–B
B–W
40A AM1
120A ALT
30A AM2
EA1
E
B
J 9
A
J10
B
JUNCTION
CONNECTOR
D
A
B
BATTERY
M
S 1
A
S 2
B
STARTER
EA

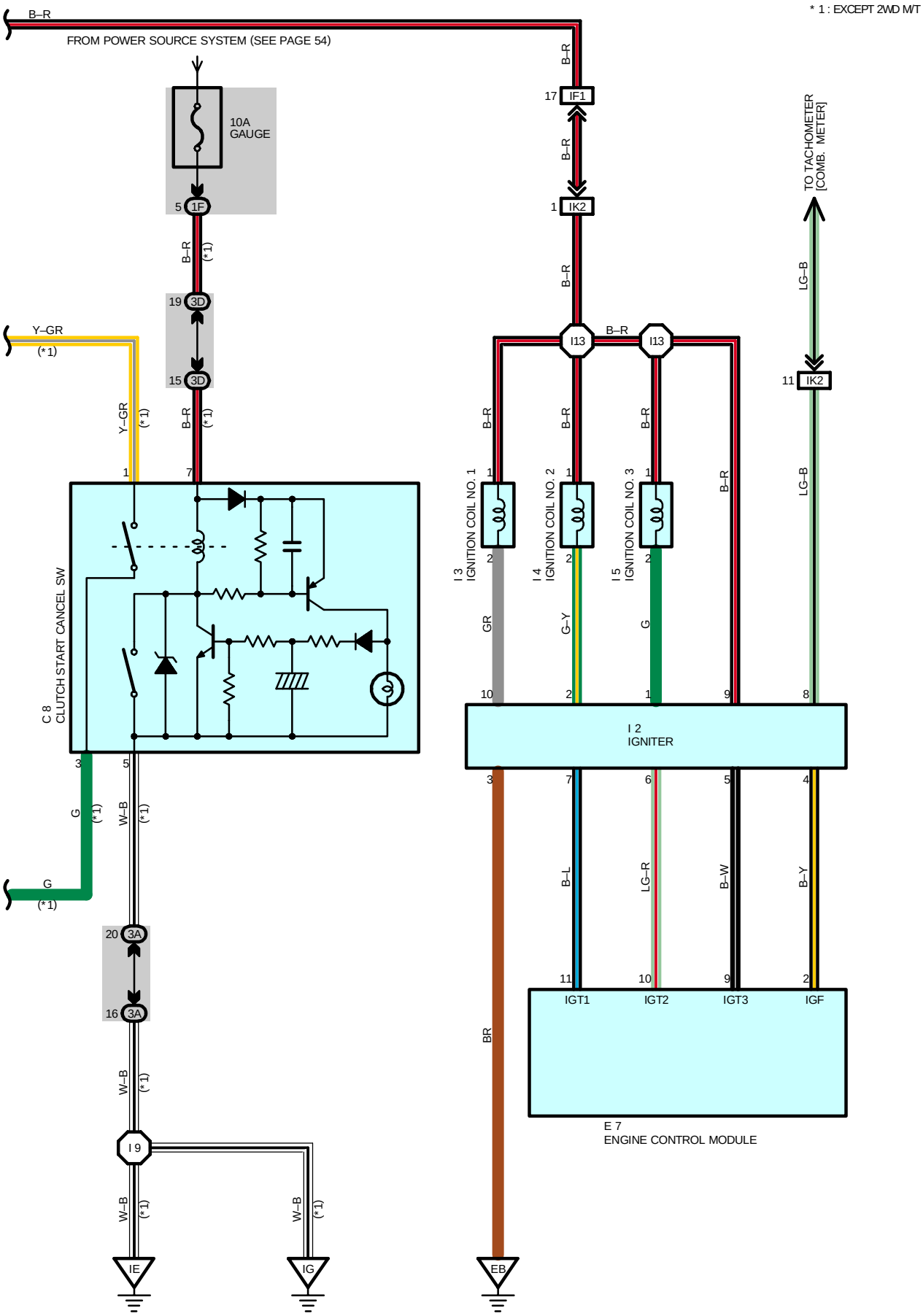
* 1 : EXCEPT 2WD M/T
B–R
FROM POWER SOURCE SYSTEM (SEE PAGE 54)
10A
GAUGE
5 1F
B–R (*1)
19 3D
15 3D
Y–GR (*1)
Y–GR (*1)
B–R (*1)
1
7
C 8
CLUTCH START CANCEL SW
3
5
G (*1)
W–B (*1)
G (*1)
20 3A
16 3A
W–B (*1)
I 9
W–B (*1)
W–B (*1)
IE
IG
17 IF1
B–R
1 IK2
B–R
I13
B–R
I13
B–R
B–R
B–R
I 3
IGNITION COIL NO. 1
I 4
IGNITION COIL NO. 2
I 5
IGNITION COIL NO. 3
B–R
GR
G–Y
G
10
2
1
9
I 2
IGNITER
3
7
6
5
4
BR
B–L
LG–R
B–W
B–Y
11
10
9
2
IGT1
IGT2
IGT3
IGF
E 7
ENGINE CONTROL MODULE
EB
TO TACHOMETER
[COMB. METER]
LG–B
11 IK2
LG–B
8

STARTING AND IGNITION (5VZ–FE)

SERVICE HINTS

S1 (A), S2 (B) STARTER

Points closed with Park/Neutral position SW at **P** or **N** position and ignition SW at **ST** position (A/T)
Points closed with clutch start SW or clutch start cancel SW on and ignition SW at **ST** position (M/T)

I14 IGNITION SW

7–6 : Closed with ignition SW at **ON** or **ST** position
2–1 : Closed with ignition SW at **ST** position

P1 PARK/NEUTRAL POSITION SW (A/T)

9–6 : Closed with A/T shift lever in **P** or **N** position

STARTER RELAY

5–3 : Closed with Park/Neutral position SW at **P** or **N** position and ignition SW at **ST** position (A/T)
5–3 : Closed with clutch start SW or clutch start cancel SW on and ignition SW at **ST** position (M/T)

C8 CLUTCH START CANCEL SW (M/T)

1–3 : Closed with ignition SW on and cancel SW on

C9 CLUTCH START SW (M/T)

1–2 : Closed with clutch pedal fully depressed

: PARTS LOCATION

Code	See Page	Code	See Page	Code	See Page
C8	34	I4	31 (5VZ–FE)	P1	31 (5VZ–FE)
C9	34	I5	31 (5VZ–FE)	S1 A	31 (5VZ–FE)
E7	35	I14	35	S2 B	31 (5VZ–FE)
I2	31 (5VZ–FE)	J9 A	31 (5VZ–FE)		
I3	31 (5VZ–FE)	J10 B	31 (5VZ–FE)		

: RELAY BLOCKS

Code	See Page	Relay Blocks (Relay Block Location)
2	21	R/B No.2 (Engine Compartment Left)

: JUNCTION BLOCK AND WIRE HARNESS CONNECTOR

Code	See Page	Junction Block and Wire Harness (Connector Location)
1F	23	Cowl Wire and J/B No.1 (Lower Finish Panel)
1I	23	Engine Room Main Wire and J/B No.1 (Lower Finish Panel)
3A	24	Cowl Wire and J/B No.3 (Behind the Instrument Panel Left)
3D		
3E		

: CONNECTOR JOINING WIRE HARNESS AND WIRE HARNESS

Code	See Page	Joining Wire Harness and Wire Harness (Connector Location)
EA1	40 (5VZ–FE)	Engine Room Main Wire and Engine No.2 Wire (Near the Battery)
IF1	44	Engine Room Main Wire and Cowl Wire (Left Kick Panel)
IK2	44	Engine Wire and Cowl Wire (Above the Glove Box)
IK3		

: GROUND POINTS

Code	See Page	Ground Points Location
EA	40 (5VZ–FE)	Front Left Fender
EB	40 (5VZ–FE)	Near the Throttle Body
IE	44	Around the Right Edge of the Reinforcement
IG	44	Around the Left Edge of the Reinforcement



: SPLICE POINTS

Code	See Page	Wire Harness with Splice Points	Code	See Page	Wire Harness with Splice Points
I8	44	Engine Room Main Wire	I13	44	Engine Wire
I9	44	Cowl Wire			

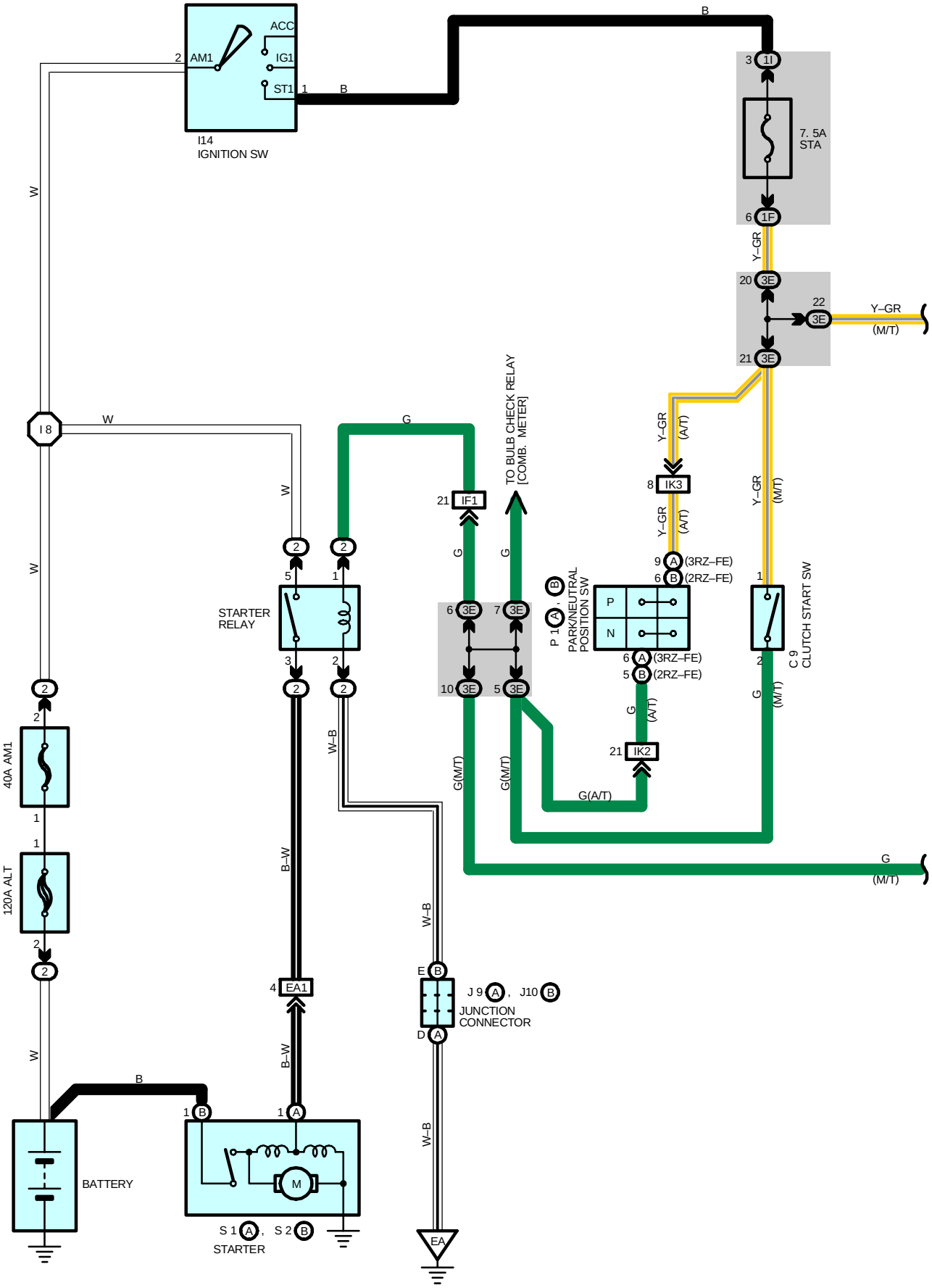
ACC
AM1
IG1
ST1
I14
IGNITION SW
B
W
I 8
7. 5A
STA
1I
1F
Y–GR
3E
22
(M/T)
21
TO BULB CHECK RELAY
[COMB. METER]
IF1
G
Y–GR
(A/T)
IK3
(M/T)
9 (3RZ–FE)
6 (2RZ–FE)
PARK/NEUTRAL
POSITION SW
P
N
P 1
CLUTCH START SW
C 9
STARTER
RELAY
W–B
B–W
40A AM1
120A ALT
IK2
G(A/T)
G(M/T)
EA1
JUNCTION
CONNECTOR
J 9 , J10
BATTERY
M
S 1 , S 2
STARTER
EA

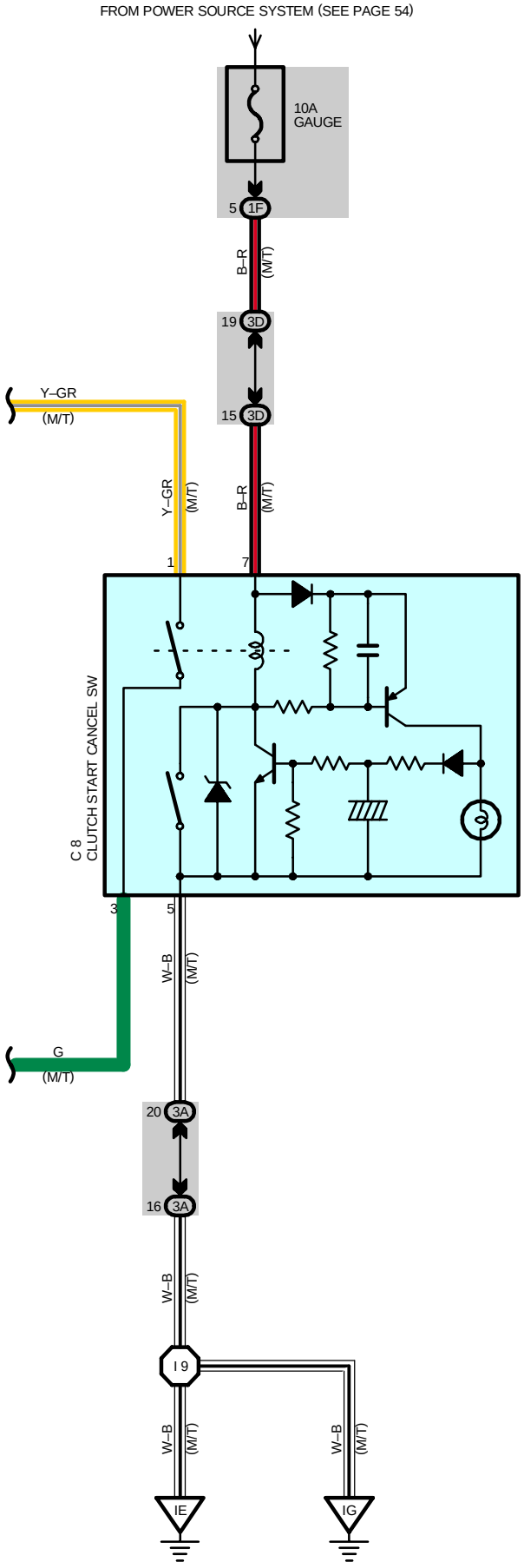
FROM POWER SOURCE SYSTEM (SEE PAGE 54)
10A
GAUGE
5
1F
B–R
(M/T)
19
3D
15
3D
Y–GR
(M/T)
B–R
(M/T)
Y–GR
(M/T)
1
7
C 8
CLUTCH START CANCEL SW
3
5
W–B
(M/T)
G
(M/T)
20
3A
16
3A
W–B
(M/T)
I 9
W–B
(M/T)
W–B
(M/T)
IE
IG

STARTING (3RZ–FE, 2RZ–FE)

SERVICE HINTS

S1 (A), S2 (B) STARTER

Points closed with Park/Neutral position SW at **P** or **N** position and ignition SW at **ST** position (A/T)
Points closed with clutch start SW or clutch start cancel SW on and ignition SW at **ST** position (M/T)

I14 IGNITION SW

2–1 : Closed with ignition SW at **ST** position

P1 (A), (B) PARK/NEUTRAL POSITION SW (A/T)

(A) 9–(A) 6, (B) 6–(B) 5 : Closed with A/T shift lever in **P** or **N** position

STARTER RELAY

5–3 : Closed with Park/Neutral position SW at **P** or **N** position and ignition SW at **ST** position (A/T)
5–3 : Closed with clutch start SW or clutch start cancel SW on and ignition SW at **ST** position (M/T)

C8 CLUTCH START CANCEL SW (M/T)

1–3 : Closed with ignition SW on and cancel SW on

C9 CLUTCH START SW (M/T)

1–2 : Closed with clutch pedal fully depressed

: PARTS LOCATION

Code	See Page	Code		See Page	Code		See Page
C8	34	J9	A	33 (3RZ–FE, 2RZ–FE)	P1	B	33 (2RZ–FE)
C9	34	J10	B	33 (3RZ–FE, 2RZ–FE)	S1	A	33 (3RZ–FE, 2RZ–FE)
I14	35	P1	A	33 (3RZ–FE)	S2	B	33 (3RZ–FE, 2RZ–FE)

: RELAY BLOCKS

Code	See Page	Relay Blocks (Relay Block Location)
2	21	R/B No.2 (Engine Compartment Left)

: JUNCTION BLOCK AND WIRE HARNESS CONNECTOR

Code	See Page	Junction Block and Wire Harness (Connector Location)
1F	23	Cowl Wire and J/B No.1 (Lower Finish Panel)
1I	23	Engine Room Main Wire and J/B No.1 (Lower Finish Panel)
3A	24	Cowl Wire and J/B No.3 (Behind the Instrument Panel Left)
3D		
3E		

: CONNECTOR JOINING WIRE HARNESS AND WIRE HARNESS

Code	See Page	Joining Wire Harness and Wire Harness (Connector Location)
EA1	42 (3RZ–FE, 2RZ–FE)	Engine Room Main Wire and Engine No.2 Wire (Near the Battery)
IF1	44	Engine Room Main Wire and Cowl Wire (Left Kick Panel)
IK2	44	Engine Wire and Cowl Wire (Above the Glove Box)
IK3		

: GROUND POINTS

Code	See Page	Ground Points Location
EA	42 (3RZ–FE, 2RZ–FE)	Front Left Fender
IE	44	Around the Right Edge of the Reinforcement
IG	44	Around the Left Edge of the Reinforcement

: SPLICE POINTS

Code	See Page	Wire Harness with Splice Points	Code	See Page	Wire Harness with Splice Points
I8	44	Engine Room Main Wire	I9	44	Cowl Wire

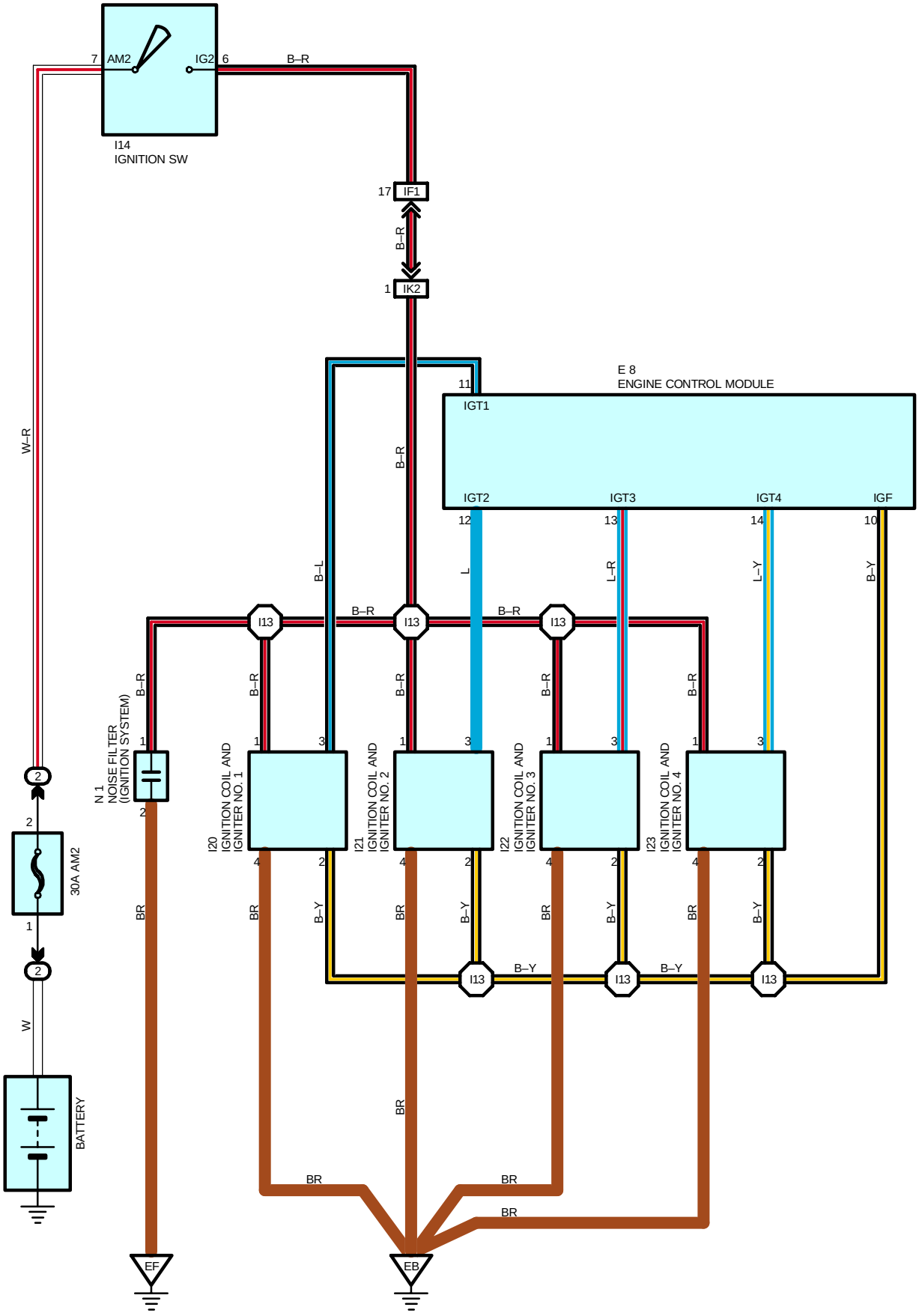
7 AM2
IG2 6
B–R
I14
IGNITION SW
17 IF1
B–R
1 IK2
E 8
ENGINE CONTROL MODULE
11
IGT1
IGT2
IGT3
IGT4
IGF
12
13
14
10
B–L
L
L–R
L–Y
B–Y
W–R
I13
B–R
N 1
NOISE FILTER
(IGNITION SYSTEM)
I20
IGNITION COIL AND
IGNITER NO. 1
I21
IGNITION COIL AND
IGNITER NO. 2
I22
IGNITION COIL AND
IGNITER NO. 3
I23
IGNITION COIL AND
IGNITER NO. 4
BR
B–Y
30A AM2
W
BATTERY
EF
EB

SERVICE HINTS

I14 IGNITION SW

7–6 : Closed with ignition SW at **ON** or **ST** position

: PARTS LOCATION

Code	See Page	Code	See Page	Code	See Page
E8	35	I21	33 (3RZ–FE, 2RZ–FE)	N1	33 (3RZ–FE, 2RZ–FE)
I14	35	I22	33 (3RZ–FE, 2RZ–FE)		
I20	33 (3RZ–FE, 2RZ–FE)	I23	33 (3RZ–FE, 2RZ–FE)		

: RELAY BLOCKS

Code	See Page	Relay Blocks (Relay Block Location)
2	21	R/B No.2 (Engine Compartment Left)

: CONNECTOR JOINING WIRE HARNESS AND WIRE HARNESS

Code	See Page	Joining Wire Harness and Wire Harness (Connector Location)
IF1	44	Engine Room Main Wire and Cowl Wire (Left Kick Panel)
IK2	44	Engine Wire and Cowl Wire (Above the Glove Box)

: GROUND POINTS

Code	See Page	Ground Points Location
EB	42 (3RZ–FE, 2RZ–FE)	Under the Data Link Connector 1
EF	42 (3RZ–FE, 2RZ–FE)	Ignition Coil Braket

: SPLICE POINTS

Code	See Page	Wire Harness with Splice Points	Code	See Page	Wire Harness with Splice Points
I13	44	Engine Wire			

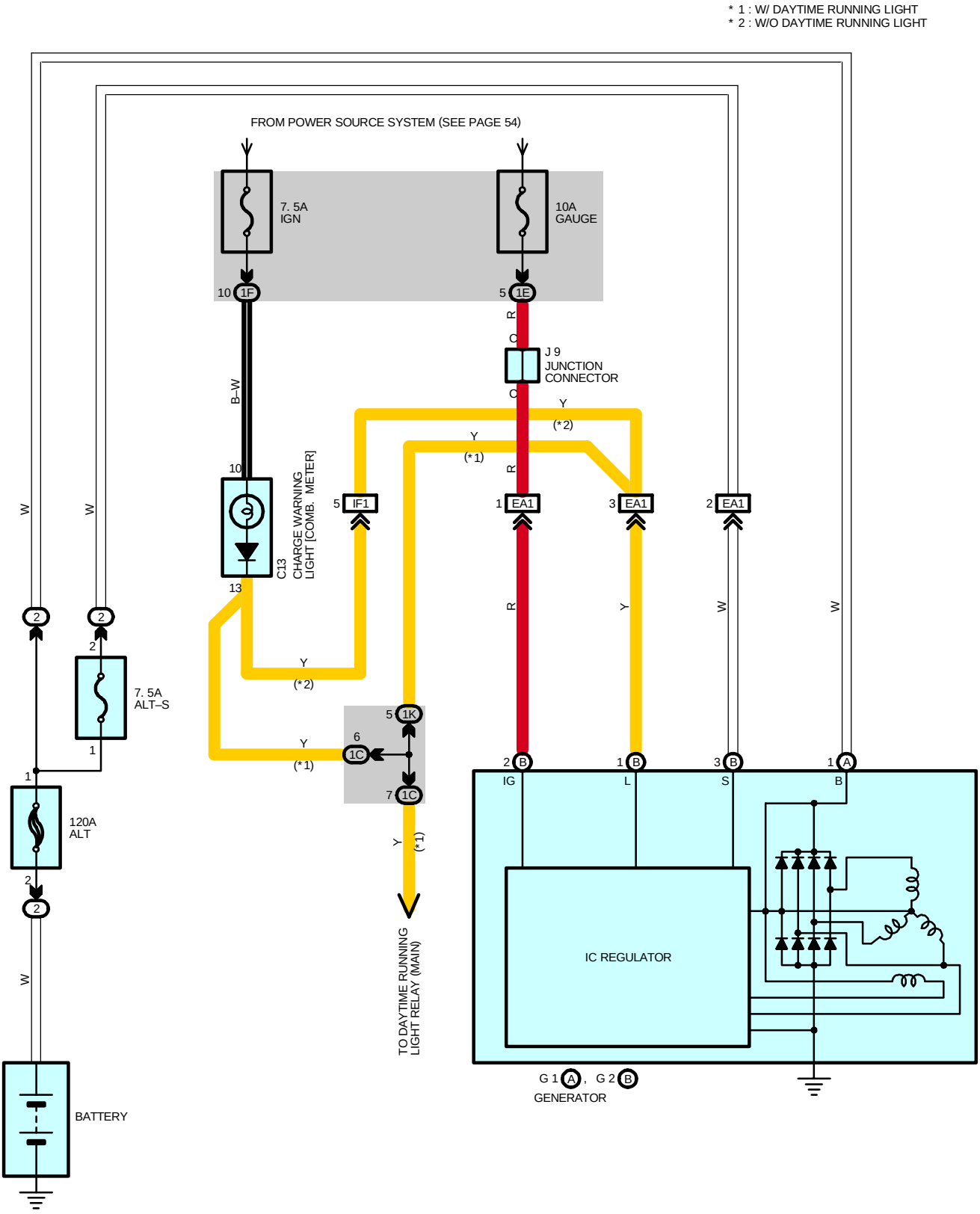
* 1 : W/ DAYTIME RUNNING LIGHT
* 2 : W/O DAYTIME RUNNING LIGHT
FROM POWER SOURCE SYSTEM (SEE PAGE 54)
7. 5A IGN
10A GAUGE
10 1F
5 1E
R
C
J 9 JUNCTION CONNECTOR
C
B–W
Y (*2)
Y (*1)
R
10
C13 CHARGE WARNING LIGHT [COMB. METER]
13
5 IF1
1 EA1
3 EA1
2 EA1
W
W
R
Y
W
W
2
2
2
7. 5A ALT–S
1
1
120A ALT
2
2
W
BATTERY
Y (*2)
Y (*1)
5 1K
6 1C
7 1C
Y (*1)
TO DAYTIME RUNNING LIGHT RELAY (MAIN)
2 B
IG
1 B
L
3 B
S
1 A
B
IC REGULATOR
G 1 A , G 2 B
GENERATOR

SERVICE HINTS

G2 (B) GENERATOR

(B) 3–GROUND : **13.9**–**15.1** volts with engine running at **2000** rpm and **25**˚C (**77**˚F)
13.5–**14.3** volts with engine running at **2000** rpm and **115**˚C (**239**˚F)

(B) 1–GROUND : **0**–**4** volts with ignition SW at **ON** position and engine not running

: PARTS LOCATION

Code		See Page	Code		See Page	Code	See Page
C13		34	G2	B	30 (5VZ–FE)	J9	33 (3RZ–FE, 2RZ–FE)
G1	A	30 (5VZ–FE)			32 (3RZ–FE, 2RZ–FE)		
		32 (3RZ–FE, 2RZ–FE)	J9		31 (5VZ–FE)		

: RELAY BLOCKS

Code	See Page	Relay Blocks (Relay Block Location)
2	21	R/B No.2 (Engine Compartment Left)

: JUNCTION BLOCK AND WIRE HARNESS CONNECTOR

Code	See Page	Junction Block and Wire Harness (Connector Location)
1C	23	Cowl Wire and J/B No.1 (Lower Finish Panel)
1E	23	Engine Room Main Wire and J/B No.1 (Lower Finish Panel)
1F	23	Cowl Wire and J/B No.1 (Lower Finish Panel)
1K	23	Engine Room Main Wire and J/B No.1 (Lower Finish Panel)

: CONNECTOR JOINING WIRE HARNESS AND WIRE HARNESS

Code	See Page	Joining Wire Harness and Wire Harness (Connector Location)
EA1	40 (5VZ–FE)	Engine Room Main Wire and Engine No.2 Wire (Near the Battery)
	42 (3RZ–FE,2RZ–FE)	
IF1	44	Engine Room Main Wire and Cowl Wire (Left Kick Panel)

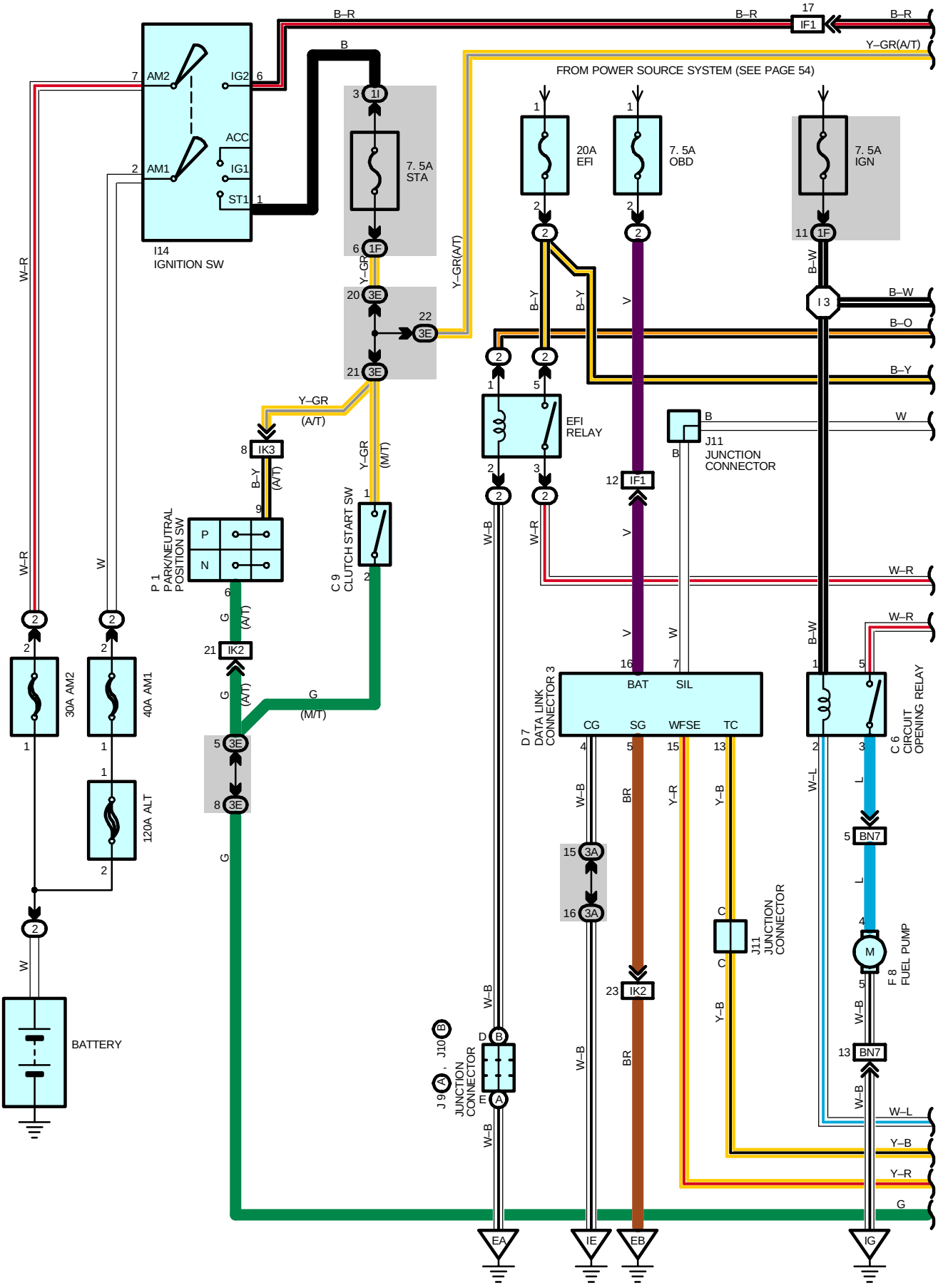
FROM POWER SOURCE SYSTEM (SEE PAGE 54)
I14
IGNITION SW
AM2
AM1
IG2
ACC
IG1
ST1
7. 5A
STA
20A
EFI
7. 5A
OBD
7. 5A
IGN
EFI
RELAY
I 3
J11
JUNCTION
CONNECTOR
P 1
PARK/NEUTRAL
POSITION SW
C 9
CLUTCH START SW
D 7
DATA LINK
CONNECTOR 3
BAT
SIL
CG
SG
WFSE
TC
C 6
CIRCUIT
OPENING RELAY
F 8
FUEL PUMP
J 9
J10
JUNCTION
CONNECTOR
30A AM2
40A AM1
120A ALT
BATTERY
EA
IE
EB
IG
B–R
Y–GR(A/T)
Y–GR
(A/T)
Y–GR
(M/T)
B–Y
B–W
B–O
W–R
W–B
W–L
Y–B
Y–R
BR
G
L
W

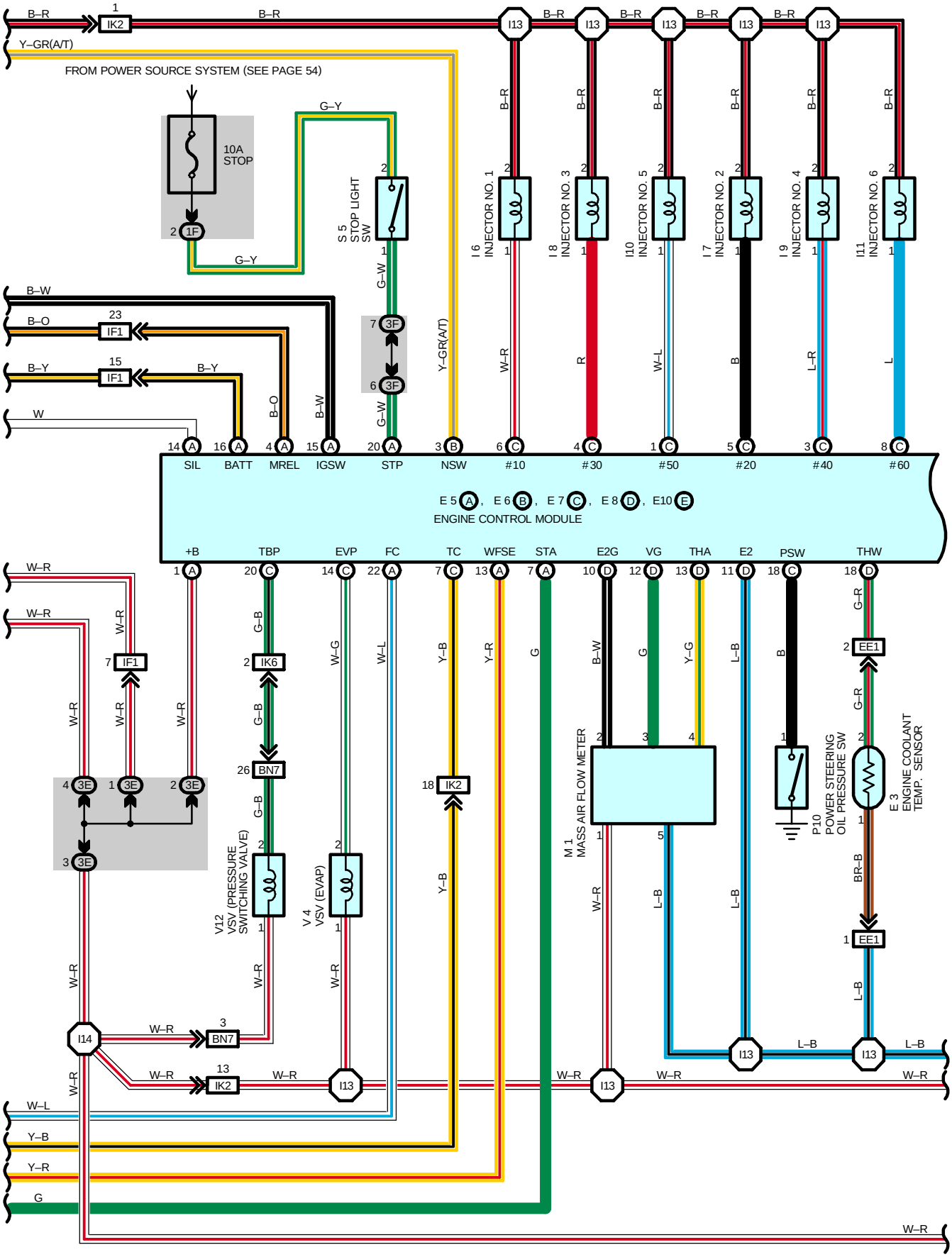
FROM POWER SOURCE SYSTEM (SEE PAGE 54)
10A STOP
S 5 STOP LIGHT SW
I 6 INJECTOR NO. 1
I 8 INJECTOR NO. 3
I10 INJECTOR NO. 5
I 7 INJECTOR NO. 2
I 9 INJECTOR NO. 4
I11 INJECTOR NO. 6
SIL
BATT
MREL
IGSW
STP
NSW
#10
#30
#50
#20
#40
#60
E 5 A , E 6 B , E 7 C , E 8 D , E10 E
ENGINE CONTROL MODULE
+B
TBP
EVP
FC
TC
WFSE
STA
E2G
VG
THA
E2
PSW
THW
V12 VSV (PRESSURE SWITCHING VALVE)
V 4 VSV (EVAP)
M 1 MASS AIR FLOW METER
P10 POWER STEERING OIL PRESSURE SW
E 3 ENGINE COOLANT TEMP. SENSOR

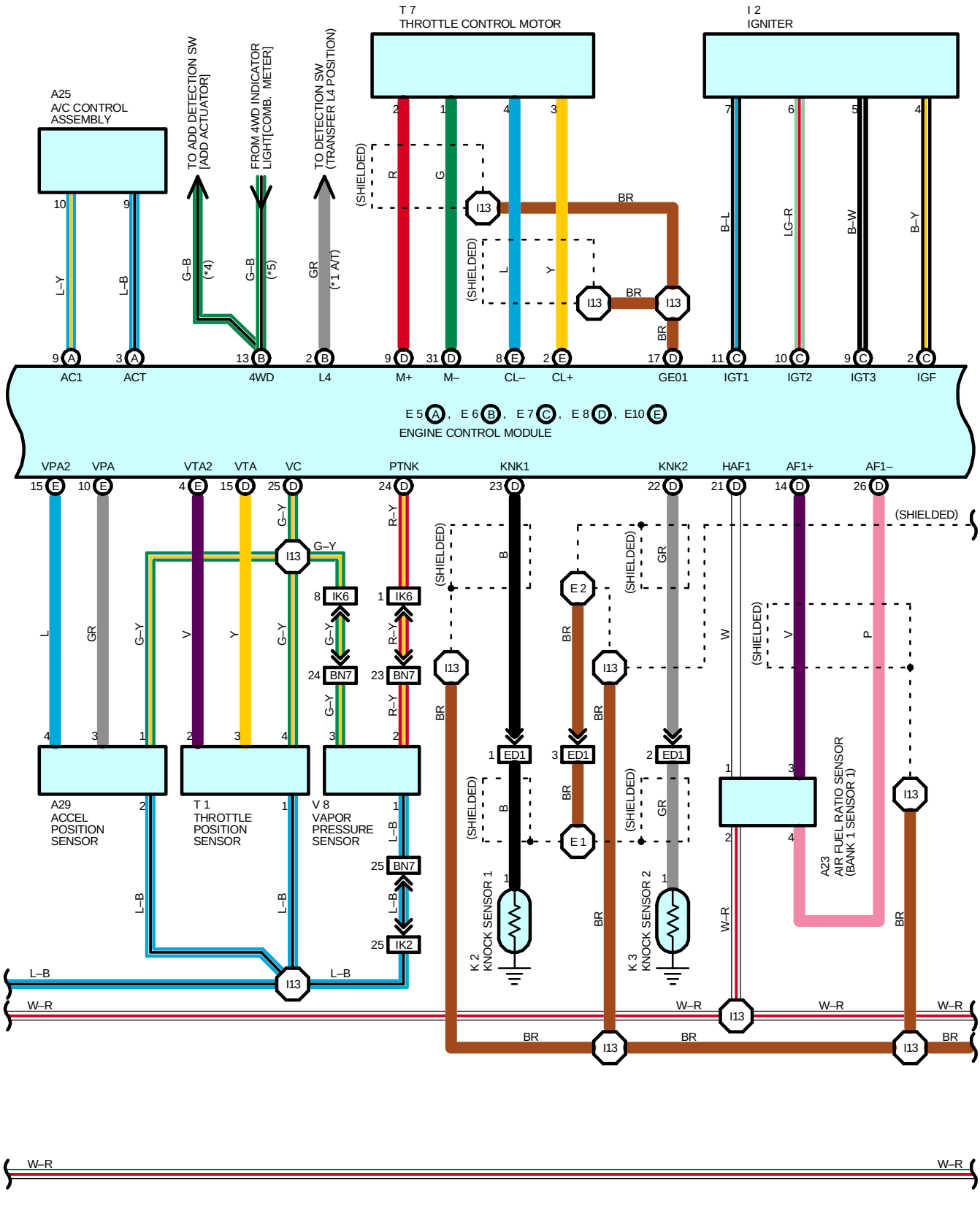
T 7
THROTTLE CONTROL MOTOR
I 2
IGNITER
A25
A/C CONTROL
ASSEMBLY
TO ADD DETECTION SW
[ADD ACTUATOR]
FROM 4WD INDICATOR
LIGHT[COMB. METER]
TO DETECTION SW
(TRANSFER L4 POSITION)
(SHIELDED)
AC1
ACT
4WD
L4
M+
M–
CL–
CL+
GE01
IGT1
IGT2
IGT3
IGF
E 5 A , E 6 B , E 7 C , E 8 D , E10 E
ENGINE CONTROL MODULE
VPA2
VPA
VTA2
VTA
VC
PTNK
KNK1
KNK2
HAF1
AF1+
AF1–
A29
ACCEL
POSITION
SENSOR
T 1
THROTTLE
POSITION
SENSOR
V 8
VAPOR
PRESSURE
SENSOR
K 2
KNOCK SENSOR 1
K 3
KNOCK SENSOR 2
A23
AIR FUEL RATIO SENSOR
(BANK 1 SENSOR 1)
W–R
W–R

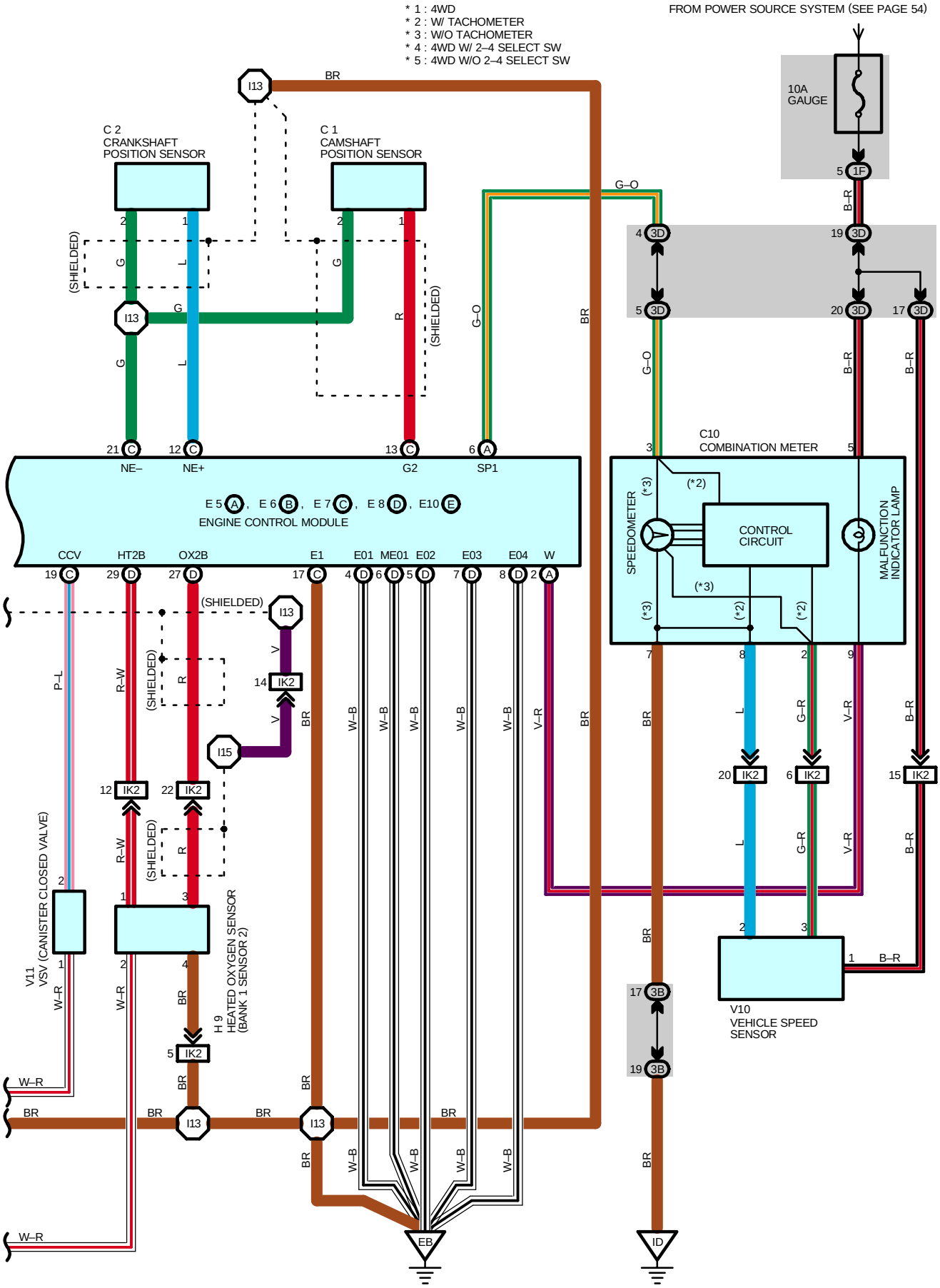
* 1 : 4WD
* 2 : W/ TACHOMETER
* 3 : W/O TACHOMETER
* 4 : 4WD W/ 2–4 SELECT SW
* 5 : 4WD W/O 2–4 SELECT SW
FROM POWER SOURCE SYSTEM (SEE PAGE 54)
10A GAUGE
C 2 CRANKSHAFT POSITION SENSOR
C 1 CAMSHAFT POSITION SENSOR
(SHIELDED)
NE–
NE+
G2
SP1
E5 A, E6 B, E7 C, E8 D, E10 E
ENGINE CONTROL MODULE
C10 COMBINATION METER
SPEEDOMETER
CONTROL CIRCUIT
MALFUNCTION INDICATOR LAMP
CCV
HT2B
OX2B
E1
E01
ME01
E02
E03
E04
W
V11 VSV (CANISTER CLOSED VALVE)
H 9 HEATED OXYGEN SENSOR (BANK 1 SENSOR 2)
V10 VEHICLE SPEED SENSOR
EB
ID

SYSTEM OUTLINE

The engine control system utilizes a microcomputer and maintains overall control of the engine, transmission, etc. An outline of engine control is given here.

1. INPUT SIGNAL

(1) Engine coolant temp. signal system

The engine coolant temp. sensor detects the engine coolant temp. and has a built–in thermistor with a resistance which varies according to the water temp. Thus the engine coolant temp. is input in the form of a control signal to TERMINAL THW of the engine control module.

(2) Intake air temp. signal system

The intake air temp. sensor is installed inside the mass air flow meter and detects the intake air temp., which is input as a control signal to TERMINAL THA of the engine control module.

(3) Heated oxygen sensor signal system

The oxygen density in the exhaust emissions is detected and input as a control signal to TERMINAL OX2B of the engine control module. To maintain stable detection performance by the heated oxygen sensor, a heater is used for warming the sensor. The heater is also controlled by the engine control module (HT2B).

(4) RPM signal system

Camshaft position and crankshaft position are detected by the camshaft position sensor and crankshaft position sensor, camshaft position is input as a control signal to TERMINAL G2 of the engine control module, and engine RPM is input to TERMINAL NE+.

(5) Throttle signal system

The throttle position sensor detects the throttle valve opening angle, which is input as a control signal to TERMINAL VTA of the engine control module.

(6) Vehicle speed signal system

The vehicle speed sensor detects the vehicle speed and inputs a control signal to TERMINAL SP1 of the engine control module via the combination meter.

(7) A/C SW signal system

The operating voltage of the A/C magnetic clutch is detected and input in the form of a control signal to TERMINAL AC1 of the engine control module.

(8) Battery signal system

Voltage is constantly applied to TERMINAL BATT of the engine control module. When the ignition SW is turned to on, voltage for engine control module operation is applied via the EFI relay to TERMINAL +B of the engine control module.

(9) Intake air volume signal system

Intake air volume is detected by the mass air flow meter and a signal is input into TERMINAL VG of the engine control module as a control signal.

(10) Stop light SW signal system

The stop light SW is used to detect whether or not the vehicle is braking and the information is input as a control signal to TERMINAL STP of the engine control module.

(11) Starter signal system

To confirm that the engine is cranking, the voltage applied to the starter motor during cranking is detected and is input as a control signal to TERMINAL STA of the engine control module.

(12) Engine knock signal system

Engine knocking is detected by the knock sensor 1 and 2 and the signals are input to TERMINALS KNK1 and KNK2 of the engine control module.

(13) 4WD signal system

Whether or not the vehicle is operating in 4WD mode is determined, and a control signal is input to TERMINAL 4WD of the engine control module.

(14) Air fuel ratio signal system

The air fuel ratio is detected and input as a control signal into TERMINAL AF1+ of the engine control module.

2. CONTROL SYSTEM

* SFI system
  The SFI system monitors the engine conditions through the signals (Input signals (1 to 13)) input from each sensor to the engine control module. Based on this data and the program memorized in the engine control module, the most appropriate fuel injection timing is decided and current is output to TERMINALS #10, #20, #30, #40, #50 and #60 of the engine control module, causing the injectors to operate (to inject fuel). It is this system which, through the work of the engine control module, finely controls fuel injection in response to driving conditions.
* Electronic Spark Advance system
  The ESA system monitors the engine conditions using the signals (input signals (1, 4, 5 to 7, 9, 11, 12)) input to the engine control module from each sensor. Based on this data and the program memorized in the engine control module, the most appropriate ignition timing is decided and current is output to TERMINALS IGT1,IGT2 and IGT3 of the engine control module. This output controls the igniter to produce the most appropriate ignition timing for the driving conditions.
* Heated oxygen sensor heater control system
  The heated oxygen sensor heater control system turns the heater to on when the intake air volume is low (Temp. of exhaust emissions low), and warms up the heated oxygen sensor to improve detection performance of the sensor. The engine control module evaluates the signals (Input signals (1, 4, 8, 9, 11)) from each sensor, current is output to TERMINAL HT2B and controls the heater.

3. DIAGNOSIS SYSTEM

With the diagnosis system, when there is a malfunction in the ECU signal system, the malfunctioning system is recorded in the memory. The malfunctioning system can then be found by reading the display (Code) of the malfunction indicator lamp.

4. FAIL–SAFE SYSTEM

When a malfunction occurs in any system, if there is a possibility of engine trouble being caused by continued control based on the signals from that system, the fail–safe system either controls the system by using data (Standard values) recorded in the engine control module memory or else stops the engine.

ENGINE CONTROL (5VZ–FE EXCEPT 2WD M/T)

SERVICE HINTS

EFI RELAY

5–3 : Closed with ignition SW at **ON** or **ST** position

C6 CIRCUIT OPENING RELAY

5–3 : Closed with starter running or ignition SW at **ON** or **ST** position

I6, I7, I8, I9, I10, I11 INJECTOR

1–2 : **13.4**–**14.2** Ω

T1 THROTTLE POSITION SENSOR

2–1 : **4**–**9** kΩ

E3 ENGINE COOLANT TEMP. SENSOR

1–2 : **10**–**20** kΩ (**–20**˚C, **–4**˚F)
4–**7** kΩ (**0**˚C, **32**˚F)
2–**3** kΩ (**20**˚C, **68**˚F)
0.9–**1.3** kΩ (**40**˚C, **104**˚F)
0.4–**0.7** kΩ (**60**˚C, **140**˚F)
0.2–**0.4** kΩ (**80**˚C, **176**˚F)

E5 (A), E6 (B), E7 (C), E8 (D), E10 (E) ENGINE CONTROL MODULE

Voltage at engine control module wiring connectors
+B–E1 : **9**–**14** volts (Ignition SW on)
BATT–E1 : **9**–**14** volts (Always)
VC–E2 : **4.5**–**5.5** volts (Ignition SW on)
VTA–E2 : **0.3**–**0.8** volts (Ignition SW on and throttle valve fully closed)
3.2–**4.9** volts (Ignition SW on and throttle valve fully open)
STA–E1 : **6** volts or more (Ignition SW at **ST** position)
W–E1 : **9**–**14** volts (No trouble and engine running)
THA–E2 : **0.5**–**3.4** volts (Ignition SW on and intake air temp. **20**˚C, **68**˚F)
THW–E2 : **0.2**–**1.0** volts (Ignition SW on and coolant temp. **80**˚C, **176**˚F)
SP1–E1 : Pulse generation with vehicle moving
STP–E1 : **7.5**–**14** volts (Stop light SW on)
IGT1, IGT2, IGT3–E1 : Pulse generation (Cranking or idling)
#10, #20, #30, #40, #50, #60–E1 : **9**–**14** volts (Ignition SW on)

RESISTANCE AT ECU WIRING CONNECTOR

(Disconnect wiring connector)
VTA–E2 : **3.3**–**10** kΩ (Throttle valve fully open)
0.2–**0.8** kΩ (Throttle valve fully closed)
THA–E2 : **2**–**3** kΩ (Intake air temp. **20**˚C, **68**˚F)
THW–E2 : **0.2**–**0.4** KΩ (Coolant temp. **80**˚C, **178**˚F)
+B–E1 : **0.2**–**0.4** kΩ
NE+ –E1 : **140**–**180** Ω

○ : PARTS LOCATION

Code	See Page	Code	See Page	Code	See Page
A23	30 (5VZ–FE)	F8	36 (Double Cab)	K2	31 (5VZ–FE)
A25	34		37 (Except Double Cab)	K3	31 (5VZ–FE)
C1	30 (5VZ–FE)	H9	35	M1	31 (5VZ–FE)
C2	30 (5VZ–FE)	I2	31 (5VZ–FE)	P1	31 (5VZ–FE)
C6	34	I6	31 (5VZ–FE)	P10	31 (5VZ–FE)
C9	34	I7	31 (5VZ–FE)	S5	35
C10	34	I8	31 (5VZ–FE)	T1	31 (5VZ–FE)
D7	34	I9	31 (5VZ–FE)	V4	31 (5VZ–FE)
E3	30 (5VZ–FE)	I10	31 (5VZ–FE)	V8	36 (Double Cab)
E5 A	35	I11	31 (5VZ–FE)		37 (Except Double Cab)
E6 B	35	I14	35	V10	31 (5VZ–FE)
E7 C	35	J9 A	31 (5VZ–FE)	V11	31 (5VZ–FE)
E8 D	35	J10 B	31 (5VZ–FE)	V12	36 (Double Cab)
E10 E	35	J11	35		37 (Except Double Cab)

: RELAY BLOCKS

Code	See Page	Relay Blocks (Relay Block Location)
2	21	R/B No.2 (Engine Compartment Left)

: JUNCTION BLOCK AND WIRE HARNESS CONNECTOR

Code	See Page	Junction Block and Wire Harness (Connector Location)
1F	23	Cowl Wire and J/B No.1 (Lower Finish Panel)
1I	23	Engine Room Main Wire and J/B No.1 (Lower Finish Panel)
3A	24	Cowl Wire and J/B No.3 (Behind the Instrument Panel Left)
3B		
3D		
3E		
3F		

: CONNECTOR JOINING WIRE HARNESS AND WIRE HARNESS

Code	See Page	Joining Wire Harness and Wire Harness (Connector Location)
ED1	40 (5VZ–FE)	Sensor Wire and Engine Wire (Over the Cylinder Head)
EE1	40 (5VZ–FE)	Engine Wire and Sensor Wire (Over the Cylinder Head)
IF1	44	Engine Room Main Wire and Cowl Wire (Left Kick Panel)
IK2	44	Engine Wire and Cowl Wire (Above the Glove Box)
IK3		
IK6		
BN7	46 (Double Cab) 48 (Except Double Cab)	Frame Wire and Cowl Wire (Under the Driver's Seat)

: GROUND POINTS

Code	See Page	Ground Points Location
EA	40 (5VZ–FE)	Front Left Fender
EB	40 (5VZ–FE)	Near the Throttle Body
ID	44	Left Kick Panel
IE	44	Around the Right Edge of the Reinforcement
IG	44	Around the Left Edge of the Reinforcement

: SPLICE POINTS

Code	See Page	Wire Harness with Splice Points	Code	See Page	Wire Harness with Splice Points
E1	40 (5VZ–FE)	Sensor Wire	I13	44	Engine Wire
E2	40 (5VZ–FE)	Engine Wire	I14	44	Cowl Wire
I3	44	Cowl Wire	I15		

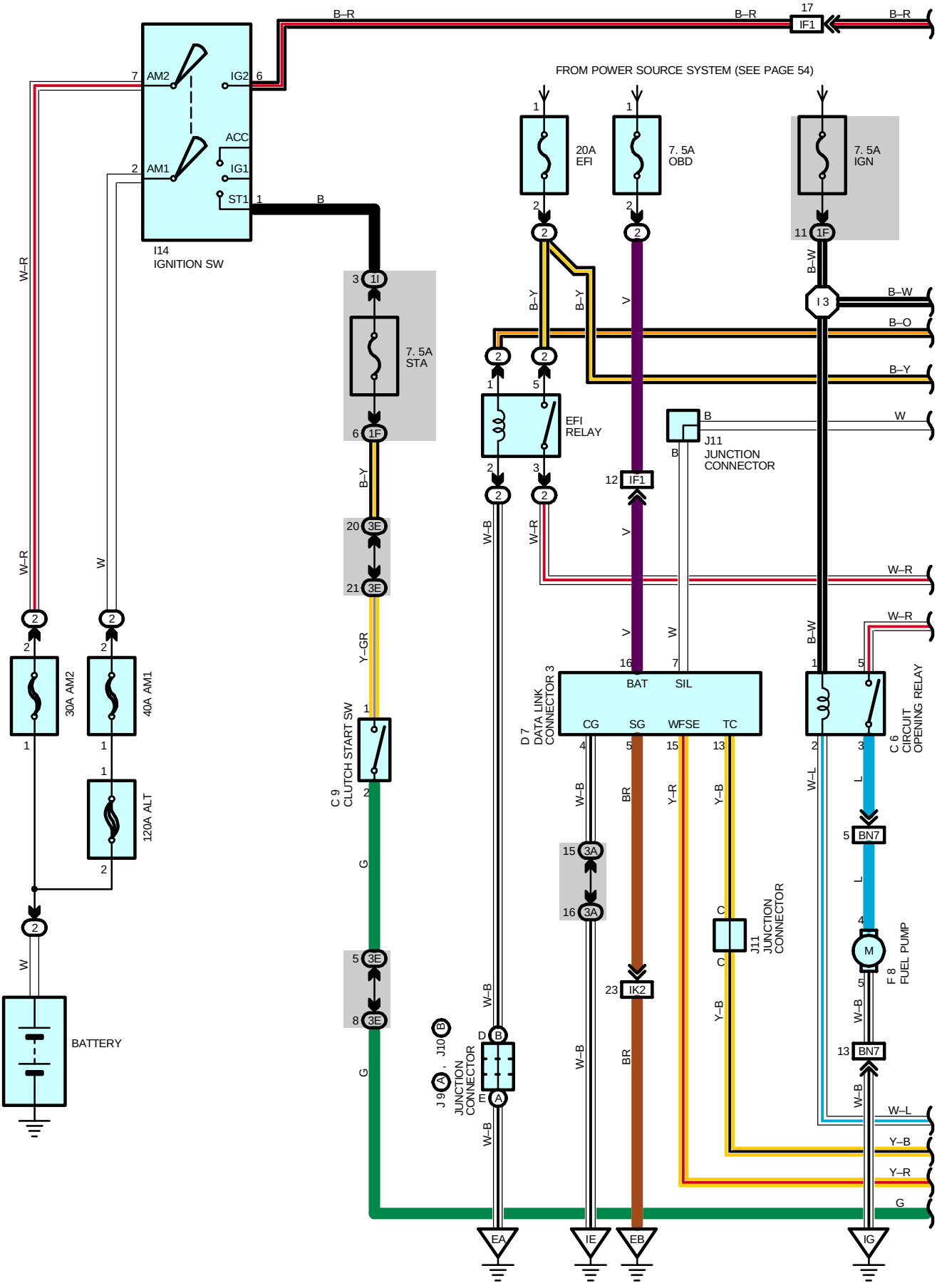
FROM POWER SOURCE SYSTEM (SEE PAGE 54)
I14
IGNITION SW
AM2
AM1
IG2
ACC
IG1
ST1
20A
EFI
7. 5A
OBD
7. 5A
IGN
7. 5A
STA
EFI
RELAY
J11
JUNCTION
CONNECTOR
I 3
IF1
1F
3E
BAT
SIL
CG
SG
WFSE
TC
D 7
DATA LINK
CONNECTOR 3
C 9
CLUTCH START SW
C 6
CIRCUIT
OPENING RELAY
30A AM2
40A AM1
120A ALT
BATTERY
3A
IK2
BN7
F 8
FUEL PUMP
J10
J9
JUNCTION
CONNECTOR
EA
IE
EB
IG
B–R
W–R
W
B–Y
Y–GR
G
W–B
V
B–W
B–O
W–L
Y–B
Y–R
BR
L

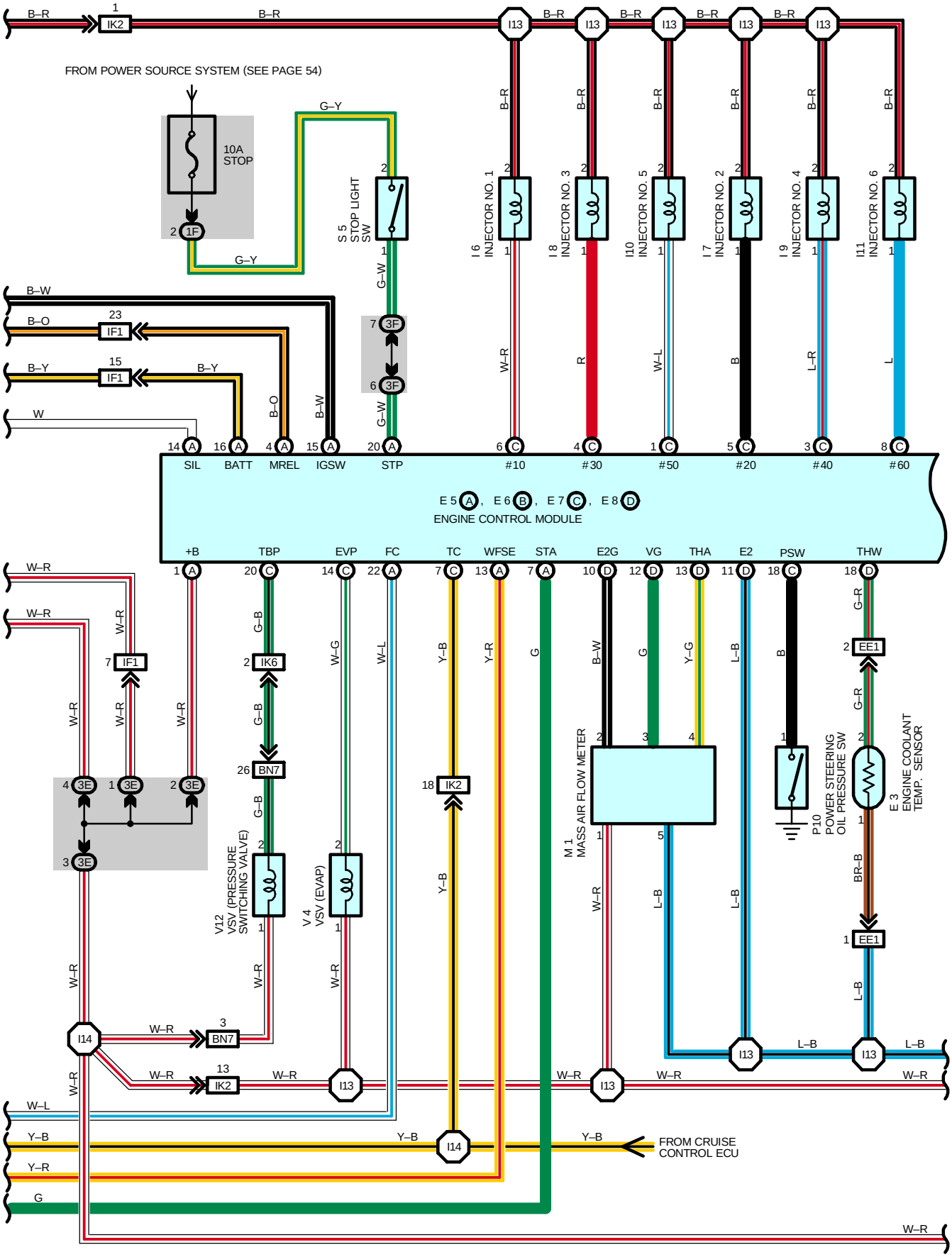
FROM POWER SOURCE SYSTEM (SEE PAGE 54)
10A STOP
S 5 STOP LIGHT SW
I 6 INJECTOR NO. 1
I 8 INJECTOR NO. 3
I10 INJECTOR NO. 5
I 7 INJECTOR NO. 2
I 9 INJECTOR NO. 4
I11 INJECTOR NO. 6
SIL
BATT
MREL
IGSW
STP
#10
#30
#50
#20
#40
#60
E 5 (A), E 6 (B), E 7 (C), E 8 (D)
ENGINE CONTROL MODULE
+B
TBP
EVP
FC
TC
WFSE
STA
E2G
VG
THA
E2
PSW
THW
V12 VSV (PRESSURE SWITCHING VALVE)
V 4 VSV (EVAP)
M 1 MASS AIR FLOW METER
P10 POWER STEERING OIL PRESSURE SW
E 3 ENGINE COOLANT TEMP. SENSOR
FROM CRUISE CONTROL ECU

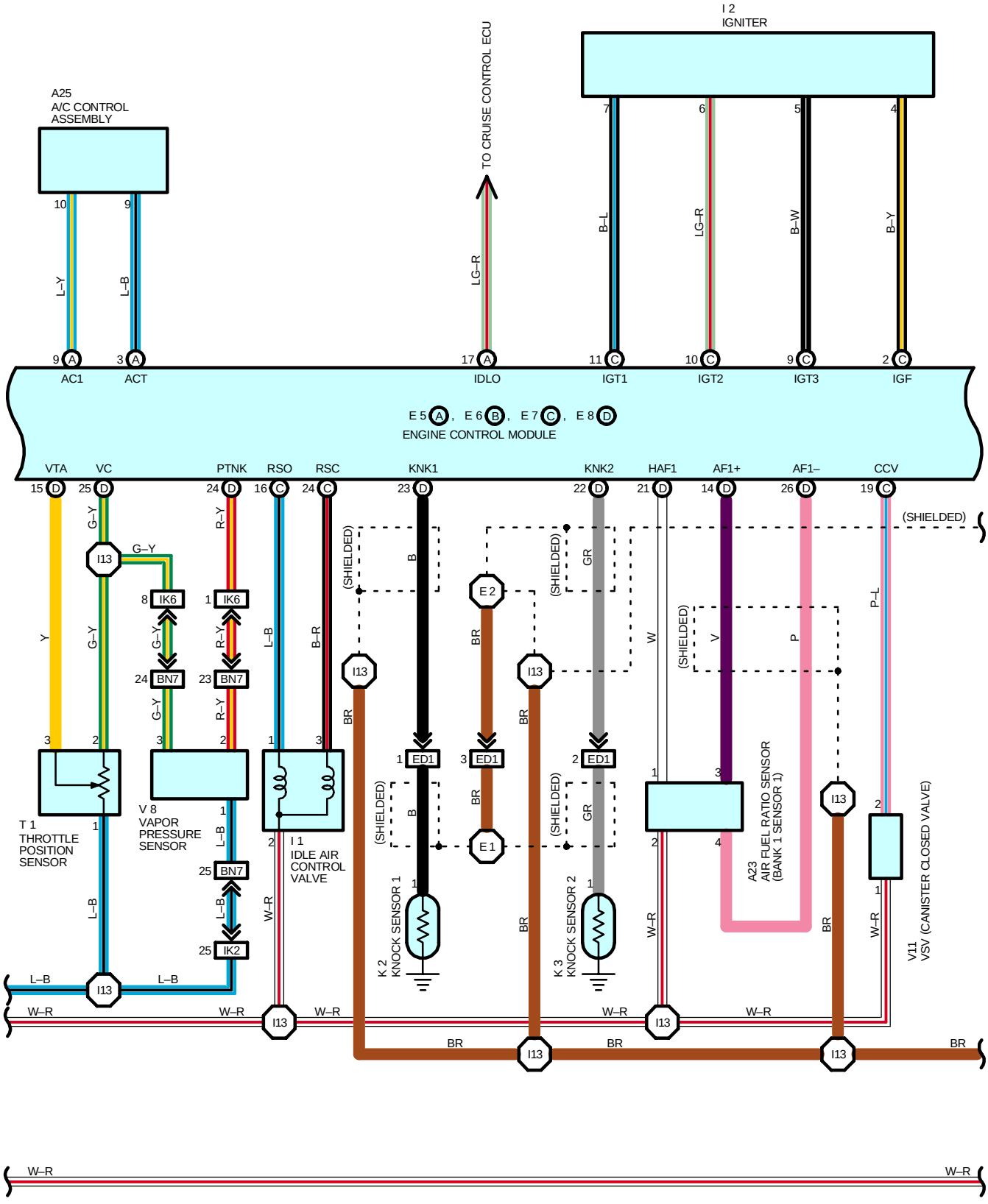
I 2
IGNITER
TO CRUISE CONTROL ECU
A25
A/C CONTROL
ASSEMBLY
AC1
ACT
IDLO
IGT1
IGT2
IGT3
IGF
E5 A , E6 B , E7 C , E8 D
ENGINE CONTROL MODULE
VTA
VC
PTNK
RSO
RSC
KNK1
KNK2
HAF1
AF1+
AF1–
CCV
T 1
THROTTLE
POSITION
SENSOR
V 8
VAPOR
PRESSURE
SENSOR
I 1
IDLE AIR
CONTROL
VALVE
K 2
KNOCK SENSOR 1
K 3
KNOCK SENSOR 2
A23
AIR FUEL RATIO SENSOR
(BANK 1 SENSOR 1)
V11
VSV (CANISTER CLOSED VALVE)
(SHIELDED)
I13
IK6
IK2
BN7
ED1
E2
E1

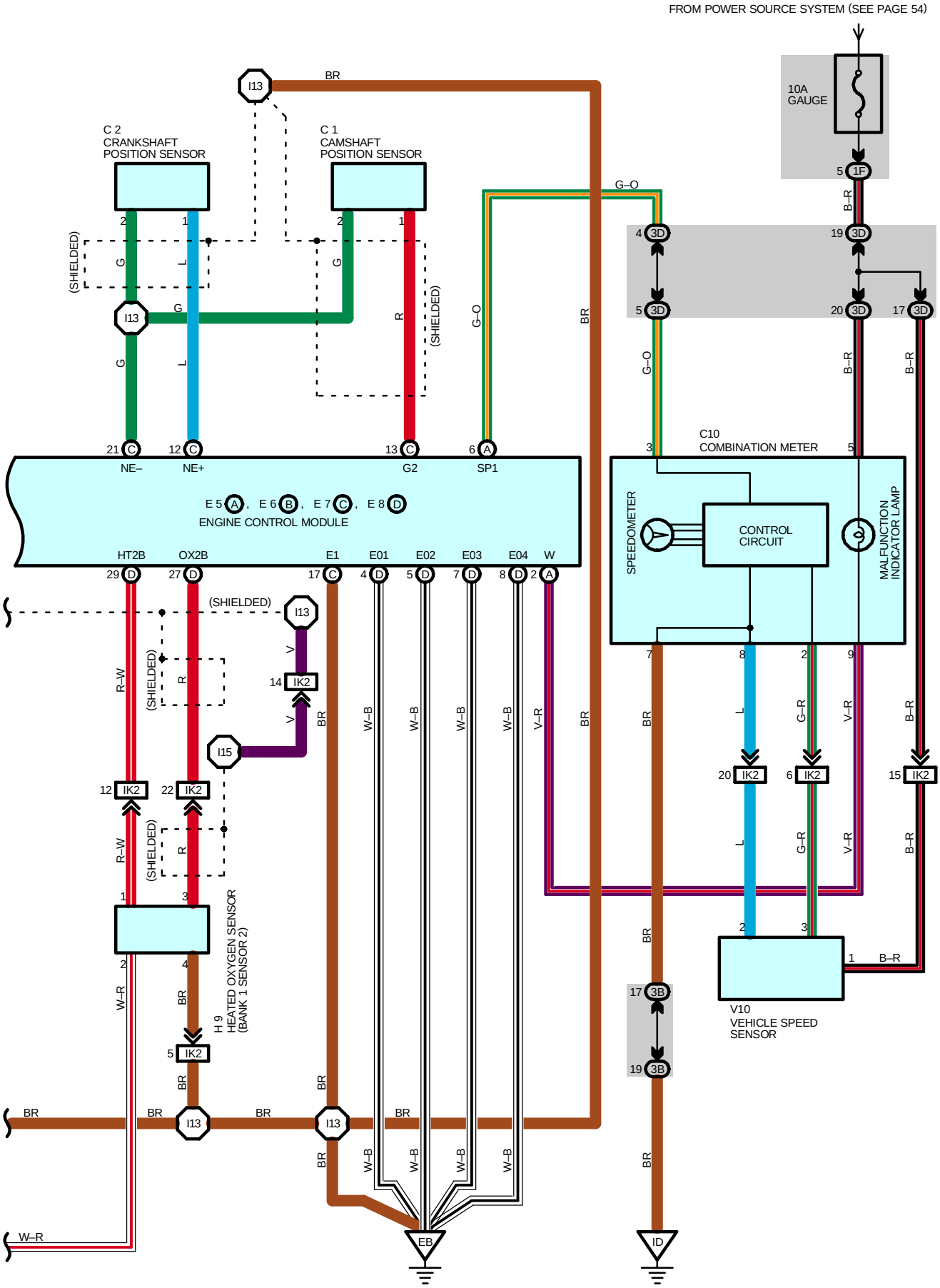
FROM POWER SOURCE SYSTEM (SEE PAGE 54)
10A
GAUGE
5 1F
B–R
C 2
CRANKSHAFT
POSITION SENSOR
C 1
CAMSHAFT
POSITION SENSOR
I13
BR
G–O
4 3D
19 3D
5 3D
20 3D
17 3D
(SHIELDED)
G
L
R
21 C
12 C
13 C
6 A
NE–
NE+
G2
SP1
C10
COMBINATION METER
SPEEDOMETER
CONTROL
CIRCUIT
MALFUNCTION
INDICATOR LAMP
E5 A, E6 B, E7 C, E8 D
ENGINE CONTROL MODULE
HT2B
OX2B
E1
E01
E02
E03
E04
W
29 D
27 D
17 C
4 D
5 D
7 D
8 D
2 A
R–W
V
14 IK2
I15
12 IK2
22 IK2
W–B
V–R
L
G–R
20 IK2
6 IK2
15 IK2
B–R
1
3
2
4
W–R
H 9
HEATED OXYGEN SENSOR
(BANK 1 SENSOR 2)
5 IK2
17 3B
19 3B
V10
VEHICLE SPEED
SENSOR
EB
ID

SYSTEM OUTLINE

The engine control system utilizes a microcomputer and maintains overall control of the engine, transmission, etc. An outline of engine control is given here.

1. INPUT SIGNAL

(1) Engine coolant temp. signal system

The engine coolant temp. sensor detects the engine coolant temp. and has a built–in thermistor with a resistance which varies according to the water temp. Thus the engine coolant temp. is input in the form of a control signal to TERMINAL THW of the engine control module.

(2) Intake air temp. signal system

The intake air temp. sensor is installed inside the mass air flow meter and detects the intake air temp., which is input as a control signal to TERMINAL THA of the engine control module.

(3) Heated oxygen sensor signal system

The oxygen density in the exhaust emissions is detected and input as a control signal to TERMINAL OX2B of the engine control module. To maintain stable detection performance by the heated oxygen sensor, a heater is used for warming the sensor. The heater is also controlled by the engine control module (HT2B).

(4) RPM signal system

Camshaft position and crankshaft position are detected by the camshaft position sensor and crankshaft position sensor, camshaft position is input as a control signal to TERMINAL G2 of the engine control module, and engine RPM is input to TERMINAL NE+.

(5) Throttle signal system

The throttle position sensor detects the throttle valve opening angle, which is input as a control signal to TERMINAL VTA of the engine control module.

(6) Vehicle speed signal system

The vehicle speed sensor detects the vehicle speed and inputs a control signal to TERMINAL SP1 of the engine control module via the combination meter.

(7) A/C SW signal system

The operating voltage of the A/C magnetic clutch is detected and input in the form of a control signal to TERMINAL AC1 of the engine control module.

(8) Battery signal system

Voltage is constantly applied to TERMINAL BATT of the engine control module. When the ignition SW is turned to on, voltage for engine control module operation is applied via the EFI relay to TERMINAL +B of the engine control module.

(9) Intake air volume signal system

Intake air volume is detected by the mass air flow meter and a signal is input into TERMINAL VG of the engine control module as a control signal.

(10) Stop light SW signal system

The stop light SW is used to detect whether or not the vehicle is braking and the information is input as a control signal to TERMINAL STP of the engine control module.

(11) Starter signal system

To confirm that the engine is cranking, the voltage applied to the starter motor during cranking is detected and is input as a control signal to TERMINAL STA of the engine control module.

(12) Engine knock signal system

Engine knocking is detected by the knock sensor 1 and 2 and the signals are input to TERMINALS KNK1 and KNK2 of the engine control module.

(13) 4WD signal system

Whether or not the vehicle is operating in 4WD mode is determined, and a control signal is input to TERMINAL 4WD of the engine control module.

(14) Air fuel ratio signal system

The air fuel ratio is detected and input as a control signal into TERMINAL AF1+ of the engine control module.

2. CONTROL SYSTEM

* SFI system
  The SFI system monitors the engine conditions through the signals (Input signals (1 to 13)) input from each sensor to the engine control module. Based on this data and the program memorized in the engine control module, the most appropriate fuel injection timing is decided and current is output to TERMINALS #10, #20, #30, #40, #50 and #60 of the engine control module, causing the injectors to operate (to inject fuel). It is this system which, through the work of the engine control module, finely controls fuel injection in response to driving conditions.
* Electronic Spark Advance system
  The ESA system monitors the engine conditions using the signals (input signals (1, 4, 5 to 7, 9, 11, 12)) input to the engine control module from each sensor. Based on this data and the program memorized in the engine control module, the most appropriate ignition timing is decided and current is output to TERMINALS IGT1,IGT2 and IGT3 of the engine control module. This output controls the igniter to produce the most appropriate ignition timing for the driving conditions.
* Heated oxygen sensor heater control system
  The heated oxygen sensor heater control system turns the heater to on when the intake air volume is low (Temp. of exhaust emissions low), and warms up the heated oxygen sensor to improve detection performance of the sensor. The engine control module evaluates the signals (Input signals (1, 4, 8, 9, 11)) from each sensor, current is output to TERMINAL HT2B and controls the heater.

3. DIAGNOSIS SYSTEM

With the diagnosis system, when there is a malfunction in the ECU signal system, the malfunctioning system is recorded in the memory. The malfunctioning system can then be found by reading the display (Code) of the malfunction indicator lamp.

4. FAIL–SAFE SYSTEM

When a malfunction occurs in any system, if there is a possibility of engine trouble being caused by continued control based on the signals from that system, the fail–safe system either controls the system by using data (Standard values) recorded in the engine control module memory or else stops the engine.

SERVICE HINTS

EFI RELAY

5–3 : Closed with ignition SW at **ON** or **ST** position

C6 CIRCUIT OPENING RELAY

5–3 : Closed with starter running or ignition SW at **ON** or **ST** position

I6, I7, I8, I9, I10, I11 INJECTOR

1–2 : **13.4**–**14.2** Ω

T1 THROTTLE POSITION SENSOR

2–1 : **4**–**9** kΩ

E3 ENGINE COOLANT TEMP. SENSOR

1–2 : **10**–**20** kΩ (**–20**˚C, **–4**˚F)
4–**7** kΩ (**0**˚C, **32**˚F)
2–**3** kΩ (**20**˚C, **68**˚F)
0.9–**1.3** kΩ (**40**˚C, **104**˚F)
0.4–**0.7** kΩ (**60**˚C, **140**˚F)
0.2–**0.4** kΩ (**80**˚C, **176**˚F)

E5 (A), E6 (B), E7 (C), E8 (D) ENGINE CONTROL MODULE

Voltage at engine control module wiring connectors
+B–E1 : **9**–**14** volts (Ignition SW on)
BATT–E1 : **9**–**14** volts (Always)
VC–E2 : **4.5**–**5.5** volts (Ignition SW on)
VTA–E2 : **0.3**–**0.8** volts (Ignition SW on and throttle valve fully closed)
3.2–**4.9** volts (Ignition SW on and throttle valve fully open)
STA–E1 : **6** volts or more (Ignition SW at **ST** position)
W–E1 : **9**–**14** volts (No trouble and engine running)
THA–E2 : **0.5**–**3.4** volts (Ignition SW on and intake air temp. **20**˚C, **68**˚F)
THW–E2 : **0.2**–**1.0** volts (Ignition SW on and coolant temp. **80**˚C, **176**˚F)
SP1–E1 : Pulse generation with vehicle moving
STP–E1 : **7.5**–**14** volts (Stop light SW on)
IGT1, IGT2, IGT3–E1 : Pulse generation (Cranking or idling)
#10, #20, #30, #40, #50, #60–E1 : **9**–**14** volts (Ignition SW on)

RESISTANCE AT ECU WIRING CONNECTOR

(Disconnect wiring connector)
VTA–E2 : **3.3**–**10** kΩ (Throttle valve fully open)
0.2–**0.8** kΩ (Throttle valve fully closed)
THA–E2 : **2**–**3** kΩ (Intake air temp. **20**˚C, **68**˚F)
THW–E2 : **0.2**–**0.4** KΩ (Coolant temp. **80**˚C, **178**˚F)
+B–E1 : **0.2**–**0.4** kΩ
NE+ –E1 : **140**–**180** Ω

○ : PARTS LOCATION

Code	See Page	Code	See Page	Code	See Page
A23	30 (5VZ–FE)	F8	37 (Except Double Cab)	K2	31 (5VZ–FE)
A25	34	H9	35	K3	31 (5VZ–FE)
C1	30 (5VZ–FE)	I1	31 (5VZ–FE)	M1	31 (5VZ–FE)
C2	30 (5VZ–FE)	I2	31 (5VZ–FE)	P10	31 (5VZ–FE)
C6	34	I6	31 (5VZ–FE)	S5	35
C9	34	I7	31 (5VZ–FE)	T1	31 (5VZ–FE)
C10	34	I8	31 (5VZ–FE)	V4	31 (5VZ–FE)
D7	34	I9	31 (5VZ–FE)	V8	36 (Double Cab)
E3	30 (5VZ–FE)	I10	31 (5VZ–FE)		37 (Except Double Cab)
E5 A	35	I11	31 (5VZ–FE)	V10	31 (5VZ–FE)
E6 B	35	I14	35	V11	31 (5VZ–FE)
E7 C	35	J9 A	31 (5VZ–FE)	V12	36 (Double Cab)
E8 D	35	J10 B	31 (5VZ–FE)		37 (Except Double Cab)
F8	36 (Double Cab)	J11	35		

: RELAY BLOCKS

Code	See Page	Relay Blocks (Relay Block Location)
2	21	R/B No.2 (Engine Compartment Left)

: JUNCTION BLOCK AND WIRE HARNESS CONNECTOR

Code	See Page	Junction Block and Wire Harness (Connector Location)
1F	23	Cowl Wire and J/B No.1 (Lower Finish Panel)
1I	23	Engine Room Main Wire and J/B No.1 (Lower Finish Panel)
3A	24	Cowl Wire and J/B No.3 (Behind the Instrument Panel Left)
3B		
3D		
3E		
3F		

: CONNECTOR JOINING WIRE HARNESS AND WIRE HARNESS

Code	See Page	Joining Wire Harness and Wire Harness (Connector Location)
ED1	40 (5VZ–FE)	Sensor Wire and Engine Wire (Over the Cylinder Head)
EE1	40 (5VZ–FE)	Engine Wire and Sensor Wire (Over the Cylinder Head)
IF1	44	Engine Room Main Wire and Cowl Wire (Left Kick Panel)
IK2	44	Engine Wire and Cowl Wire (Above the Glove Box)
IK6		
BN7	46 (Double Cab)	Frame Wire and Cowl Wire (Under the Driver's Seat)
	48 (Except Double Cab)	

: GROUND POINTS

Code	See Page	Ground Points Location
EA	40 (5VZ–FE)	Front Left Fender
EB	40 (5VZ–FE)	Near the Throttle Body
ID	44	Left Kick Panel
IE	44	Around the Right Edge of the Reinforcement
IG	44	Around the Left Edge of the Reinforcement

: SPLICE POINTS

Code	See Page	Wire Harness with Splice Points	Code	See Page	Wire Harness with Splice Points
E1	40 (5VZ–FE)	Sensor Wire	I13	44	Engine Wire
E2	40 (5VZ–FE)	Engine Wire	I14	44	Cowl Wire
I3	44	Cowl Wire	I15		

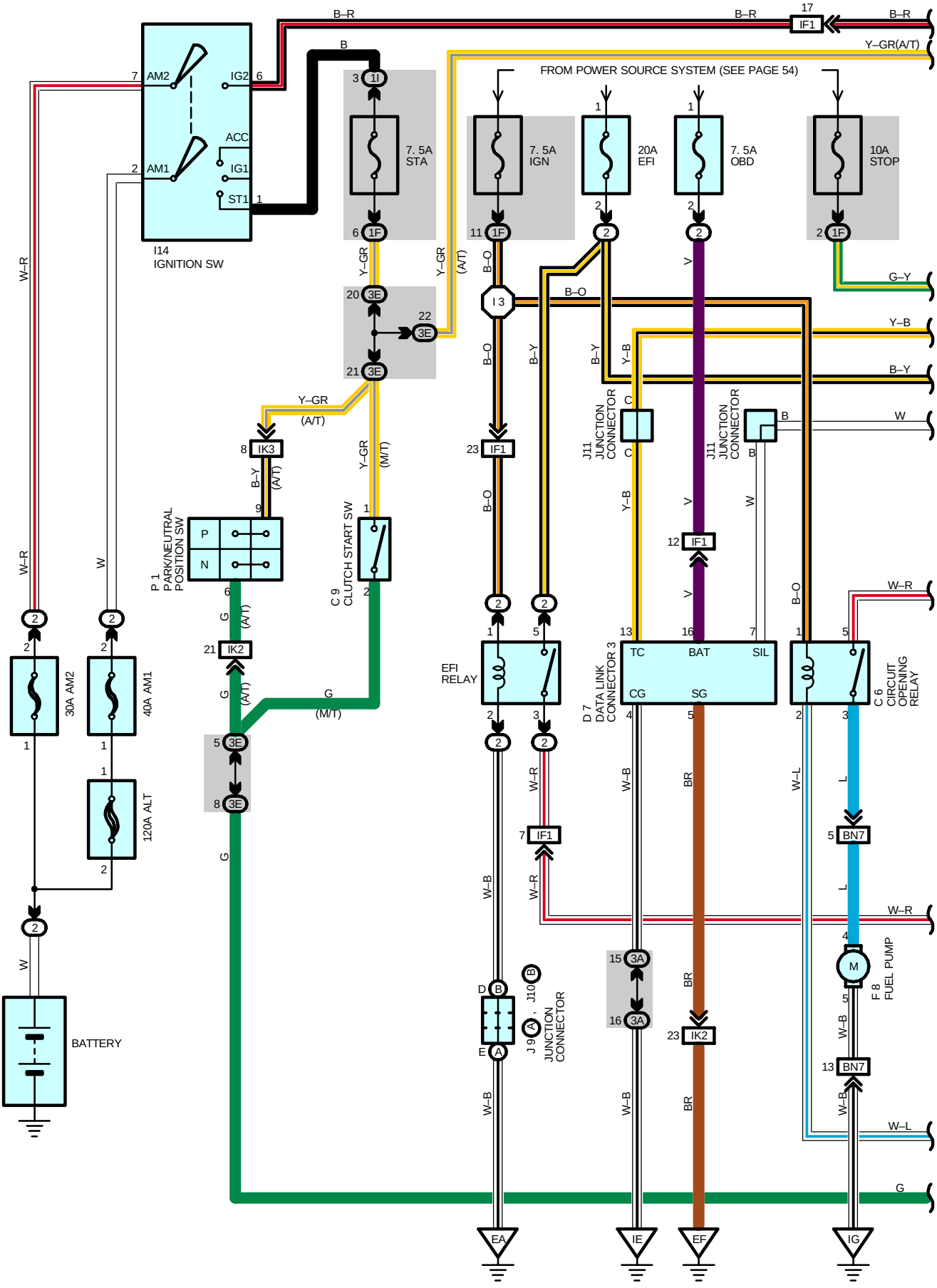
FROM POWER SOURCE SYSTEM (SEE PAGE 54)
I14
IGNITION SW
7. 5A
STA
7. 5A
IGN
20A
EFI
7. 5A
OBD
10A
STOP
EFI
RELAY
P 1
PARK/NEUTRAL
POSITION SW
C 9
CLUTCH START SW
D 7
DATA LINK
CONNECTOR 3
C 6
CIRCUIT
OPENING
RELAY
F 8
FUEL PUMP
J11
JUNCTION
CONNECTOR
J 9 , J10
JUNCTION
CONNECTOR
30A AM2
40A AM1
120A ALT
BATTERY
TC
BAT
SIL
CG
SG
EA
IE
EF
IG

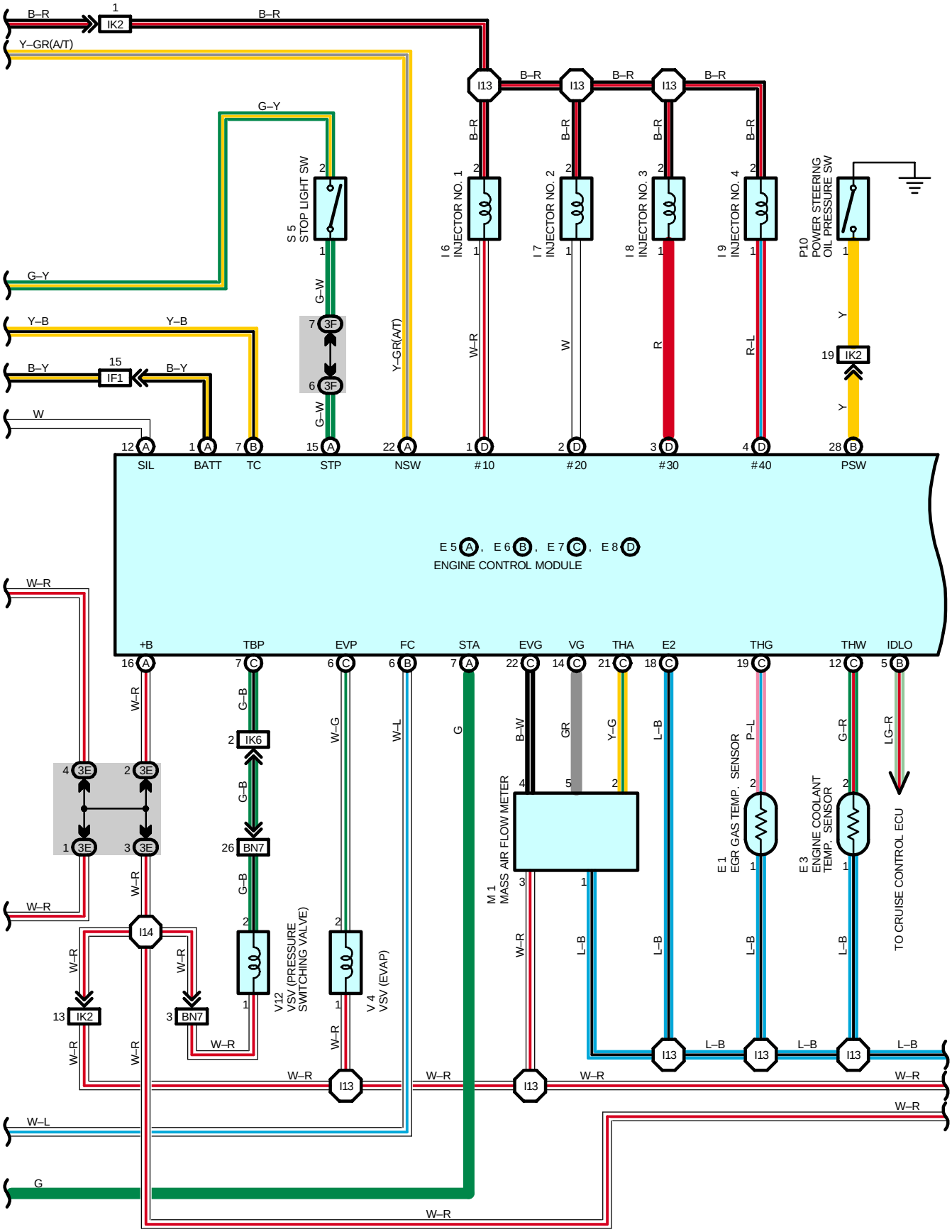
B–R
IK2
Y–GR(A/T)
G–Y
S 5
STOP LIGHT SW
G–W
3F
Y–GR(A/T)
I13
I 6
INJECTOR NO. 1
I 7
INJECTOR NO. 2
I 8
INJECTOR NO. 3
I 9
INJECTOR NO. 4
W–R
W
R
R–L
P10
POWER STEERING
OIL PRESSURE SW
Y
Y–B
B–Y
IF1
15
W
SIL
BATT
TC
STP
NSW
#10
#20
#30
#40
PSW
E 5 A , E 6 B , E 7 C , E 8 D
ENGINE CONTROL MODULE
+B
TBP
EVP
FC
STA
EVG
VG
THA
E2
THG
THW
IDLO
3E
IK6
BN7
I14
G–B
W–G
W–L
G
B–W
GR
Y–G
L–B
P–L
G–R
LG–R
V12
VSV (PRESSURE
SWITCHING VALVE)
V 4
VSV (EVAP)
M 1
MASS AIR FLOW METER
E 1
EGR GAS TEMP. SENSOR
E 3
ENGINE COOLANT
TEMP. SENSOR
TO CRUISE CONTROL ECU
W–L
G

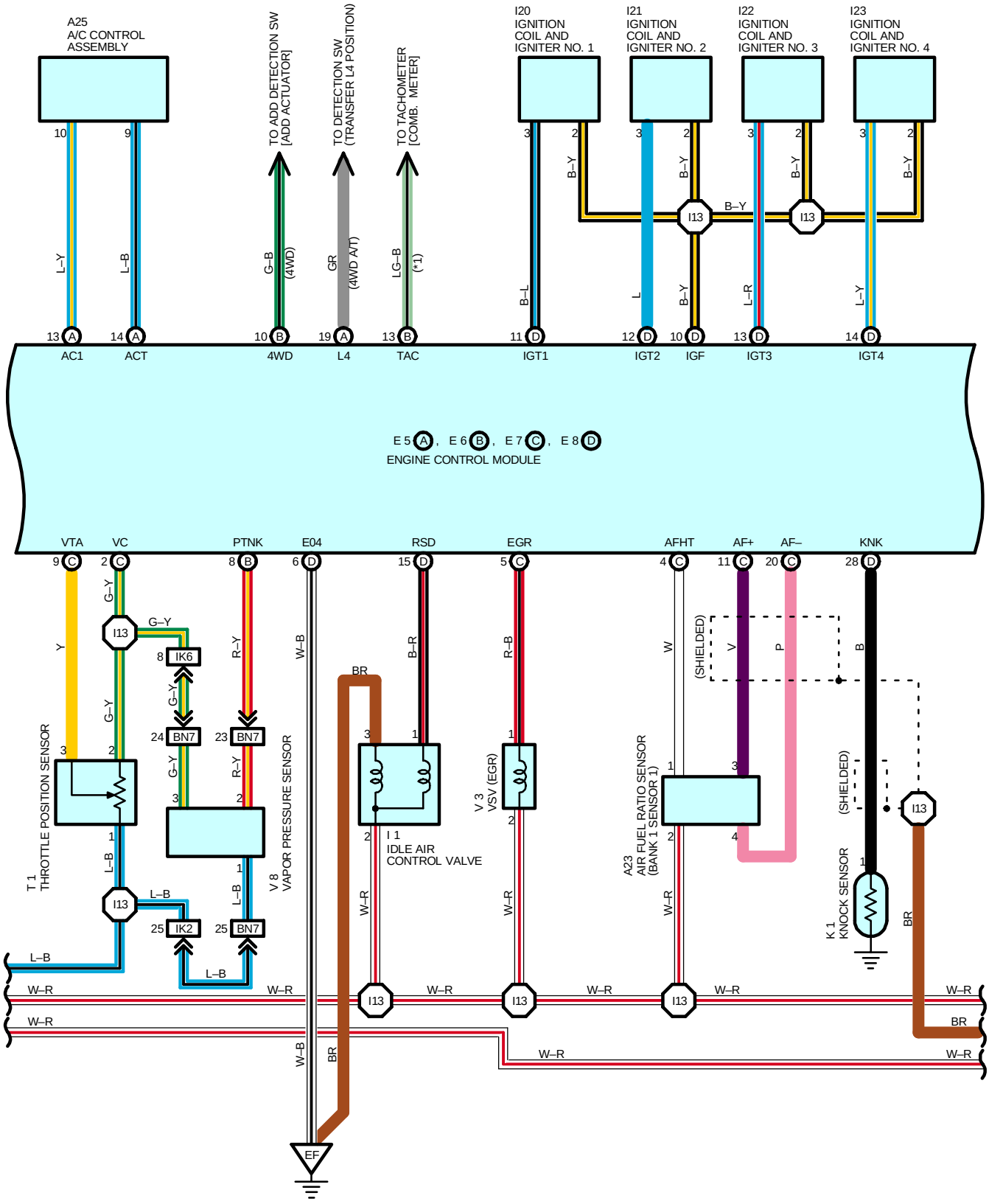
A25
A/C CONTROL
ASSEMBLY
TO ADD DETECTION SW
[ADD ACTUATOR]
TO DETECTION SW
(TRANSFER L4 POSITION)
TO TACHOMETER
[COMB. METER]
I20
IGNITION
COIL AND
IGNITER NO. 1
I21
IGNITION
COIL AND
IGNITER NO. 2
I22
IGNITION
COIL AND
IGNITER NO. 3
I23
IGNITION
COIL AND
IGNITER NO. 4
AC1
ACT
4WD
L4
TAC
IGT1
IGT2
IGF
IGT3
IGT4
E5 A , E6 B , E7 C , E8 D
ENGINE CONTROL MODULE
VTA
VC
PTNK
E04
RSD
EGR
AFHT
AF+
AF–
KNK
T1
THROTTLE POSITION SENSOR
V8
VAPOR PRESSURE SENSOR
I1
IDLE AIR
CONTROL VALVE
V3
VSV (EGR)
A23
AIR FUEL RATIO SENSOR
(BANK 1 SENSOR 1)
K1
KNOCK SENSOR
(SHIELDED)
EF

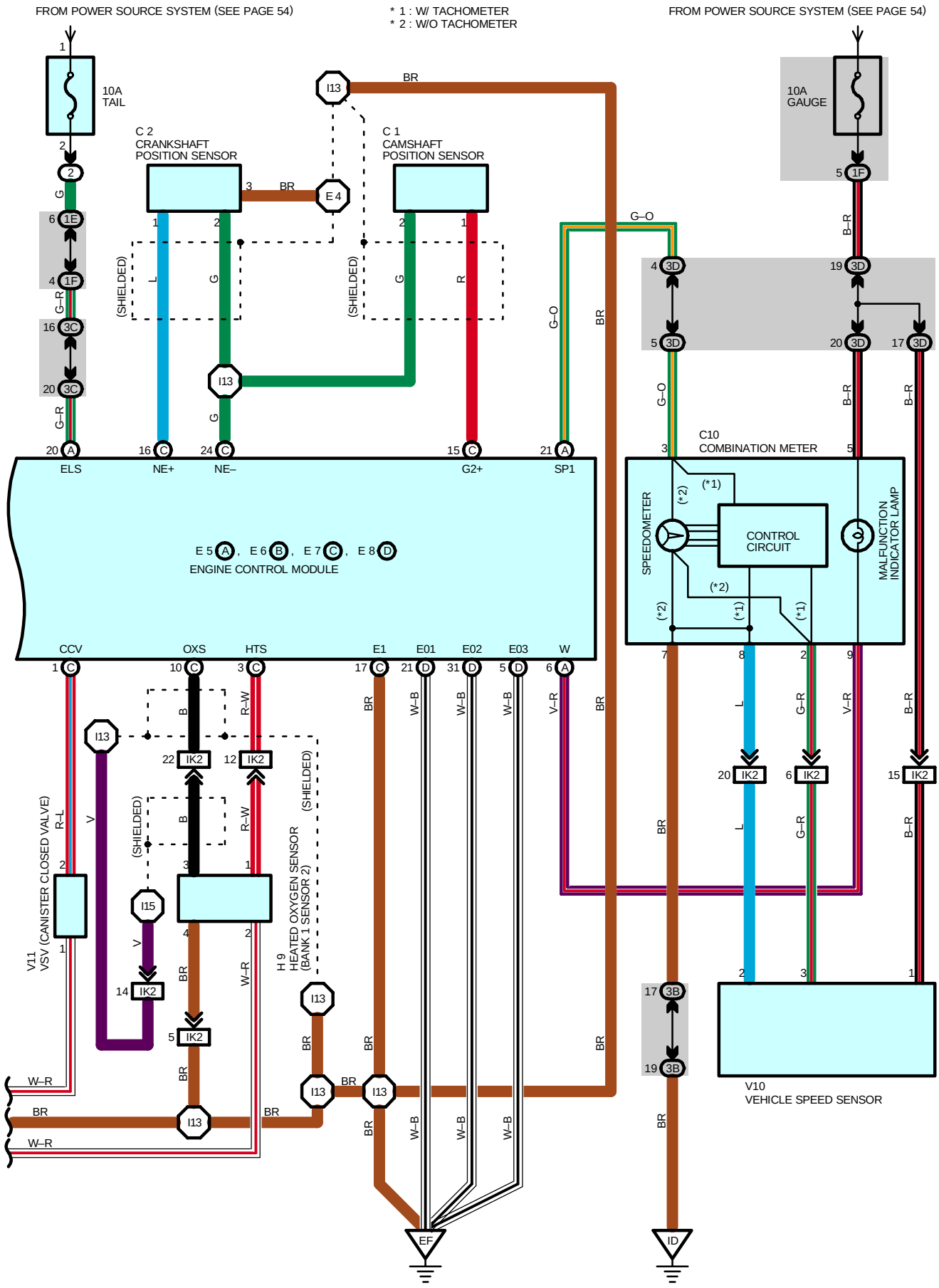
FROM POWER SOURCE SYSTEM (SEE PAGE 54)
* 1 : W/ TACHOMETER
* 2 : W/O TACHOMETER
FROM POWER SOURCE SYSTEM (SEE PAGE 54)
10A TAIL
10A GAUGE
C 2 CRANKSHAFT POSITION SENSOR
C 1 CAMSHAFT POSITION SENSOR
(SHIELDED)
C10 COMBINATION METER
SPEEDOMETER
CONTROL CIRCUIT
MALFUNCTION INDICATOR LAMP
E5 A , E6 B , E7 C , E8 D
ENGINE CONTROL MODULE
ELS
NE+
NE–
G2+
SP1
CCV
OXS
HTS
E1
E01
E02
E03
W
V11 VSV (CANISTER CLOSED VALVE)
H9 HEATED OXYGEN SENSOR (BANK 1 SENSOR 2)
V10 VEHICLE SPEED SENSOR
EF
ID

SYSTEM OUTLINE

The engine control system utilizes a microcomputer and maintains overall control of the engine, transmission, etc. An outline of engine control is given here.

1. INPUT SIGNAL

(1) Engine coolant temp. signal system

The engine coolant temp. sensor detects the engine coolant temp. and has a built–in thermistor with a resistance which varies according to the water temp. Thus the engine coolant temp. is input in the form of a control signal to TERMINAL THW of the engine control module.

(2) Intake air temp. signal system

The intake air temp. sensor is installed inside the mass air flow meter and detects the intake air temp., which is input as a control signal to TERMINAL THA of the engine control module.

(3) Heated oxygen sensor signal system

The oxygen density in exhaust emissions is detected and input as a control signal to TERMINAL OXS of the engine control module. To maintain stable detection performance by the heated oxygen sensor, a heater is used for warming the sensor. The heater is also controlled by the engine control module (HTS).

(4) RPM signal system

Camshaft position and crankshaft position are detected by the camshaft position sensor and crankshaft position sensor, camshaft position is input as a control signal to TERMINAL G2+ of the engine control module, and engine RPM is input to TERMINAL NE+.

(5) Throttle signal system

The throttle position sensor detects the throttle valve opening angle, which is input as a control signal to TERMINAL VTA of the engine control module.

(6) Vehicle speed signal system

The vehicle speed sensor detects the vehicle speed and inputs a control signal to TERMINAL SP1 of the engine control module via the combination meter.

(7) A/C SW signal system

The operating voltage of the A/C magnetic clutch is detected and input in the form of a control signal to TERMINAL AC1 of the engine control module.

(8) Battery signal system

Voltage is constantly applied to TERMINAL BATT of the engine control module. When the ignition SW is turned to on, voltage for engine control module operation is applied via the EFI relay to TERMINAL +B of the engine control module.

(9) Intake air volume signal system

Intake air volume is detected by the mass air flow meter and a signal is input into TERMINAL VG of the engine control module as a control signal.

(10) Stop light SW signal system

The stop light SW is used to detect whether or not the vehicle is braking and the information is input as a control signal to TERMINAL STP of the engine control module.

(11) Starter signal system

To confirm that the engine is cranking, the voltage applied to the starter motor during cranking is detected and is input as a control signal to TERMINAL STA of the engine control module.

(12) Engine knock signal system

Engine knocking is detected by the knock sensor and input as a control signal to TERMINAL KNK of the engine control module.

(13) 4WD signal system

Whether or not the vehicle is operating in 4WD mode is determined, and a control signal is input to TERMINAL 4WD of the engine control module.

(14) Air fuel ratio signal system

The air fuel ratio is detected and input as a control signal into TERMINAL AF+ of the engine control module.

2. CONTROL SYSTEM

* SFI system
  The SFI system monitors the engine conditions through the signals (Input signals (1 to 13)) input from each sensor to the engine control module. Based on this data and the program memorized in the engine control module, the most appropriate fuel injection timing is decided and current is output to TERMINALS #10, #20, #30 and #40 of the engine control module, causing the injectors to operate (to inject fuel). It is this system which, through the work of the engine control module, finely controls fuel injection in response to driving conditions.
* Electronic spark advance system
  The ESA system monitors the engine conditions using the signals (input signals (1, 4, 5 to 7, 9, 11, 12)) input to the engine control module from each sensor. Based on this data and the program memorized in the engine control module, the most appropriate ignition timing is decided and current is output to TERMINALS IGT1, IGT2, IGT3 and IGT4 of the engine control module. This output controls the igniter to produce the most appropriate ignition timing for the driving conditions.
* Heated oxygen sensor heater control system
  The heated oxygen sensor heater control system turns the heater to on when the intake air volume is low (Temp. of exhaust emissions low), and warms up the heated oxygen sensor to improve detection performance of the sensor. The engine control module evaluates the signals (Input signals (1, 4, 8, 9, 11)) from each sensor, current is output to TERMINAL HT1B and controls the heater.

3. DIAGNOSIS SYSTEM

With the diagnosis system, when there is a malfunction in the ECU signal system, the malfunctioning system is recorded in the memory. The malfunctioning system can then be found by reading the display (Code) of the malfunction indicator lamp.

4. FAIL–SAFE SYSTEM

When a malfunction occurs in any system, if there is a possibility of engine trouble being caused by continued control based on the signals from that system, the fail–safe system either controls the system by using data (Standard values) recorded in the engine control module memory or else stops the engine.

SERVICE HINTS

EFI RELAY

5–3 : Closed with ignition SW at **ON** or **ST** position

C6 CIRCUIT OPENING RELAY

5–3 : Closed with starter running or ignition SW at **ON** or **ST** position

I6, I7, I8, I9 INJECTOR

1–2 : **13.4**–**14.2** Ω

T1 THROTTLE POSITION SENSOR

2–1 : **4**–**9** kΩ

E3 ENGINE COOLANT TEMP. SENSOR

1–2 : **10**–**20** kΩ (**–20**˚C, **–4**˚F)
4–**7** kΩ (**0**˚C, **32**˚F)
2–**3** kΩ (**20**˚C, **68**˚F)
0.9–**1.3** kΩ (**40**˚C, **104**˚F)
0.4–**0.7** kΩ (**60**˚C, **140**˚F)
0.2–**0.4** kΩ (**80**˚C, **176**˚F)

E5 (A), E6 (B), E7 (C), E8 (D) ENGINE CONTROL MODULE

Voltage at engine control module wiring connectors
+B–E1 : **9**–**14** volts (Ignition SW on)
BATT–E1 : **9**–**14** volts (Always)
VC–E2 : **4.5**–**5.5** volts (Ignition SW on)
VTA–E2 : **0.3**–**0.8** volts (Ignition SW on and throttle valve fully closed)
3.2–**4.9** volts (Ignition SW on and throttle valve fully open)
STA–E1 : **6** volts or more (Ignition SW at **ST** position)
W–E1 : **9**–**14** volts (No trouble and engine running)
THA–E2 : **0.5**–**3.4** volts (Ignition SW on and intake air temp. **20**˚C, **68**˚F)
THW–E2 : **0.2**–**1.0** volts (Ignition SW on and coolant temp. **80**˚C, **176**˚F)
SP1–E1 : Pulse generation with vehicle moving
STP–E1 : **7.5**–**14** Volts (Stop light SW on)

RESISTANCE AT ECU WIRING CONNECTOR

(Disconnect wiring connector)
VTA–E2 : **3.3**–**10** kΩ (Throttle valve fully open)
0.2–**0.8** kΩ (Throttle valve fully closed)
THA–E2 : **2**–**3** kΩ (Intake air temp. **20**˚C, **68**˚F)
THW–E2 : **0.2**–**0.4** kΩ (Coolant temp. **80**˚C, **178**˚F)
+B–E1 : **0.2**–**0.4** kΩ
NE+–E1 : **140**–**180** Ω

○ : PARTS LOCATION

Code	See Page	Code	See Page	Code	See Page
A23	32 (3RZ–FE)	F8	37 (Except Double Cab)	K1	33 (3RZ–FE)
A25	34	H9	35	M1	33 (3RZ–FE)
C1	32 (3RZ–FE)	I1	33 (3RZ–FE)	P1	33 (3RZ–FE)
C2	32 (3RZ–FE)	I6	33 (3RZ–FE)	P10	33 (3RZ–FE)
C6	34	I7	33 (3RZ–FE)	S5	35
C9	34	I8	33 (3RZ–FE)	T1	33 (3RZ–FE)
C10	34	I9	33 (3RZ–FE)	V3	33 (3RZ–FE)
D7	34	I14	35	V4	33 (3RZ–FE)
E1	32 (3RZ–FE)	I20	33 (3RZ–FE)	V8	36 (Double Cab)
E3	32 (3RZ–FE)	I21	33 (3RZ–FE)		37 (Except Double Cab)
E5 A	35	I22	33 (3RZ–FE)	V10	33 (3RZ–FE)
E6 B	35	I23	33 (3RZ–FE)	V11	33 (3RZ–FE)
E7 C	35	J9 A	33 (3RZ–FE)	V12	36 (Double Cab)
E8 D	35	J10 B	33 (3RZ–FE)		37 (Except Double Cab)
F8	36 (Double Cab)	J11	35		

: RELAY BLOCKS

Code	See Page	Relay Blocks (Relay Block Location)
2	21	R/B No.2 (Engine Compartment Left)

: JUNCTION BLOCK AND WIRE HARNESS CONNECTOR

Code	See Page	Junction Block and Wire Harness (Connector Location)
1E	23	Engine Room Main Wire and J/B No.1 (Lower Finish Panel)
1F	23	Cowl Wire and J/B No.1 (Lower Finish Panel)
1I	23	Engine Room Main Wire and J/B No.1 (Lower Finish Panel)
3A	24	Cowl Wire and J/B No.3 (Behind the Instrument Panel Left)
3B		
3C		
3D		
3E		
3F		

: CONNECTOR JOINING WIRE HARNESS AND WIRE HARNESS

Code	See Page	Joining Wire Harness and Wire Harness (Connector Location)
IF1	44	Engine Room Main Wire and Cowl Wire (Left Kick Panel)
IK2	44	Engine Wire and Cowl Wire (Above the Glove Box)
IK3		
IK6		
BN7	46 (Double Cab) 48 (Except Double Cab)	Frame Wire and Cowl Wire (Under the Driver's Seat)

: GROUND POINTS

Code	See Page	Ground Points Location
EA	42 (3RZ–FE)	Front Left Fender
EF	42 (3RZ–FE)	Ignition Coil Braket
ID	44	Left Kick Panel
IE	44	Around the Right Edge of the Reinforcement
IG	44	Around the Left Edge of the Reinforcement

: SPLICE POINTS

Code	See Page	Wire Harness with Splice Points	Code	See Page	Wire Harness with Splice Points
E4	42 (3RZ–FE)	Engine Wire	I14	44	Cowl Wire
I3	44	Cowl Wire	I15		
I13	44	Engine Wire			

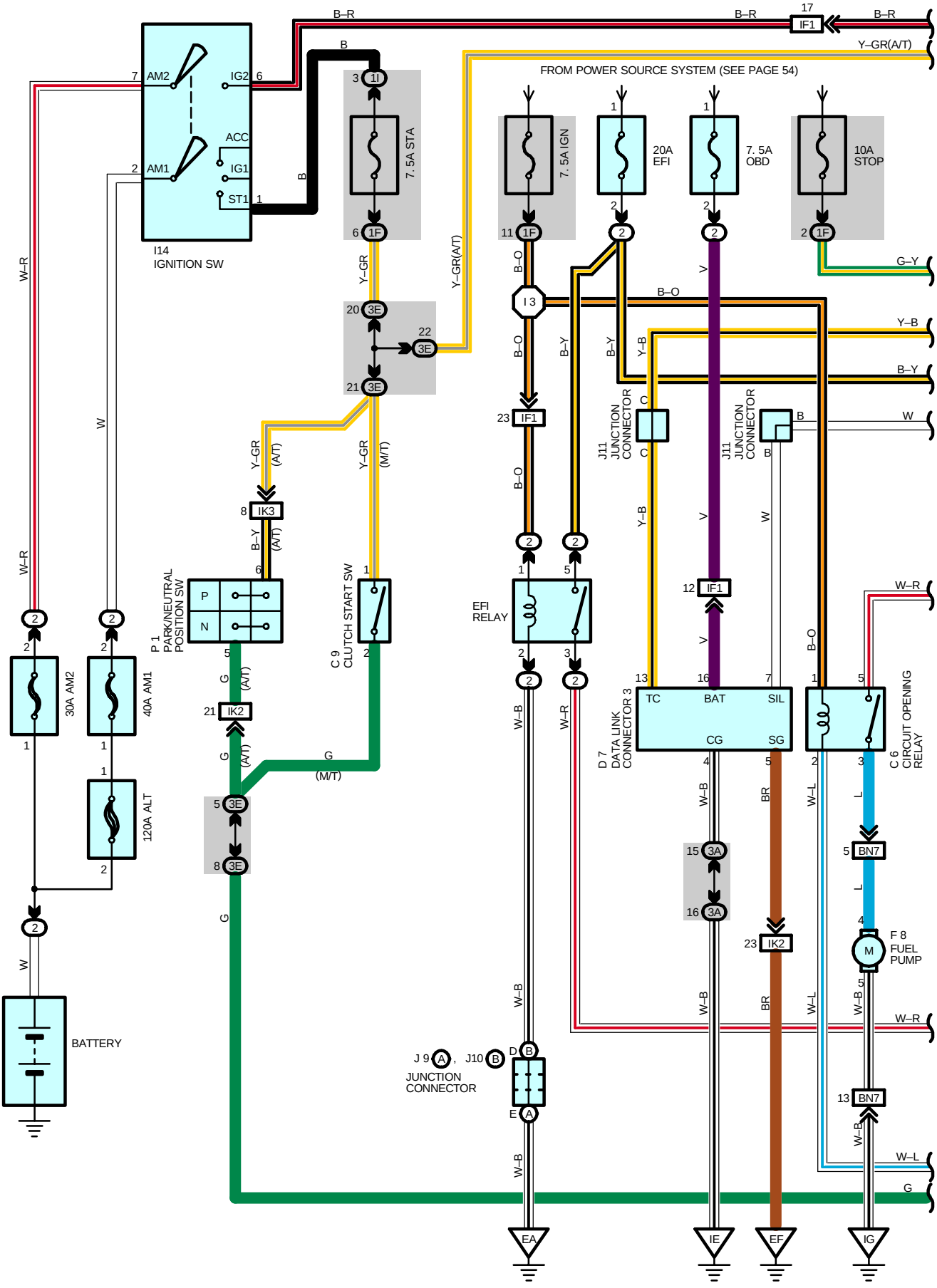
FROM POWER SOURCE SYSTEM (SEE PAGE 54)
I14
IGNITION SW
AM2
AM1
IG2
ACC
IG1
ST1
7.5A STA
7.5A IGN
20A EFI
7.5A OBD
10A STOP
EFI RELAY
P 1
PARK/NEUTRAL POSITION SW
C 9
CLUTCH START SW
J11 JUNCTION CONNECTOR
D 7
DATA LINK CONNECTOR 3
C 6
CIRCUIT OPENING RELAY
30A AM2
40A AM1
120A ALT
BATTERY
F 8
FUEL PUMP
J 9 , J10
JUNCTION CONNECTOR
TC
BAT
SIL
CG
SG
EA
IE
EF
IG

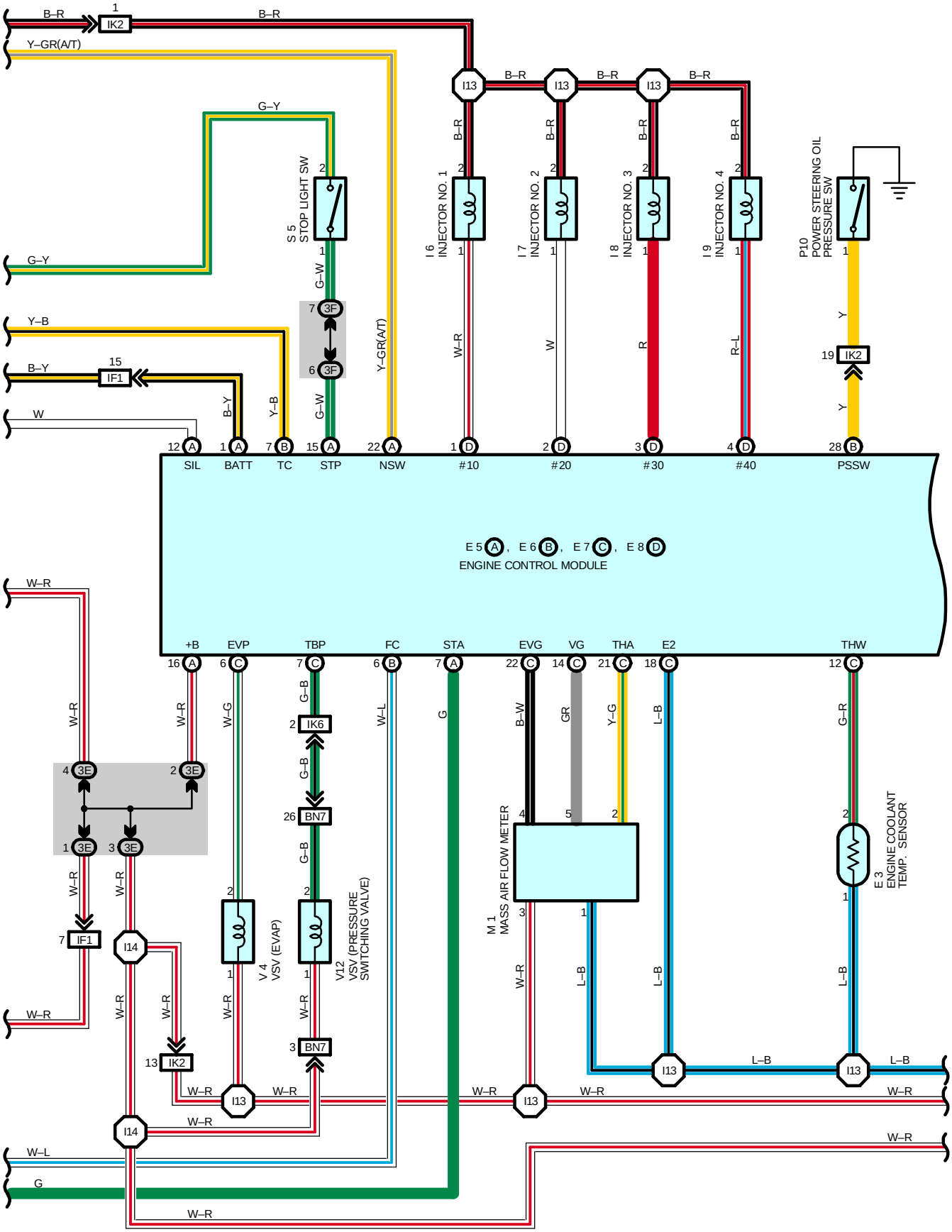
B–R
IK2
Y–GR(A/T)
G–Y
S 5
STOP LIGHT SW
G–W
3F
Y–B
B–Y
IF1
W
I13
I 6
INJECTOR NO. 1
I 7
INJECTOR NO. 2
I 8
INJECTOR NO. 3
I 9
INJECTOR NO. 4
W–R
W
R
R–L
P10
POWER STEERING OIL
PRESSURE SW
Y
SIL
BATT
TC
STP
NSW
#10
#20
#30
#40
PSSW
E 5 A , E 6 B , E 7 C , E 8 D
ENGINE CONTROL MODULE
+B
EVP
TBP
FC
STA
EVG
VG
THA
E2
THW
W–L
G
B–W
GR
Y–G
L–B
G–R
IK6
BN7
3E
IF1
I14
IK2
V 4
VSV (EVAP)
V12
VSV (PRESSURE
SWITCHING VALVE)
M 1
MASS AIR FLOW METER
E 3
ENGINE COOLANT
TEMP. SENSOR

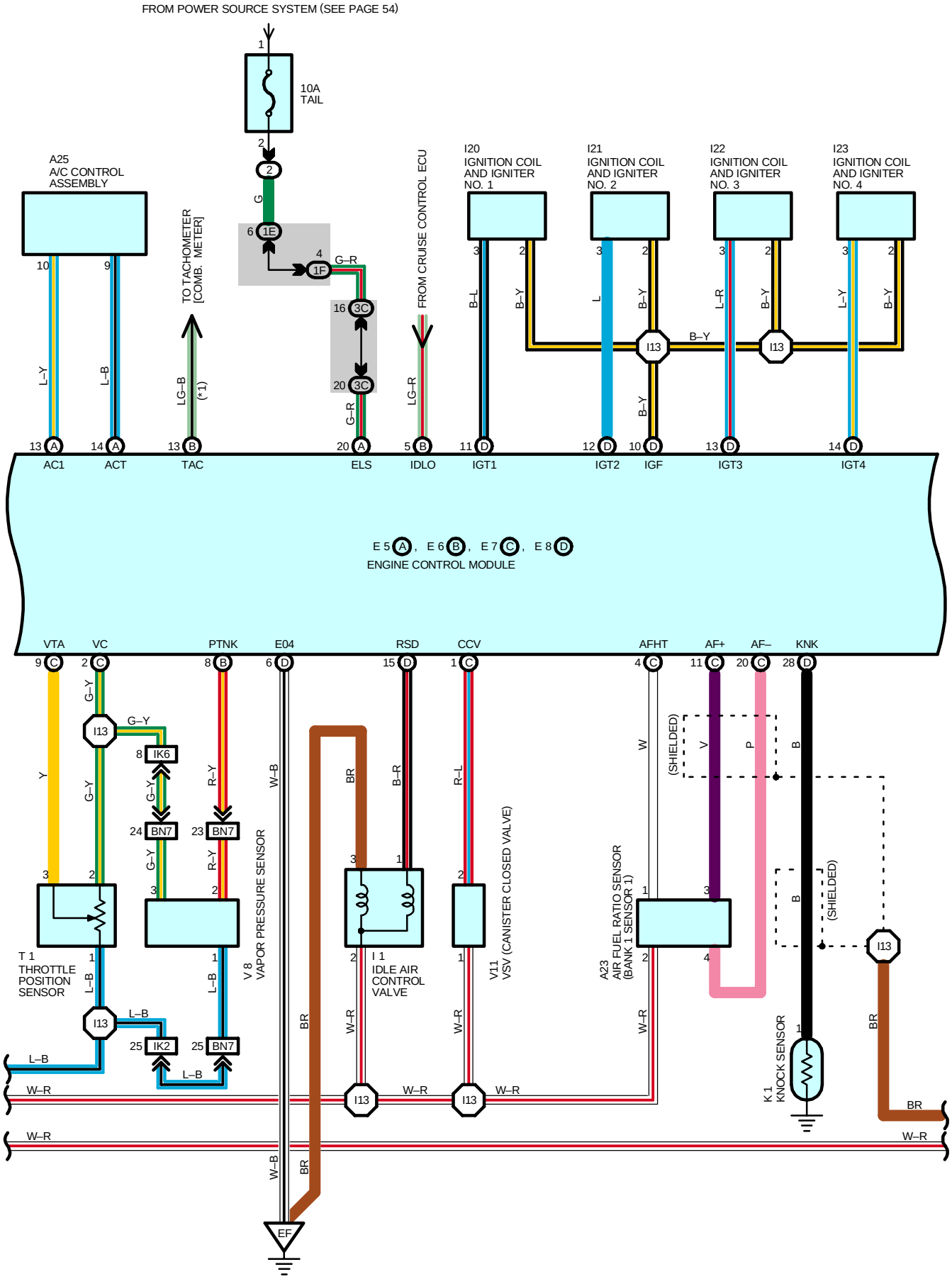
FROM POWER SOURCE SYSTEM (SEE PAGE 54)
10A TAIL
A25 A/C CONTROL ASSEMBLY
TO TACHOMETER [COMB. METER]
FROM CRUISE CONTROL ECU
I20 IGNITION COIL AND IGNITER NO. 1
I21 IGNITION COIL AND IGNITER NO. 2
I22 IGNITION COIL AND IGNITER NO. 3
I23 IGNITION COIL AND IGNITER NO. 4
AC1
ACT
TAC
ELS
IDLO
IGT1
IGT2
IGF
IGT3
IGT4
E5 A, E6 B, E7 C, E8 D
ENGINE CONTROL MODULE
VTA
VC
PTNK
E04
RSD
CCV
AFHT
AF+
AF–
KNK
T1 THROTTLE POSITION SENSOR
V8 VAPOR PRESSURE SENSOR
I1 IDLE AIR CONTROL VALVE
V11 VSV (CANISTER CLOSED VALVE)
A23 AIR FUEL RATIO SENSOR (BANK 1 SENSOR 1)
K1 KNOCK SENSOR
(SHIELDED)
EF

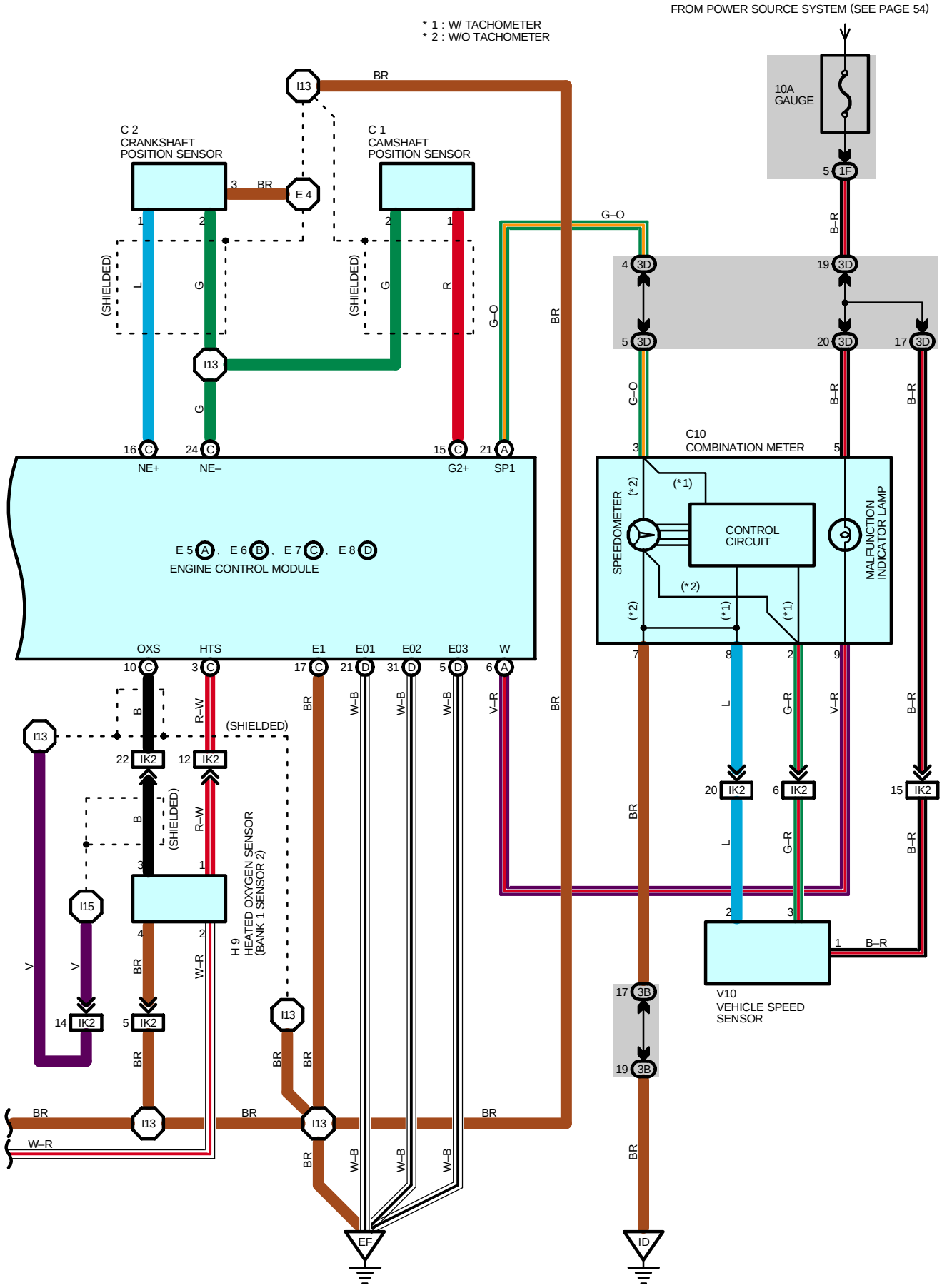
FROM POWER SOURCE SYSTEM (SEE PAGE 54)
* 1 : W/ TACHOMETER
* 2 : W/O TACHOMETER
10A GAUGE
C 2 CRANKSHAFT POSITION SENSOR
C 1 CAMSHAFT POSITION SENSOR
(SHIELDED)
C10 COMBINATION METER
SPEEDOMETER
CONTROL CIRCUIT
MALFUNCTION INDICATOR LAMP
E 5 A , E 6 B , E 7 C , E 8 D
ENGINE CONTROL MODULE
NE+
NE–
G2+
SP1
OXS
HTS
E1
E01
E02
E03
W
H 9
HEATED OXYGEN SENSOR (BANK 1 SENSOR 2)
V10
VEHICLE SPEED SENSOR
EF
ID

SYSTEM OUTLINE

The engine control system utilizes a microcomputer and maintains overall control of the engine, transmission, etc. An outline of engine control is given here.

1. INPUT SIGNAL

(1) Engine coolant temp. signal system

The engine coolant temp. sensor detects the engine coolant temp. and has a built–in thermistor with a resistance which varies according to the water temp. Thus the engine coolant temp. is input in the form of a control signal to TERMINAL THW of the engine control module.

(2) Intake air temp. signal system

The intake air temp. sensor is installed inside the mass air flow meter and detects the intake air temp., which is input as a control signal to TERMINAL THA of the engine control module.

(3) Heated oxygen sensor signal system

The oxygen density in the exhaust emissions is detected and input as a control signal to TERMINAL OXS of the engine control module. To maintain stable detection performance by the heated oxygen sensor, a heater is used for warming the sensor. The heater is also controlled by the engine control module (HTS).

(4) RPM signal system

Camshaft position and crankshaft position are detected by the camshaft position sensor and crankshaft position sensor, camshaft position is input as a control signal to TERMINAL G2+ of the engine control module, and engine RPM is input to TERMINAL NE–.

(5) Throttle signal system

The throttle position sensor detects the throttle valve opening angle, which is input as a control signal to TERMINAL VTA of the engine control module.

(6) Vehicle speed signal system

The vehicle speed sensor detects the vehicle speed and inputs a control signal to TERMINAL SP1 of the engine control module via the combination meter.

(7) A/C SW signal system

The operating voltage of the A/C magnetic clutch is detected and input in the form of a control signal to TERMINAL AC1 of the engine control module.

(8) Battery signal system

Voltage is constantly applied to TERMINAL BATT of the engine control module. When the ignition SW is turned to on, voltage for engine control module operation is applied via the EFI relay to TERMINAL +B of the engine control module.

(9) Intake air volume signal system

Intake air volume is detected by the mass air flow meter and a signal is input into TERMINAL VG of the engine control module as a control signal.

(10) Stop light SW signal system

The stop light SW is used to detect whether or not the vehicle is braking and the information is input as a control signal to TERMINAL STP of the engine control module.

(11) Starter signal system

To confirm that the engine is cranking, the voltage applied to the starter motor during cranking is detected and is input as a control signal to TERMINAL STA of the engine control module.

(12) Engine knock signal system

Engine knocking is detected by the knock sensor and input as a control signal to TERMINAL KNK of the engine control module.

(13) Air fuel ratio signal system

The air fuel ratio is detected and input as a control signal into TERMINAL AF+ of the engine control module.

2. CONTROL SYSTEM

* SFI system
  The SFI system monitors the engine conditions through the signals (Input signals (1 to 12)) input from each sensor to the engine control module. Based on this data and the program memorized in the engine control module, the most appropriate fuel injection timing is decided and current is output to TERMINALS #10, #20, #30 and #40 of the engine control module, causing the injectors to operate (to inject fuel). It is this system which, through the work of the engine control module, finely controls fuel injection in response to driving conditions.
* Electronic spark advance system
  The ESA system monitors the engine conditions using the signals (input signals (1, 4, 5 to 7, 9, 11, 12)) input to the engine control module from each sensor. Based on this data and the program memorized in the engine control module, the most appropriate ignition timing is decided and current is output to TERMINALS IGT1, IGT2, IGT3 and IGT4 of the engine control module. This output controls the igniter to produce the most appropriate ignition timing for the driving conditions.
* Heated oxygen sensor heater control system
  The heated oxygen sensor heater control system turns the heater to on when the intake air volume is low (Temp. of exhaust emissions low), and warms up the heated oxygen sensor to improve detection performance of the sensor. The engine control module evaluates the signals (Input signals (1, 4, 8, 9, 11)) from each sensor, current is output to TERMINAL HT1B and controls the heater.

3. DIAGNOSIS SYSTEM

With the diagnosis system, when there is a malfunction in the ECU signal system, the malfunctioning system is recorded in the memory. The malfunctioning system can then be found by reading the display (Code) of the malfunction indicator lamp.

4. FAIL–SAFE SYSTEM

When a malfunction occurs in any system, if there is a possibility of engine trouble being caused by continued control based on the signals from that system, the fail–safe system either controls the system by using data (Standard values) recorded in the engine control module memory or else stops the engine.

SERVICE HINTS

EFI RELAY

5–3 : Closed with ignition SW at **ON** or **ST** position

C6 CIRCUIT OPENING RELAY

5–3 : Closed with starter running or ignition SW at **ON** or **ST** position

I6, I7, I8, I9 INJECTOR

1–2 : **13.4**–**14.2** Ω

T1 THROTTLE POSITION SENSOR

2–1 : **4**–**9** kΩ

E3 ENGINE COOLANT TEMP. SENSOR

1–2 : **10**–**20** kΩ (**–20**˚C, **–4**˚F)
4–**7** kΩ (**0**˚C, **32**˚F)
2–**3** kΩ (**20**˚C, **68**˚F)
0.9–**1.3** kΩ (**40**˚C, **104**˚F)
0.4–**0.7** kΩ (**60**˚C, **140**˚F)
0.2–**0.4** kΩ (**80**˚C, **176**˚F)

E5 (A), E6 (B), E7 (C), E8 (D) ENGINE CONTROL MODULE

Voltage at engine control module wiring connectors
+B–E1 : **9**–**14** volts (Ignition SW on)
BATT–E1 : **9**–**14** volts (Always)
VC–E2 : **4.5**–**5.5** volts (Ignition SW on)
VTA–E2 **0.3**–**0.8** volts (Ignition SW on and throttle valve fully closed)
3.2–**4.9** volts (Ignition SW on and throttle valve fully open)
STA–E1 : **6** volts or more (Ignition SW at **ST** position)
W–E1 : **9**–**14** volts (No trouble and engine running)
THA–E2 : **0.5**–**3.4** volts (Ignition SW on and intake air temp. **20**˚C, **68**˚F)
THW–E2 : **0.2**–**1.0** volts (Ignition SW on and coolant temp. **80**˚C,**176**˚F)
SP1–E1 : Plus generation with vehicle moving
STP–E1 : **7.5**–**14** volts (Stop light SW on)
IGT1, IGT2–E1 : Plus generator (Cranking or idling)
#10, #20, #30, #40–E1 : **9**–**14** volts (Ignition SW on)

RESISTANCE AT ECU WIRING CONNECTOR

(Disconnect wiring connector)
VTA–E2 : **3.3**–**10** kΩ (Throttle valve fully open)
0.2–**0.8** kΩ (Throttle valve fully closed)
THA–E2 : **2**–**3** kΩ (Intake air temp. **20**˚C, **68**˚F)
THW–E2 : **0.2**–**0.4** kΩ (Coolant temp. **80**˚C, **178**˚F)
+B–E1 : **0.2**–**0.4** kΩ
NE+–E1 : **140**–**180** Ω

○ : PARTS LOCATION

Code	See Page	Code	See Page	Code	See Page
A23	32 (2RZ–FE)	F8	37 (Except Double Cab)	J10 B	33 (2RZ–FE)
A25	34	H9	35	J11	35
C1	32 (2RZ–FE)	I1	33 (2RZ–FE)	K1	33 (2RZ–FE)
C2	32 (2RZ–FE)	I6	33 (2RZ–FE)	M1	33 (2RZ–FE)
C6	34	I7	33 (2RZ–FE)	P1	33 (2RZ–FE)
C9	34	I8	33 (2RZ–FE)	P10	33 (2RZ–FE)
C10	34	I9	33 (2RZ–FE)	S5	35
D7	34	I14	35	T1	33 (2RZ–FE)
E3	32 (2RZ–FE)	I20	33 (2RZ–FE)	V4	33 (2RZ–FE)
E5 A	35	I21	33 (2RZ–FE)	V8	37 (Except Double Cab)
E6 B	35	I22	33 (2RZ–FE)	V10	33 (2RZ–FE)
E7 C	35	I23	33 (2RZ–FE)	V11	33 (2RZ–FE)
E8 D	35	J9 A	33 (2RZ–FE)	V12	37 (Except Double Cab)

: RELAY BLOCKS

Code	See Page	Relay Blocks (Relay Block Location)
2	21	R/B No.2 (Engine Compartment Left)

: JUNCTION BLOCK AND WIRE HARNESS CONNECTOR

Code	See Page	Junction Block and Wire Harness (Connector Location)
1E	23	Engine Room Main Wire and J/B No.1 (Lower Finish Panel)
1F	23	Cowl Wire and J/B No.1 (Lower Finish Panel)
1I	23	Engine Room Main Wire and J/B No.1 (Lower Finish Panel)
3A	24	Cowl Wire and J/B No.3 (Behind the Instrument Panel Left)
3B		
3C		
3D		
3E		
3F		

: CONNECTOR JOINING WIRE HARNESS AND WIRE HARNESS

Code	See Page	Joining Wire Harness and Wire Harness (Connector Location)
IF1	44	Engine Room Main Wire and Cowl Wire (Left Kick Panel)
IK2	44	Engine Wire and Cowl Wire (Above the Glove Box)
IK3		
IK6		
BN7	48 (Except Double Cab)	Frame Wire and Cowl Wire (Under the Driver's Seat)

: GROUND POINTS

Code	See Page	Ground Points Location
EA	42 (2RZ–FE)	Front Left Fender
EF	42 (2RZ–FE)	Ignition Coil Braket
ID	44	Left Kick Panel
IE	44	Around the Right Edge of the Reinforcement
IG	44	Around the Left Edge of the Reinforcement

: SPLICE POINTS

Code	See Page	Wire Harness with Splice Points	Code	See Page	Wire Harness with Splice Points
E4	42 (2RZ–FE)	Engine Wire	I14	44	Cowl Wire
I3	44	Cowl Wire	I15		
I13	44	Engine Wire			

HEADLIGHT (w/o DAYTIME RUNNING LIGHT)

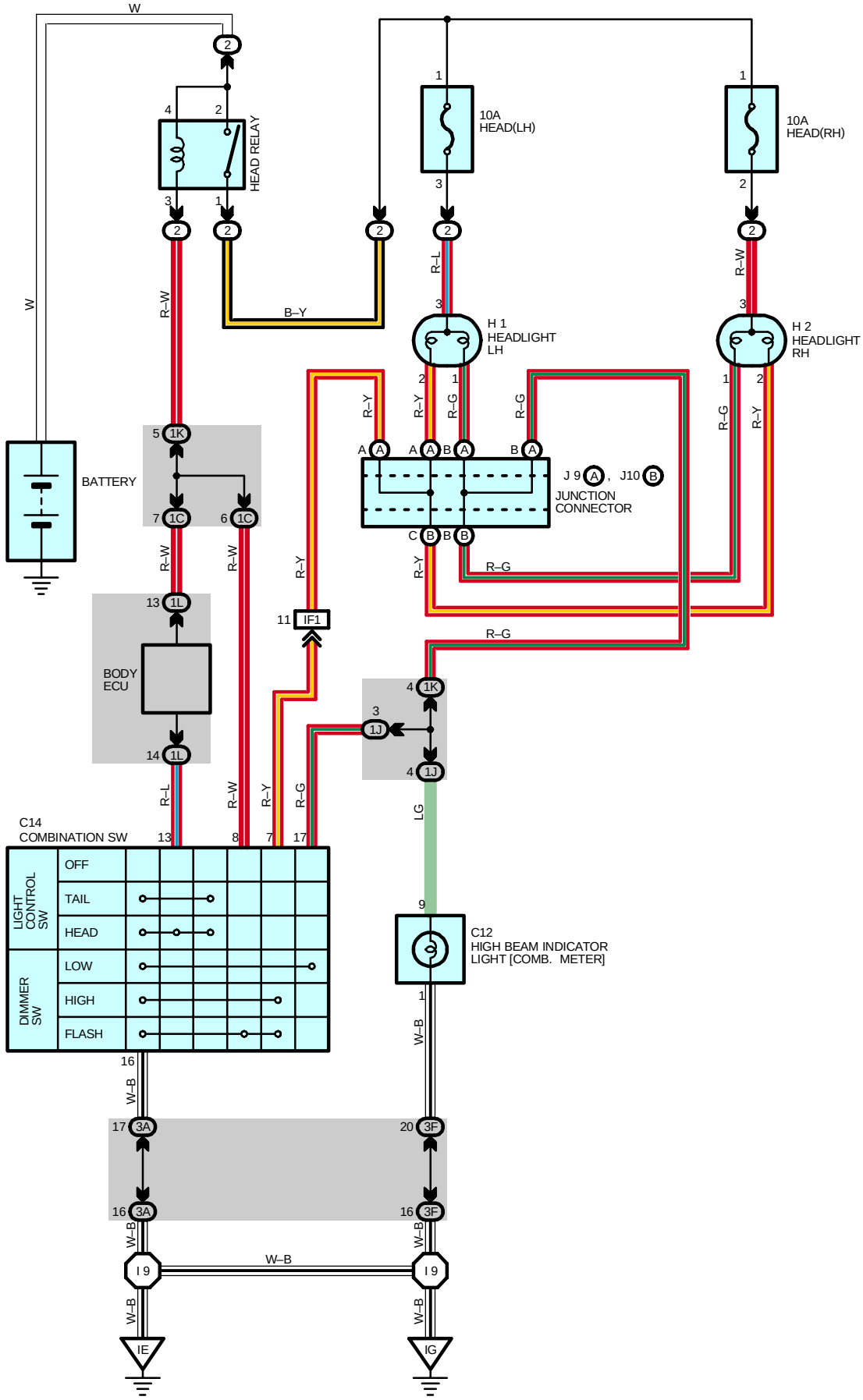

SERVICE HINTS

HEAD RELAY

2–1 : Closed with light control SW at **HEAD** position or dimmer SW at **FLASH** position

: PARTS LOCATION

Code	See Page	Code	See Page	Code	See Page
C12	34	H2	30 (5VZ–FE)	J10 B	31 (5VZ–FE)
C14	34		32 (3RZ–FE, 2RZ–FE)		33 (3RZ–FE, 2RZ–FE)
H1	30 (5VZ–FE)	J9 A	31 (5VZ–FE)		
	32 (3RZ–FE, 2RZ–FE)		33 (3RZ–FE, 2RZ–FE)		

: RELAY BLOCKS

Code	See Page	Relay Blocks (Relay Block Location)
2	21	R/B No.2 (Engine Compartment Left)

: JUNCTION BLOCK AND WIRE HARNESS CONNECTOR

Code	See Page	Junction Block and Wire Harness (Connector Location)
1C	23	Cowl Wire and J/B No.1 (Lower Finish Panel)
1J		
1K	23	Engine Room Main Wire and J/B No.1 (Lower Finish Panel)
1L	22	Cowl Wire and J/B No.1 (Lower Finish Panel)
3A	24	Cowl Wire and J/B No.3 (Behind the Instrument Panel Left)
3F		

: CONNECTOR JOINING WIRE HARNESS AND WIRE HARNESS

Code	See Page	Joining Wire Harness and Wire Harness (Connector Location)
IF1	44	Engine Room Main Wire and Cowl Wire (Left Kick Panel)

: GROUND POINTS

Code	See Page	Ground Points Location
IE	44	Around the Right Edge of the Reinforcement
IG	44	Around the Left Edge of the Reinforcement

: SPLICE POINTS

Code	See Page	Wire Harness with Splice Points	Code	See Page	Wire Harness with Splice Points
I9	44	Cowl Wire			

HEADLIGHT (w/ DAYTIME RUNNING LIGHT)

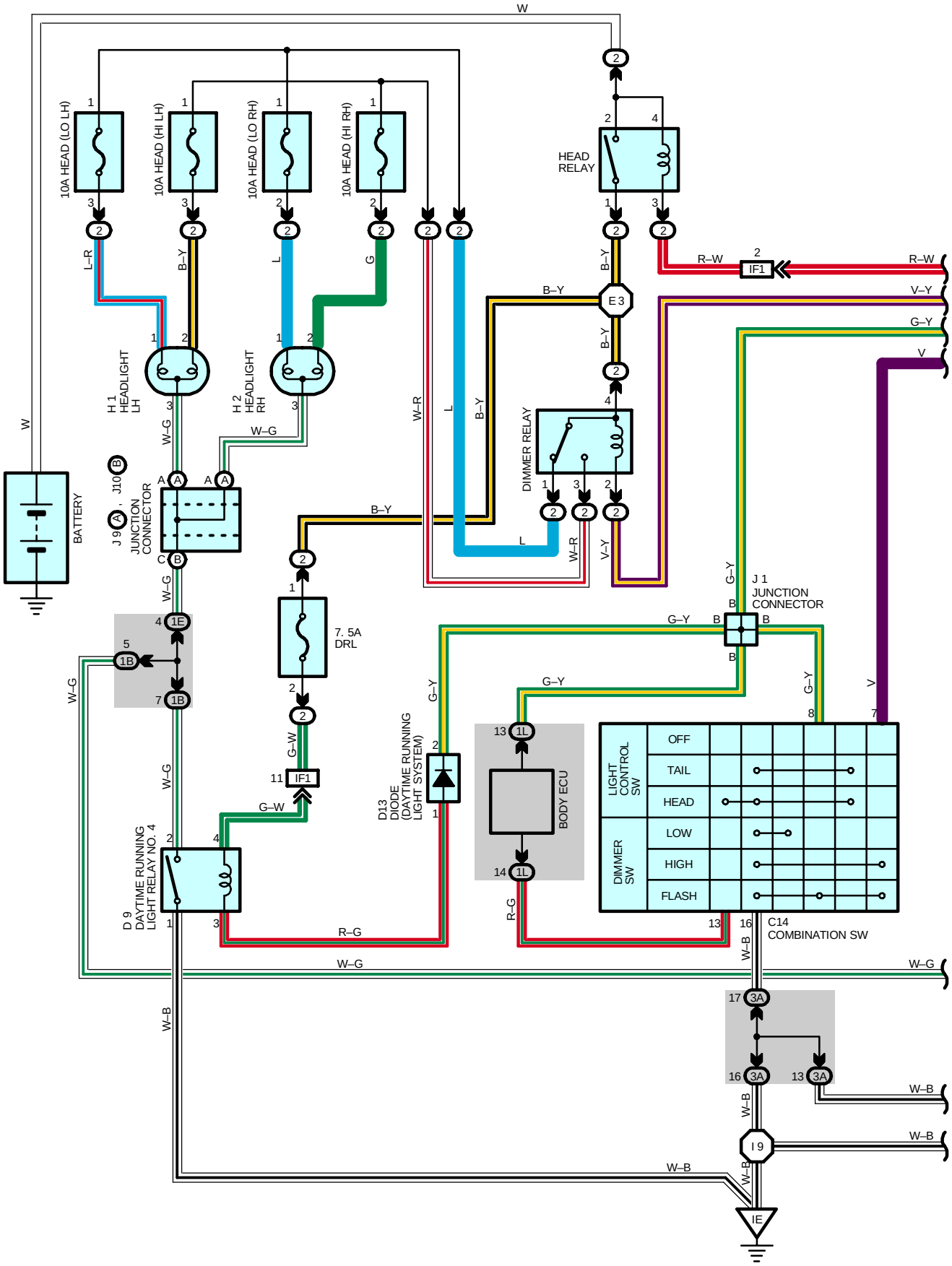

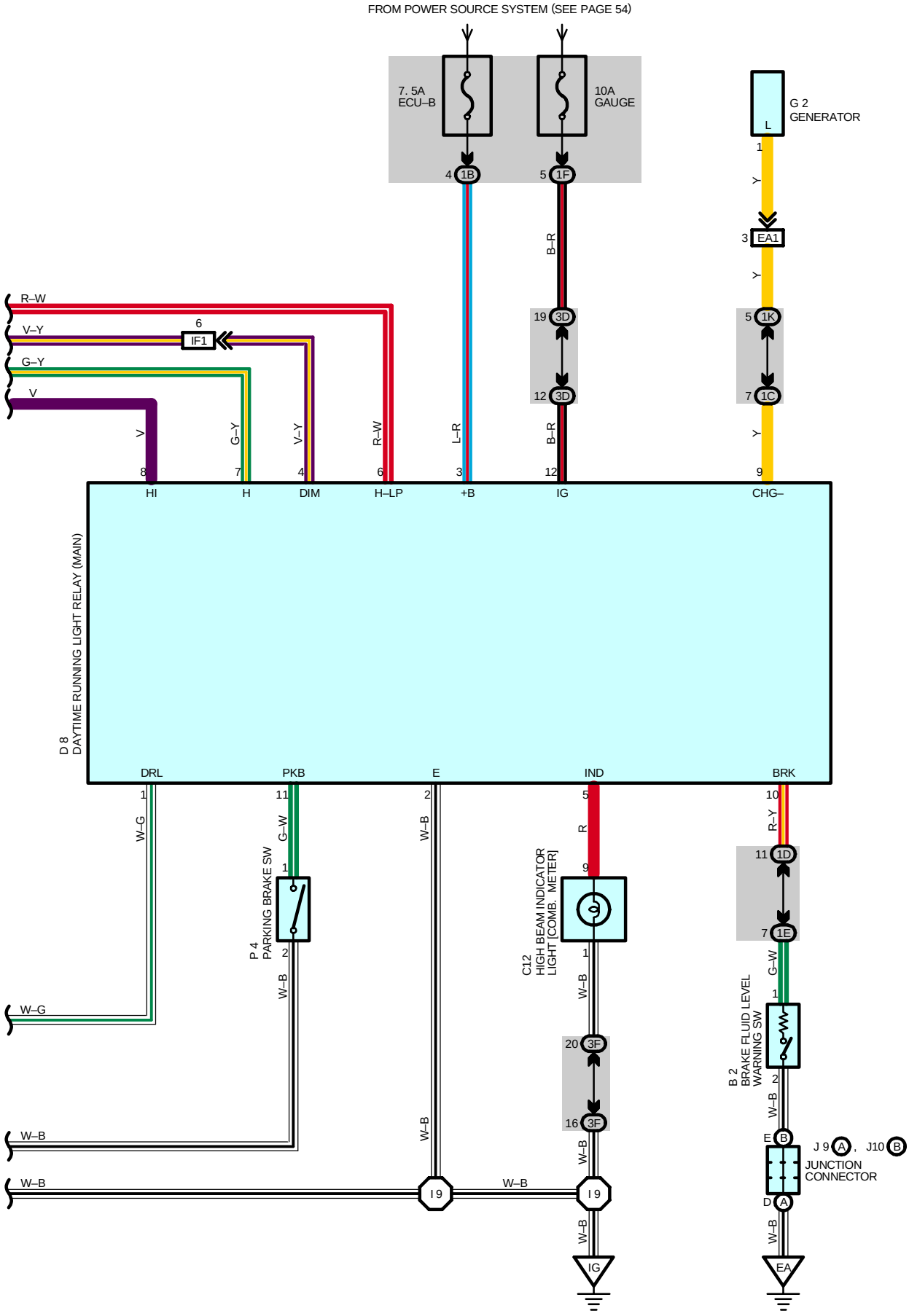
FROM POWER SOURCE SYSTEM (SEE PAGE 54)
7. 5A
ECU–B
10A
GAUGE
G 2
GENERATOR
L
4 1B
5 1F
1
Y
3 EA1
Y
B–R
19 3D
12 3D
5 1K
7 1C
Y
9
R–W
V–Y
G–Y
V
6
IF1
V
G–Y
V–Y
R–W
L–R
B–R
8
7
4
6
3
12
HI
H
DIM
H–LP
+B
IG
CHG–
D 8
DAYTIME RUNNING LIGHT RELAY (MAIN)
DRL
PKB
E
IND
BRK
1
W–G
11
G–W
1
P 4
PARKING BRAKE SW
2
W–B
2
W–B
5
R
9
C12
HIGH BEAM INDICATOR
LIGHT [COMB. METER]
1
W–B
20 3F
16 3F
10
R–Y
11 1D
7 1E
G–W
1
B 2
BRAKE FLUID LEVEL
WARNING SW
2
W–B
E B
J 9 A , J10 B
JUNCTION
CONNECTOR
D A
W–B
W–G
W–B
W–B
I 9
W–B
I 9
W–B
IG
EA

HEADLIGHT (w/ DAYTIME RUNNING LIGHT)

SYSTEM OUTLINE

1. DAYTIME RUNNING LIGHT OPERATION

When the engine is started, voltage generated at TERMINAL L of the generator is applied to TERMINAL 9 of the daytime running light relay (Main).

If the parking brake lever is pulled up (The parking brake SW on) at this time, the relay is not activated, so the daytime running light system does not operate. If the parking brake lever is then released (The parking brake SW off), a signal is input to TERMINAL 11 of the relay. This activates the relay, so current flows from battery to the HEAD relay (Point side) to TERMINAL 4 of the DIMMER relay to TERMINAL 1 to HEAD (LO LH), (LO RH) fuse to TERMINAL 1 of the headlights to TERMINAL 3 to TERMINAL 1 of the daytime running light relay (Main) to TERMINAL 2 to GROUND. This causes headlights to light up (Headlights light up dimmer than full brightness.).

Once the daytime running light system operates and headlights light up, headlights remain on even if the parking brake lever is pulled up (The parking brake SW on).

If the engine stalls and the ignition SW remains on, headlights remain lighted up even through current is no longer output from TERMINAL L of the generator. If the ignition SW is then turned off, the headlights go off. If the engine is started with the parking brake lever released (The parking brake SW off), the daytime running light system operates and headlights light up when the engine starts.

2. HEADLIGHT OPERATION

When the light control SW is switched to HEAD position, current flows from the DRL fuse to TERMINAL 4 of the daytime running light relay No.4 to TERMINAL 3 to TERMINAL 1 of the diode to TERMINAL 2 to body ECU to TERMINAL 13 of the light control SW to TERMINAL 16 to GROUND, activating the daytime running light relay No.4. Current then flows from the HEAD (LO LH), (LO RH) fuse to TERMINAL 1 of the headlights to TERMINAL 3 to TERMINAL 2 of the daytime running light relay No.4 to TERMINAL 1 to GROUND, causing headlights to light up at normal intensity.

When the dimmer SW is switched to HIGH position, the signal from the dimmer SW is input to the daytime running light relay (Main). This activates the relay and current flows from TERMINAL 4 of the DIMMER relay to TERMINAL 2 to TERMINAL 4 of the daytime running light relay (Main), activating the DIMMER relay.

This causes current to flow from TERMINAL 4 of the DIMMER relay to TERMINAL 3 to HEAD (HI LH), (HI RH) fuse to TERMINAL 2 of the headlights to TERMINAL 3 to TERMINAL 2 of the daytime running light relay No.4 to TERMINAL 1 to GROUND, causing headlights to light up at high beam.

When the dimmer SW is switched to FLASH position, the daytime running light relay (Main) is activated and current flows from TERMINAL 4 of the DIMMER relay to TERMINAL 2. Current from the DRL fuse flows TERMINAL 4 of the daytime running light relay No.4 to TERMINAL 3 to TERMINAL 1 of the diode to TERMINAL 2 to TERMINAL 8 of the dimmer SW to TERMINAL 16 to GROUND, and also flows from the HEAD (HI LH), (HI RH) fuse to TERMINAL 2 of the headlights to TERMINAL 3 to TERMINAL 2 of the daytime running light relay No.4 to TERMINAL 1 to GROUND, causing the high beam to operate.

SERVICE HINTS

HEAD RELAY

2–1 : Closed with light control SW at **HEAD** position or dimmer SW at **FLASH** position
Closed with engine running and parking brake lever released

DIMMER RELAY

4–3 : Closed with HEAD relay on and dimmer SW at **HIGH** or **FLASH** position

: PARTS LOCATION

Code	See Page	Code	See Page	Code		See Page
B2	30 (5VZ–FE)	G2	30 (5VZ–FE)	J9	A	31 (5VZ–FE)
	32 (3RZ–FE, 2RZ–FE)		32 (3RZ–FE, 2RZ–FE)			33 (3RZ–FE, 2RZ–FE)
C12	34	H1	30 (5VZ–FE)	J10	B	31 (5VZ–FE)
C14	34		32 (3RZ–FE, 2RZ–FE)			33 (3RZ–FE, 2RZ–FE)
D8	34	H2	30 (5VZ–FE)	P4		35
D9	34		32 (3RZ–FE, 2RZ–FE)			
D13	34	J1	35			

: RELAY BLOCKS

Code	See Page	Relay Blocks (Relay Block Location)
2	21	R/B No.2 (Engine Compartment Left)

: JUNCTION BLOCK AND WIRE HARNESS CONNECTOR

Code	See Page	Junction Block and Wire Harness (Connector Location)
1B	23	Cowl Wire and J/B No.1 (Lower Finish Panel)
1C		
1D		
1E	23	Engine Room Main Wire and J/B No.1 (Lower Finish Panel)
1F	23	Cowl Wire and J/B No.1 (Lower Finish Panel)
1K	23	Engine Room Main Wire and J/B No.1 (Lower Finish Panel)
1L	22	Cowl Wire and J/B No.1 (Lower Finish Panel)
3A	24	Cowl Wire and J/B No.3 (Behind the Instrument Panel Left)
3D		
3F		

: CONNECTOR JOINING WIRE HARNESS AND WIRE HARNESS

Code	See Page	Joining Wire Harness and Wire Harness (Connector Location)
EA1	40 (5VZ–FE)	Engine Room Main Wire and Engine No.2 Wire (Near the Battery)
	42 (3RZ–FE, 2RZ–FE)	
IF1	44	Engine Room Main Wire and Cowl Wire (Left Kick Panel)

: GROUND POINTS

Code	See Page	Ground Points Location
EA	40 (5VZ–FE)	Front Left Fender
	42 (3RZ–FE, 2RZ–FE)	
IE	44	Around the Right Edge of the Reinforcement
IG	44	Around the Left Edge of the Reinforcement

: SPLICE POINTS

Code	See Page	Wire Harness with Splice Points	Code	See Page	Wire Harness with Splice Points
E3	40 (5VZ–FE)	Engine Room Main Wire	I9	44	Cowl Wire
	42 (3RZ–FE, 2RZ–FE)				

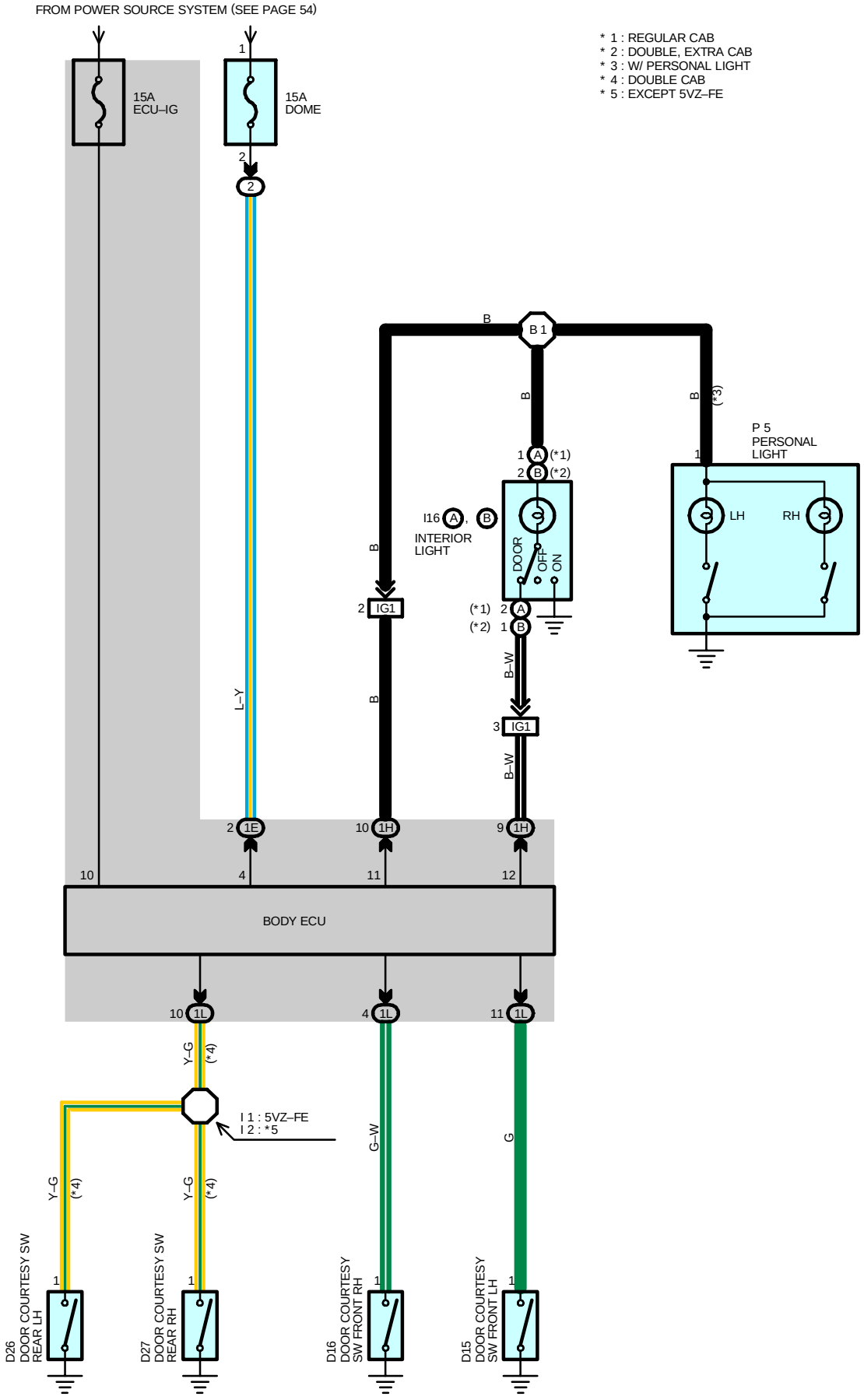
FROM POWER SOURCE SYSTEM (SEE PAGE 54)
* 1 : REGULAR CAB
* 2 : DOUBLE, EXTRA CAB
* 3 : W/ PERSONAL LIGHT
* 4 : DOUBLE CAB
* 5 : EXCEPT 5VZ–FE
15A ECU–IG
15A DOME
B
B 1
B
B
(*3)
P 5 PERSONAL LIGHT
LH
RH
I16
INTERIOR LIGHT
DOOR
OFF
ON
(*1)
(*2)
IG1
B–W
L–Y
2 1E
10 1H
9 1H
10
4
11
12
BODY ECU
10 1L
4 1L
11 1L
Y–G
(*4)
I 1 : 5VZ–FE
I 2 : *5
G–W
G
D26 DOOR COURTESY SW REAR LH
D27 DOOR COURTESY SW REAR RH
D16 DOOR COURTESY SW FRONT RH
D15 DOOR COURTESY SW FRONT LH

SERVICE HINTS

D15, D16, D26, D27 DOOR COURTESY SW FRONT REAR LH, RH

1–GROUND : Closed with door open

: PARTS LOCATION

Code	See Page	Code		See Page	Code		See Page
D15	34	D27		36 (Double Cab)	I16	B	37 (Except Double Cab)
D16	34	I16	A	37 (Except Double Cab)	P5		36 (Double Cab)
D26	36 (Double Cab)		B	36 (Double Cab)			37 (Except Double Cab)

: RELAY BLOCKS

Code	See Page	Relay Blocks (Relay Block Location)
2	21	R/B No.2 (Engine Compartment Left)

: JUNCTION BLOCK AND WIRE HARNESS CONNECTOR

Code	See Page	Junction Block and Wire Harness (Connector Location)
1E	23	Engine Room Main Wire and J/B No.1 (Lower Finish Panel)
1H	23	Cowl Wire and J/B No.1 (Lower Finish Panel)
1L	22	

: CONNECTOR JOINING WIRE HARNESS AND WIRE HARNESS

Code	See Page	Joining Wire Harness and Wire Harness (Connector Location)
IG1	44	Cowl Wire and Roof Wire (Left Kick Panel)

: SPLICE POINTS

Code	See Page	Wire Harness with Splice Points	Code	See Page	Wire Harness with Splice Points
I1	44	Cowl Wire	B1	46 (Double Cab)	Roof Wire
I2				48 (Except Double Cab)	

TAILLIGHT AND ILLUMINATION

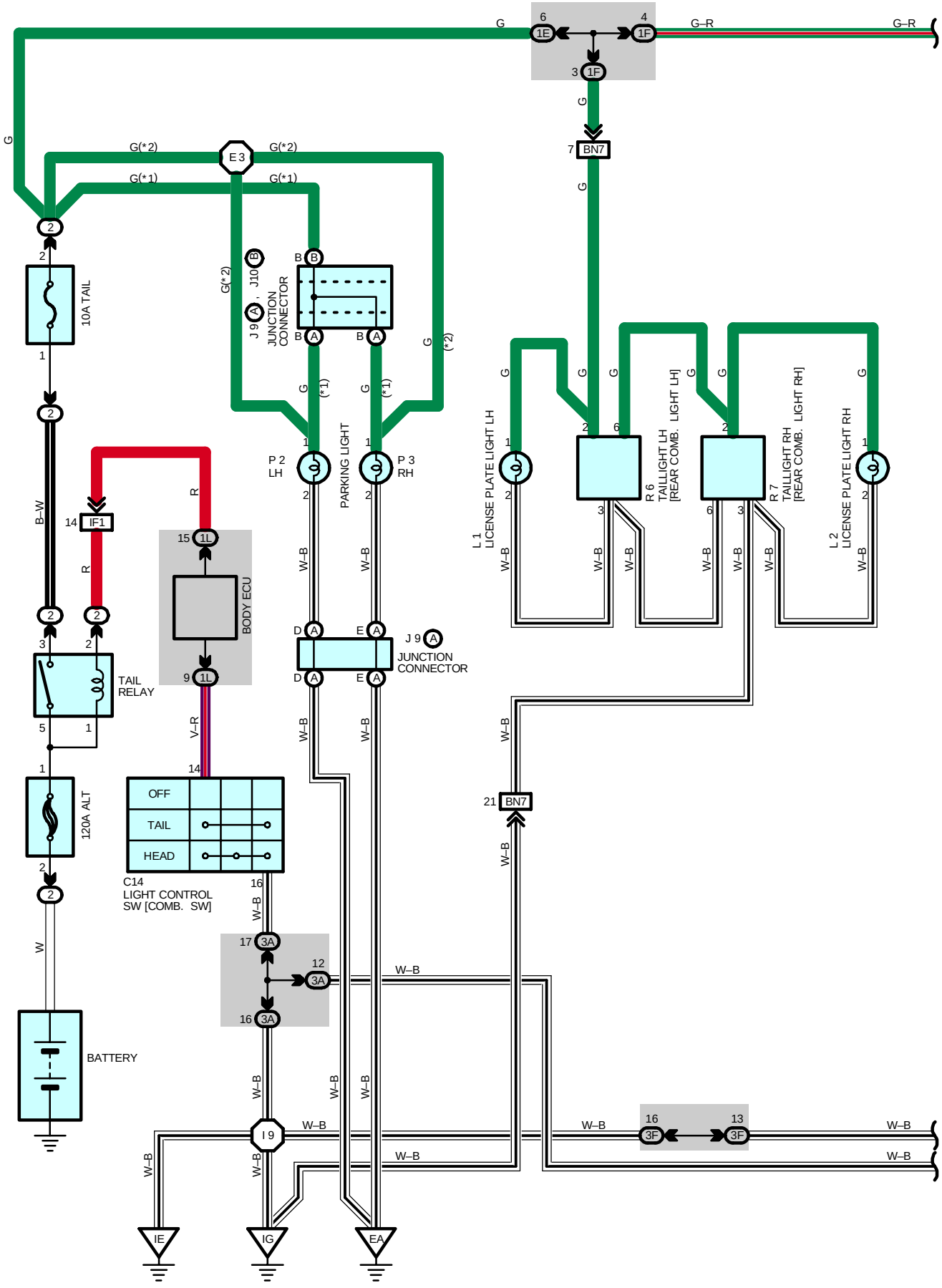
G
6
1E
4
1F
G–R
G–R
3
1F
G
7
BN7
G
G(*2)
E 3
G(*2)
G(*1)
G(*1)
2
2
10A TAIL
1
2
B–W
14
IF1
R
R
15
1L
BODY ECU
9
1L
2
2
3
2
TAIL
RELAY
5
1
1
120A ALT
2
2
W
BATTERY
V–R
14
OFF
TAIL
HEAD
C14
LIGHT CONTROL
SW [COMB. SW]
16
W–B
17
3A
12
3A
16
3A
W–B
W–B
W–B
I 9
W–B
W–B
W–B
W–B
IE
IG
EA
G(*2)
J 9
J10
JUNCTION
CONNECTOR
B
A
B
A
B
A
G
(*1)
G
(*1)
G
(*2)
P 2
LH
PARKING LIGHT
P 3
RH
1
2
1
2
W–B
W–B
D
A
E
A
J 9
JUNCTION
CONNECTOR
D
A
E
A
W–B
W–B
W–B
21
BN7
W–B
W–B
W–B
W–B

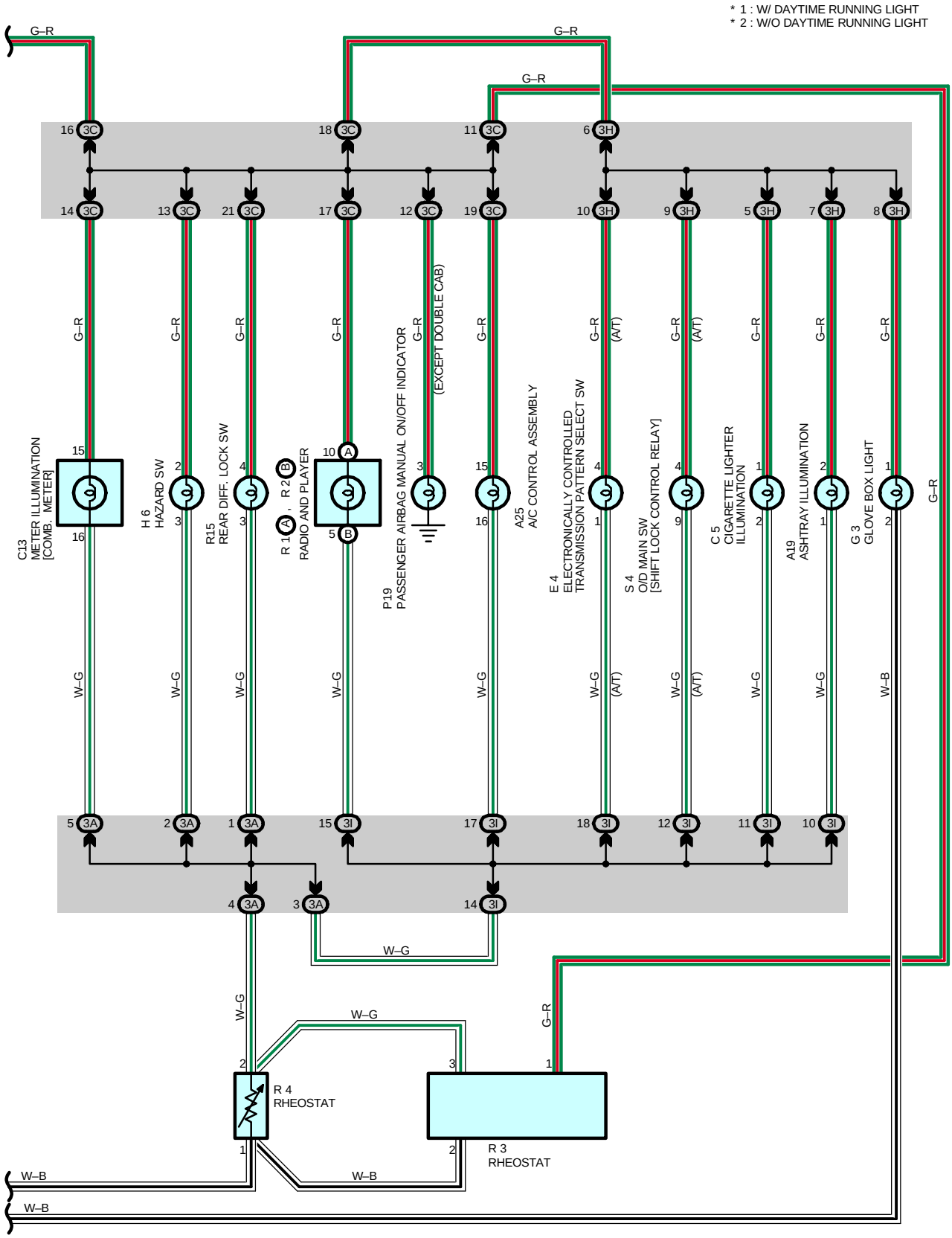
* 1 : W/ DAYTIME RUNNING LIGHT
* 2 : W/O DAYTIME RUNNING LIGHT
G–R
W–G
W–B
C13
METER ILLUMINATION
[COMB. METER]
H 6
HAZARD SW
R15
REAR DIFF. LOCK SW
R 1 , R 2
RADIO AND PLAYER
P19
PASSENGER AIRBAG MANUAL ON/OFF INDICATOR
(EXCEPT DOUBLE CAB)
A25
A/C CONTROL ASSEMBLY
E 4
ELECTRONICALLY CONTROLLED
TRANSMISSION PATTERN SELECT SW
S 4
O/D MAIN SW
[SHIFT LOCK CONTROL RELAY]
C 5
CIGARETTE LIGHTER
ILLUMINATION
A19
ASHTRAY ILLUMINATION
G 3
GLOVE BOX LIGHT
(A/T)
R 4
RHEOSTAT
R 3
RHEOSTAT

TAILLIGHT AND ILLUMINATION

SERVICE HINTS

C14 LIGHT CONTROL SW [COMB. SW]

14–16 : Closed with light control SW at **TAIL** or **HEAD** position

TAIL RELAY

3–5 : Closed with light control SW at **TAIL** or **HEAD** position

: PARTS LOCATION

Code	See Page	Code	See Page	Code	See Page
A19	34	J10 B	33 (3RZ–FE, 2RZ–FE)	R2 B	35
A25	34	L1	36 (Double Cab)	R3	35
C5	34		37 (Except Double Cab)	R4	35
C13	34	L2	36 (Double Cab)	R6	36 (Double Cab)
C14	34		37 (Except Double Cab)		37 (Except Double Cab)
E4	35	P2	31 (5VZ–FE)	R7	36 (Double Cab)
G3	35		33 (3RZ–FE, 2RZ–FE)		37 (Except Double Cab)
H6	35	P3	31 (5VZ–FE)	R15	35
J9 A	31 (5VZ–FE)		33 (3RZ–FE, 2RZ–FE)	S4	35
	33 (3RZ–FE, 2RZ–FE)	P19	35		
J10 B	31 (5VZ–FE)	R1 A	35		

: RELAY BLOCKS

Code	See Page	Relay Blocks (Relay Block Location)
2	21	R/B No.2 (Engine Compartment Left)

: JUNCTION BLOCK AND WIRE HARNESS CONNECTOR

Code	See Page	Junction Block and Wire Harness (Connector Location)
1E	23	Engine Room Main Wire and J/B No.1 (Lower Finish Panel)
1F	23	Cowl Wire and J/B No.1 (Lower Finish Panel)
1L	22	
3A	24	Cowl Wire and J/B No.3 (Behind the Instrument Panel Left)
3C		
3F		
3H	26	Cowl Wire and J/B No.3 (Behind the Instrument Panel Center)
3I		

: CONNECTOR JOINING WIRE HARNESS AND WIRE HARNESS

Code	See Page	Joining Wire Harness and Wire Harness (Connector Location)
IF1	44	Engine Room Main Wire and Cowl Wire (Left Kick Panel)
BN7	46 (Double Cab)	Frame Wire and Cowl Wire (Under the Driver's Seat)
	48 (Except Double Cab)	

: GROUND POINTS

Code	See Page	Ground Points Location
EA	40 (5VZ–FE)	Front Left Fender
	42 (3RZ–FE, 2RZ–FE)	
IE	44	Around the Right Edge of the Reinforcement
IG	44	Around the Left Edge of the Reinforcement

: SPLICE POINTS

Code	See Page	Wire Harness with Splice Points	Code	See Page	Wire Harness with Splice Points
E3	40 (5VZ–FE)	Engine Room Main Wire	I9	44	Cowl Wire
	42 (3RZ–FE, 2RZ–FE)				

TURN SIGNAL AND HAZARD WARNING LIGHT

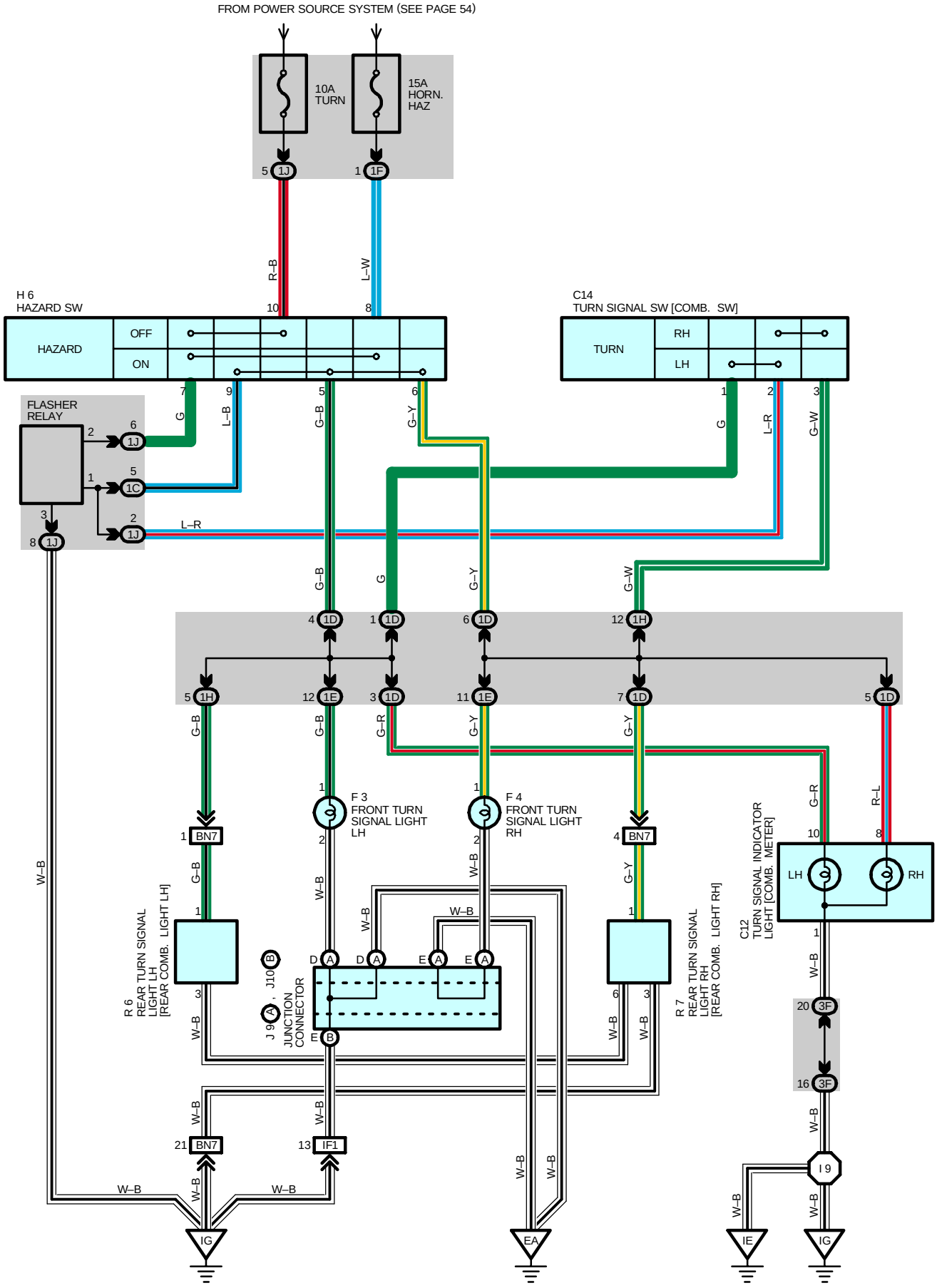

SERVICE HINTS

FLASHER RELAY

2–GROUND : Approx. **12** volts with ignition SW on or hazard SW on

1–GROUND : Changes from **12** to **0** volts with ignition SW on and turn signal SW left or right, or with hazard SW on

: PARTS LOCATION

Code	See Page	Code		See Page	Code		See Page
C12	34	F4		32 (3RZ–FE, 2RZ–FE)	J10	B	33 (3RZ–FE, 2RZ–FE)
C14	34	H6		35	R6		36 (Double Cab)
F3	30 (5VZ–FE)	J9	A	31 (5VZ–FE)			37 (Except Double Cab)
	32 (3RZ–FE, 2RZ–FE)			33 (3RZ–FE, 2RZ–FE)	R7		36 (Double Cab)
F4	30 (5VZ–FE)	J10	B	31 (5VZ–FE)			37 (Except Double Cab)

: JUNCTION BLOCK AND WIRE HARNESS CONNECTOR

Code	See Page	Junction Block and Wire Harness (Connector Location)
1C	23	Cowl Wire and J/B No.1 (Lower Finish Panel)
1D		
1E	23	Engine Room Main Wire and J/B No.1 (Lower Finish Panel)
1F	23	Cowl Wire and J/B No.1 (Lower Finish Panel)
1H		
1J		
3F	24	Cowl Wire and J/B No.3 (Behind the Instrument Panel Left)

: CONNECTOR JOINING WIRE HARNESS AND WIRE HARNESS

Code	See Page	Joining Wire Harness and Wire Harness (Connector Location)
IF1	44	Engine Room Main Wire and Cowl Wire (Left Kick Panel)
BN7	46 (Double Cab)	Frame Wire and Cowl Wire (Under the Driver's Seat)
	48 (Except Double Cab)	

: GROUND POINTS

Code	See Page	Ground Points Location
EA	40 (5VZ–FE)	Front Left Fender
	42 (3RZ–FE, 2RZ–FE)	
IE	44	Around the Right Edge of the Reinforcement
IG	44	Around the Left Edge of the Reinforcement

: SPLICE POINTS

Code	See Page	Wire Harness with Splice Points	Code	See Page	Wire Harness with Splice Points
I9	44	Cowl Wire			

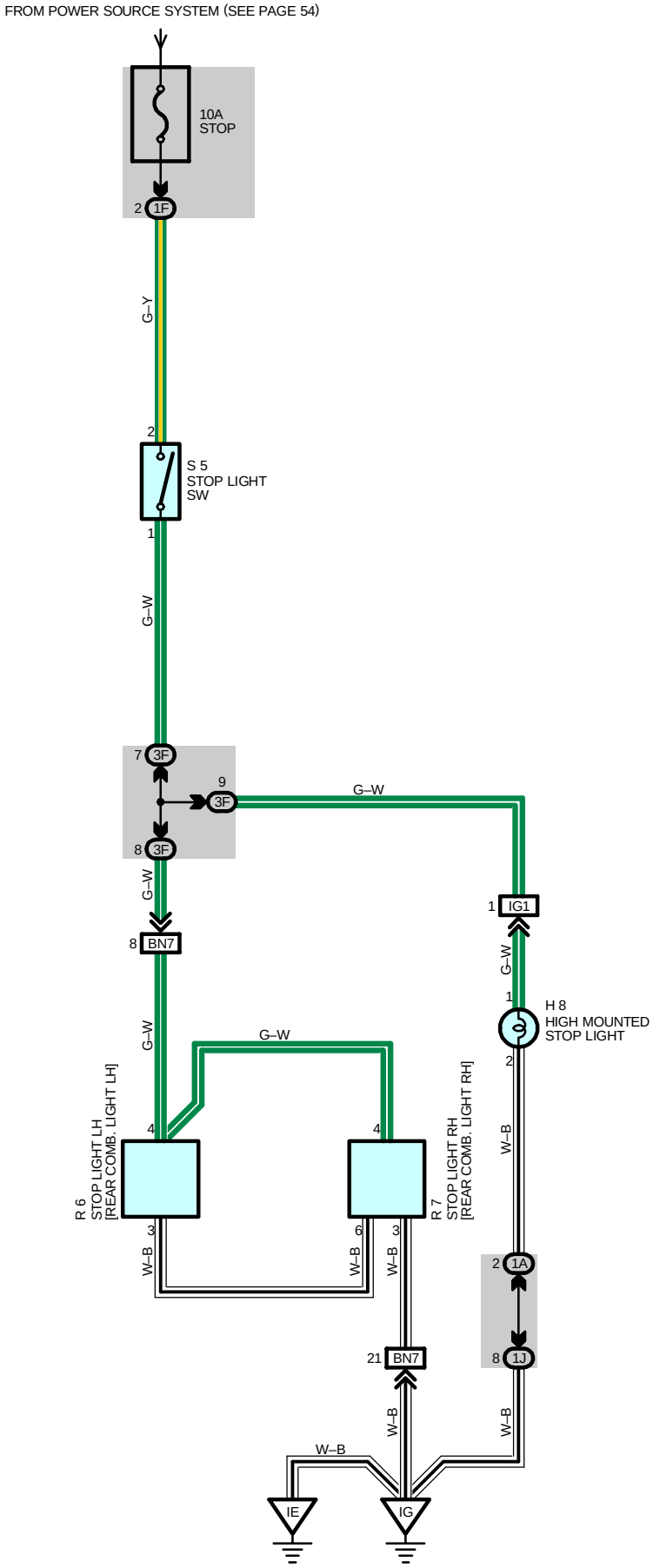
FROM POWER SOURCE SYSTEM (SEE PAGE 54)
10A
STOP
2 1F
G–Y
2
S 5
STOP LIGHT
SW
1
G–W
7 3F
9 3F
8 3F
G–W
8 BN7
G–W
G–W
1 IG1
G–W
1
H 8
HIGH MOUNTED
STOP LIGHT
2
W–B
R 6
STOP LIGHT LH
[REAR COMB. LIGHT LH]
4
3
W–B
6
W–B
4
R 7
STOP LIGHT RH
[REAR COMB. LIGHT RH]
3
W–B
2 1A
8 1J
21 BN7
W–B
W–B
W–B
IE
IG

SERVICE HINTS

S5 STOP LIGHT SW

2–1 : Closed with brake pedal depressed

: PARTS LOCATION

Code	See Page	Code	See Page	Code	See Page
H8	36 (Double Cab)	R6	37 (Except Double Cab)	S5	35
	37 (Except Double Cab)	R7	36 (Double Cab)		
R6	36 (Double Cab)		37 (Except Double Cab)		

: JUNCTION BLOCK AND WIRE HARNESS CONNECTOR

Code	See Page	Junction Block and Wire Harness (Connector Location)
1A	23	Roof Wire and J/B No.1 (Lower Finish Panel)
1F	23	Cowl Wire and J/B No.1 (Lower Finish Panel)
1J		
3F	24	Cowl Wire and J/B No.3 (Behind the Instrument Panel Left)

: CONNECTOR JOINING WIRE HARNESS AND WIRE HARNESS

Code	See Page	Joining Wire Harness and Wire Harness (Connector Location)
IG1	44	Cowl Wire and Roof Wire (Left Kick Panel)
BN7	46 (Double Cab)	Frame Wire and Cowl Wire (Under the Driver's Seat)
	48 (Except Double Cab)	

: GROUND POINTS

Code	See Page	Ground Points Location
IE	44	Around the Right Edge of the Reinforcement
IG	44	Around the Left Edge of the Reinforcement

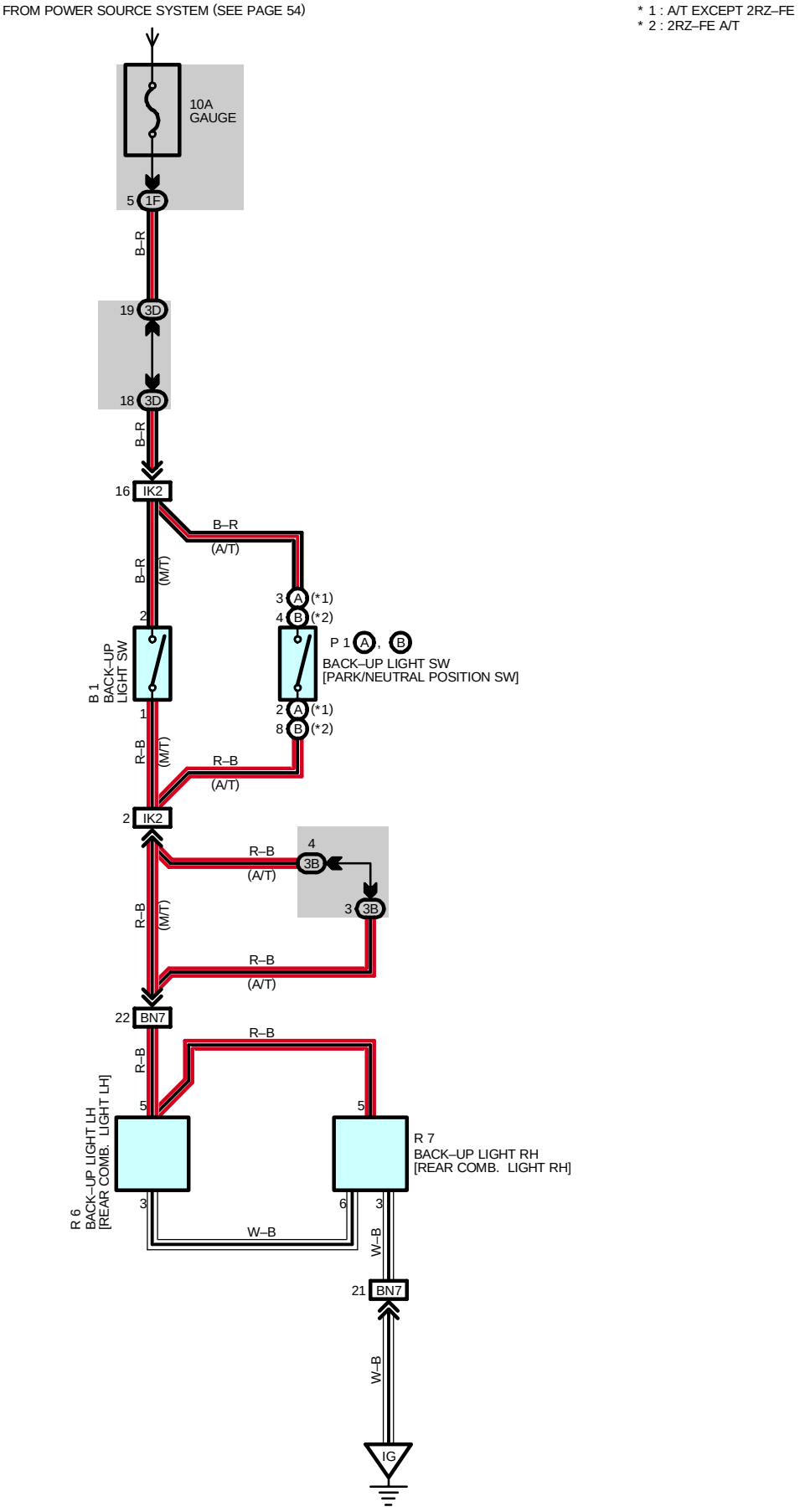
FROM POWER SOURCE SYSTEM (SEE PAGE 54)
* 1 : A/T EXCEPT 2RZ–FE
* 2 : 2RZ–FE A/T
10A
GAUGE
5 1F
B–R
19 3D
18 3D
B–R
16 IK2
B–R
(A/T)
B–R
(M/T)
3 A (*1)
4 B (*2)
P 1 A, B
BACK–UP LIGHT SW
[PARK/NEUTRAL POSITION SW]
2 A (*1)
8 B (*2)
B 1
BACK–UP
LIGHT SW
2
1
R–B
(M/T)
R–B
(A/T)
2 IK2
R–B
(A/T)
4
3B
3 3B
R–B
(M/T)
R–B
(A/T)
22 BN7
R–B
R–B
5
5
R 7
BACK–UP LIGHT RH
[REAR COMB. LIGHT RH]
R 6
BACK–UP LIGHT LH
[REAR COMB. LIGHT LH]
3
6
3
W–B
W–B
21 BN7
W–B
IG

SERVICE HINTS

P1 (A), (B) BACK–UP LIGHT SW [PARK/NEUTRAL POSITION SW] (A/T)

(A) 3–(A) 2, (B) 4–(B) 8 : Closed with shift lever in **R** position

B1 BACK–UP LIGHT SW (M/T)

2–1 : Closed with shift lever in **R** position

: PARTS LOCATION

Code		See Page	Code		See Page	Code	See Page
B1		30 (5VZ–FE)	P1	A	33 (3RZ–FE)	R6	37 (Except Double Cab)
		32 (3RZ–FE, 2RZ–FE)		B	33 (2RZ–FE)	R7	36 (Double Cab)
P1	A	31 (5VZ–FE)	R6		36 (Double Cab)		37 (Except Double Cab)

: JUNCTION BLOCK AND WIRE HARNESS CONNECTOR

Code	See Page	Junction Block and Wire Harness (Connector Location)
1F	23	Cowl Wire and J/B No.1 (Lower Finish Panel)
3B	24	Cowl Wire and J/B No.3 (Behind the Instrument Panel Left)
3D		

: CONNECTOR JOINING WIRE HARNESS AND WIRE HARNESS

Code	See Page	Joining Wire Harness and Wire Harness (Connector Location)
IK2	44	Engine Wire and Cowl Wire (Above the Glove Box)
BN7	46 (Double Cab)	Frame Wire and Cowl Wire (Under the Driver's Seat)
	48 (Except Double Cab)	

: GROUND POINTS

Code	See Page	Ground Points Location
IG	44	Around the Left Edge of the Reinforcement

LIGHT AUTO TURN OFF

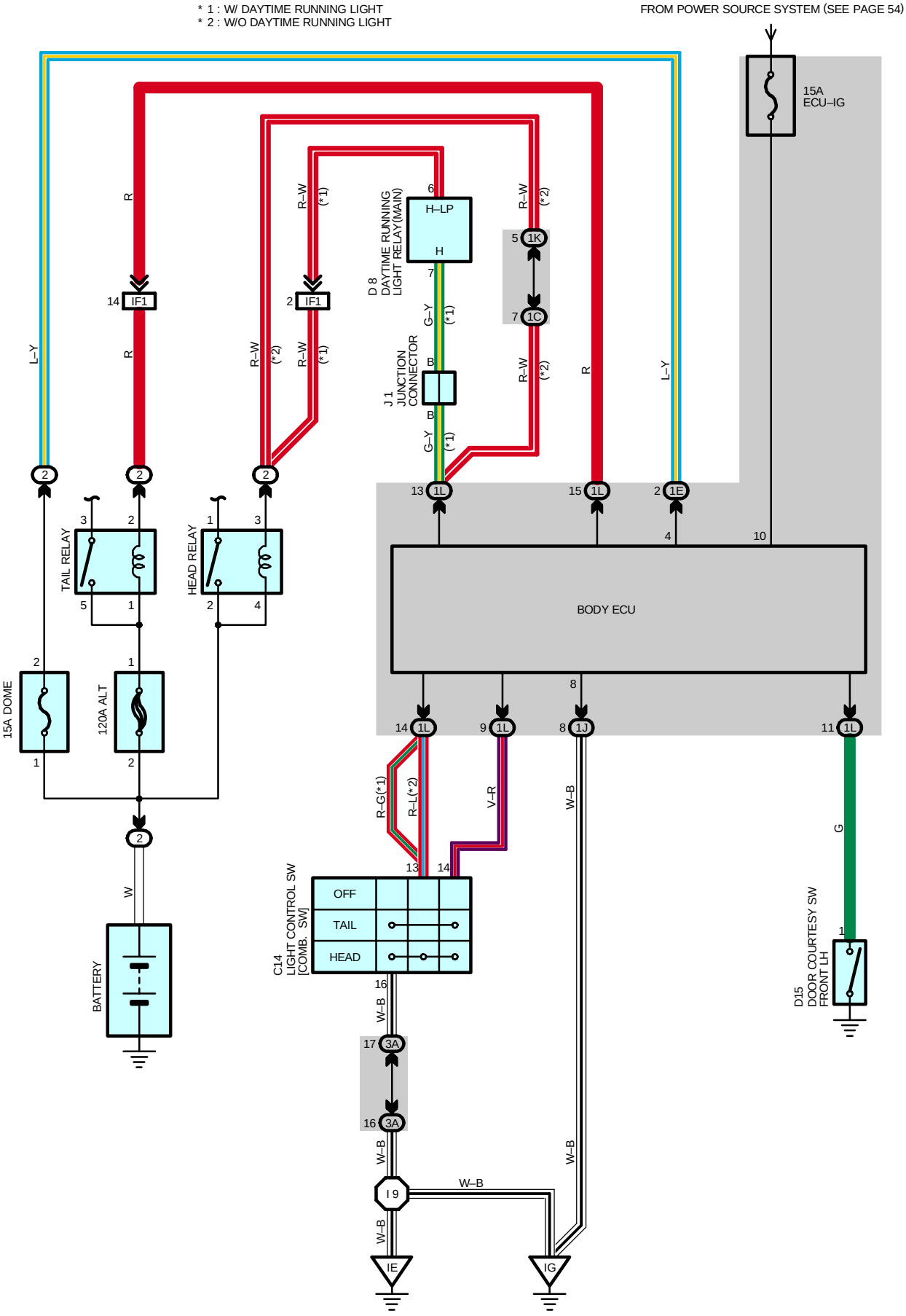

SYSTEM OUTLINE

The light auto turn off system automatically turns the taillight or headlight off according to the door open or close on the driver's side, and prevent failing to turn off the lights.
If the ignition switch is turned to OFF from ON with the headlight or taillight is on, the signal is input in the body ECU. If the driver's seat door is opened at that time, the signal from the door courtesy SW front LH is sent to the body ECU. The signal turns the headlight or taillight off by the body ECU.

SERVICE HINTS

BODY ECU

10–GROUND : Approx. **12** volts with ignition SW at **ON** or **ST** position
4–GROUND : Always approx. **12** volts
8–GROUND : Always continuity

: PARTS LOCATION

Code	See Page	Code	See Page	Code	See Page
C14	34	D15	34		
D8	34	J1	35		

: RELAY BLOCKS

Code	See Page	Relay Blocks (Relay Block Location)
2	21	R/B No.2 (Engine Compartment Left)

: JUNCTION BLOCK AND WIRE HARNESS CONNECTOR

Code	See Page	Junction Block and Wire Harness (Connector Location)
1C	23	Cowl Wire and J/B No.1 (Lower Finish Panel)
1E	23	Engine Room Main Wire and J/B No.1 (Lower Finish Panel)
1J	23	Cowl Wire and J/B No.1 (Lower Finish Panel)
1K	23	Engine Room Main Wire and J/B No.1 (Lower Finish Panel)
1L	22	Cowl Wire and J/B No.1 (Lower Finish Panel)
3A	24	Cowl Wire and J/B No.3 (Behind the Instrument Panel Left)

: CONNECTOR JOINING WIRE HARNESS AND WIRE HARNESS

Code	See Page	Joining Wire Harness and Wire Harness (Connector Location)
IF1	44	Engine Room Main Wire and Cowl Wire (Left Kick Panel)

: GROUND POINTS

Code	See Page	Ground Points Location
IE	44	Around the Right Edge of the Reinforcement
IG	44	Around the Left Edge of the Reinforcement

: SPLICE POINTS

Code	See Page	Wire Harness with Splice Points	Code	See Page	Wire Harness with Splice Points
I9	44	Cowl Wire			

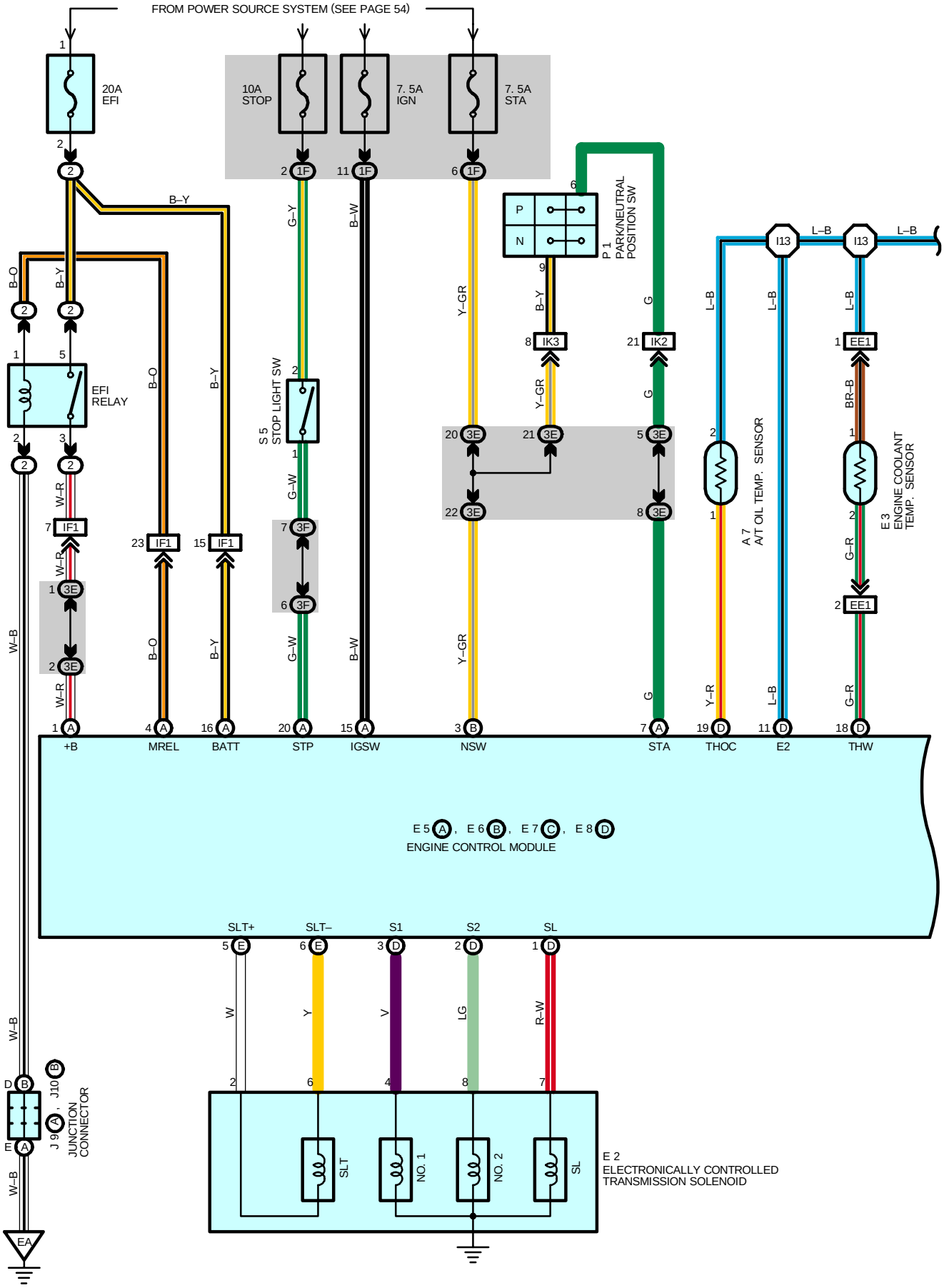
FROM POWER SOURCE SYSTEM (SEE PAGE 54)
20A EFI
10A STOP
7. 5A IGN
7. 5A STA
EFI RELAY
STOP LIGHT SW
P 1 PARK/NEUTRAL POSITION SW
A 7 A/T OIL TEMP. SENSOR
E 3 ENGINE COOLANT TEMP. SENSOR
+B
MREL
BATT
STP
IGSW
NSW
STA
THOC
E2
THW
E5 A, E6 B, E7 C, E8 D
ENGINE CONTROL MODULE
SLT+
SLT–
S1
S2
SL
SLT
NO. 1
NO. 2
SL
E 2
ELECTRONICALLY CONTROLLED TRANSMISSION SOLENOID
J 9 A, J10 B
JUNCTION CONNECTOR
EA

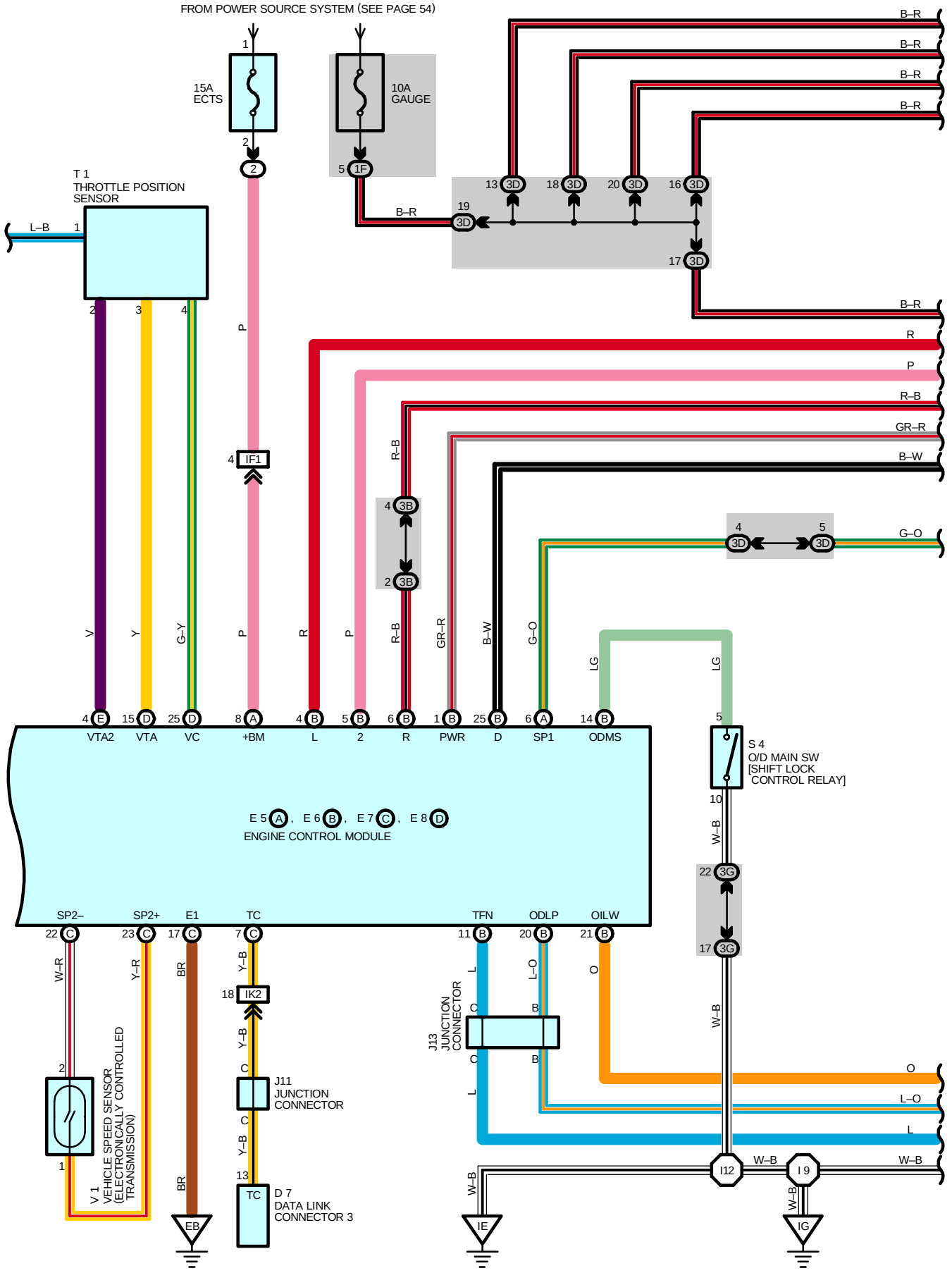
FROM POWER SOURCE SYSTEM (SEE PAGE 54)
15A ECTS
10A GAUGE
T 1 THROTTLE POSITION SENSOR
L–B
B–R
R
P
R–B
GR–R
B–W
G–O
LG
V
Y
G–Y
VTA2
VTA
VC
+BM
L
2
R
PWR
D
SP1
ODMS
E 5 A , E 6 B , E 7 C , E 8 D
ENGINE CONTROL MODULE
S 4 O/D MAIN SW [SHIFT LOCK CONTROL RELAY]
W–B
SP2–
SP2+
E1
TC
TFN
ODLP
OILW
W–R
Y–R
BR
Y–B
L
L–O
O
J13 JUNCTION CONNECTOR
V 1 VEHICLE SPEED SENSOR (ELECTRONICALLY CONTROLLED TRANSMISSION)
J11 JUNCTION CONNECTOR
D 7 DATA LINK CONNECTOR 3
EB
IE
IG
I12
I 9

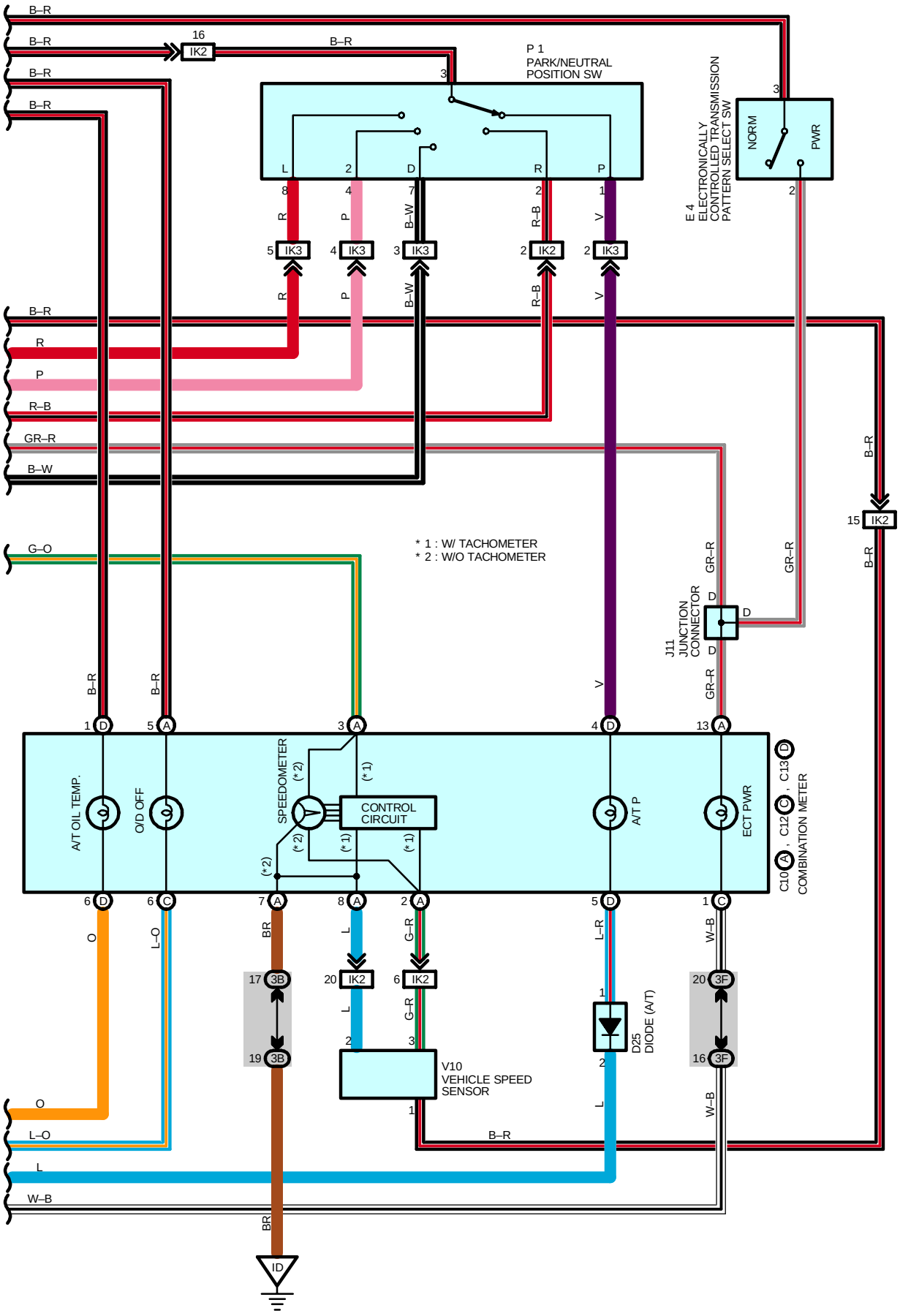
B–R
16
IK2
P 1
PARK/NEUTRAL
POSITION SW
L
2
D
R
P
E 4
ELECTRONICALLY
CONTROLLED TRANSMISSION
PATTERN SELECT SW
NORM
PWR
IK3
IK2
R
P
B–W
R–B
V
G–O
GR–R
* 1 : W/ TACHOMETER
* 2 : W/O TACHOMETER
J11
JUNCTION
CONNECTOR
A/T OIL TEMP.
O/D OFF
SPEEDOMETER
CONTROL
CIRCUIT
A/T P
ECT PWR
C10 , C12 , C13
COMBINATION METER
L–O
BR
L
G–R
L–R
W–B
3B
3F
D25
DIODE (A/T)
V10
VEHICLE SPEED
SENSOR
ID

SYSTEM OUTLINE

Previous automatic transmissions have selected each gear shift using mechanically controlled throttle hydraulic pressure, governor hydraulic pressure and lock-up hydraulic pressure. The electronically controlled transmission, however, electrically controls the governor pressure and lock-up sensor through the solenoid valve. Control of the solenoid valve by the engine control module based on the input signals from each sensor makes smooth driving possible by shift selection for each gear which is most appropriate to the driving conditions at that time.

1. GEAR SHIFT OPERATION

During driving, the engine control module selects the shift for each gear which is most appropriate to the driving conditions, based on input signals from the engine coolant temp. sensor to TERMINAL THW of the engine control module and also the input signals to TERMINAL SP2+ of the engine control module from the vehicle speed sensor devoted to the electronically controlled transmission. Current is then output to the electronically controlled transmission solenoid. When shifting to 1st speed, current flows from TERMINAL S1 of the engine control module to TERMINAL 1 of the electronically controlled transmission solenoid to GROUND, and continuity to the No.1 solenoid causes the shift.

For 2nd speed, current flows from TERMINAL S1 of the engine control module to TERMINAL 1 of the electronically controlled transmission solenoid to GROUND, and from TERMINAL S2 of the engine control module to TERMINAL 2 of the electronically controlled transmission solenoid to GROUND. And continuity to solenoid No.1 and No.2 causes the shift.

For 3rd speed, there is no continuity to No.1 solenoid, only to No.2 causing the shift. Shifting into 4th speed (Overdrive) takes place when there is no continuity to either No.1 or No.2 solenoid.

2. LOCK-UP OPERATION

When the engine control module judges from each signal that lock-up operation conditions have been met, current flows from TERMINAL SL of the engine control module to TERMINAL 3 of the electronically controlled transmission solenoid to GROUND, causing continuity to the lock-up solenoid and causing lock-up operation.

3. STOP LIGHT SW CIRCUIT

If the brake pedal is depressed (Stop light SW on) when driving in lock-up condition, a signal is input to TERMINAL STP of the engine control module, the engine control module operates and continuity to the lock-up solenoid is cut.

4. OVERDRIVE CIRCUIT

* O/D main SW on
  When the O/D main SW is turned on, a signal is input to TERMINAL ODMS of the engine control module and engine control module operation causes gear shift when the conditions for overdrive are met.
* O/D main SW off
  When the O/D main SW is turned off, a signal is input into TERMINAL ODMS of the engine control module, and turns on the O/D off indicator light. This activates the ECU, and the transmission system is controlled not to shift to overdrive.

5. A/T OIL TEMP. WARNING

When the A/T oil temp. sensor affixed to the transmission case detects that the fluid temp. is 150˚C (302˚F) or more, the engine control module operates and the current flowing through the GAUGE fuse flows to the A/T oil temp. warning light to TERMINAL OILW of the engine control module to GROUND, so that the warning light lights up, informing that the oil temp. is high. When the oil temp. drops to 120˚C (248˚F) or less, the engine control module stops operating and the warning light goes out.

ELECTRONICALLY CONTROLLED TRANSMISSION (5VZ–FE)

SERVICE HINTS

E2 ELECTRONICALLY CONTROLLED TRANSMISSION SOLENOID

1, 2, 3–GROUND : Approx. **13** Ω

P1 PARK/NEUTRAL POSITION SW

3–GROUND : Approx. **12** volts with ignition SW ON position

S5 STOP LIGHT SW

1–2 : Closed with brake pedal depressed

E5 (A), E6 (B), E7 (C), E8 (D) ENGINE CONTROL MODULE

S1–E1 : **9**-**14** volts
S2,SL–E1 : **0**-**1.5** volts
STP–E1 : **7.5**–**14** volts with brake pedal depressed
: **0**–**1.5** volts with brake pedal released
THW–E2 : **0.2**–**1.0** volts with coolant temp. **80**˚C (**176**˚F)
THOC–E2 : **4**–**5** volts with fluid temp. **20**˚C (**68**˚F)
VTA–E2 : **0.3**–**0.8** volts with throttle valve fully closed
: **3.2**–**4.9** volts with throttle valve fully open
VC–E2 : **4.5**–**5.5** volts
SP1–E1 : Pulse generation with vehicle moving
2–E1 : **10**–**14** volts with shift lever at **2** position
: **0**–**2** volts with shift lever at except **2** position
L–E1 : **10**–**14** volts with shift lever at **L** position
: **0**–**2** volts with shift lever at except **L** position
OILW–E1 : **0.1**–**4.9** volts
+B–E1 : **9**–**14** volts
BATT–E1 : **9**–**14** volts

: PARTS LOCATION

Code	See Page	Code	See Page	Code	See Page
A7	30 (5VZ–FE)	E4	35	J13	35
C10 A	34	E5 A	35	P1	31 (5VZ–FE)
C12 C	34	E6 B	35	S4	35
C13 D	34	E7 C	35	S5	35
D7	34	E8 D	35	T1	31 (5VZ–FE)
D25	34	J9 A	31 (5VZ–FE)	V1	31 (5VZ–FE)
E2	30 (5VZ–FE)	J10 B	31 (5VZ–FE)	V10	31 (5VZ–FE)
E3	30 (5VZ–FE)	J11	35		

: RELAY BLOCKS

Code	See Page	Relay Blocks (Relay Block Location)
2	21	R/B No.2 (Engine Compartment Left)

: JUNCTION BLOCK AND WIRE HARNESS CONNECTOR

Code	See Page	Junction Block and Wire Harness (Connector Location)
1F	23	Cowl Wire and J/B No.1 (Lower Finish Panel)
3B	24	Cowl Wire and J/B No.3 (Behind the Instrument Panel Left)
3D		
3E		
3F		
3G	26	Cowl Wire and J/B No.3 (Behind the Instrument Panel Center)

: CONNECTOR JOINING WIRE HARNESS AND WIRE HARNESS

Code	See Page	Joining Wire Harness and Wire Harness (Connector Location)
EE1	40 (5VZ–FE)	Engine Wire and Sensor Wire (Over the Cylinder Head)
IF1	44	Engine Room Main Wire and Cowl Wire (Left Kick Panel)
IK2	44	Engine Wire and Cowl Wire (Above the Glove Box)
IK3		



: GROUND POINTS

Code	See Page	Ground Points Location
EA	40 (5VZ–FE)	Front Left Fender
EB	40 (5VZ–FE)	Near the Throttle Body
ID	44	Left Kick Panel
IE	44	Around the Right Edge of the Reinforcement
IG	44	Around the Left Edge of the Reinforcement



: SPLICE POINTS

Code	See Page	Wire Harness with Splice Points	Code	See Page	Wire Harness with Splice Points
I9	44	Cowl Wire	I13	44	Engine Wire
I12					

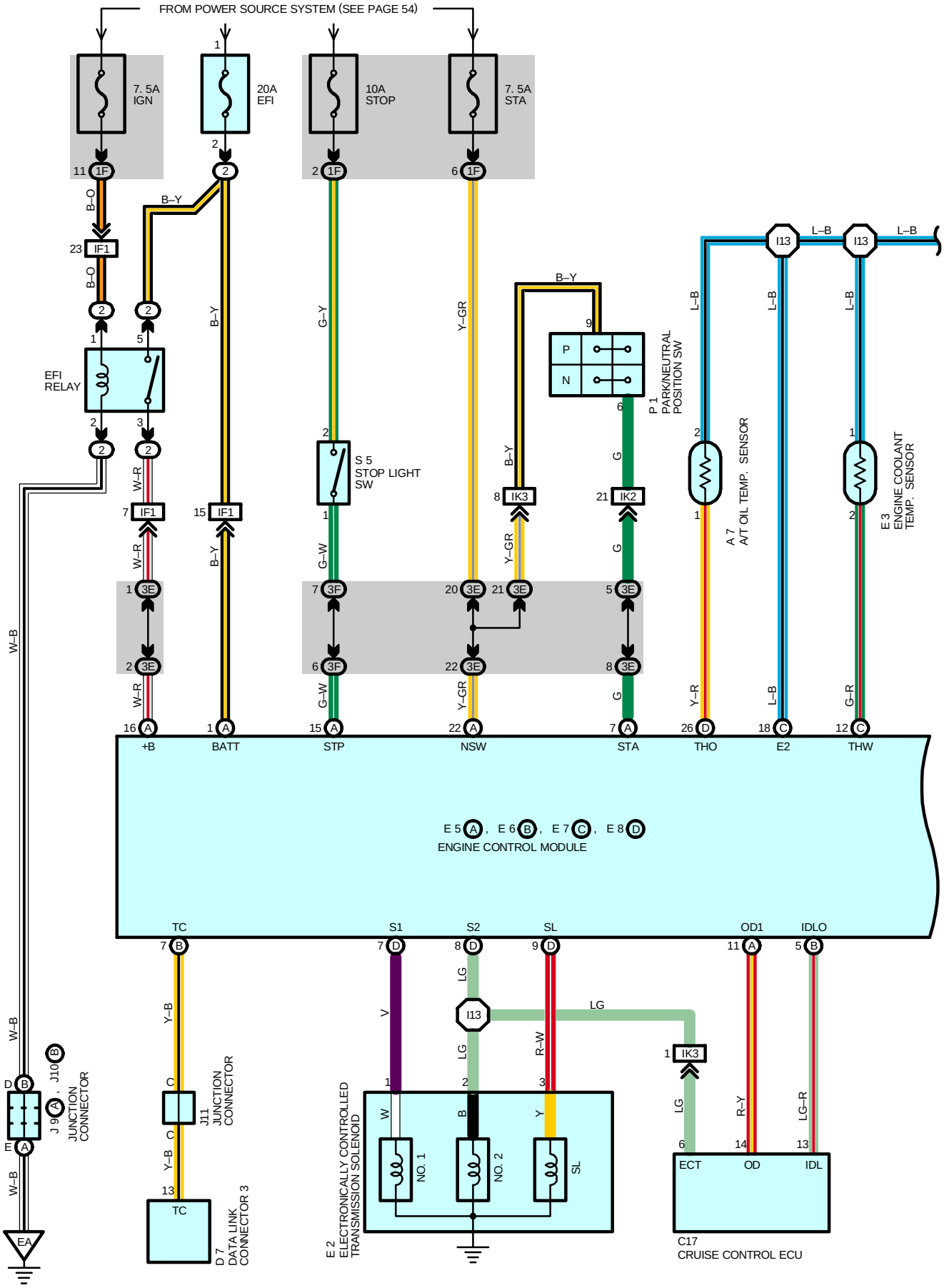
FROM POWER SOURCE SYSTEM (SEE PAGE 54)
7. 5A IGN
20A EFI
10A STOP
7. 5A STA
EFI RELAY
S 5 STOP LIGHT SW
P 1 PARK/NEUTRAL POSITION SW
A 7 A/T OIL TEMP. SENSOR
E 3 ENGINE COOLANT TEMP. SENSOR
+B
BATT
STP
NSW
STA
THO
E2
THW
E 5 , E 6 , E 7 , E 8
ENGINE CONTROL MODULE
TC
S1
S2
SL
OD1
IDLO
J 9 , J10 JUNCTION CONNECTOR
J11 JUNCTION CONNECTOR
D 7 DATA LINK CONNECTOR 3
E 2 ELECTRONICALLY CONTROLLED TRANSMISSION SOLENOID
NO. 1
NO. 2
SL
C17 CRUISE CONTROL ECU
ECT
OD
IDL

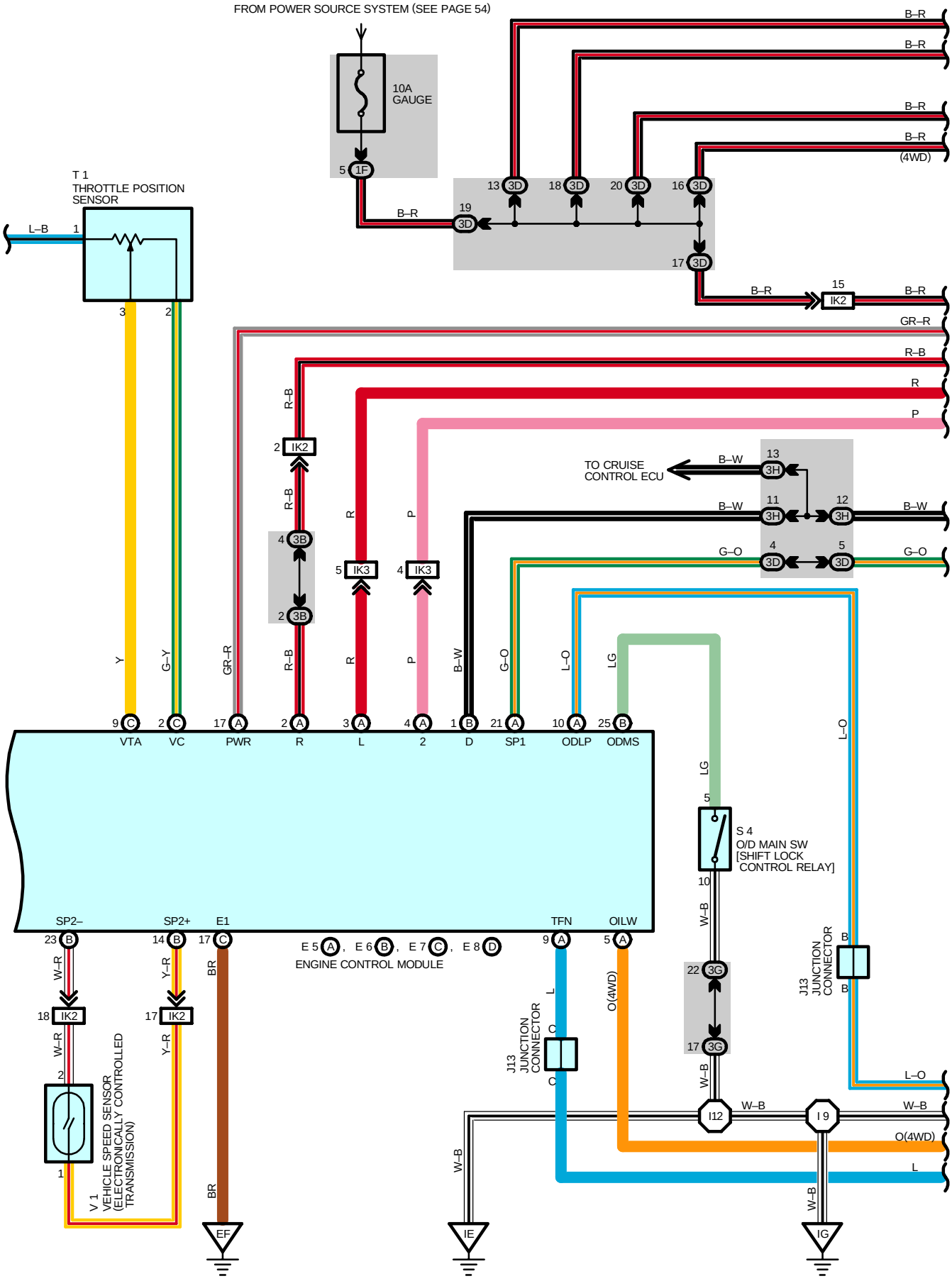
FROM POWER SOURCE SYSTEM (SEE PAGE 54)
10A GAUGE
T 1 THROTTLE POSITION SENSOR
TO CRUISE CONTROL ECU
S 4 O/D MAIN SW [SHIFT LOCK CONTROL RELAY]
J13 JUNCTION CONNECTOR
V 1 VEHICLE SPEED SENSOR (ELECTRONICALLY CONTROLLED TRANSMISSION)
E 5 A , E 6 B , E 7 C , E 8 D
ENGINE CONTROL MODULE
VTA
VC
PWR
R
L
2
D
SP1
ODLP
ODMS
SP2–
SP2+
E1
TFN
OILW
EF
IE
IG
(4WD)

ELECTRONICALLY CONTROLLED TRANSMISSION (3RZ–FE)

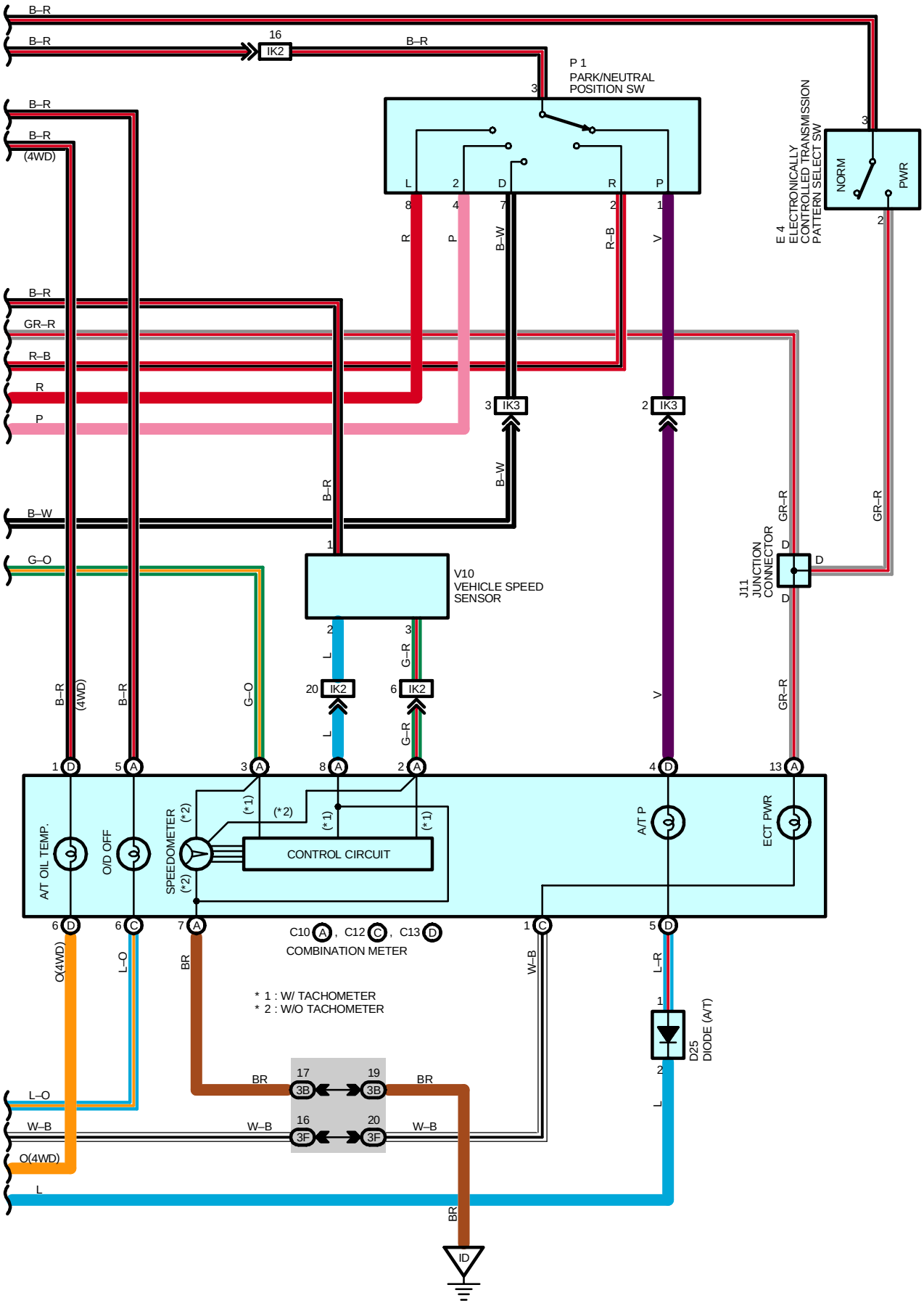

SYSTEM OUTLINE

Previous automatic transmissions have selected each gear shift using mechanically controlled throttle hydraulic pressure, governor hydraulic pressure and lock-up hydraulic pressure. The electronically controlled transmission, however, electrically controls the governor pressure and lock-up pressure through the solenoid valve. Control of the solenoid valve by the engine control module based on the input signals from each sensor makes smooth driving possible by shift selection for each gear which is most appropriate to the driving conditions at that time.

1. GEAR SHIFT OPERATION

During driving, the engine control module selects the shift for each gear which is most appropriate to the driving conditions, based on input signals from the engine coolant temp. sensor to TERMINAL THW of the engine control module, and also the input signals to TERMINAL SP2+ of the engine control module from the vehicle speed sensor devoted to the electronically controlled transmission. Current is then output to the electronically controlled transmission solenoid. When shifting to 1st speed, current flows from TERMINAL S1 of the engine control module to TERMINAL 1 of the electronically controlled transmission solenoid to GROUND, and continuity to the No.1 solenoid causes the shift.

For 2nd speed, current flows from TERMINAL S1 of the engine control module to TERMINAL 1 of the electronically controlled transmission solenoid to GROUND, and from TERMINAL S2 of the engine control module to TERMINAL 2 of the electronically controlled transmission solenoid to GROUND, and continuity to solenoid No.1 and No.2 causes the shift.

For 3rd speed, there is no continuity to No.1 solenoid, only to No.2 causing the shift. Shifting into 4th speed (Overdrive) takes place when there is no continuity to either No.1 or No.2 solenoid.

2. LOCK-UP OPERATION

When the engine control module judges from each signal that lock-up operation conditions have been met, current flows from TERMINAL SL of the engine control module to TERMINAL 3 of the electronically controlled transmission solenoid to GROUND, causing continuity to the lock-up solenoid and causing lock-up operation.

3. STOP LIGHT SW CIRCUIT

If the brake pedal is depressed (Stop light SW on) when driving in lock-up condition, a signal is input to TERMINAL STP of the engine control module, the engine control module operates and continuity to the lock–up solenoid is cut.

4. OVERDRIVE CIRCUIT

- O/D main SW on
  When the O/D main SW is turned on, a signal is input to TERMINAL ODMS of the engine control module and engine control module operation causes gear shift when the conditions for overdrive are met.
- O/D main SW off
  When the O/D main SW is turned off, a signal is input into TERMINAL ODMS of the engine control module, and turns on the O/D off indicator light. This activates the ECU, and the transmission system is controlled not to shift to overdrive.

ELECTRONICALLY CONTROLLED TRANSMISSION (3RZ–FE)

SERVICE HINTS

E2 ELECTRONICALLY CONTROLLED TRANSMISSION SOLENOID

1, 2, 3–GROUND : Approx. **13** Ω

P1 PARK/NEUTRAL POSITION SW

3–GROUND : Approx. **12** volts with ignition SW **ON** position

S5 STOP LIGHT SW

2–1 : Closed with brake pedal depressed

E5 (A), E6 (B), E7 (C), E8 (D) ENGINE CONTROL MODULE

S1–E1 : **9**–**14** volts
S2, SL–E1 : **0**–**1.5** volts
STP–E1 : **7.5**–**14** volts with brake pedal depressed
: **0**–**1.5** volts with brake pedal released
THW–E2 : **0.2**–**1.0** volts with coolant temp. **80**˚C (**176**˚F)
THO–E2 : **4**–**5** volts with fluid temp. **20**˚C (**68**˚F)
VTA–E2 : **0.3**–**0.8** volts with throttle valve fully closed
: **3.2**–**4.9** volts with throttle valve fully open
VC–E2 : **4.5**–**5.5** volts
OD1–E1 : **4.5**–**5.5** volts
SP1–E1 : Pulse generation with vehicle moving
2–E1 : **10**–**14** volts with shift lever at **2** position
: **0**–**2** volts with shift lever at except **2** position
L–E1 : **10**–**14** volts with shift lever at **L** position
: **0**–**2** volts with shift lever at except **L** position
R–E1 : **10**–**4** volts with shift lever at **R** position
0–**2** volts with shift lever at except **R** position
PWR–E1 : **7.5**–**14** volts with pattern select SW **PWR** position
0–**1.5** volts with pattern select SW **NORM** position
+B–E1 : **9**–**14** volts
BATT–E1 : **9**–**14** volts

: PARTS LOCATION

Code	See Page	Code	See Page	Code	See Page
A7	32 (3RZ–FE)	E3	32 (3RZ–FE)	J11	35
C10 A	34	E4	35	J13	35
C12 C	34	E5 A	35	P1	33 (3RZ–FE)
C13 D	34	E6 B	35	S4	35
C17	34	E7 C	35	S5	35
D7	34	E8 D	35	T1	33 (3RZ–FE)
D25	34	J9 A	33 (3RZ–FE)	V1	33 (3RZ–FE)
E2	32 (3RZ–FE)	J10 B	33 (3RZ–FE)	V10	33 (3RZ–FE)

: RELAY BLOCKS

Code	See Page	Relay Blocks (Relay Block Location)
2	21	R/B No.2 (Engine Compartment Left)

: JUNCTION BLOCK AND WIRE HARNESS CONNECTOR

Code	See Page	Junction Block and Wire Harness (Connector Location)
1F	23	Cowl Wire and J/B No.1 (Lower Finish Panel)
3B	24	Cowl Wire and J/B No.3 (Behind the Instrument Panel Left)
3D		
3E		
3F		
3G	26	Cowl Wire and J/B No.3 (Behind the Instrument Panel Center)
3H		

: CONNECTOR JOINING WIRE HARNESS AND WIRE HARNESS

Code	See Page	Joining Wire Harness and Wire Harness (Connector Location)
IF1	44	Engine Room Main Wire and Cowl Wire (Left Kick Panel)
IK2	44	Engine Wire and Cowl Wire (Above the Glove Box)
IK3		

: GROUND POINTS

Code	See Page	Ground Points Location
EA	42 (3RZ–FE)	Front Left Fender
EF	42 (3RZ–FE)	Ignition Coil Braket
ID	44	Left Kick Panel
IE	44	Around the Right Edge of the Reinforcement
IG	44	Around the Left Edge of the Reinforcement

: SPLICE POINTS

Code	See Page	Wire Harness with Splice Points	Code	See Page	Wire Harness with Splice Points
I9	44	Cowl Wire	I13	44	Engine Wire
I12					

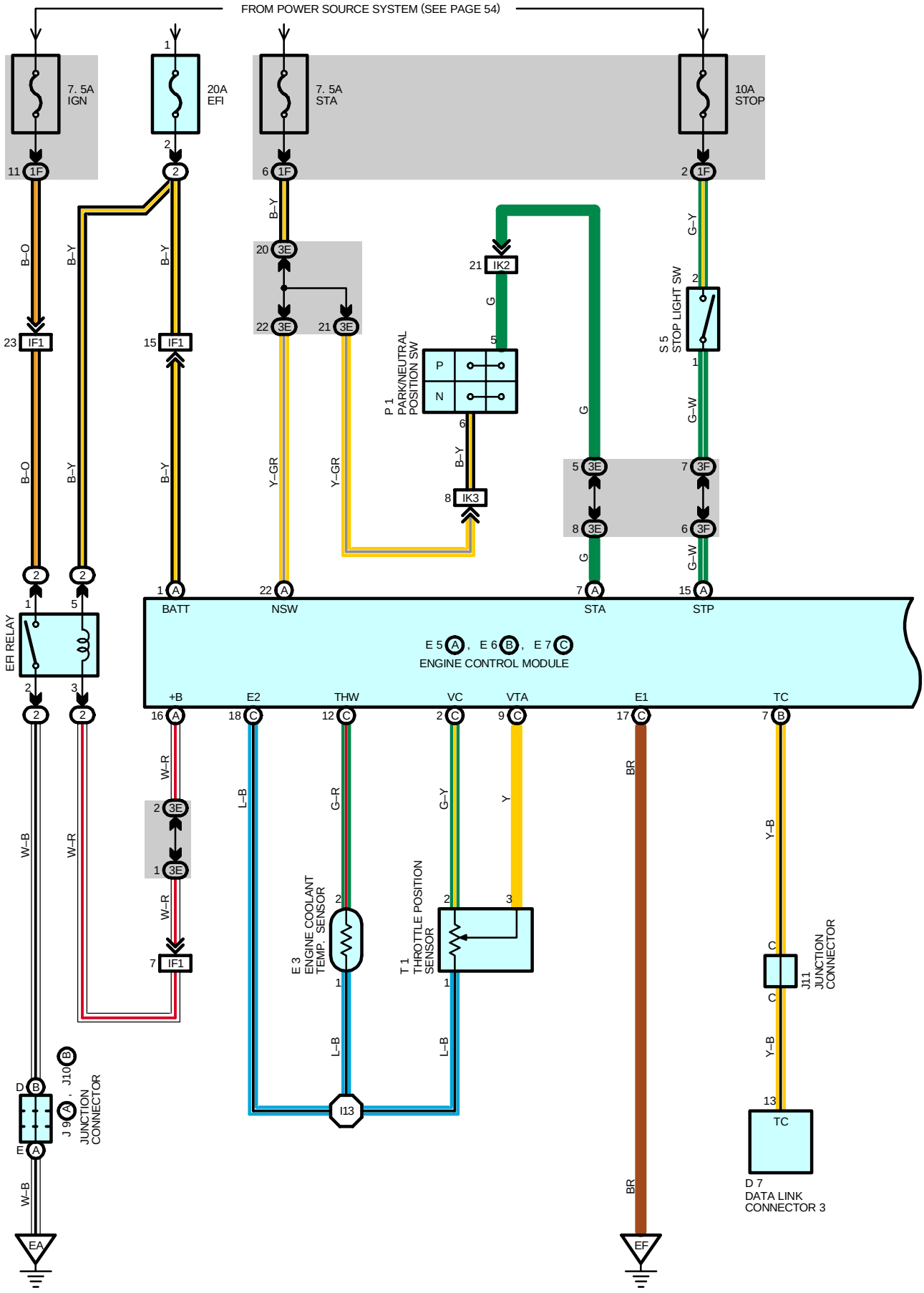
FROM POWER SOURCE SYSTEM (SEE PAGE 54)
7. 5A IGN
20A EFI
7. 5A STA
10A STOP
B–O
B–Y
Y–GR
G
G–Y
G–W
W–B
W–R
L–B
G–R
G–Y
Y
BR
Y–B
P 1 PARK/NEUTRAL POSITION SW
S 5 STOP LIGHT SW
E/R RELAY
BATT
NSW
STA
STP
E 5 (A), E 6 (B), E 7 (C)
ENGINE CONTROL MODULE
+B
E2
THW
VC
VTA
E1
TC
E 3 ENGINE COOLANT TEMP. SENSOR
T 1 THROTTLE POSITION SENSOR
J 9 (A), J10 (B) JUNCTION CONNECTOR
J11 JUNCTION CONNECTOR
D 7 DATA LINK CONNECTOR 3
I13
EA
EF

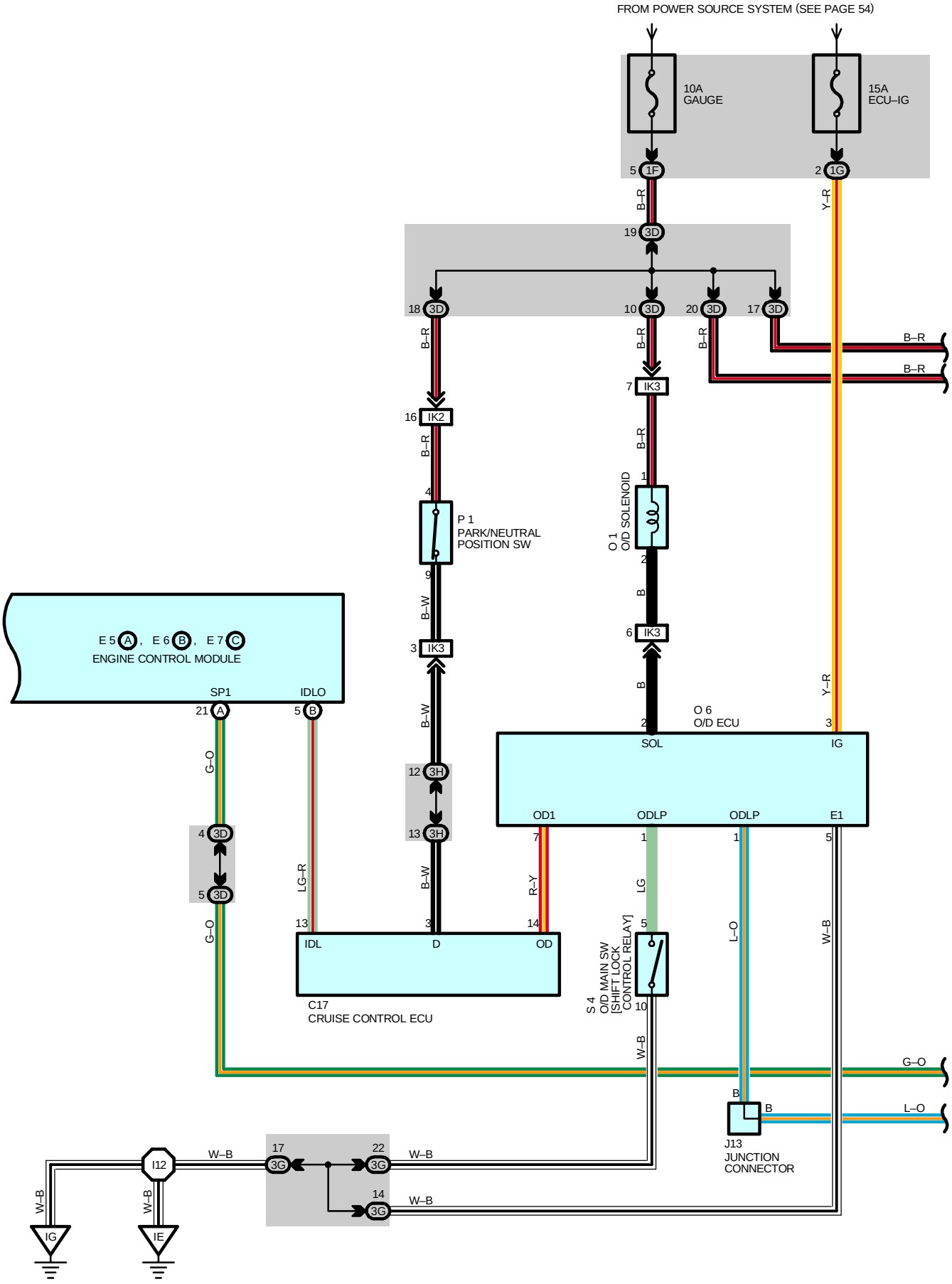
FROM POWER SOURCE SYSTEM (SEE PAGE 54)
10A
GAUGE
15A
ECU–IG
5 1F
2 1G
B–R
Y–R
19 3D
18 3D
10 3D
20 3D
17 3D
B–R
B–R
B–R
B–R
7 IK3
16 IK2
B–R
B–R
1
4
P 1
PARK/NEUTRAL
POSITION SW
O 1
O/D SOLENOID
2
B
6 IK3
B
2
O 6
O/D ECU
Y–R
3
SOL
IG
E 5 A , E 6 B , E 7 C
ENGINE CONTROL MODULE
SP1
IDLO
21 A
5 B
B–W
9
3 IK3
B–W
12 3H
13 3H
G–O
4 3D
5 3D
G–O
LG–R
B–W
13
3
IDL
D
OD1
ODLP
ODLP
E1
7
1
1
5
R–Y
LG
L–O
W–B
14
OD
C17
CRUISE CONTROL ECU
S 4
O/D MAIN SW
[SHIFT LOCK
CONTROL RELAY]
5
10
W–B
G–O
B
B
L–O
J13
JUNCTION
CONNECTOR
I12
W–B
17 3G
22 3G
W–B
14 3G
W–B
W–B
W–B
IG
IE

* 1 : W/ TACHOMETER
* 2 : W/O TACHOMETER

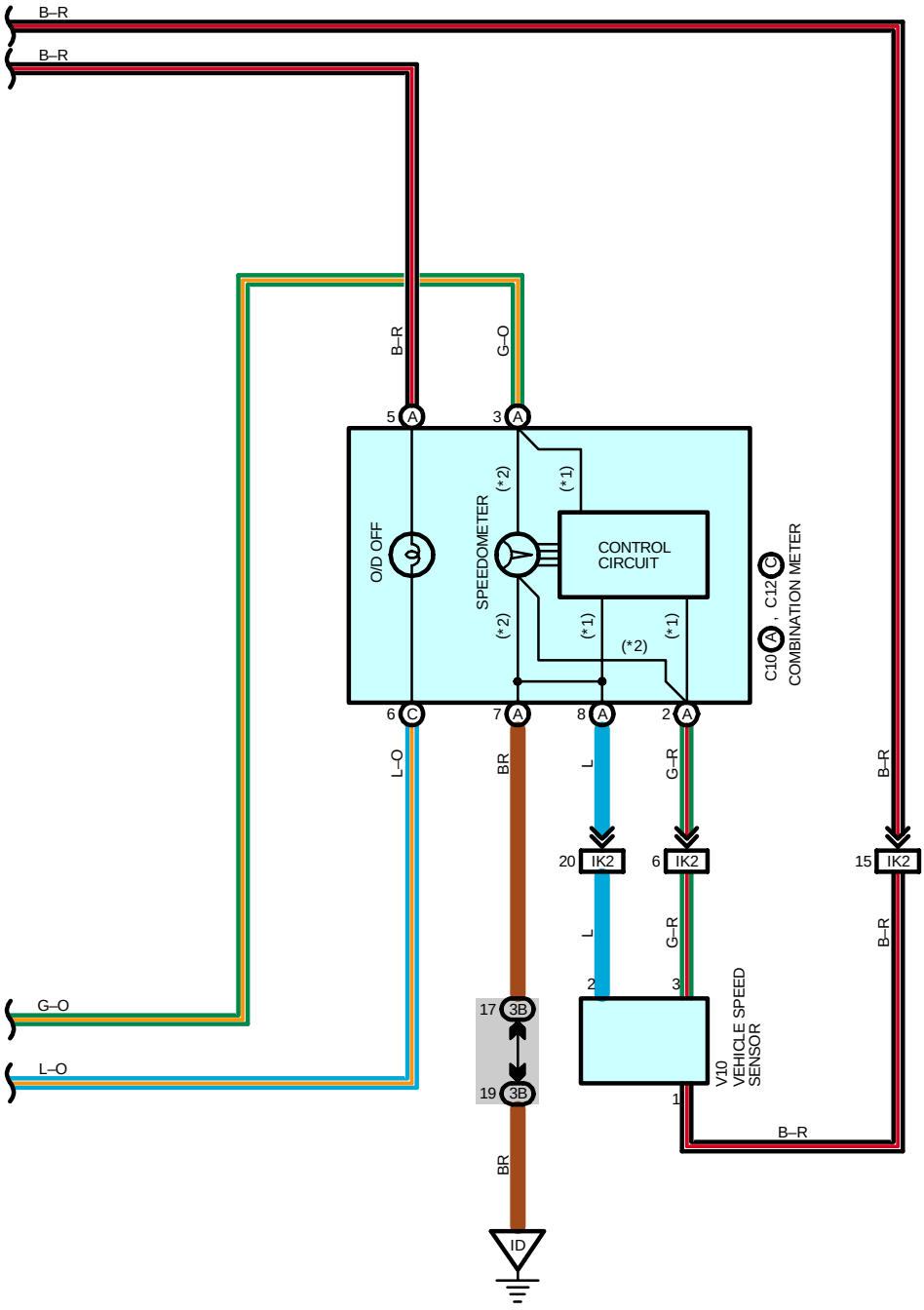

SERVICE HINTS

O6 O/D ECU

3–GROUND : Approx. **12** volts with ignition SW at **ON** position

5–GROUND : Always continuity

: PARTS LOCATION

Code		See Page	Code		See Page	Code	See Page
C10	A	34	E7	C	35	P1	33 (2RZ–FE)
C12	C	34	J9	A	33 (2RZ–FE)	S4	35
C17		34	J10	B	33 (2RZ–FE)	S5	35
D7		34	J11		35	T1	33 (2RZ–FE)
E3		32 (2RZ–FE)	J13		35	V10	33 (2RZ–FE)
E5	A	35	O1		33 (2RZ–FE)		
E6	B	35	O6		35		

: RELAY BLOCKS

Code	See Page	Relay Blocks (Relay Block Location)
2	21	R/B No.2 (Engine Compartment Left)

: JUNCTION BLOCK AND WIRE HARNESS CONNECTOR

Code	See Page	Junction Block and Wire Harness (Connector Location)
1F	23	Cowl Wire and J/B No.1 (Lower Finish Panel)
1G		
3B	24	Cowl Wire and J/B No.3 (Behind the Instrument Panel Left)
3D		
3E		
3F		
3G	26	Cowl Wire and J/B No.3 (Behind the Instrument Panel Center)
3H		

: CONNECTOR JOINING WIRE HARNESS AND WIRE HARNESS

Code	See Page	Joining Wire Harness and Wire Harness (Connector Location)
IF1	44	Engine Room Main Wire and Cowl Wire (Left Kick Panel)
IK2	44	Engine Wire and Cowl Wire (Above the Glove Box)
IK3		

: GROUND POINTS

Code	See Page	Ground Points Location
EA	42 (2RZ–FE)	Front Left Fender
EF	42 (2RZ–FE)	Ignition Coil Braket
ID	44	Left Kick Panel
IE	44	Around the Right Edge of the Reinforcement
IG	44	Around the Left Edge of the Reinforcement

: SPLICE POINTS

Code	See Page	Wire Harness with Splice Points	Code	See Page	Wire Harness with Splice Points
I11	44	Cowl Wire	I13	44	Engine Wire
I12					

CRUISE CONTROL (EXCEPT 5VZ–FE 2WD M/T, 3RZ–FE AND 2RZ–FE)

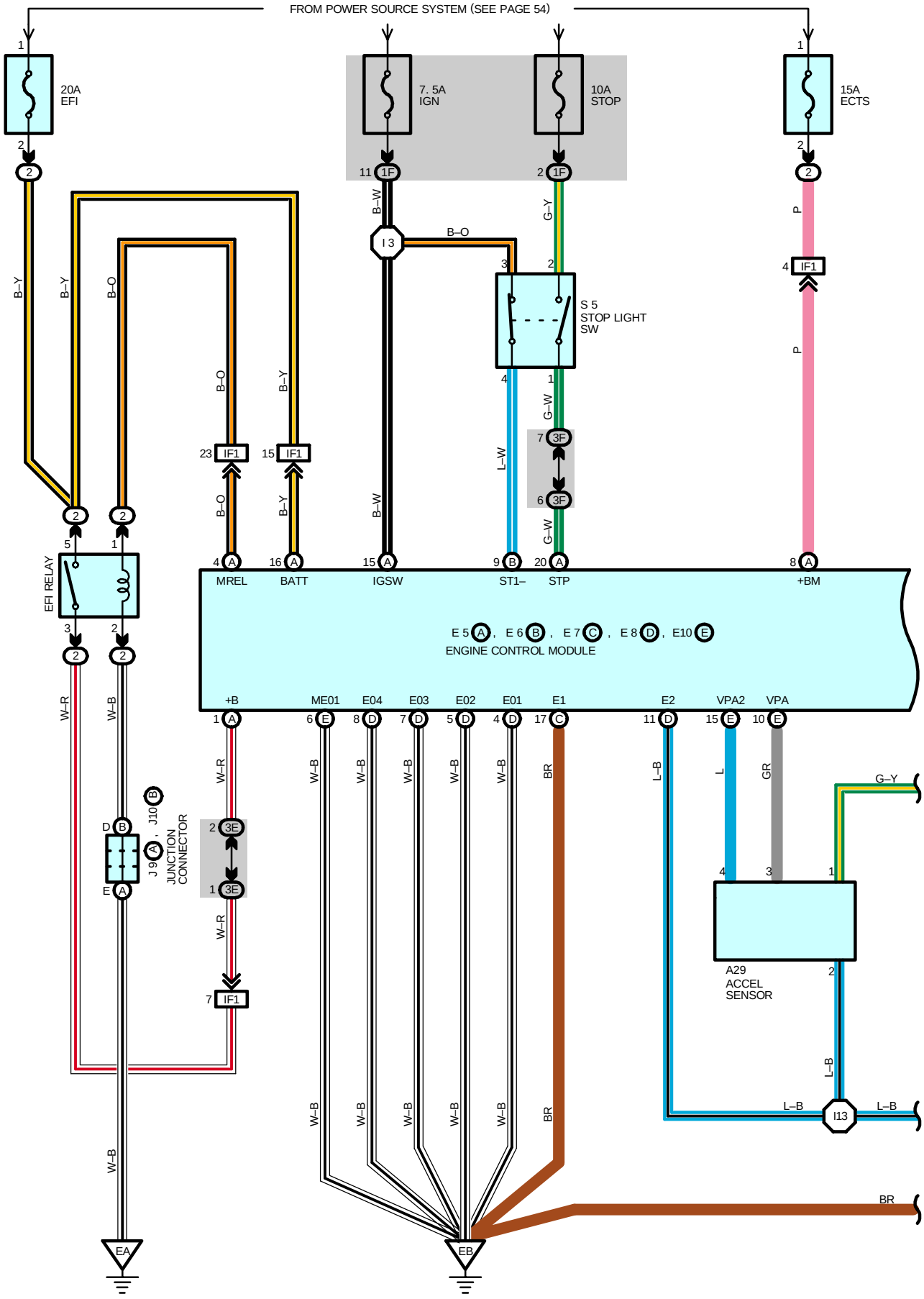

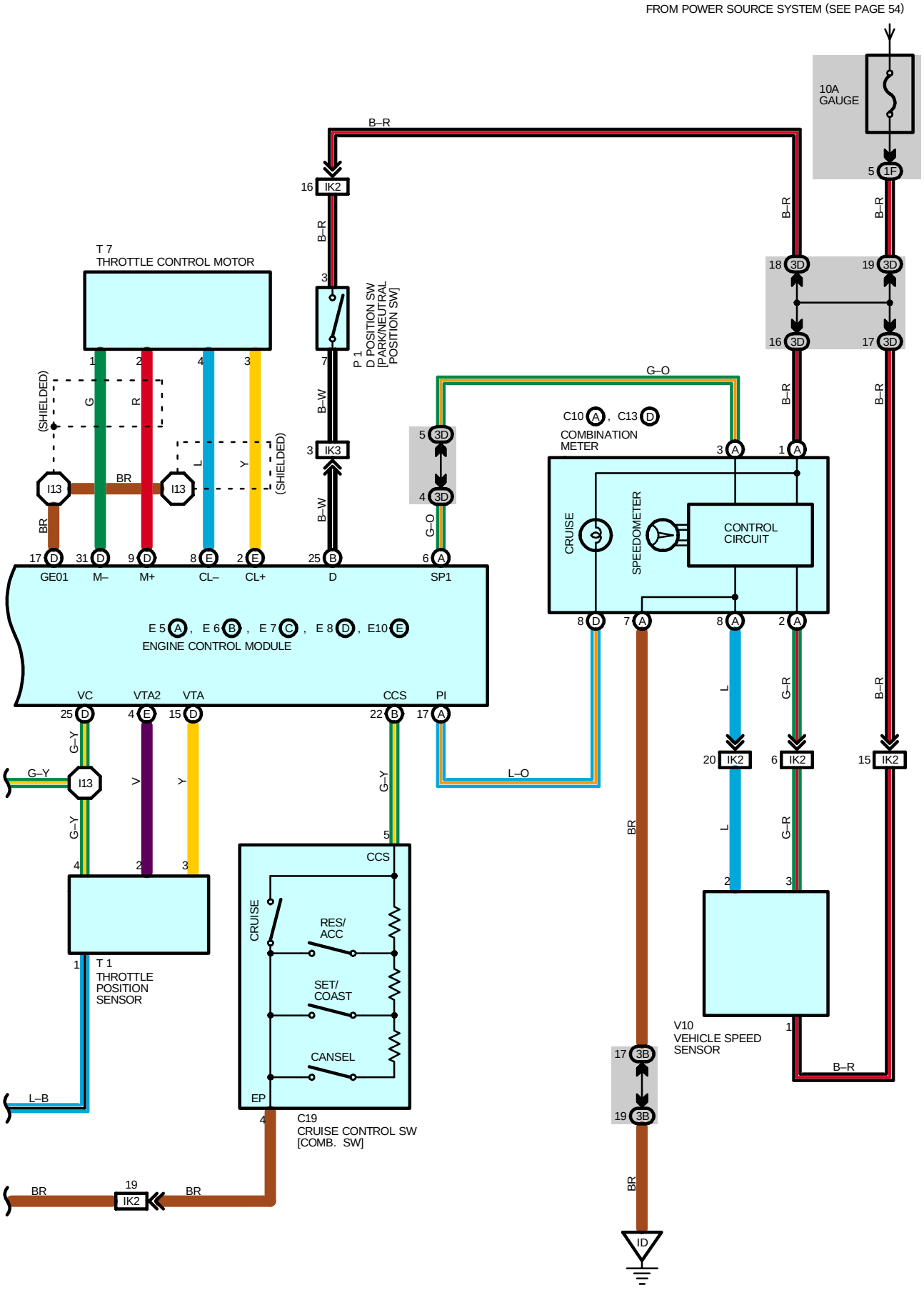
FROM POWER SOURCE SYSTEM (SEE PAGE 54)
10A
GAUGE
5 1F
B–R
16 IK2
B–R
3
P 1
D POSITION SW
[PARK/NEUTRAL
POSITION SW]
7
B–W
3 IK3
B–W
25 B
D
T 7
THROTTLE CONTROL MOTOR
1
2
4
3
(SHIELDED)
G
R
L
Y
(SHIELDED)
I13
BR
I13
BR
17 D
GE01
31 D
M–
9 D
M+
8 E
CL–
2 E
CL+
5 3D
4 3D
G–O
6 A
SP1
G–O
C10 A , C13 D
COMBINATION
METER
3 A
1 A
B–R
18 3D
16 3D
B–R
19 3D
17 3D
B–R
CRUISE
SPEEDOMETER
CONTROL
CIRCUIT
E 5 A , E 6 B , E 7 C , E 8 D , E10 E
ENGINE CONTROL MODULE
8 D
7 A
8 A
2 A
VC
VTA2
VTA
CCS
PI
25 D
4 E
15 D
22 B
17 A
L
G–R
B–R
20 IK2
6 IK2
15 IK2
L–O
G–Y
G–Y
I13
G–Y
V
Y
G–Y
5
CCS
4
2
3
CRUISE
RES/
ACC
SET/
COAST
CANSEL
EP
4
C19
CRUISE CONTROL SW
[COMB. SW]
1
T 1
THROTTLE
POSITION
SENSOR
L–B
BR
19
IK2
BR
BR
17 3B
19 3B
BR
ID
2
3
1
V10
VEHICLE SPEED
SENSOR
B–R

CRUISE CONTROL (EXCEPT 5VZ–FE 2WD M/T, 3RZ–FE AND 2RZ–FE)

SYSTEM OUTLINE

The cruise control system is a constant vehicle speed controller which controls the opening angle of the engine throttle valve by the SW, and allows driving at a constant speed without depressing the accelerator pedal.

SET CONTROL

When the SET/COAST SW is operated while traveling with the main SW on, the speed when the SET/COAST SW is operated to off is memorized, and the vehicle speed is controlled at that speed.

COAST CONTROL

When the SET/COAST SW is operated to on, the cruise control opening angle requirement is turned to 0 to decrease the vehicle speed, and the speed when the SET/COAST SW is operated to off is memorized, and the vehicle speed is controlled at that speed.

Furthermore, every time the SET/COAST SW is operated momentarily (Approx. 0.5 sec.) to on, the memorized vehicle speed is decreased by approx. 1.6 km/h (1.0 mph).

ACCEL CONTROL

When the RES/ACC SW is operated to on, the throttle motor rotates the throttle valve to open direction to increase the vehicle speed, and the speed when the RES/ACC SW is operated to off is memorized, and the vehicle speed is controlled at that speed.

Furthermore, every time the RES/ACC SW is operated momentarily (Approx. 0.5 sec.) to on, the memorized vehicle speed is increased by approx. 1.6 km/h (1.0 mph).

MANUAL CANCEL MECHANISM

If any of the following signals are input during cruise control traveling, the current to the motor flows in the direction to close the throttle valve, and cancel the cruise control.

(1) Stop lamp SW is on (Brake pedal is depressed)

(2) The CANCEL SW of the control SW is on

(3) CRUISE SW is off

RESUME CONTROL

After canceling the cruise control (Except when the main SW is off) if the vehicle speed is above the minimum speed limit (Approx. 40km/h, 25mph), operating the RES/ACC SW to on from off will cause the system to accelerate and resume to the vehicle speed before manual cancellation.

OVERDRIVE FUNCTION

The overdrive may be cut on an uphill grade, while traveling with the cruise control.

After the overdrive is cut, if the vehicle speed reaches the overdrive resume speed (Set speed minus 2 km/h (1.2 mph)), and if the system determines that the uphill grade has finished, the overdrive will resume after the overdrive timer operation.

AUTO CANCEL OPERATION

If any of the following conditions are detected, the set speed is erased and the control is canceled.

(1) Disconnection and/or short in the stop light SW

(2) Malfunction in the vehicle speed signal

(3) Malfunction in the electronic throttle parts

(4) Malfunction in the stop light SW input circuit

(5) Malfunction in the cancel circuit

(6) The actual vehicle speed becomes slower than the minimum speed limit

(7) The actual vehicle speed becomes –16 km/h (10 mph) slower than the set speed

SERVICE HINTS

E5 (A), E6 (B), E7 (C), E8 (D), E10 (E) ENGINE CONTROL MODULE

Voltage at engine control module wiring connectors

+B–E1 : **9**–**14** volts (Ignition SW on)
BATT–E1 : **9**–**14** volts (Always)
VC–E2 : **4.5**–**5.5** volts (Ignition SW on)
VTA–E2 : **0.3**–**0.8** volts (Ignition SW on and throttle valve fully closed)
3.2–**4.9** volts (Ignition SW on and throttle valve fully open)
SP1–E1 : Pulse generation with vehicle moving
STP–E1 : **7.5**–**14** volts (Stop light SW on)

C19 CRUISE CONTROL SW [COMB. SW]

5–4 : Approx. **68** Ω with RESUME/ACCEL SW on
Approx. **198** Ω with SET/COAST SW on
Approx. **418** Ω with CANCEL SW on

S5 STOP LIGHT SW

2–1 : Closed with brake pedal depressed
3–4 : Opened with brake pedal depressed

: PARTS LOCATION

Code		See Page	Code		See Page	Code	See Page
C10	A	34	E8	D	35	P1	33 (3RZ–FE, 2RZ–FE)
C13	D	34	J9	A	31 (5VZ–FE)	S5	35
C19		34			33 (3RZ–FE, 2RZ–FE)	T1	31 (5VZ–FE)
E5	A	35	J10	B	31 (5VZ–FE)		33 (3RZ–FE, 2RZ–FE)
E6	B	35			33 (3RZ–FE, 2RZ–FE)	V10	31 (5VZ–FE)
E7	C	35	P1		31 (5VZ–FE)		33 (3RZ–FE, 2RZ–FE)

: RELAY BLOCKS

Code	See Page	Relay Blocks (Relay Block Location)
2	21	R/B No.2 Engine Compartment Left

: JUNCTION BLOCK AND WIRE HARNESS CONNECTOR

Code	See Page	Junction Block and Wire Harness (Connector Location)
1F	23	Cowl Wire and J/B No.1 Lower Finish Panel
3B	26	Cowl Wire and J/B No.3 Behind the Instrument Panel Left
3D		
3E		
3F		

: CONNECTOR JOINING WIRE HARNESS AND WIRE HARNESS

Code	See Page	Joining Wire Harness and Wire Harness (Connector Location)
IF1	44	Engine Room Main Wire and Cowl Wire Left Kick Panel
IK2	44	Engine Wire and Cowl Wire Above the Glove Box
IK3	44	Engine Wire and Cowl Wire Abova the Glove Box

: GROUND POINTS

Code	See Page	Ground Points Location
EA	40 (5VZ–FE)	Front Left Fender
	42 (3RZ–FE, 2RZ–FE)	
EB	40 (5VZ–FE)	Near the Throttle Body
	42 (3RZ–FE, 2RZ–FE)	Under the Data Link Connector 1
ID	44	Left Kick Panel

CRUISE CONTROL (EXCEPT 5VZ–FE 2WD M/T, 3RZ–FE AND 2RZ–FE)



: SPLICE POINTS

Code	See Page	Wire Harness with Splice Points	Code	See Page	Wire Harness with Splice Points
I3	44	Cowl Wire	I13	44	Engine Wire

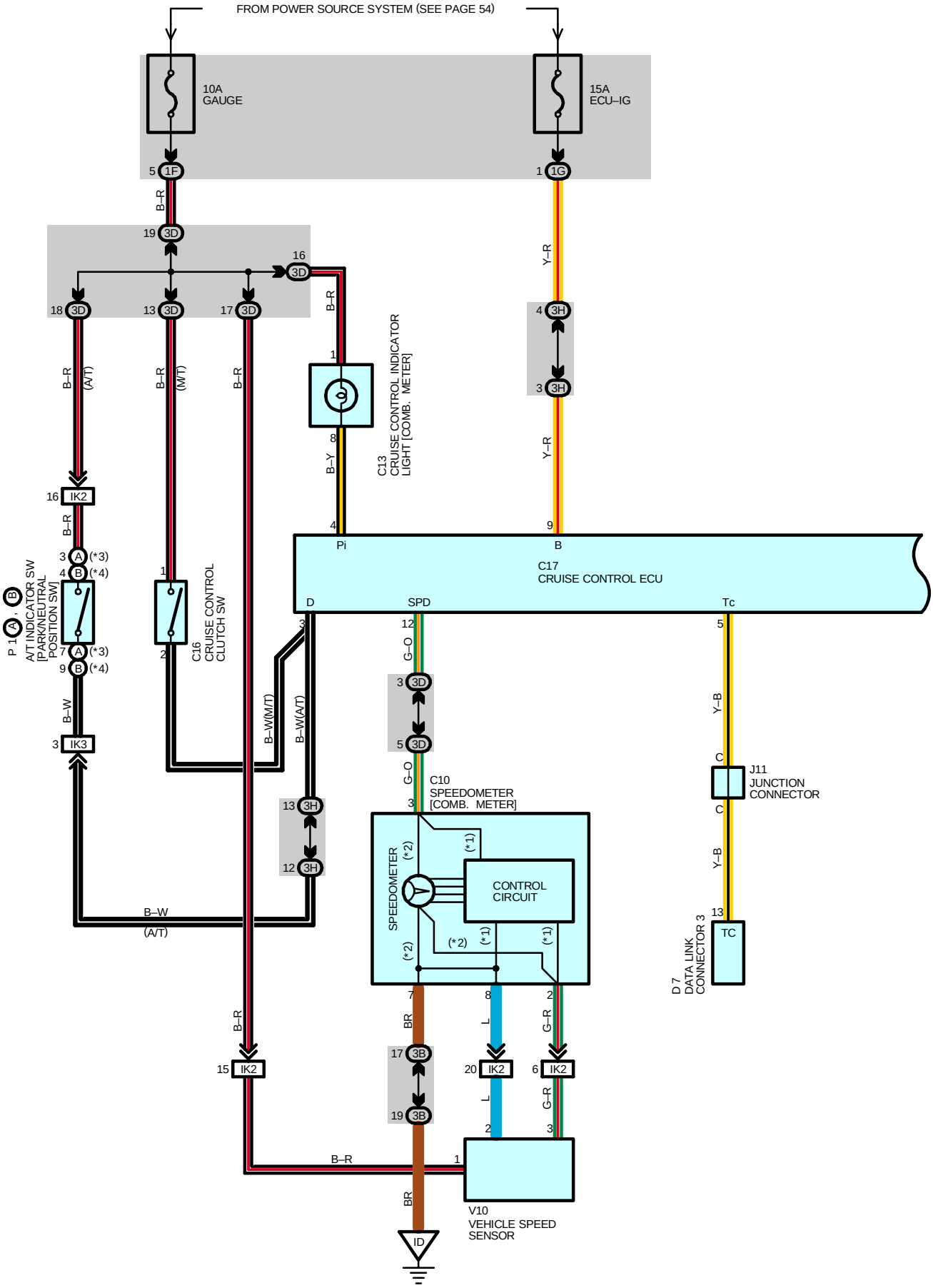
FROM POWER SOURCE SYSTEM (SEE PAGE 54)
10A
GAUGE
15A
ECU–IG
5 1F
1 1G
B–R
19 3D
16 3D
18 3D
13 3D
17 3D
Y–R
4 3H
3 3H
B–R (A/T)
B–R (M/T)
B–R
1
8
B–Y
C13
CRUISE CONTROL INDICATOR LIGHT [COMB. METER]
Y–R
16 IK2
B–R
4
9
Pi
B
C17
CRUISE CONTROL ECU
3 A (*3)
4 B (*4)
7 A (*3)
9 B (*4)
P 1 A, B
A/T INDICATOR SW [PARK/NEUTRAL POSITION SW]
B–W
3 IK3
1
2
C16
CRUISE CONTROL CLUTCH SW
B–W(M/T)
B–W(A/T)
D
SPD
Tc
3
12
G–O
3 3D
5 3D
G–O
C10
SPEEDOMETER [COMB. METER]
3
5
Y–B
C
J11
JUNCTION CONNECTOR
C
Y–B
13
TC
D 7
DATA LINK CONNECTOR 3
13 3H
12 3H
B–W
(A/T)
SPEEDOMETER
(*2)
(*1)
CONTROL CIRCUIT
(*2)
(*1)
(*1)
(*2)
7
8
2
BR
L
G–R
B–R
15 IK2
17 3B
20 IK2
6 IK2
L
G–R
19 3B
2
3
B–R
1
BR
V10
VEHICLE SPEED SENSOR
ID

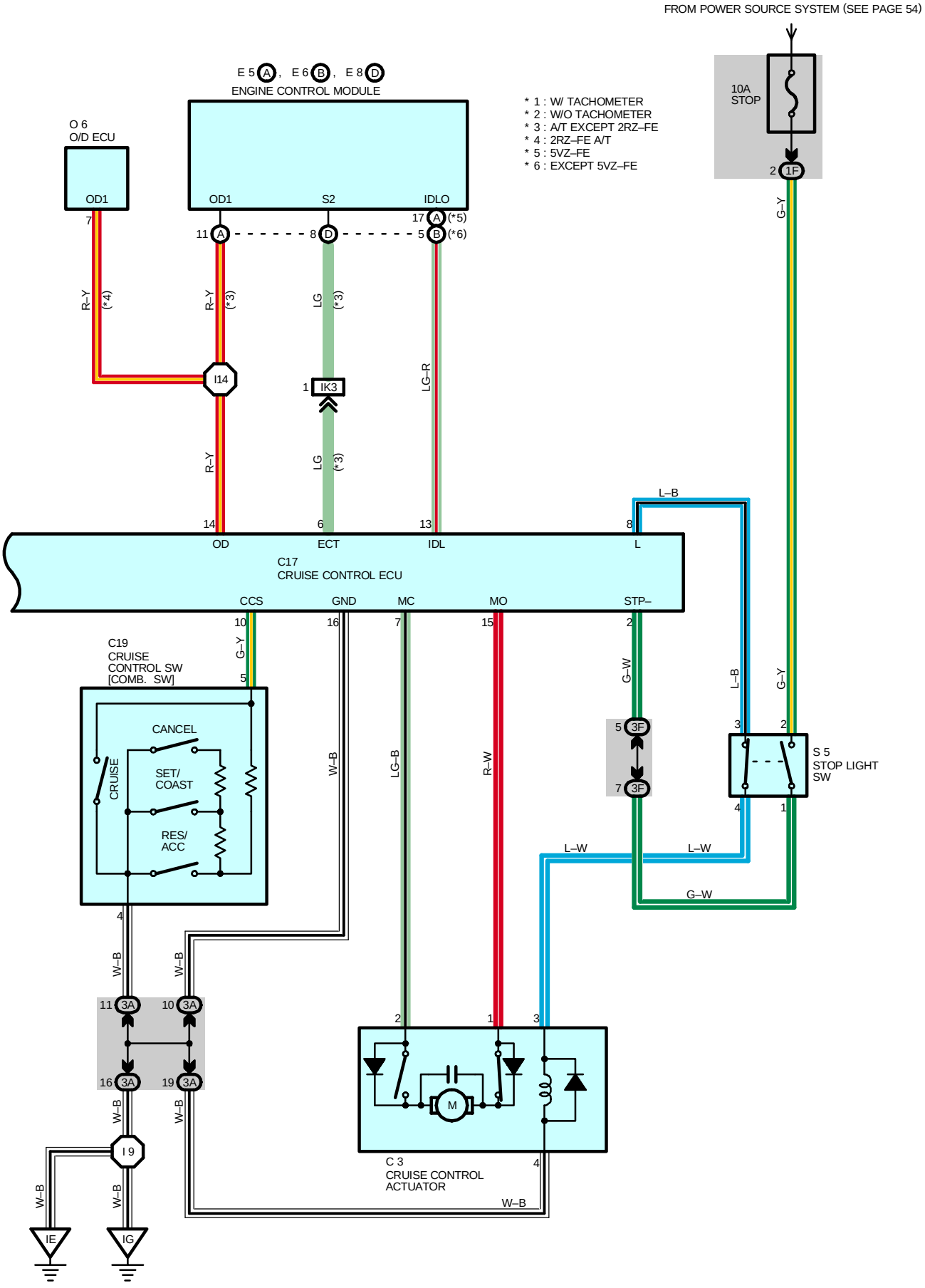
FROM POWER SOURCE SYSTEM (SEE PAGE 54)
10A
STOP
2
1F
G–Y
E 5 A , E 6 B , E 8 D
ENGINE CONTROL MODULE
* 1 : W/ TACHOMETER
* 2 : W/O TACHOMETER
* 3 : A/T EXCEPT 2RZ–FE
* 4 : 2RZ–FE A/T
* 5 : 5VZ–FE
* 6 : EXCEPT 5VZ–FE
O 6
O/D ECU
OD1
7
OD1
S2
IDLO
17 A (*5)
11 A
8 D
5 B (*6)
R–Y (*4)
R–Y (*3)
LG (*3)
LG–R
I14
1 IK3
R–Y
LG (*3)
14
6
13
8
L–B
OD
ECT
IDL
L
C17
CRUISE CONTROL ECU
CCS
GND
MC
MO
STP–
10
16
7
15
2
G–Y
5
G–W
L–B
G–Y
C19
CRUISE
CONTROL SW
[COMB. SW]
CANCEL
CRUISE
SET/
COAST
RES/
ACC
W–B
LG–B
R–W
5 3F
7 3F
3
2
S 5
STOP LIGHT
SW
4
1
L–W
L–W
G–W
4
W–B
W–B
11 3A
10 3A
16 3A
19 3A
2
1
3
M
W–B
W–B
I 9
C 3
CRUISE CONTROL
ACTUATOR
4
W–B
W–B
W–B
IE
IG

CRUISE CONTROL (5VZ–FE 2WD M/T, 3RZ–FE AND 2RZ–FE)

SYSTEM OUTLINE

With the ignition SW turned to on, current flows from GAUGE fuse to TERMINAL 1 of the cruise control indicator light and from ECU–IG fuse to TERMINAL B of the cruise control ECU. When the ignition SW is on and the cruise control SW is turned on, a signal is input from TERMINAL 5 of the cruise control SW to TERMINAL CCS of the cruise control ECU. As a result, the cruise control ECU functions and the current to TERMINAL B of the cruise control ECU flows to TERMINAL GND to GROUND, and the cruise control system is ready for operation.
At the same time, the current from the GAUGE fuse flows to TERMINAL 1 of the cruise control indicator light to TERMINAL 8 to TERMINAL Pi of the cruise control ECU to TERMINAL GND to GROUND, causing the cruise control indicator light to light up, indicating that the cruise control is ready for operation.

1. SET OPERATION

When the cruise control main SW is turned on and the set SW is pushed with the vehicle speed within the set limit (Approx. 40 km/h, 25 mph to 200 km/h, 124 mph), a signal is input to TERMINAL CCS of the cruise control ECU and the vehicle speed at the time the set SW is released is memorized in the ECU as the set speed.

2. SET SPEED CONTROL

During cruise control driving, the ECU compares the set speed memorized in the ECU with the actual vehicle speed input into TERMINAL SPD of the cruise control ECU from the speedometer, and controls the cruise control actuator to maintain the set speed.
When the actual vehicle speed is lower than the set speed, the ECU causes the current to the cruise control actuator to flow from TERMINAL MO of the cruise control ECU to TERMINAL 1 of the cruise control actuator to TERMINAL 2 to TERMINAL MC of the cruise control ECU. As a result, the motor in the cruise control actuator is rotated to open the throttle valve and the throttle cable is pulled to increase the vehicle speed.
When the actual vehicle speed is higher than the set speed, the current to the cruise control actuator flows from TERMINAL MC of the ECU to TERMINAL 2 of the cruise control actuator to TERMINAL 1 to TERMINAL MO of the cruise control ECU. This causes the motor in the cruise control actuator to rotate to close the throttle valve and return the throttle cable to decrease the vehicle speed.

3. COAST CONTROL

During cruise control driving, while the coast SW is on, the cruise control actuator returns the throttle cable to close the throttle valve and decrease the driving speed. The vehicle speed when the coast SW is turned off is memorized and the vehicle continues at the new set speed.

4. ACCEL CONTROL

During cruise control driving, while the accel SW is turned on, the cruise control actuator pulls the throttle cable to open the throttle valve and increase the driving speed.
The vehicle speed when the accel SW is turned off is memorized and the vehicle continues at the new set speed.

5. RESUME CONTROL

Unless the vehicle speed falls below the minimum speed limit (Approx. 45 km/h, 25 mph) after canceling the set speed by the cancel SW, pushing the resume SW will cause the vehicle to resume the vehicle speed set before cancellation.

6. MANUAL CANCEL MECHANISM

If any of the following operations occurs during cruise control operation, the magnetic clutch of the actuator turns off and the motor rotates to close the throttle valve and the cruise control is released.

- Placing the shift lever in except D position (A/T) or cruise control clutch SW off (M/T). ”A Signal is not input to TERMINAL D of the ECU”
- Depressing the brake pedal (Stop light SW on). ”A Signal is input to TERMINAL STP– of the ECU”
- Pushing the cancel SW (Cancel SW on). ”A Signal is input to TERMINAL CCS of the ECU”

7. AUTO CANCEL FUNCTION

A) If any of the following operating conditions occurs during cruise control operation, the set speed is erased, the current flowing to the magnetic clutch is stopped and the cruise control is released (Cruise SW turns off).
When this occurs, the ignition SW must be turned off once before the main SW will turn on.

* Over current to transistor driving motor and/or magnetic clutch.
* Current to control the throttle valve in motor becomes always ON.
* Open circuit in magnetic clutch.
* Momentary interruption of vehicle speed signal
* Short circuit in cruise control SW.
* Motor does not operate despite the motor drive signal being output.

B) If any of the following conditions occurs during cruise control operation, the set speed is erased and the cruise control is released. (The power of magnetic clutch is cut off until the set SW is ON again.)

* When the vehicle speed falls below the minimum speed limit (approx. 40 km/h, 25 mph)
* When the vehicle speed falls more than 16 km/h (10 mph) below the set speed, E.G. on an upward slope.
* When power to the cruise control system is momentarily cut off.

C) If any of the following condition occurs during cruise control operation, the cruise control is released. But in this case, the set speed is not erased. If the vehicle speed is more than the minimum speed limit (Approx. 40 km/h, 25 mph), cruise control operation is possible using SET or RESUME on the control SW.

* Open circuit between TERMINAL L of the cruise control ECU and TERMINAL 3 of the stop light SW.

SERVICE HINTS

C17 CRUISE CONTROL ECU

16–GROUND : Always continuity
9–GROUND : Approx. **12** volts with ignition SW at **ON** position
12–GROUND : **4** pulse with **1** rotation of the rotor shaft
2–GROUND : Approx. **12** volts with brake pedal depressed (One of the cancel SW)

C19 CRUISE CONTROL SW [COMB. SW]

5–4 : Approx. **68** Ω with RESUME/ACCEL SW on
Approx. **198** Ω with SET/COAST SW on
Approx. **418** Ω with CANCEL SW on

C3 CRUISE CONTROL ACTUATOR

3–4 : Approx. **38.5** Ω

: PARTS LOCATION

Code	See Page	Code		See Page	Code		See Page
C3	30 (5VZ–FE)	D7		34	P1	A	33 (3RZ–FE)
	32 (3RZ–FE, 2RZ–FE)	E5	A	35		B	33 (2RZ–FE)
C10	34	E6	B	35	S5		35
C13	34	E8	D	35	V10		31 (5VZ–FE)
C16	34	J11		35			33 (3RZ–FE, 2RZ–FE)
C17	34	O6		35			
C19	34	P1	A	31 (5VZ–FE)			

: JUNCTION BLOCK AND WIRE HARNESS CONNECTOR

Code	See Page	Junction Block and Wire Harness (Connector Location)
1F	23	Cowl Wire and J/B No.1 (Lower Finish Panel)
1G		
3A	24	Cowl Wire and J/B No.3 (Behind the Instrument Panel Left)
3B		
3D		
3F		
3H	26	Cowl Wire and J/B No.3 (Behind the Instrument Panel Center)

CRUISE CONTROL (5VZ–FE 2WD M/T, 3RZ–FE AND 2RZ–FE)

: CONNECTOR JOINING WIRE HARNESS AND WIRE HARNESS

Code	See Page	Joining Wire Harness and Wire Harness (Connector Location)
IK2	44	Engine Wire and Cowl Wire (Above the Glove Box)
IK3		

: GROUND POINTS

Code	See Page	Ground Points Location
ID	44	Left Kick Panel
IE	44	Around the Right Edge of the Reinforcement
IG	44	Around the Left Edge of the Reinforcement

: SPLICE POINTS

Code	See Page	Wire Harness with Splice Points	Code	See Page	Wire Harness with Splice Points
I9	44	Cowl Wire	I14	44	Cowl Wire

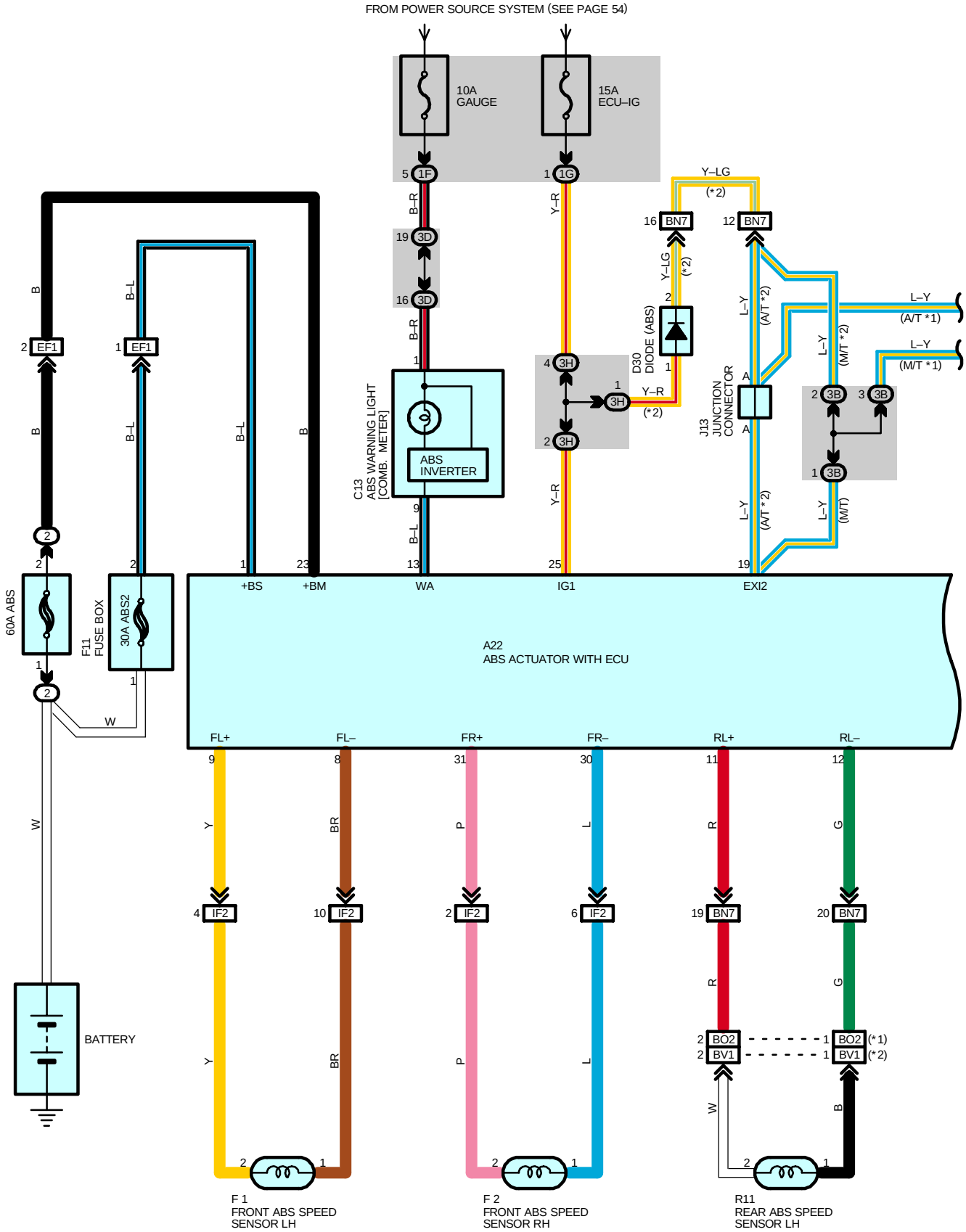
FROM POWER SOURCE SYSTEM (SEE PAGE 54)
10A GAUGE
15A ECU–IG
5 1F
1 1G
B–R
Y–R
19 3D
16 3D
B–R
1
C13 ABS WARNING LIGHT [COMB. METER]
ABS INVERTER
9
B–L
13
4 3H
1 3H
2 3H
Y–R
25
Y–R
D30 DIODE (ABS)
Y–R (*2)
Y–LG (*2)
16 BN7
12 BN7
Y–LG (*2)
J13 JUNCTION CONNECTOR
A
A
L–Y (A/T *2)
L–Y (A/T *1)
L–Y (M/T *2)
L–Y (M/T *1)
2 3B
3 3B
1 3B
L–Y (A/T *2)
L–Y (M/T)
19
B
B–L
B–L
B
2 EF1
1 EF1
2
2
1
23
+BS
+BM
WA
IG1
EXI2
60A ABS
F11 FUSE BOX
30A ABS2
1
2
1
W
A22
ABS ACTUATOR WITH ECU
FL+
FL–
FR+
FR–
RL+
RL–
9
8
31
30
11
12
Y
BR
P
L
R
G
4 IF2
10 IF2
2 IF2
6 IF2
19 BN7
20 BN7
R
G
2 BO2
2 BV1
1 BO2 (*1)
1 BV1 (*2)
W
B
W
BATTERY
Y
BR
P
L
2
1
F 1
FRONT ABS SPEED SENSOR LH
F 2
FRONT ABS SPEED SENSOR RH
R11
REAR ABS SPEED SENSOR LH

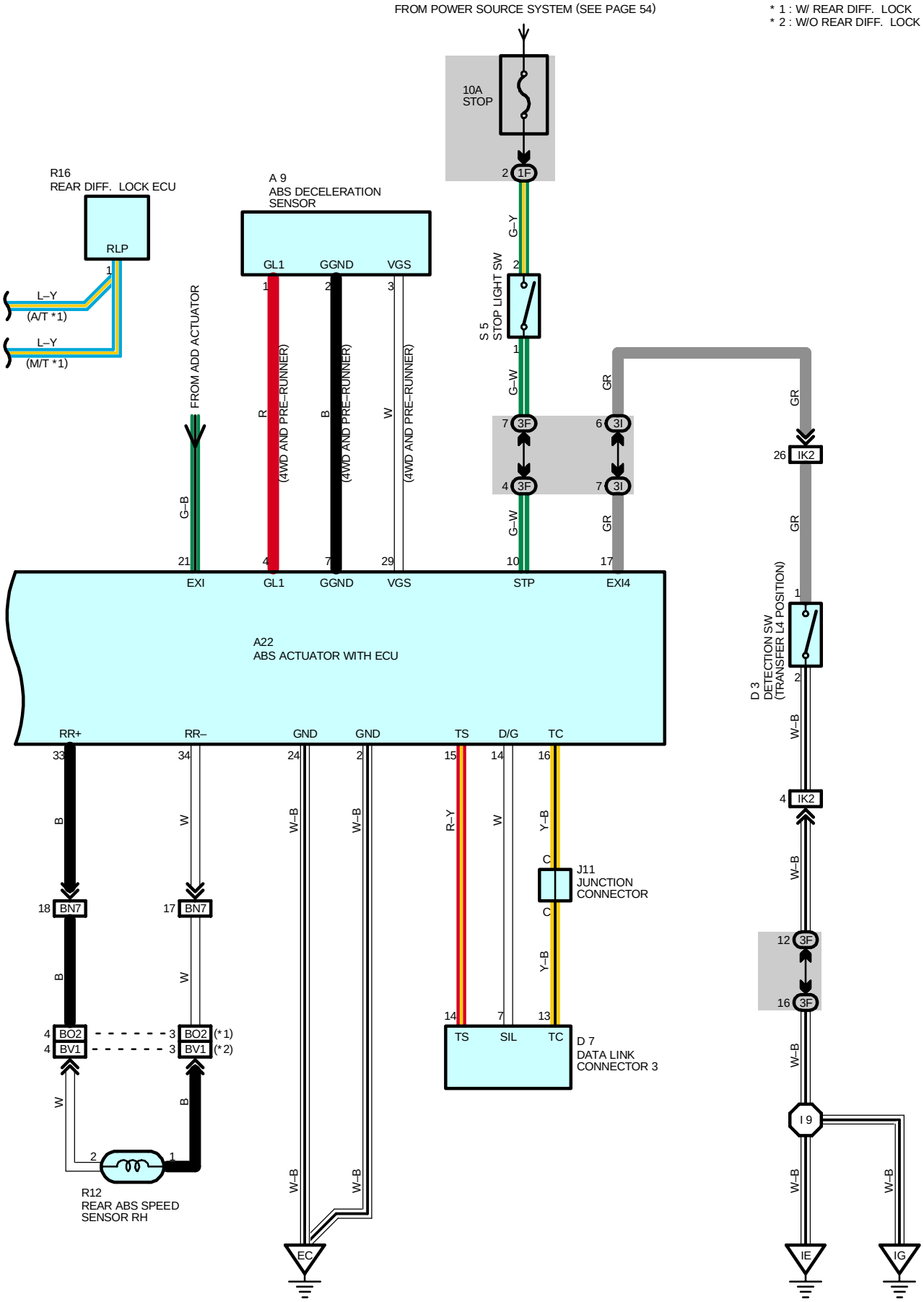
FROM POWER SOURCE SYSTEM (SEE PAGE 54)
* 1 : W/ REAR DIFF. LOCK
* 2 : W/O REAR DIFF. LOCK
10A
STOP
2 1F
G–Y
S 5
STOP LIGHT SW
2
1
G–W
7 3F
4 3F
G–W
10
6 3I
7 3I
GR
GR
GR
26 IK2
GR
17
D 3
DETECTION SW
(TRANSFER L4 POSITION)
1
2
W–B
4 IK2
W–B
12 3F
16 3F
W–B
I 9
W–B
W–B
IE
IG
R16
REAR DIFF. LOCK ECU
RLP
1
L–Y
(A/T *1)
L–Y
(M/T *1)
A 9
ABS DECELERATION
SENSOR
GL1
GGND
VGS
1
2
3
FROM ADD ACTUATOR
G–B
21
R
4
(4WD AND PRE–RUNNER)
B
7
(4WD AND PRE–RUNNER)
W
29
(4WD AND PRE–RUNNER)
EXI
GL1
GGND
VGS
STP
EXI4
A22
ABS ACTUATOR WITH ECU
RR+
RR–
GND
GND
TS
D/G
TC
33
34
24
2
15
14
16
B
W
W–B
W–B
R–Y
W
Y–B
C
J11
JUNCTION
CONNECTOR
C
Y–B
18 BN7
17 BN7
B
W
4 BO2
4 BV1
3 BO2 (*1)
3 BV1 (*2)
14
7
13
TS
SIL
TC
D 7
DATA LINK
CONNECTOR 3
W
B
2
1
R12
REAR ABS SPEED
SENSOR RH
W–B
W–B
EC

SYSTEM OUTLINE

This system controls the respective brake fluid pressures acting on the disc brake cylinders of the right front wheel, left front wheel, and rear wheels when the brakes are applied in a panic stop so that the wheels do not lock.
This results in improved directional stability and steerability during panic braking.

1. INPUT SIGNAL

(1) Speed sensor signal
The speed of the wheels is detected and input to TERMINALS FL+, FR+, RL+ and RR+ of the ABS actuator with ECU.

(2) Stop light SW signal
A signal is input to TERMINAL STP of the ABS actuator with ECU when the brake pedal is depressed.

(3) Deceleration sensor signal
Longitudinal acceleration is detected and a signal is input to the ABS actuator with ECU.

2. SYSTEM OPERATION

During sudden braking, the ABS actuator with ECU which has signals input from each sensor lets the hydraulic pressure acting on each wheel cylinder escape to the reservoir.
The pump inside the ABS actuator with ECU is also operating at this time and it returns the brake fluid from the reservoir to the master cylinder, thus preventing locking of vehicle wheels.
If the ABS actuator with ECU judges that the hydraulic pressure acting on the wheel cylinder is insufficient, the current acting on the solenoid is controlled and the hydraulic pressure is increased.
Holding of the hydraulic pressure is also controlled by the ECU, by the same method as above, by repeated pressure reduction. Holding and increase are repeated to maintain vehicle stability and to improve steerability during sudden braking.

SERVICE HINTS

F1, F2 FRONT ABS SPEED SENSOR LH, RH
1–2 : **0.92**–**1.22** kΩ (**20**˚C, **68**˚F)

R11, R12 REAR ABS SPEED SENSOR LH, RH
1–2 : **0.89**–**1.29** kΩ (**20**˚C, **68**˚F)

A22 ABS ACTUATOR WITH ECU
6–GROUND : **10**–**14** volts with ignition SW on
24–GROUND : **10**–**14** volts with stop light SW on (Brake pedal depressed)
2, 18–GROUND : Always continuity

S5 STOP LIGHT SW
2–1 : Closed with brake pedal depressed

: PARTS LOCATION

Code	See Page	Code	See Page	Code	See Page
A9	34	F1	30 (5VZ–FE)	R11	37 (Except Double Cab)
A22	30 (5VZ–FE)		32 (3RZ–FE, 2RZ–FE)	R12	36 (Double Cab)
	32 (3RZ–FE, 2RZ–FE)	F2	30 (5VZ–FE)		37 (Except Double Cab)
C13	34		32 (3RZ–FE, 2RZ–FE)	R16	35
D3	30 (5VZ–FE)	J11	35	S5	35
	32 (3RZ–FE, 2RZ–FE)	J13	35		
D30	34	R11	36 (Double Cab)		

: RELAY BLOCKS

Code	See Page	Relay Blocks (Relay Block Location)
2	21	R/B No.2 (Engine Compartment Left)

: JUNCTION BLOCK AND WIRE HARNESS CONNECTOR

Code	See Page	Junction Block and Wire Harness (Connector Location)
1F	23	Cowl Wire and J/B No.1 (Lower Finish Panel)
1G		
3B	24	Cowl Wire and J/B No.3 (Behind the Instrument Panel Left)
3D		
3F		
3H	26	Cowl Wire and J/B No.3 (Behind the Instrument Panel Center)
3I		

: CONNECTOR JOINING WIRE HARNESS AND WIRE HARNESS

Code	See Page	Joining Wire Harness and Wire Harness (Connector Location)
EF1	40 (5VZ–FE)	Cowl Wire and Engine Room Main Wire (Front Right Fender)
	42 (3RZ–FE, 2RZ–FE)	
IF2	44	Engine Room Main Wire and Cowl Wire (Left Kick Panel)
IK2	44	Engine Wire and Cowl Wire (Above the Glove Box)
BN7	46 (Double Cab)	Frame Wire and Cowl Wire (Under the Driver's Seat)
	48 (Except Double Cab)	
BO2	46 (Double Cab)	Frame Wire and Differential No.2 Wire (Rear Side Member LH)
	48 (Except Double Cab)	
BV1	48 (Except Double Cab)	Frame Wire and Skid Control Sensor Wire (Rear Side Member LH)

: GROUND POINTS

Code	See Page	Ground Points Location
EC	40 (5VZ–FE)	Front Right Fender
	42 (3RZ–FE, 2RZ–FE)	
IE	44	Around the Right Edge of the Reinforcement
IG	44	Around the Left Edge of the Reinforcement

: SPLICE POINTS

Code	See Page	Wire Harness with Splice Points	Code	See Page	Wire Harness with Splice Points
I9	44	Cowl Wire			

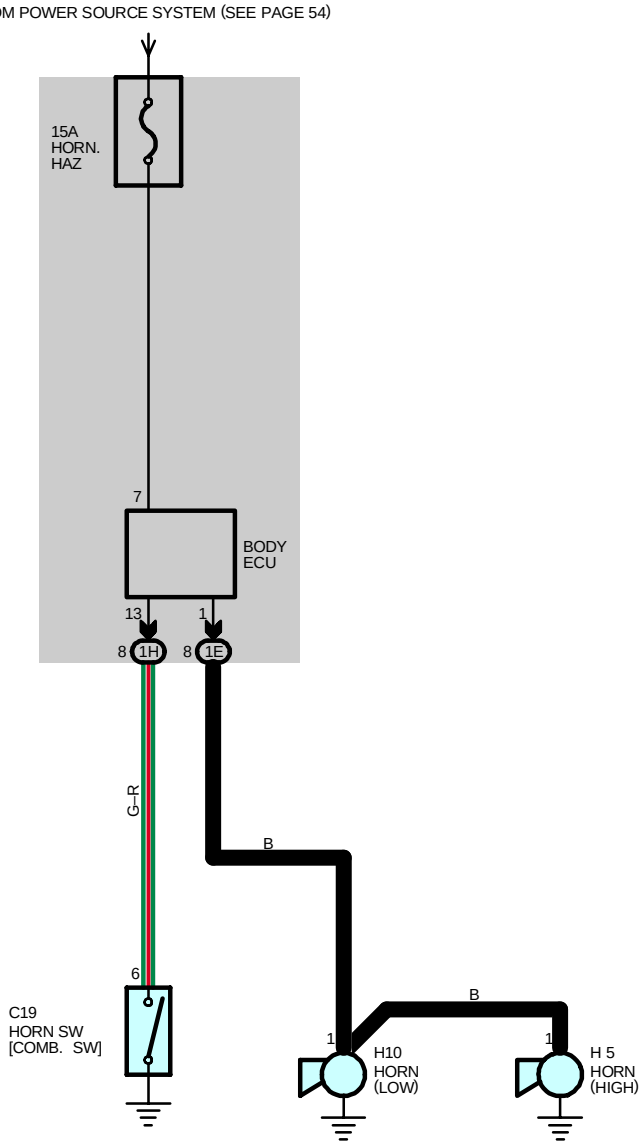
FROM POWER SOURCE SYSTEM (SEE PAGE 54)
15A
HORN.
HAZ
7
BODY
ECU
13
1
8
1H
8
1E
G–R
B
6
C19
HORN SW
[COMB. SW]
B
1
H10
HORN
(LOW)
1
H 5
HORN
(HIGH)

SERVICE HINTS

BODY ECU

13–GROUND : Continuity with horn SW on

○ : PARTS LOCATION

Code	See Page	Code	See Page	Code	See Page
C19	34	H5	32 (3RZ–FE, 2RZ–FE)	H10	32 (3RZ–FE, 2RZ–FE)
H5	30 (5VZ–FE)	H10	30 (5VZ–FE)		

: JUNCTION BLOCK AND WIRE HARNESS CONNECTOR

Code	See Page	Junction Block and Wire Harness (Connector Location)
1E	23	Engine Room Main Wire and J/B No.1 (Lower Finish Panel)
1H	23	Cowl Wire and J/B No.1 (Lower Finish Panel)

MEMO

NOTICE: When inspecting or repairing the SRS, perform the operation in accordance with the following precautionary instructions and the procedure and precautions in the Repair Manual for the applicable model year.

- Malfunction symptoms of the SRS are difficult to confirm, so the DTCs become the most important source of information when troubleshooting. When troubleshooting the SRS, always inspect the DTCs before disconnecting the battery.
- **Work must be started after 90 seconds from when the ignition switch is turned to the "LOCK" position and the negative (–) terminal cable is disconnected from the battery.**
  (The SRS is equipped with a back–up power source so that if work is started within 90 seconds from disconnecting the negative (–) terminal cable of the battery, the SRS may be deployed.)
- When the negative (–) terminal cable is disconnected from the battery, the memory of the clock and audio system will be canceled. So before starting work, make a record of the contents memorized in the audio memory system. When work is finished, reset the audio systems as they were before and adjust the clock. To avoid erasing the memory in each memory system, never use a back–up power supply from outside the vehicle.
- Before repairs, remove the airbag sensor if shocks are likely to be applied to the sensor during repairs.
- Do not expose the steering wheel pad, front passenger airbag assembly, seat belt pretensioner, center airbag sensor assembly or front airbag sensor assembly directly to hot air or flames.
- Even in cases of a minor collision where the SRS does not deploy, the steering wheel pad, front passenger airbag assembly, seat belt pretensioner, center airbag sensor assembly and front airbag sensor assembly should be inspected.
- Never use SRS parts from another vehicle. When replacing parts, replace them with new parts.
- Never disassemble and repair the steering wheel pad, front passenger airbag assembly, seat belt pretensioner, center airbag sensor assembly or front airbag sensor assembly in order to reuse it.
- If the steering wheel pad, front passenger airbag assembly, seat belt pretensioner, center airbag sensor assembly or front airbag sensor assembly has been dropped, or if there are cracks, dents or other defects in the case, bracket or connector, replace them with new ones.
- Use a volt/ohmmeter with high impedance (10 kΩ/V minimum) for troubleshooting the system's electrical circuits.
- Information labels are attached to the periphery of the SRS components. Follow the instructions on the notices.
- After work on the SRS is completed, perform the SRS warning light check.
- If the vehicle is equipped with a mobile communication system, refer to the precaution in the IN section of the Repair Manual.

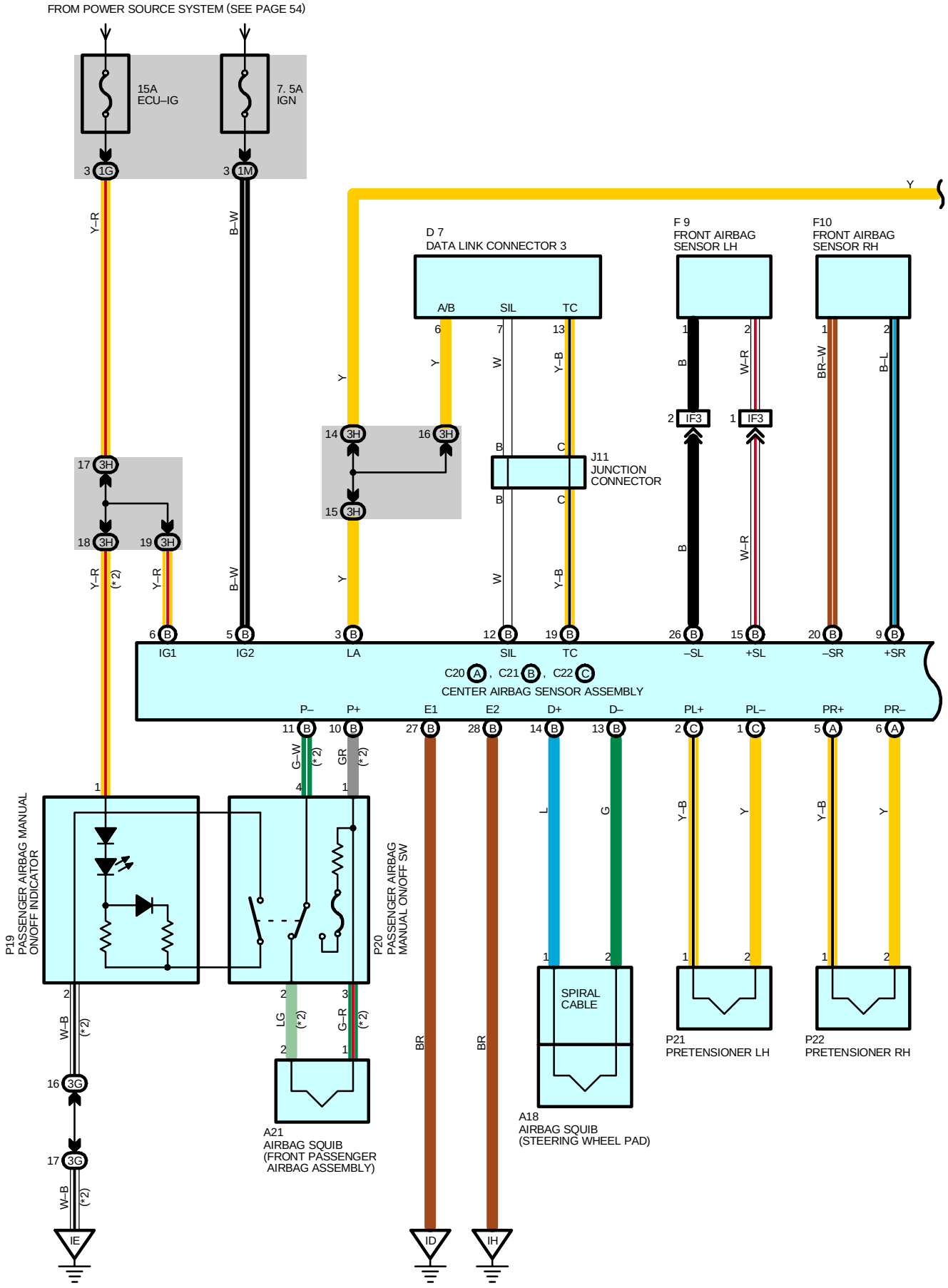
FROM POWER SOURCE SYSTEM (SEE PAGE 54)
15A
ECU–IG
7. 5A
IGN
3 1G
3 1M
Y–R
B–W
Y
D 7
DATA LINK CONNECTOR 3
A/B
SIL
TC
F 9
FRONT AIRBAG
SENSOR LH
F10
FRONT AIRBAG
SENSOR RH
BR–W
B–L
IF3
J11
JUNCTION
CONNECTOR
C20 A , C21 B , C22 C
CENTER AIRBAG SENSOR ASSEMBLY
IG1
IG2
LA
SIL
TC
–SL
+SL
–SR
+SR
P–
P+
E1
E2
D+
D–
PL+
PL–
PR+
PR–
G–W
GR
L
G
Y–B
BR
SPIRAL
CABLE
P19
PASSENGER AIRBAG MANUAL
ON/OFF INDICATOR
P20
PASSENGER AIRBAG
MANUAL ON/OFF SW
W–B
LG
G–R
A21
AIRBAG SQUIB
(FRONT PASSENGER
AIRBAG ASSEMBLY)
A18
AIRBAG SQUIB
(STEERING WHEEL PAD)
P21
PRETENSIONER LH
P22
PRETENSIONER RH
IE
ID
IH
(*2)

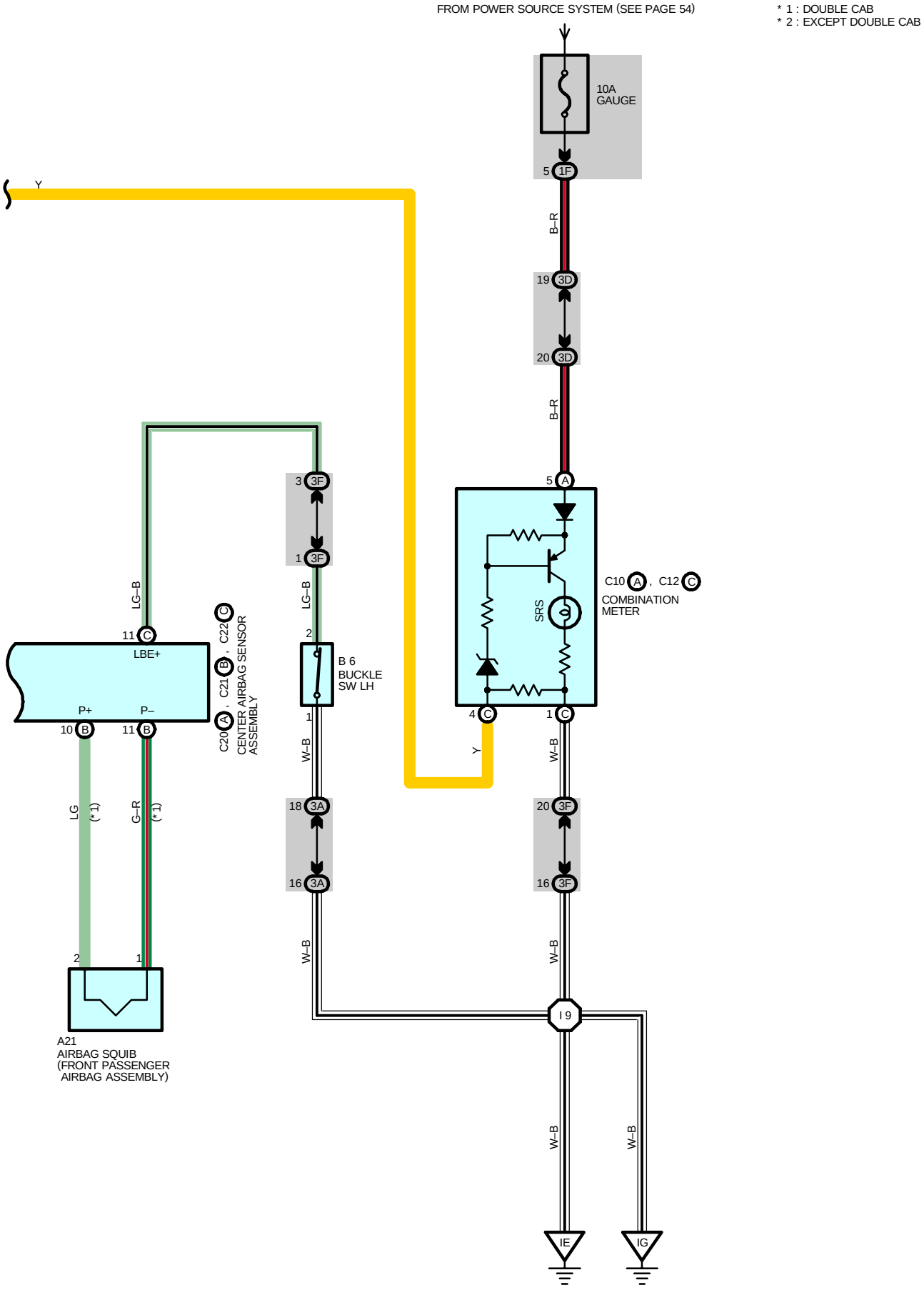
FROM POWER SOURCE SYSTEM (SEE PAGE 54)
* 1 : DOUBLE CAB
* 2 : EXCEPT DOUBLE CAB
10A
GAUGE
5 1F
B–R
19 3D
20 3D
B–R
5 A
Y
3 3F
1 3F
LG–B
2
B 6
BUCKLE
SW LH
1
W–B
18 3A
16 3A
W–B
LG–B
11 C
LBE+
C22 C
C21 B
C20 A
CENTER AIRBAG SENSOR
ASSEMBLY
P+
P–
10 B
11 B
LG
(*1)
G–R
(*1)
2
1
A21
AIRBAG SQUIB
(FRONT PASSENGER
AIRBAG ASSEMBLY)
SRS
C10 A , C12 C
COMBINATION
METER
4 C
1 C
Y
W–B
20 3F
16 3F
W–B
I 9
W–B
W–B
IE
IG

SYSTEM OUTLINE

The SRS is a driver protection device which has a supplemental role to the seat belts.
When the ignition SW is turned to ACC or ON, the current from the ACC fuse flows to TERMINAL (B) 6 of the center airbag sensor assembly. Only when the ignition SW on, the current from the IGN fuse flows to TERMINAL (B) 5 of the center airbag sensor assembly.
If an accident occurs while driving, deceleration caused by a frontal impact is detected (by sensor) and when the frontal impact exceeds a set level, the current from the ACC or IGN fuse flows to TERMINALS (B) 6 or (B) 5 of the center airbag sensor assembly. This current flows to TERMINAL (B) 14 to TERMINAL 1 of the airbag squib (Steering wheel pad) to TERMINAL 2 to TERMINAL (B) 13 of the center airbag sensor assembly, and also flows to TERMINAL (B) 10 of the center airbag sensor assembly to TERMINAL 2 of the airbag squib (Front passenger airbag assembly) to TERMINAL 1 of the center airbag assembly (Double cab) or TERMINAL (B) 10 of the center airbag sensor assembly to TERMINAL 1 of the passenger airbag manual on/off SW to TERMINAL 3 to TERMINAL 1 of the airbag squib (Front passenger airbag assembly) to TERMINAL 2 to TERMINAL 2 of the passenger airbag manual on/off SW to TERMINAL 4 to TERMINAL (B) 11 of the center airbag sensor assembly (Except double cab). Furthermore, the current flows to TERMINAL (B) 27 or (B) 28 to GROUND, causing the center airbag squibs to expand.
When the safing sensor built into the center airbag sensor assembly is on, airbag sensor is off and the current from the ACC or IGN fuse flows same as above–mentioned flowing, causing the airbag squibs to expand. When the safing sensor built into the center airbag sensor assembly is on, the airbag sensor on one of the above-mentioned circuits is activated so that current flows to the airbag squibs and causes them to operate.
The airbag stored inside the steering wheel pad is instantaneously expanded to soften the shock to the driver.
The airbag stored inside the passenger's instrument panel is instantaneously expanded to soften the shock to the passenger.

1. FRONT PASSENGER AIRBAG MANUAL ON/OFF OPERATION (EXCEPT DOUBLE CAB)

When the passenger airbag manual on/off SW is on, the current flowing from the ACC or IGN fuse to the airbag squib (Front passenger airbag assembly) is same as above, causing the airbag squib (Front passenger airbag assembly) to expand in an accident.
If the passenger airbag manual on/off SW is turned to off, the current flows from the ACC fuse to TERMINAL 1 of the passenger airbag manual on/off indicator to TERMINAL 2 to GROUND, lighting the indicator up. Then the current between TERMINAL (B) 11 of the airbag sensor assembly and the airbag squib (Front passenger airbag assembly) is cut off, so that it does not expand the airbag squib (Front passenger airbag assembly) in an accident.

: PARTS LOCATION

Code	See Page	Code	See Page	Code	See Page
A18	34	C21 B	34	J11	35
A21	34	C22 C	34	P19	35
B6	36 (Double Cab)	D7	34	P20	35
	37 (Except Double Cab)	F9	30 (5VZ–FE)	P21	36 (Double Cab)
C10 A	34		32 (3RZ–FE, 2RZ–FE)		37 (Except Double Cab)
C12 C	34	F10	30 (5VZ–FE)	P22	36 (Double Cab)
C20 A	34		32 (3RZ–FE, 2RZ–FE)		37 (Except Double Cab)

: JUNCTION BLOCK AND WIRE HARNESS CONNECTOR

Code	See Page	Junction Block and Wire Harness (Connector Location)
1F	23	Cowl Wire and J/B No.1 (Lower Finish Panel)
1G		
1M		
3A	24	Cowl Wire and J/B No.3 (Behind the Instrument Panel Left)
3D		
3F		
3G	26	Cowl Wire and J/B No.3 (Behind the Instrument Panel Center)
3H		

: CONNECTOR JOINING WIRE HARNESS AND WIRE HARNESS

Code	See Page	Joining Wire Harness and Wire Harness (Connector Location)
IF3	44	Engine Room Main Wire and Cowl Wire (Left Kick Panel)



: GROUND POINTS

Code	See Page	Ground Points Location
ID	44	Left Kick Panel
IE	44	Around the Right Edge of the Reinforcement
IG	44	Around the Left Edge of the Reinforcement
IH	44	Right Kick Panel



: SPLICE POINTS

Code	See Page	Wire Harness with Splice Points	Code	See Page	Wire Harness with Splice Points
I9	44	Cowl Wire			

REAR DIFFERENTIAL LOCK

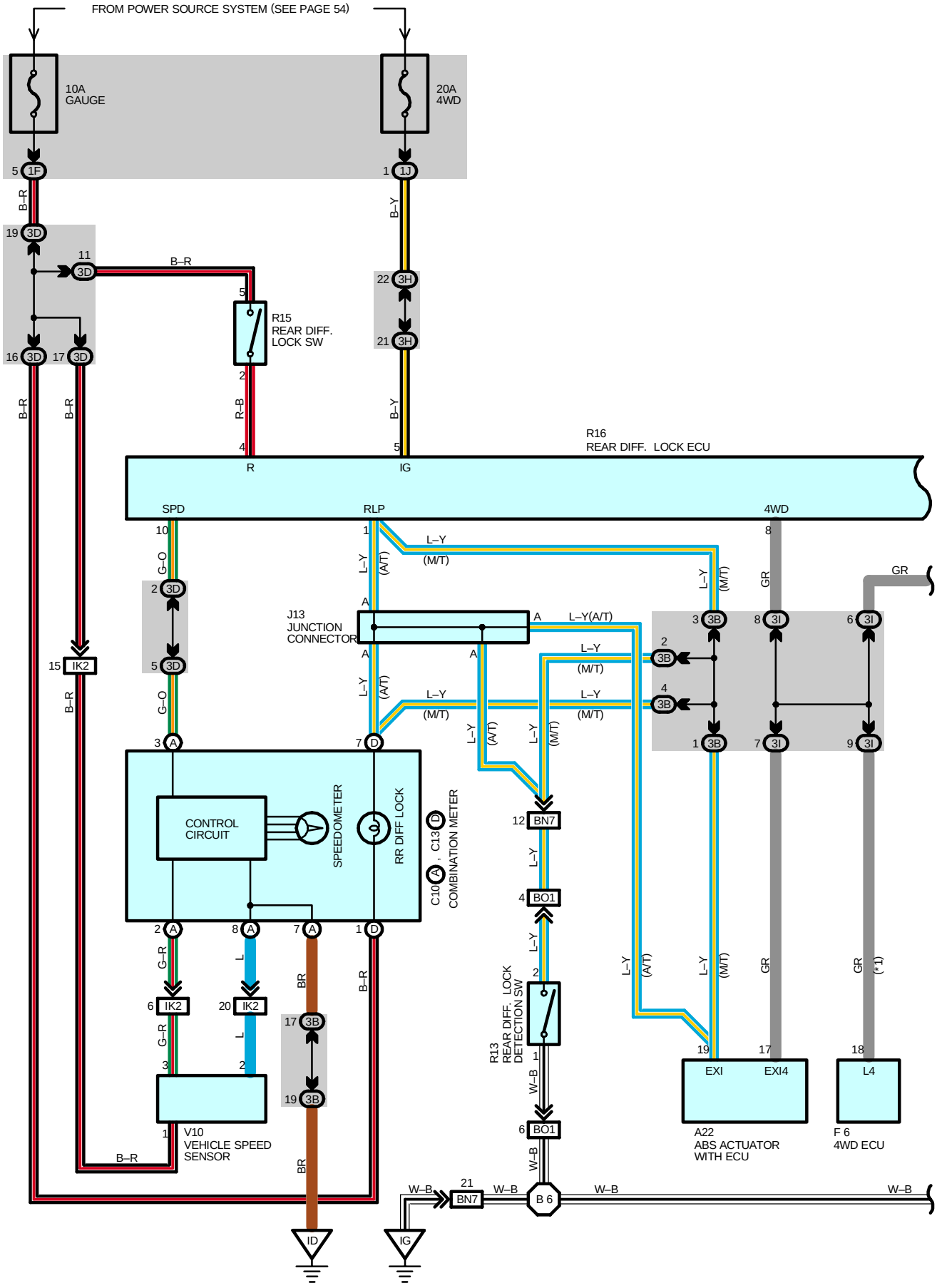

* 1 : W/ 2–4 SELECT SW
* 2 : W/O 2–4 SELECT SW

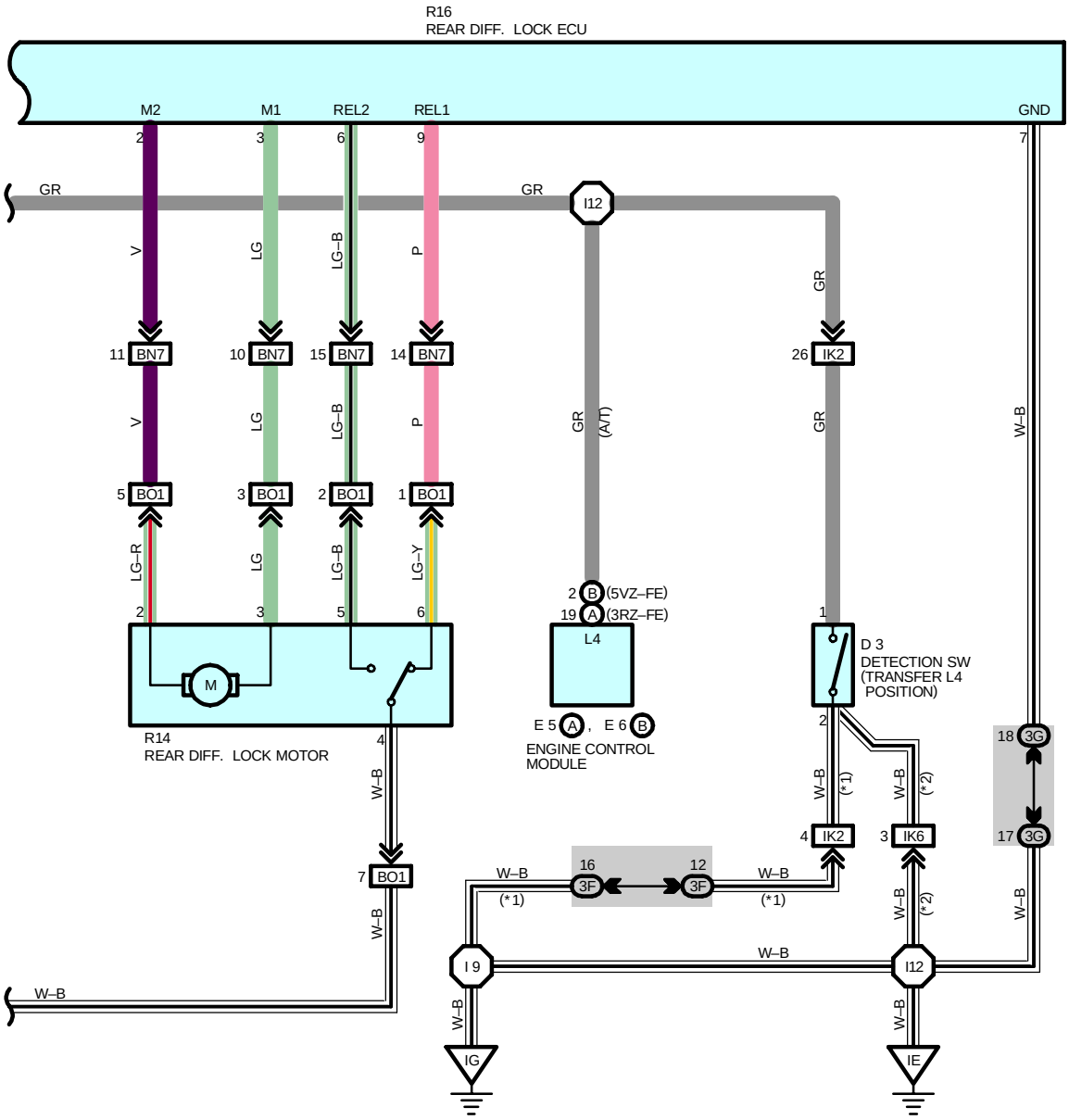

REAR DIFFERENTIAL LOCK

SYSTEM OUTLINE

This system frees or locks the rear differential according to the position of the rear diff. lock SW. The differential will lock only when the rear diff. lock detection SW is on and the vehicle speed is at 8 km/h (5 mph) or less.
When the rear diff. lock SW is switched from OFF position to ON position, current flows to TERMINAL 4 of the rear diff. lock ECU. If the limit SW on the lock side inside the rear diff. lock motor is on at this time, until the limit SW is turned off, current flows from the 4WD fuse to TERMINAL 5 of the rear diff. lock ECU to TERMINAL 3 to TERMINAL 3 of the rear diff. lock motor to TERMINAL 2 to TERMINAL 2 of the rear diff. lock ECU to TERMINAL 7 to GROUND. This drives the rear diff. lock motor and locks the rear differential. When the rear differential locks, the rear diff. lock detection SW turns on, lighting up the rear diff. lock indicator light in the combination meter.
When the rear diff. lock SW is switched from ON position to OFF position, the current to TERMINAL 4 of the rear diff. lock ECU is cut off. If the limit SW on the free side inside the rear diff. lock motor is on, until the limit SW is turned off, current flows from the 4WD fuse to TERMINAL 5 of the rear diff. lock ECU to TERMINAL 2 to TERMINAL 2 of the rear diff. lock motor to TERMINAL 3 to TERMINAL 3 of the rear diff. lock ECU to TERMINAL 7 to GROUND. This drives the rear diff. lock motor and frees the rear differential. When the rear differential is free, the rear diff. lock detection SW and the rear diff. lock indicator light in the combination meter are turned off.
The rear diff. lock indicator light flashes when:

* The rear diff. lock SW is switched to ON position during differential lock prohibition conditions (Vehicle speed above 8 km/h (5 mph)).
* The rear diff. lock detection SW is turned off during operation of the rear diff. lock motor.

SERVICE HINTS

R15 REAR DIFF. LOCK SW

5–2 : Closed with the diff. lock SW at **ON** position

R16 REAR DIFF. LOCK ECU

(Disconnected wiring connector from ECU)
7–GROUND : Always continuity
10–GROUND : Pulse generation with vehicle moving
5–GROUND : **9**–**14** volts with the ignition SW on
1–GROUND : About **0** volts with the rear diff. lock indicator light on
: **9**–**14** volts with the rear diff. lock indicator light off

R14 REAR DIFF. LOCK MOTOR

2–3 : **0.3**–**100** Ω

○ : PARTS LOCATION

Code	See Page	Code	See Page	Code	See Page
A22	30 (5VZ–FE)	E5 A	35	R14	36 (Double Cab)
	32 (3RZ–FE)	E6 B	35		37 (Except Double Cab)
C10 A	34	F6	35	R15	35
C13 D	34	J13	35	R16	35
D3	30 (5VZ–FE)	R13	36 (Double Cab)	V10	31 (5VZ–FE)
	32 (3RZ–FE)		37 (Except Double Cab)		33 (3RZ–FE)

: JUNCTION BLOCK AND WIRE HARNESS CONNECTOR

Code	See Page	Junction Block and Wire Harness (Connector Location)
1F	23	Cowl Wire and J/B No.1 (Lower Finish Panel)
1J		
3B	24	Cowl Wire and J/B No.3 (Behind the Instrument Panel Left)
3D		
3F		
3G	26	Cowl Wire and J/B No.3 (Behind the Instrument Panel Center)
3H		
3I		

: CONNECTOR JOINING WIRE HARNESS AND WIRE HARNESS

Code	See Page	Joining Wire Harness and Wire Harness (Connector Location)
IK2	44	Engine Wire and Cowl Wire (Above the Glove Box)
IK6		
BN7	46 (Double Cab)	Frame Wire and Cowl Wire (Under the Driver's Seat)
	48 (Except Double Cab)	
BO1	46 (Double Cab)	Frame Wire and Differential No.2 Wire (Rear Side Member LH)
	48 (Except Double Cab)	

: GROUND POINTS

Code	See Page	Ground Points Location
ID	44	Left Kick Panel
IE	44	Around the Right Edge of the Reinforcement
IG	44	Around the Left Edge of the Reinforcement

: SPLICE POINTS

Code	See Page	Wire Harness with Splice Points	Code	See Page	Wire Harness with Splice Points
I9	44	Cowl Wire	B6	46 (Double Cab)	Frame Wire
I12				48 (Except Double Cab)	

SHIFT LOCK

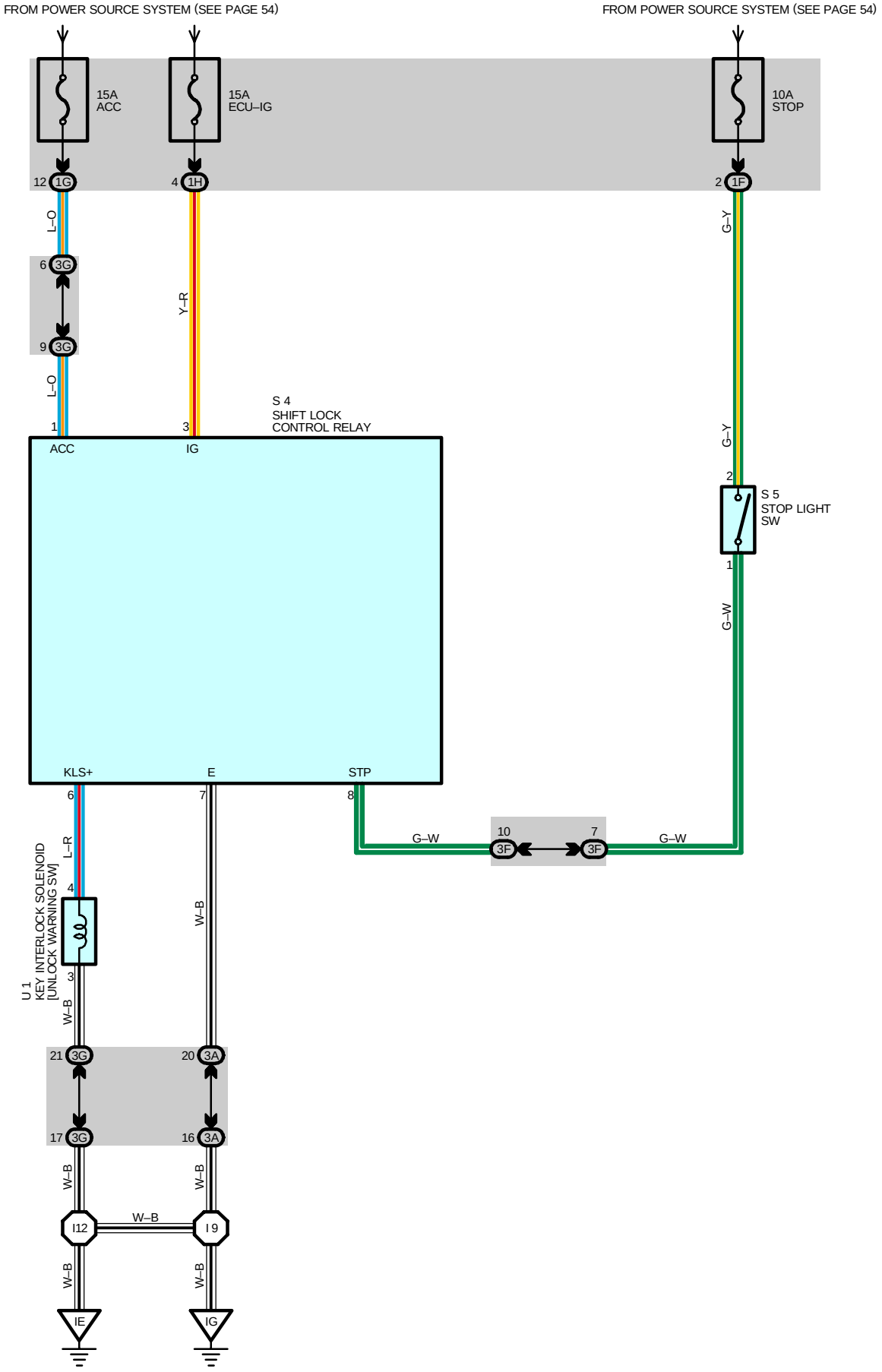
FROM POWER SOURCE SYSTEM (SEE PAGE 54)
FROM POWER SOURCE SYSTEM (SEE PAGE 54)
15A
ACC
15A
ECU–IG
10A
STOP
12 1G
4 1H
2 1F
L–O
6 3G
9 3G
L–O
Y–R
G–Y
G–Y
S 4
SHIFT LOCK
CONTROL RELAY
1
ACC
3
IG
2
S 5
STOP LIGHT
SW
1
G–W
KLS+
E
STP
6
7
8
G–W
10 3F
7 3F
G–W
L–R
4
W–B
U 1
KEY INTERLOCK SOLENOID
[UNLOCK WARNING SW]
3
W–B
21 3G
20 3A
17 3G
16 3A
W–B
W–B
W–B
I12
W–B
I 9
W–B
W–B
IE
IG

SERVICE HINTS

S4 SHIFT LOCK CONTROL RELAY

1–GROUND : Approx. **12** volts with the ignition SW at **ACC** or **ON** position
3–GROUND : Approx. **12** volts with the ignition SW at **ON** position
7–GROUND : Always continuity
8–GROUND : Approx. **12** volts with the brake pedal depressed

: PARTS LOCATION

Code	See Page	Code	See Page	Code	See Page
S4	35	S5	35	U1	35

: JUNCTION BLOCK AND WIRE HARNESS CONNECTOR

Code	See Page	Junction Block and Wire Harness (Connector Location)
1F	23	Cowl Wire and J/B No.1 (Lower Finish Panel)
1G		
1H		
3A	24	Cowl Wire and J/B No.3 (Behind the Instrument Panel Left)
3F		
3G	26	Cowl Wire and J/B No.3 (Behind the Instrument Panel Center)

: GROUND POINTS

Code	See Page	Ground Points Location
IE	44	Around the Right Edge of the Reinforcement
IG	44	Around the Left Edge of the Reinforcement

: SPLICE POINTS

Code	See Page	Wire Harness with Splice Points	Code	See Page	Wire Harness with Splice Points
I9	44	Cowl Wire	I12	44	Cowl Wire

DOOR LOCK CONTROL

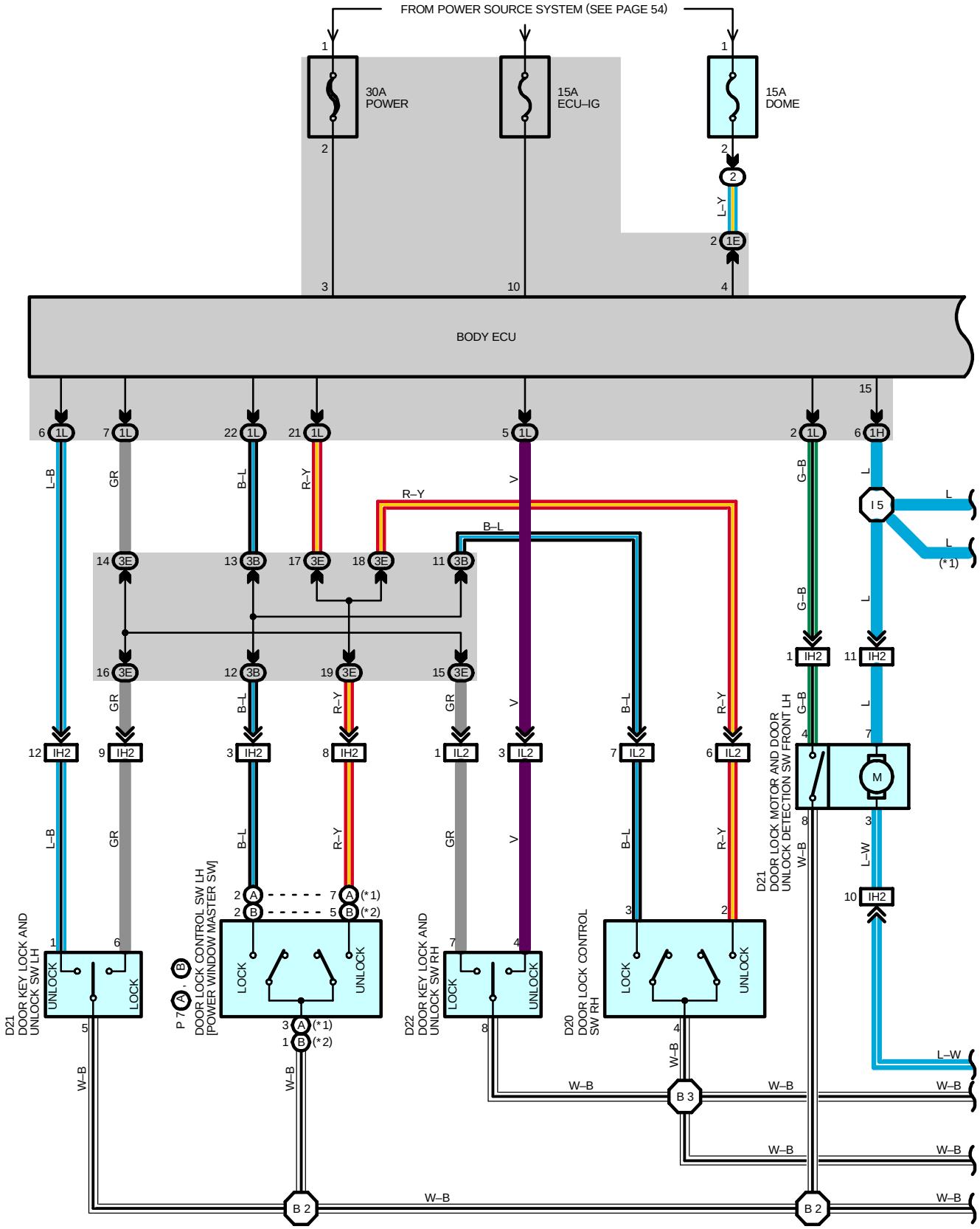

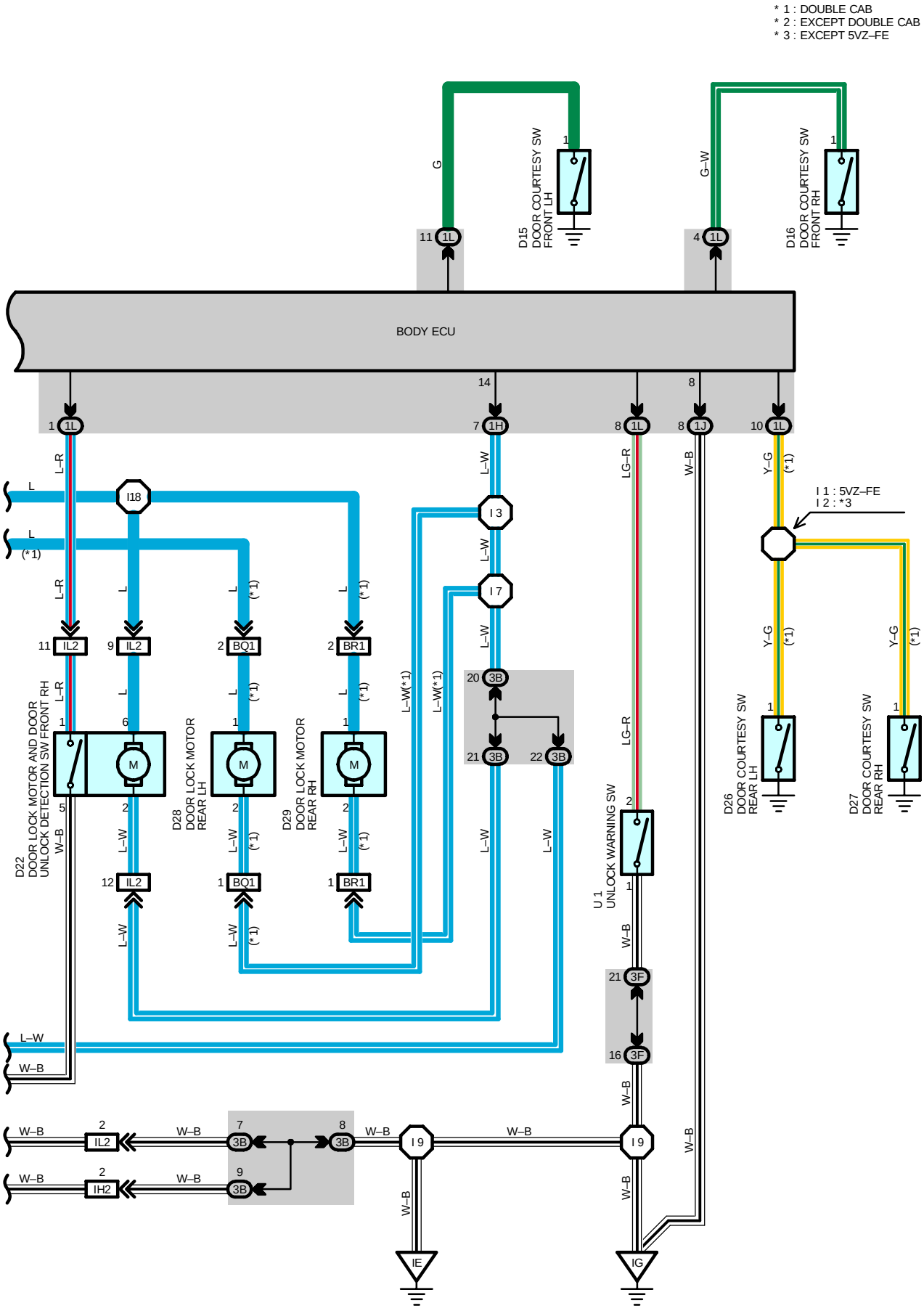
* 1 : DOUBLE CAB
* 2 : EXCEPT DOUBLE CAB
* 3 : EXCEPT 5VZ–FE
BODY ECU
D15 DOOR COURTESY SW FRONT LH
D16 DOOR COURTESY SW FRONT RH
D22 DOOR LOCK MOTOR AND DOOR UNLOCK DETECTION SW FRONT RH
D28 DOOR LOCK MOTOR REAR LH
D29 DOOR LOCK MOTOR REAR RH
D26 DOOR COURTESY SW REAR LH
D27 DOOR COURTESY SW REAR RH
U 1 UNLOCK WARNING SW
I 1 : 5VZ–FE
I 2 : *3
G
G–W
L–R
L–W
LG–R
W–B
Y–G
(*1)
IE
IG

DOOR LOCK CONTROL

SYSTEM OUTLINE

Current always flows to TERMINAL 3 of the body ECU through the POWER fuse.

1. MANUAL LOCK OPERATION

To push the door lock control SW or door key lock and unlock SW to LOCK position, a lock signal is input to the body ECU and causes the ECU to function. Current flows from TERMINAL 3 of the ECU to TERMINAL 14 to TERMINALS 3 (Front LH), 2 (Front RH, rear) of the door lock motors to TERMINALS 7 (Front LH), 6 (Front RH), 1 (Rear) to TERMINAL 15 of the ECU to TERMINAL 8 to GROUND and the door lock motor causes the door to lock.

2. MANUAL UNLOCK OPERATION

To push the door lock control SW or door key lock and unlock SW to UNLOCK position, an unlock signal is input to the body ECU and causes the ECU to function. Current flows from TERMINAL 3 of the ECU to TERMINAL 15 to TERMINALS 7 (Front LH), 6 (Front RH), 1 (Rear) of the door lock motors to TERMINALS 3 (Front LH), 2 (Front RH, rear) to TERMINAL 14 of the ECU to TERMINAL 8 to GROUND and the door lock motor causes the door to unlock.

3. IGNITION KEY REMINDER OPERATION

∗ Operating door lock knob (in door lock motor operation)
With ignition key in cylinder (Unlock warning SW on), when any door is opened and locked using door lock knob (Door lock motor), all doors are locked once but each door is unlocked soon by the function of the body ECU. As a result, current flows from TERMINAL 3 of the ECU to TERMINAL 15 to TERMINALS 7 (Front LH), 6 (Front RH), 1 (Rear) of the door lock motors to TERMINALS 3 (LH), 2 (Front RH, rear) to TERMINAL 14 of the ECU to TERMINAL 8 to GROUND and causes all the doors to unlock.

∗ Operating door lock control SW or door key lock and unlock SW
With ignition key in cylinder (Unlock warning SW on), when any door is opened and locked using the door lock control SW or door key lock and unlock SW, all doors are locked once but each door is unlocked by the function of the SW contained in motor, which inputs the signal to the body ECU. According to this input signal, current flows from TERMINAL 3 of the ECU to TERMINAL 15 to TERMINALS 7 (Front LH), 6 (Front RH), 1 (Rear) of the door lock motors to TERMINALS 3 (Front LH), 2 (Front RH, rear) to TERMINAL 14 of the ECU to TERMINAL 8 to GROUND and causes all the doors to unlock.

SERVICE HINTS

BODY ECU

8–GROUND : Always continuity.
3, 4–GROUND : Always approx. **12** volts
15–GROUND : Approx. **12** volts for **0.2** seconds with following operations.
∗ Door lock control SW unlocked.
∗ Door lock control SW locked with ignition key in cylinder and LH door open. (Ignition key reminder function)
∗ Door lock knob locked with ignition key in cylinder and LH door open. (Ignition key reminder function)
∗ Unlocking the LH, RH door cylinder with key.
14–GROUND : Approx. **12** volts for **0.2** seconds with following operations.
∗ Door lock control SW locked.
∗ Locking the LH, RH door cylinder with key.

D15, D16, D26, D27 DOOR COURTESY SW FRONT REAR LH, RH

1–GROUND : Closed with door open.

D21, D22 DOOR LOCK MOTOR, DOOR UNLOCK DETECTION SW AND DOOR KEY LOCK AND UNLOCK SW LH, RH

4–8 (LH), 1–5 (RH) : Closed with **UNLOCK** position.

U1 UNLOCK WARNING SW

2–1 : Closed with key in cylinder.

○ : PARTS LOCATION

Code	See Page	Code	See Page	Code		See Page
D15	34	D21	37 (Except Double Cab)	D28		36 (Double Cab)
D16	34	D22	36 (Double Cab)	D29		36 (Double Cab)
D20	36 (Double Cab)		37 (Except Double Cab)	P7	A	36 (Double Cab)
	37 (Except Double Cab)	D26	36 (Double Cab)		B	37 (Except Double Cab)
D21	36 (Double Cab)	D27	36 (Double Cab)	U1		35

: RELAY BLOCKS

Code	See Page	Relay Blocks (Relay Block Location)
2	21	R/B No.2 (Engine Compartment Left)

: JUNCTION BLOCK AND WIRE HARNESS CONNECTOR

Code	See Page	Junction Block and Wire Harness (Connector Location)
1E	23	Engine Room Main Wire and J/B No.1 (Lower Finish Panel)
1H	23	Cowl Wire and J/B No.1 (Lower Finish Panel)
1J		
1L	22	
3B	24	Cowl Wire and J/B No.3 (Behind the Instrument Panel Left)
3E		
3F		

: CONNECTOR JOINING WIRE HARNESS AND WIRE HARNESS

Code	See Page	Joining Wire Harness and Wire Harness (Connector Location)
IH2	44	Front Door LH Wire and Cowl Wire (Left Kick Panel)
IL2	44	Front Door RH Wire and Cowl Wire (Right Kick Panel)
BQ1	46 (Double Cab)	Rear Door No.2 Wire and Cowl Wire (Under the Left Center Pillar)
BR1	46 (Double Cab)	Rear Door No.1 Wire and Cowl Wire (Under the Right Center Pillar)

: GROUND POINTS

Code	See Page	Ground Points Location
IE	44	Around the Right Edge of the Reinforcement
IG	44	Around the Left Edge of the Reinforcement

: SPLICE POINTS

Code	See Page	Wire Harness with Splice Points	Code	See Page	Wire Harness with Splice Points
I1	44	Cowl Wire	I18	44	Cowl Wire
I2			B2	46 (Double Cab)	Front Door LH Wire
I3				48 (Except Double Cab)	
I5			B3	46 (Double Cab)	Front Door RH Wire
I7				48 (Except Double Cab)	
I9					

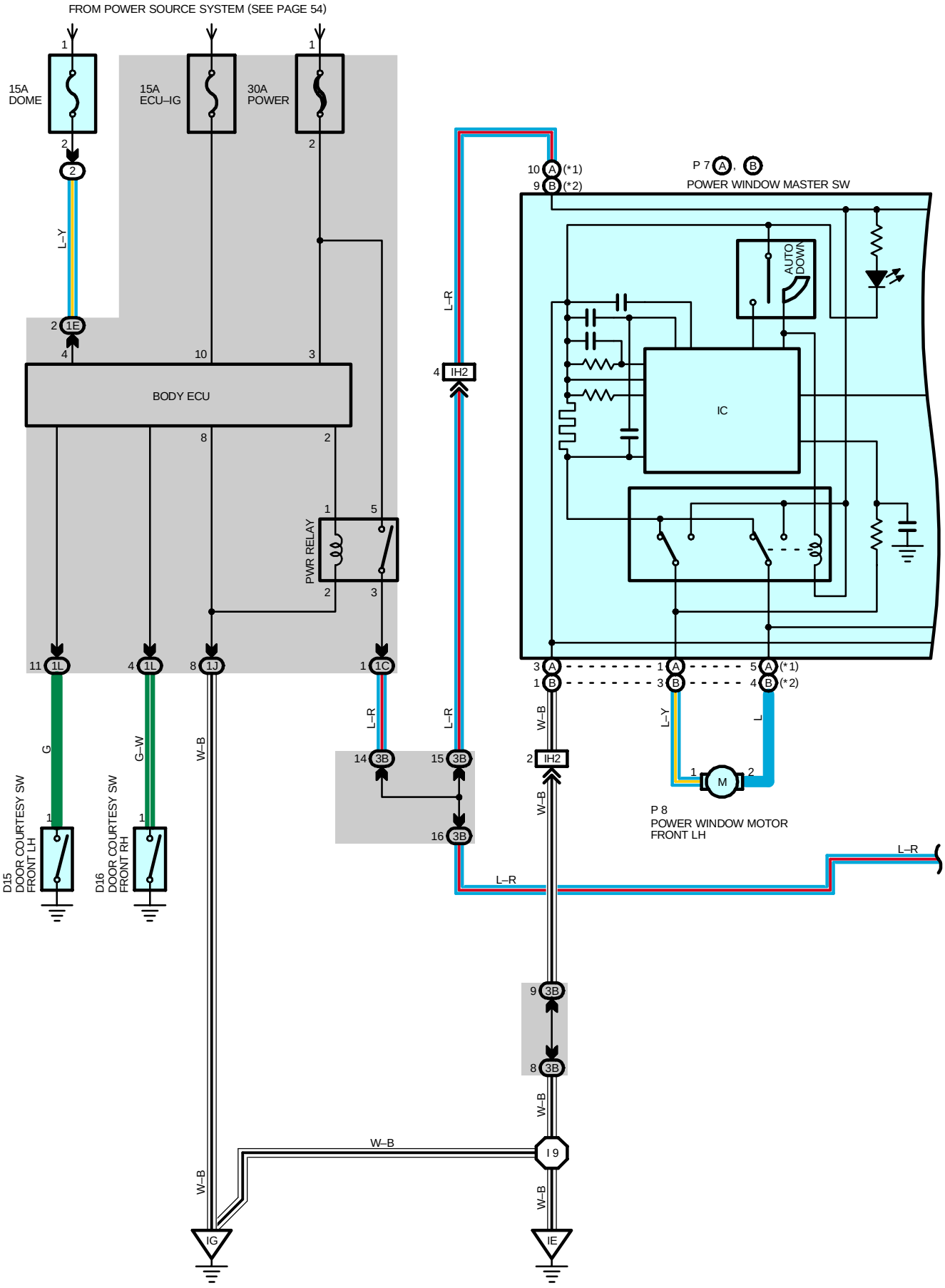
FROM POWER SOURCE SYSTEM (SEE PAGE 54)
15A DOME
15A ECU–IG
30A POWER
BODY ECU
PWR RELAY
P 7 A, B
POWER WINDOW MASTER SW
AUTO DOWN
IC
P 8
POWER WINDOW MOTOR FRONT LH
D15 DOOR COURTESY SW FRONT LH
D16 DOOR COURTESY SW FRONT RH
IG
IE
L–Y
L–R
G
G–W
W–B
L

* 1 : DOUBLE CAB
* 2 : EXCEPT DOUBLE CAB

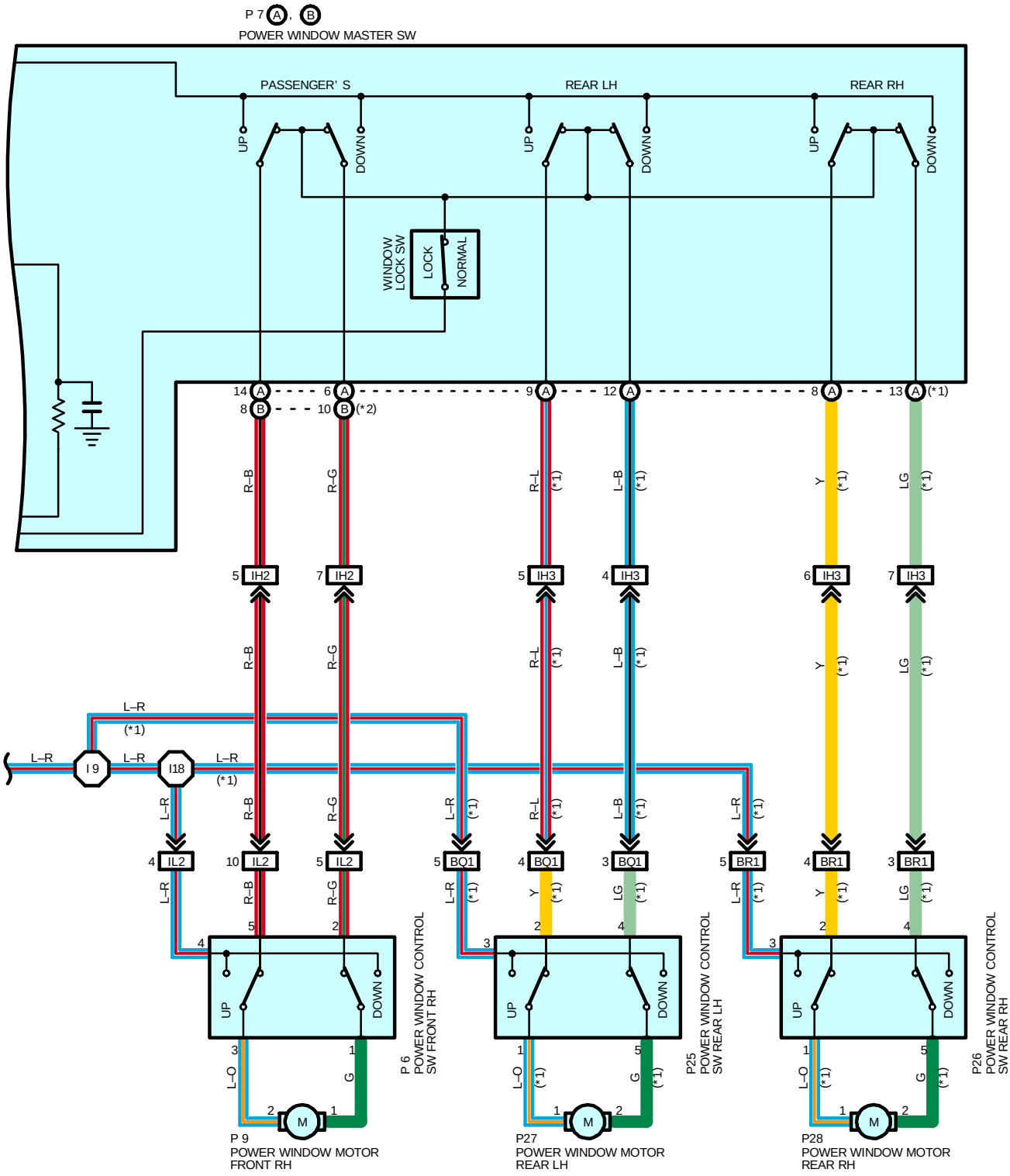

SYSTEM OUTLINE

With the ignition SW turned on, current flows through the ECU–IG fuse to TERMINAL 10 of the body ECU to TERMINAL 2 to TERMINAL 1 of the PWR relay to TERMINAL 2 to GROUND, activating the PWR relay, and the current flowing from TERMINAL 5 of the PWR relay flows to TERMINAL 3 to TERMINAL (A) 10 (Double cab), (B) 9 (Except double cab) of the power window master SW and TERMINAL 4 (Front RH), 3 (Rear) of the power window control SW.

1. MANUAL OPERATION (DRIVER'S WINDOW)

With the ignition SW turned on and with the power window master SW (Manual SW) in UP position, the current flowing to TERMINAL (A) 10 (Double cab), (B) 9 (Except double cab) of the power window master SW flows to TERMINAL (A) 1 (Double cab), (B) 3 (Except double cab) to TERMINAL 1 of the power window motor LH to TERMINAL 2 to TERMINAL (A) 5 (Double cab), (B) 4 (Except double cab) of the master SW to TERMINAL (A) 3 (Double cab), (B) 1 (Except double cab) to GROUND and causes the power window motor to rotate in the up direction. The window ascends only while the SW is being pushed.

In down operation, the current flowing from TERMINAL (A) 10 (Double cab), (B) 9 (Except double cab) of the power window master SW to TERMINAL (A) 5 (Double cab), (B) 4 (Except double cab) flows to TERMINAL 2 of the motor LH to TERMINAL 1 to TERMINAL (A) 1 (Double cab), (B) 3 (Except double cab) of the master SW to TERMINAL (A) 3 (Double cab), (B) 1 (Except double cab) to GROUND, flowing in the opposite direction to manual up operation, causing the motor to rotate in reverse and lowering the window.

2. AUTO DOWN OPERATION (DRIVER'S WINDOW)

With the ignition SW on and with the auto SW of the power window master SW in DOWN position, the current flowing to TERMINAL (A) 10 (Double cab), (B) 9 (Except double cab) of the master SW flows to TERMINAL (A) 5 (Double cab), (B) 4 (Except double cab) of the master SW to TERMINAL 2 of the power window motor LH to TERMINAL 1 to TERMINAL (A) 1 (Double cab), (B) 3 (Except double cab) of the master SW to TERMINAL (A) 3 (Double cab), (B) 1 (Except double cab) to GROUND, causing the motor to rotate towards the down side.

Then the solenoid in the master SW is activated and it locks the auto SW being pushed, causing the motor to continue to rotate in auto down operation.

When the window has completely descended, the current flowing between TERMINAL (A) 1 (Double cab), (B) 3 (Except double cab) of the master SW and TERMINAL (A) 3 (Double cab), (B) 1 (Except double cab) increases. As a result, the solenoid stops operating, the auto SW turns off and the flowing from TERMINAL (A) 10 (Double cab), (B) 9 (Except double cab) of the master SW to TERMINAL (A) 5 (Double cab), (B) 4 (Except double cab) is cut off, stopping the motor so that auto stop occurs.

3. STOPPING OF AUTO DOWN AT DRIVER'S WINDOW

When the manual SW (Driver's) is pushed to the up side during auto down operation, a ground circuit opens in the master SW and current does not flow from TERMINAL (A) 1 (Double cab), (B) 3 (Except double cab) of the master SW to TERMINAL (A) 3 (Double cab), (B) 1 (Except double cab), so the motor stops, causing auto down operation to stop. If the manual SW is pushed continuously, the motor rotates in the up direction in manual up operation.

4. MANUAL OPERATION BY POWER WINDOW CONTROL SW (FRONT RH WINDOW)

With the power window control SW front RH is pushed to the up side, the current flowing from TERMINAL 4 of the power window control SW front RH flows to TERMINAL 3 to TERMINAL 2 of the power window motor front RH to TERMINAL 1 to TERMINAL 1 of the power window control SW front RH to TERMINAL 2 to TERMINAL (A) 6 (Double cab), (B) 10 (Except double cab) of the master SW to TERMINAL (A) 3 (Double cab), (B) 1 (Except double cab) to GROUND. This causes the power window motor front RH to rotate in the up direction. Up operation is continuous only while the power window control SW RH is pushed to the up side. When the window descends, the current flowing to the motor flows in the opposite direction, from TERMINAL 1 to TERMINAL 2, and the motor rotates in revers.

When the window lock SW is pushed to the lock side, the ground circuit to the front RH window becomes open. As a result, even if Open/Close operation of the front RH window is tried, the current from TERMINAL (A) 3 (Double cab), (B) 1 (Except double cab) of the power window master SW is not grounded and the motor does not rotate, so the front RH window can not be operated and window lock occurs.

5. MANUAL OPERATION (REAR LH, RH WINDOW) [DOUBLE CAB]

With the power window control SW rear LH, RH pulled to the up side, the current flowing from TERMINAL 3 of the power window control SW flows to TERMINAL 1 to TERMINAL 1 of the power window motor to TERMINAL 2 to TERMINAL 5 of the power window control SW to TERMINAL 4 to TERMINAL (A) 12 (LH) or (A) 13 (RH) of the master SW to TERMINAL (A) 3 (Double cab), (B) 1 (Except double cab) to GROUND and causes the power window motor rear LH, RH to rotate in the up direction. The up operation continues only while the power window control SW is pulled to the up side. When the window descends, the current flowing to the motor flows in the opposite direction, from TERMINAL 1 to TERMINAL 2, and the motor rotates in reverse. When the window lock SW is pushed to the lock side, the ground circuit to the rear LH, RH window becomes open.

As a result, even if Open/Close operation of the rear LH, RH window is tried, the current from TERMINAL (A) 3 (Double cab), (B) 1 (Except double cab) of the power window master SW is not grounded and the motor does not rotate, so the rear LH, RH window can not be operated and window lock occurs.

6. KEY OFF POWER WINDOW OPERATION

With the ignition SW turned from on to off, the body ECU operates for about 45 seconds and current flows from TERMINAL 1 of the PWR relay to TERMINAL 2 to GROUND. For this period, current also flows TERMINAL 5 to TERMINAL 3. This current flows to TERMINAL (A) 10 (Double cab), (B) 9 (Except double cab) of the power window master SW and to TERMINAL 4 (Front RH), 3 (Rear) of the power window control SW. As a result, for about 45 seconds after the ignition SW is turned off, it is possible to raise and lower the power window by the functioning of the body ECU. Also, by opening the door (Door courtesy SW on) within about 45 seconds after turning the ignition SW to off, a signal is input to the dody ECU. As a result, the body ECU turns off, and up and down movement of the window stops.

SERVICE HINTS

D15, D16 DOOR COURTESY SW FRONT LH, RH

1–GROUND : Continuity with door open

BODY ECU

10–GROUND : Approx. **12** volts with ignition SW at **ON** position
3, 4–GROUND : Always approx. **12** volts

P7 (A), (B) POWER WINDOW MASTER SW

(A) 3, (B) 1–GROUND : Always continuity
(A) 10, (B) 9–GROUND : Approx. **12** volts with ignition SW on and stays at **12** volts for **45** seconds after the ignition SW is turned off, but if a door is opened in this **45** seconds period, voltage will drop to **0** volts
(A) 1, (B) 3–GROUND : Approx. **12** volts with ignition SW at **ON** position and master SW at **UP** position
(A) 5, (B) 4–GROUND : Approx. **12** volts with ignition SW at **ON** position and master SW at **DOWN** or **AUTO DOWN** position

WINDOW LOCK SW

Open with window lock SW at **LOCK** position

: PARTS LOCATION

Code	See Page	Code	See Page	Code	See Page
D15	34	P7 B	37 (Except Double Cab)	P25	36 (Double Cab)
D16	34	P8	36 (Double Cab)	P26	36 (Double Cab)
P6	36 (Double Cab)		37 (Except Double Cab)	P27	36 (Double Cab)
	37 (Except Double Cab)	P9	36 (Double Cab)	P28	36 (Double Cab)
P7 A	36 (Double Cab)		37 (Except Double Cab)		

: RELAY BLOCKS

Code	See Page	Relay Blocks (Relay Block Location)
2	21	R/B No.2 (Engine Compartment Left)

: JUNCTION BLOCK AND WIRE HARNESS CONNECTOR

Code	See Page	Junction Block and Wire Harness (Connector Location)
1C	23	Cowl Wire and J/B No.1 (Lower Finish Panel)
1E	23	Engine Room Main Wire and J/B No.1 (Lower Finish Panel)
1J	23	Cowl Wire and J/B No.1 (Lower Finish Panel)
1L	22	
3B	24	Cowl Wire and J/B No.3 (Behind the Instrument Panel Left)

: CONNECTOR JOINING WIRE HARNESS AND WIRE HARNESS

Code	See Page	Joining Wire Harness and Wire Harness (Connector Location)
IH2	44	Front Door LH Wire and Cowl Wire (Left Kick Panel)
IH3		
IL2	44	Front Door RH Wire and Cowl Wire (Right Kick Panel)
BQ1	46 (Double Cab)	Rear Door No.2 Wire and Cowl Wire (Under the Left Center Pillar)
BR1	46 (Double Cab)	Rear Door No.1 Wire and Cowl Wire (Under the Right Center Pillar)

 **: GROUND POINTS**

Code	See Page	Ground Points Location
IE	44	Around the Right Edge of the Reinforcement
IG	44	Around the Left Edge of the Reinforcement

 **: SPLICE POINTS**

Code	See Page	Wire Harness with Splice Points	Code	See Page	Wire Harness with Splice Points
I9	44	Cowl Wire	I18	44	Cowl Wire

REMOTE CONTROL MIRROR (w/ POWER WINDOW)

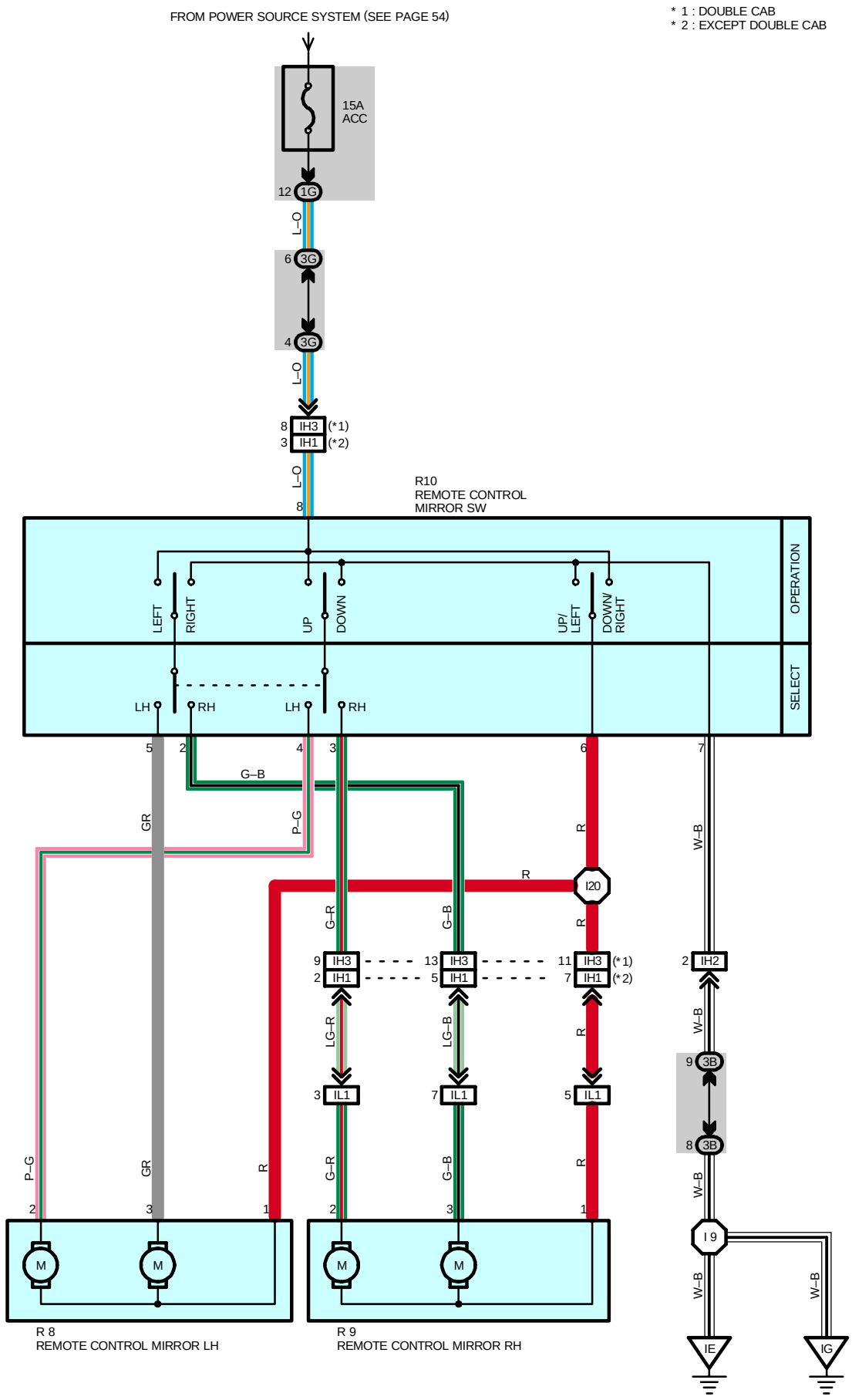

SERVICE HINTS

R10 REMOTE CONTROL MIRROR SW

8–GROUND : Approx. **12** volts with ignition SW at **ACC** or **ON** position
6–7 : Continuity with operation SW at **UP** or **LEFT** position
8–6 : Continuity with operation SW at **DOWN** or **RIGHT** position

: PARTS LOCATION

Code	See Page	Code	See Page	Code	See Page
R8	36 (Double Cab)	R9	36 (Double Cab)	R10	36 (Double Cab)
	37 (Except Double Cab)		37 (Except Double Cab)		37 (Except Double Cab)

: JUNCTION BLOCK AND WIRE HARNESS CONNECTOR

Code	See Page	Junction Block and Wire Harness (Connector Location)
1G	23	Cowl Wire and J/B No.1 (Lower Finish Panel)
3B	24	Cowl Wire and J/B No.3 (Behind the Instrument Panel Left)
3G	26	Cowl Wire and J/B No.3 (Behind the Instrument Panel Center)

: CONNECTOR JOINING WIRE HARNESS AND WIRE HARNESS

Code	See Page	Joining Wire Harness and Wire Harness (Connector Location)
IH1	44	Front Door LH Wire and Cowl Wire (Left Kick Panel)
IH2		
IH3		
IL1	44	Front Door RH Wire and Cowl Wire (Right Kick Panel)

: GROUND POINTS

Code	See Page	Ground Points Location
IE	44	Around the Right Edge of the Reinforcement
IG	44	Around the Left Edge of the Reinforcement

: SPLICE POINTS

Code	See Page	Wire Harness with Splice Points	Code	See Page	Wire Harness with Splice Points
I9	44	Cowl Wire	I20	44	Front Door LH Wire

REMOTE CONTROL MIRROR (w/o POWER WINDOW)

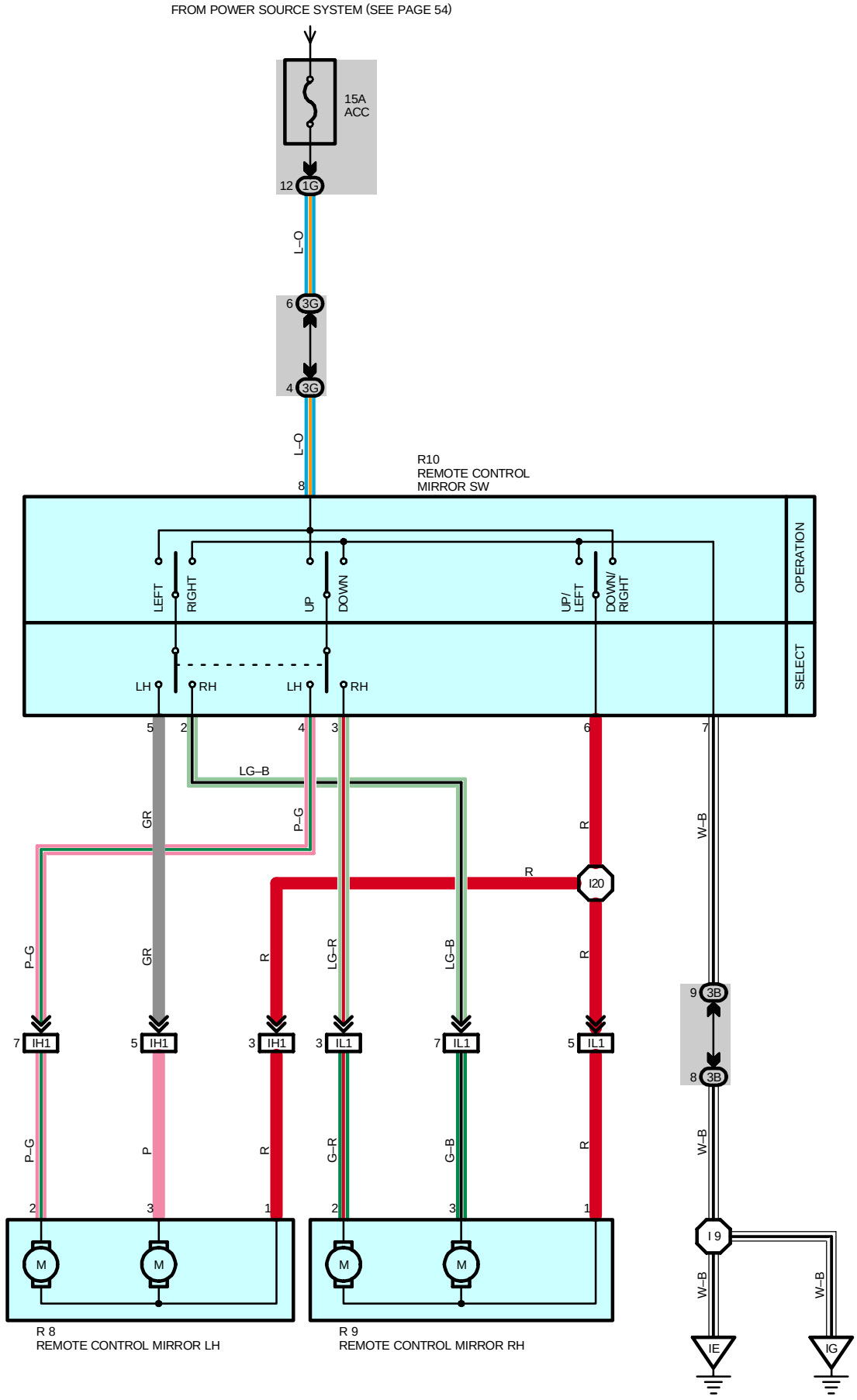

SERVICE HINTS

R10 REMOTE CONTROL MIRROR SW

8–GROUND : Approx. **12** volts with ignition SW at **ACC** or **ON** position
6–7 : Continuity with operation SW at **UP** or **LEFT** position
8–6 : Continuity with operation SW at **DOWN** or **RIGHT** position

: PARTS LOCATION

Code	See Page	Code	See Page	Code	See Page
R8	36 (Double Cab)	R9	36 (Double Cab)	R10	36 (Double Cab)
	37 (Except Double Cab)		37 (Except Double Cab)		37 (Except Double Cab)

: JUNCTION BLOCK AND WIRE HARNESS CONNECTOR

Code	See Page	Junction Block and Wire Harness (Connector Location)
1G	23	Cowl Wire and J/B No.1 (Lower Finish Panel)
3B	24	Cowl Wire and J/B No.3 (Behind the Instrument Panel Left)
3G	26	Cowl Wire and J/B No.3 (Behind the Instrument Panel Center)

: CONNECTOR JOINING WIRE HARNESS AND WIRE HARNESS

Code	See Page	Joining Wire Harness and Wire Harness (Connector Location)
IH1	44	Front Door LH Wire and Cowl Wire (Left Kick Panel)
IL1	44	Front Door RH Wire and Cowl Wire (Right Kick Panel)

: GROUND POINTS

Code	See Page	Ground Points Location
IE	44	Around the Right Edge of the Reinforcement
IG	44	Around the Left Edge of the Reinforcement

: SPLICE POINTS

Code	See Page	Wire Harness with Splice Points	Code	See Page	Wire Harness with Splice Points
I9	44	Cowl Wire	I20	44	Front Door LH Wire

WIPER AND WASHER (w/ INT TIME SW MECHANISM)

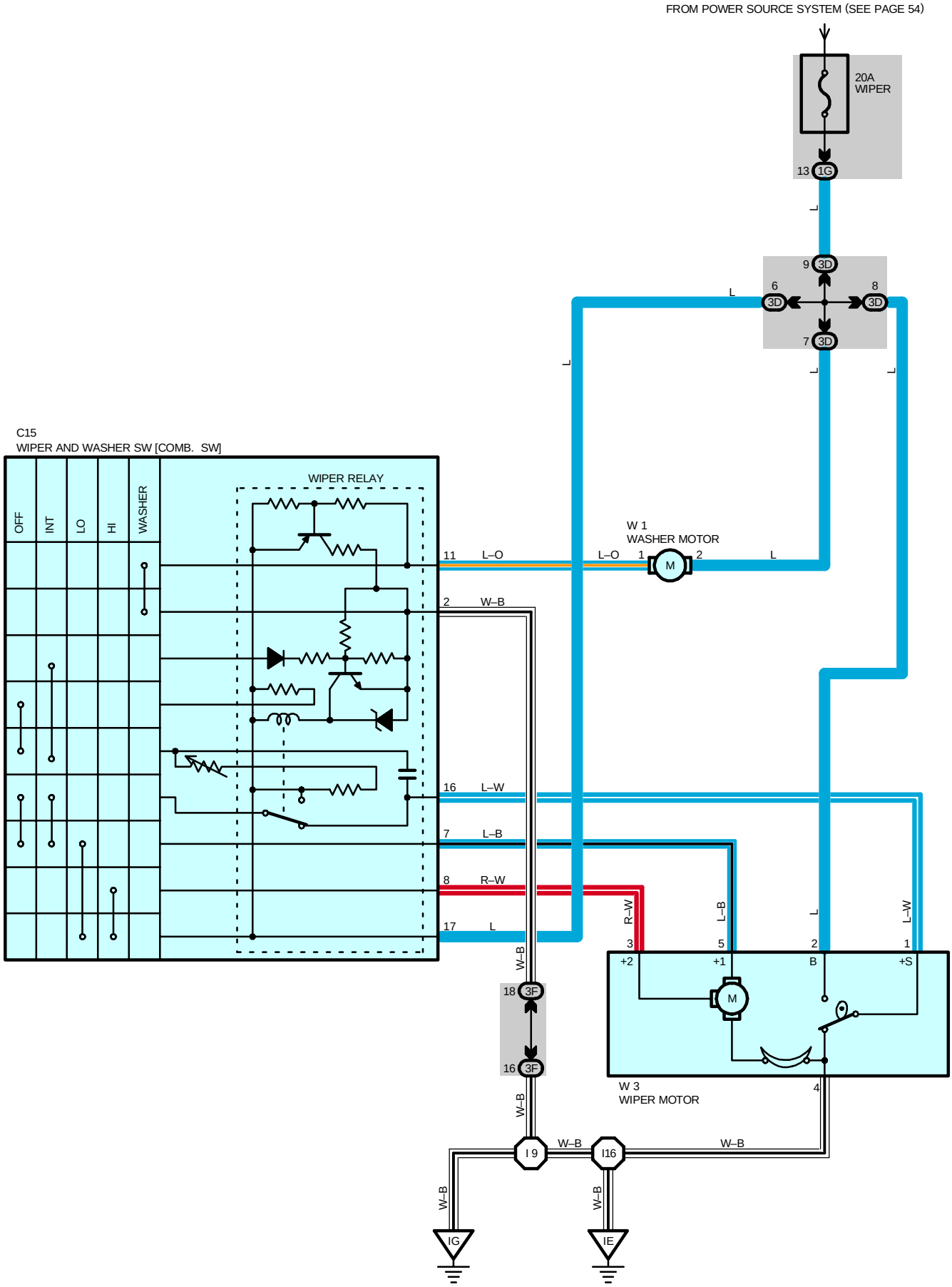

SYSTEM OUTLINE

With the ignition SW turned on, current flows to TERMINAL 17 of the wiper and washer SW, TERMINAL 2 of the washer motor and TERMINAL 2 of the wiper motor through the WIPER fuse.

1. LOW SPEED POSITION

With wiper SW turned to LOW position, current flows from TERMINAL 17 of the wiper and washer SW to TERMINAL 7 to TERMINAL 5 of the wiper motor to TERMINAL 4 to GROUND and causes the wiper motor to run at low speed.

2. HIGH SPEED POSITION

With wiper SW turned to HIGH position, current flows from TERMINAL 17 of the wiper and washer SW to TERMINAL 8 to TERMINAL 3 of the wiper motor to TERMINAL 4 to GROUND and causes the motor to run at high speed.

3. INT POSITION

With wiper SW turned to INT position, the relay operates and the current which is connected by relay function flows from TERMINAL 17 of the wiper and washer SW to TERMINAL 2 to GROUND. This flowing the intermittent circuit and current flows from TERMINAL 17 of the wiper and washer SW to TERMINAL 7 to TERMINAL 5 of the wiper motor to TERMINAL 4 to GROUND and the wiper functions.

The intermittent operation is controlled by charging and discharging of the condenser installed in the relay and the intermittent time is controlled by a time control SW to change the charging time of the condenser.

4. WASHER CONTINUOUS OPERATION

With the washer SW turned to on, current flows from TERMINAL 2 of the washer motor to TERMINAL 1 to TERMINAL 11 of the wiper and washer SW to TERMINAL 2 to GROUND and causes to the washer motor to run, and the window washer is jetted.

This causes current to flow to washer continuous operation circuit in TERMINAL 17 of the wiper and washer SW to TERMINAL 7 to TERMINAL 5 of the wiper motor to TERMINAL 4 to GROUND and the wiper functions.

SERVICE HINTS

C15 WIPER AND WASHER SW [COMB. SW]

2–GROUND : Always continuity
17–GROUND : Approx. **12** volts with ignition SW at **ON** position
7–GROUND : Approx. **12** volts with wiper and washer SW at **LOW** position
Approx. **12** volts every **3** to **12** seconds intermittently with wiper SW at **INT** position
16–GROUND : Approx. **12** volts with ignition SW on unless wiper motor at **STOP** position
8–GROUND : Approx. **12** volts with ignition SW on and wiper and washer SW at **HIGH** position
11–2 : Continuity with washer SW on

W3 WIPER MOTOR

1–2 : Closed unless wiper motor at **STOP** position

○ : PARTS LOCATION

Code	See Page	Code	See Page	Code	See Page
C15	34	W1	33 (3RZ–FE, 2RZ–FE)	W3	33 (3RZ–FE, 2RZ–FE)
W1	31 (5VZ–FE)	W3	31 (5VZ–FE)		

⬭ : JUNCTION BLOCK AND WIRE HARNESS CONNECTOR

Code	See Page	Junction Block and Wire Harness (Connector Location)
1G	23	Cowl Wire and J/B No.1 (Lower Finish Panel)
3D	24	Cowl Wire and J/B No.3 (Behind the Instrument Panel Left)
3F		

▽ : GROUND POINTS

Code	See Page	Ground Points Location
IE	44	Around the Right Edge of the Reinforcement
IG	44	Around the Left Edge of the Reinforcement

⯃ : SPLICE POINTS

Code	See Page	Wire Harness with Splice Points	Code	See Page	Wire Harness with Splice Points
I9	44	Cowl Wire	I16	44	Cowl Wire

WIPER AND WASHER (w/o INT TIME SW MECHANISM)

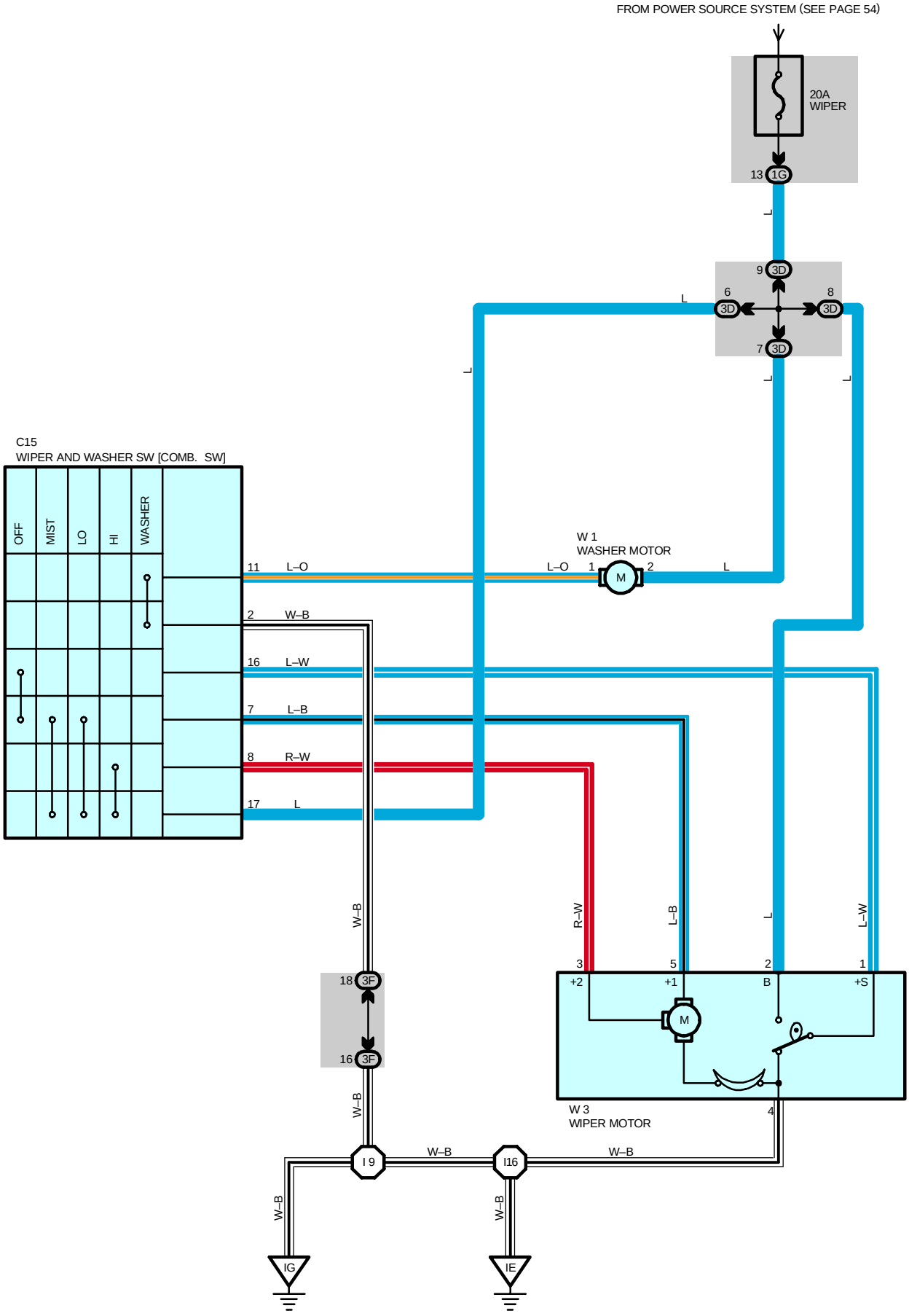

SYSTEM OUTLINE

With the ignition SW turned on, current flows to TERMINAL 17 of the wiper and washer SW, TERMINAL 2 of the washer motor and TERMINAL 2 of the wiper motor through the WIPER fuse.

1. LOW SPEED POSITION

With wiper SW turned to LOW position, current flows from TERMINAL 17 of the wiper and washer SW to TERMINAL 7 to TERMINAL 5 of the wiper motor to TERMINAL 4 to GROUND and causes the wiper motor to run at low speed.

2. HIGH SPEED POSITION

With wiper SW turned to HIGH position, current flows from TERMINAL 17 of the wiper and washer SW to TERMINAL 8 to TERMINAL 3 of the wiper motor to TERMINAL 4 to GROUND and causes the motor to run at high speed.

3. MIST POSITION

With the wiper SW turned to MIST position, current flows from TERMINAL 17 of the wiper and washer SW to TERMINAL 7 to TERMINAL 5 of the wiper motor to TERMINAL 4 to GROUND and causes the wiper motor to run at low speed.

4. WASHER CONTINUOUS OPERATION

With the washer SW turned to on, current flows from TERMINAL 2 of the washer motor to TERMINAL 1 to TERMINAL 11 of the wiper and washer SW to TERMINAL 2 to GROUND and causes to the washer motor to run, and the window washer is jetted.

SERVICE HINTS

C15 WIPER AND WASHER SW [COMB. SW]

2–GROUND : Always continuity
17–GROUND : Approx. **12** volts with ignition SW at **ON** position
7–GROUND : Approx. **12** volts with wiper and washer SW at **LOW** or **MIST** position
16–GROUND : Approx. **12** volts with ignition SW on unless wiper motor at **STOP** position
8–GROUND : Approx. **12** volts with ignition SW on and wiper and washer SW at **HIGH** position
11–2 : Continuity with washer SW on

W3 WIPER MOTOR

1–2 : Closed unless wiper motor at **STOP** position

: PARTS LOCATION

Code	See Page	Code	See Page	Code	See Page
C15	34	W1	33 (3RZ–FE, 2RZ–FE)	W3	33 (3RZ–FE, 2RZ–FE)
W1	31 (5VZ–FE)	W3	31 (5VZ–FE)		

: JUNCTION BLOCK AND WIRE HARNESS CONNECTOR

Code	See Page	Junction Block and Wire Harness (Connector Location)
1G	23	Cowl Wire and J/B No.1 (Lower Finish Panel)
3D	24	Cowl Wire and J/B No.3 (Behind the Instrument Panel Left)
3F		

: GROUND POINTS

Code	See Page	Ground Points Location
IE	44	Around the Right Edge of the Reinforcement
IG	44	Around the Left Edge of the Reinforcement

: SPLICE POINTS

Code	See Page	Wire Harness with Splice Points	Code	See Page	Wire Harness with Splice Points
I9	44	Cowl Wire	I16	44	Cowl Wire

KEY REMINDER AND SEAT BELT WARNING

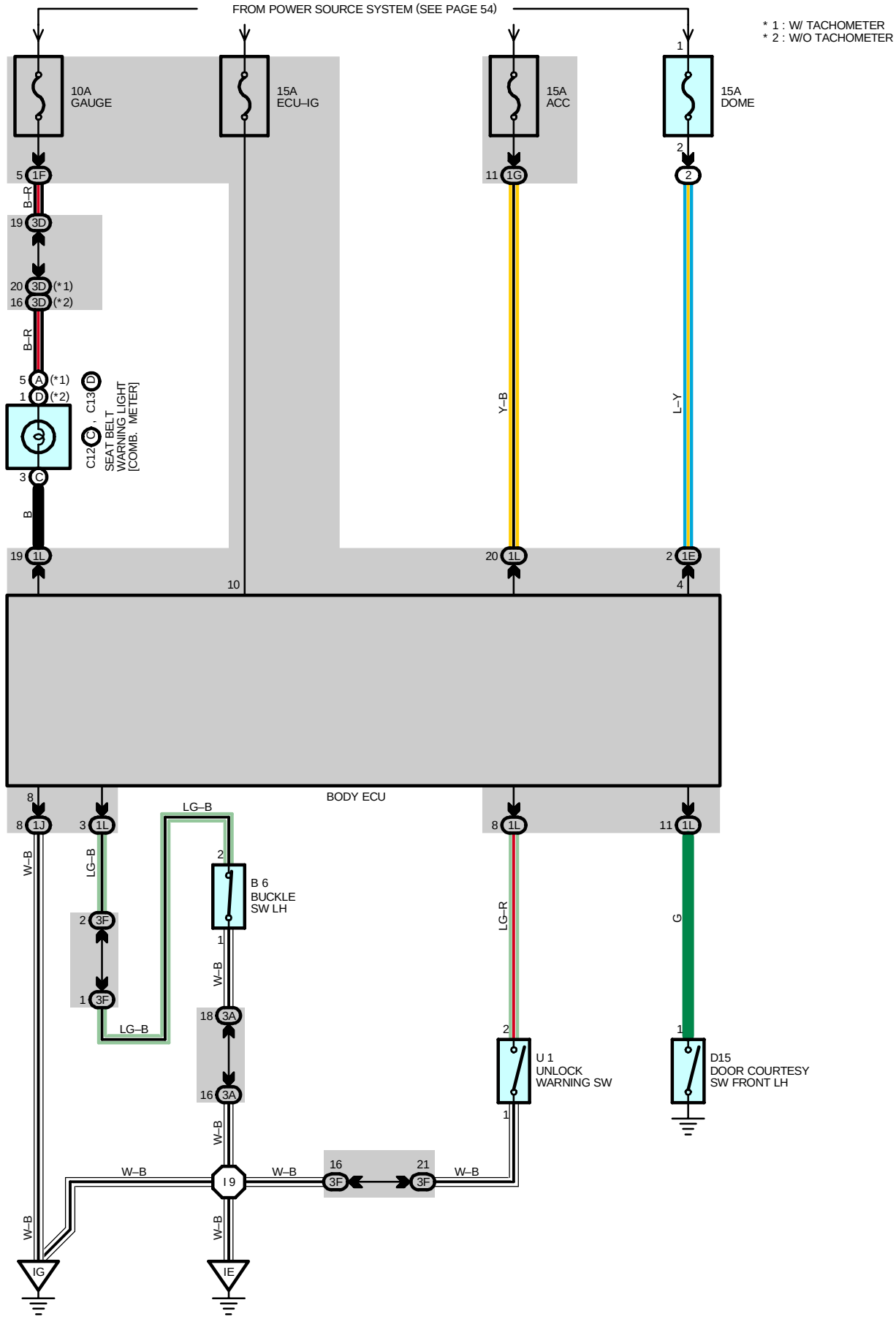

SYSTEM OUTLINE

Current always flows to TERMINAL 4 of the body ECU through the DOME fuse.

1. SEAT BELT WARNING SYSTEM

When the ignition SW is turned on, current flows from the ECU–IG fuse to TERMINAL 10 of the body ECU. At the same time, current flows to the ECU from the GAUGE fuse through the seat belt warning light. This current activates the body ECU and, for approx. 4–8 seconds, the current flowing through the warning light flows from ECU to TERMINAL 8 to GROUND, causing the warning light to light up. At the same time as the warning light lights up, a buckle SW LH on signal is input to the body ECU, the current flowing from TERMINAL 4 of the body ECU flows to TERMINAL 8 to GROUND and the seat belt warning buzzer sounds for approx. 4-8 seconds. However, if the seat belt is put on (Buckle SW LH off) during this period (While the buzzer is sounding), a signal input to the body ECU stops and the current flowing from TERMINAL 4 of the body ECU to TERMINAL 8 to GROUND is cut, causing the buzzer to stop.

2. KEY REMINDER SYSTEM

With the ignition key inserted in the key cylinder (Unlock warning SW on), the ignition SW still off and front LH door open (Door courtesy SW on), a signal is input to the body ECU, the body ECU operates and current flows from TERMINAL 10 of the ECU to TERMINAL 8 to GROUND and the key reminder buzzer sounds.

SERVICE HINTS

B6 BUCKLE SW LH

1–2 : Open with driver's seat belt in use

D15 DOOR COURTESY SW FRONT LH

1–GROUND : Closed with LH door open

BODY ECU

10–GROUND : Approx. **12** volts with ignition SW on
4–GROUND : Always approx. **12** volts
8–GROUND : Always continuity

: PARTS LOCATION

Code	See Page	Code		See Page	Code	See Page
B6	36 (Double Cab)	C12	C	34	D15	34
	37 (Except Double Cab)	C13	D	34	U1	35

: RELAY BLOCKS

Code	See Page	Relay Blocks (Relay Block Location)
2	21	R/B No.2 (Engine Compartment Left)

: JUNCTION BLOCK AND WIRE HARNESS CONNECTOR

Code	See Page	Junction Block and Wire Harness (Connector Location)
1E	23	Engine Room Main Wire and J/B No.1 (Lower Finish Panel)
1F	23	Cowl Wire and J/B No.1 (Lower Finish Panel)
1G		
1J		
1L	22	
3A	24	Cowl Wire and J/B No.3 (Behind the Instrument Panel Left)
3D		
3F		

: GROUND POINTS

Code	See Page	Ground Points Location
IE	44	Around the Right Edge of the Reinforcement
IG	44	Around the Left Edge of the Reinforcement

: SPLICE POINTS

Code	See Page	Wire Harness with Splice Points	Code	See Page	Wire Harness with Splice Points
I9	44	Cowl Wire			

POWER OUTLET

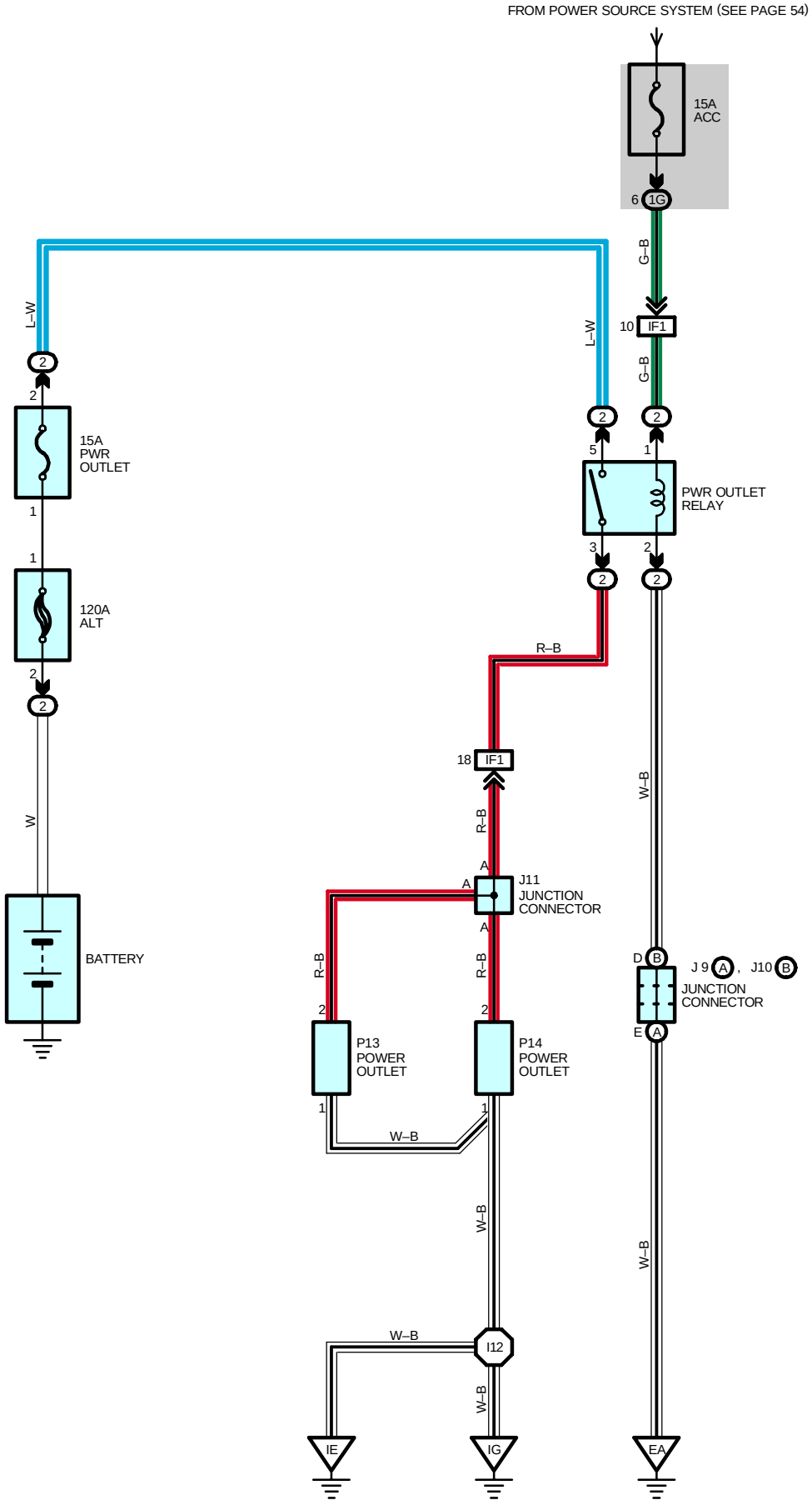

SERVICE HINTS

P13, P14 POWER OUTLET

2–GROUND : Approx. **12** volts with the ignition SW at **ACC** or **ON** position

1–GROUND : Always continuity

: PARTS LOCATION

Code		See Page	Code		See Page	Code	See Page
J9	A	31 (5VZ–FE)	J10	B	33 (3RZ–FE, 2RZ–FE)	P14	35
		33 (3RZ–FE, 2RZ–FE)	J11		35		
J10	B	31 (5VZ–FE)	P13		35		

: RELAY BLOCKS

Code	See Page	Relay Blocks (Relay Block Location)
2	21	R/B No.2 (Engine Compartment Left)

: JUNCTION BLOCK AND WIRE HARNESS CONNECTOR

Code	See Page	Junction Block and Wire Harness (Connector Location)
1G	23	Cowl Wire and J/B No.1 (Lower Finish Panel)

: CONNECTOR JOINING WIRE HARNESS AND WIRE HARNESS

Code	See Page	Joining Wire Harness and Wire Harness (Connector Location)
IF1	44	Engine Room Main Wire and Cowl Wire (Left Kick Panel)

: GROUND POINTS

Code	See Page	Ground Points Location
EA	40 (5VZ–FE)	Front Left Fender
	42 (3RZ–FE, 2RZ–FE)	
IE	44	Around the Right Edge of the Reinforcement
IG	44	Around the Left Edge of the Reinforcement

: SPLICE POINTS

Code	See Page	Wire Harness with Splice Points	Code	See Page	Wire Harness with Splice Points
I12	44	Cowl Wire			

CIGARETTE LIGHTER AND CLOCK

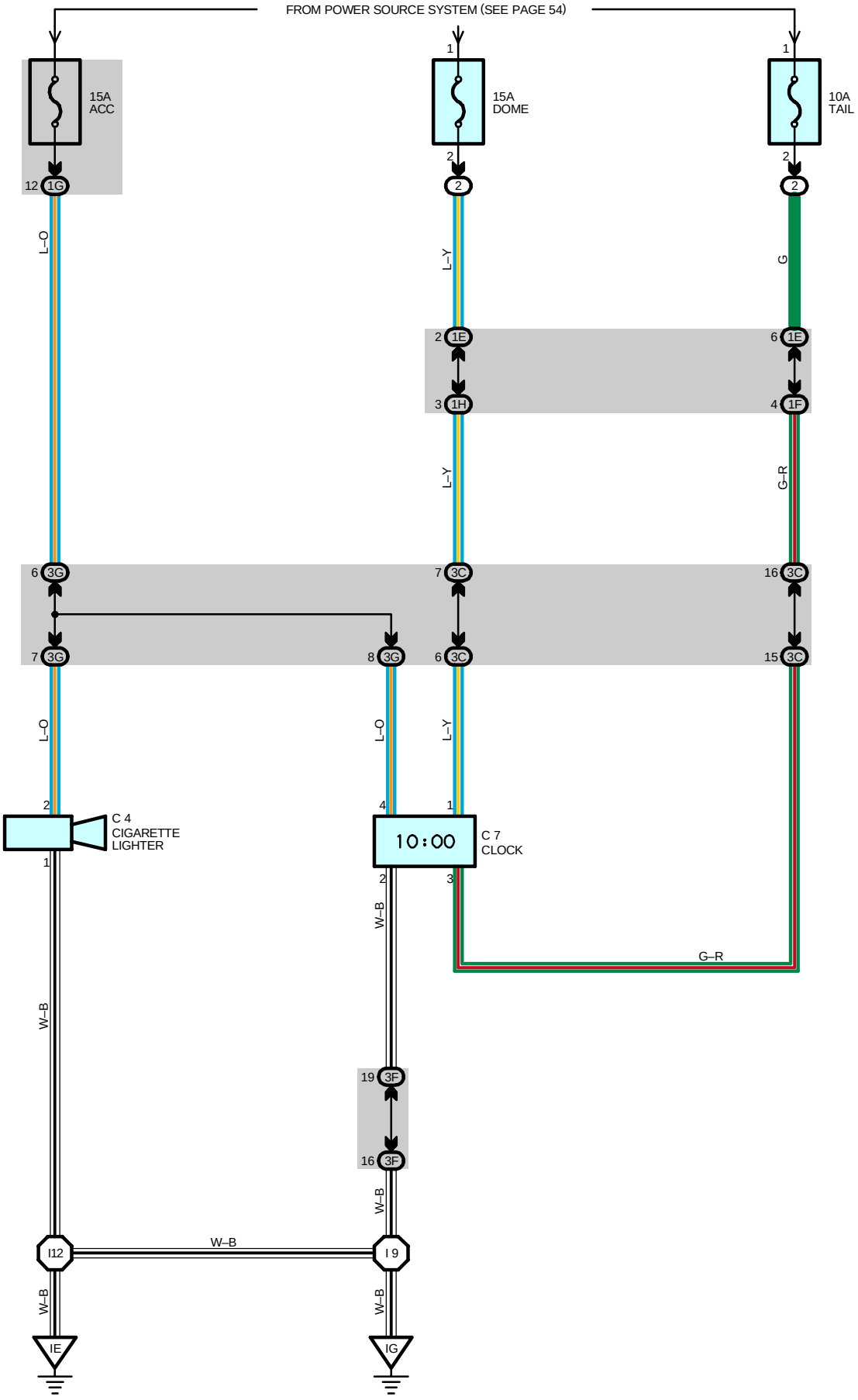

SERVICE HINTS

C4 CIGARETTE LIGHTER

2–GROUND : Approx. **12** volts with ignition SW at **ON** and **ACC** position
1–GROUND : Always continuity

C7 CLOCK

1–GROUND : Always approx. **12** volts (Power for clock)
4–GROUND : Approx. **12** volts with ignition SW at **ON** or **ACC** position (Power for indication)
3–GROUND : Approx. **12** volts with light control SW at **TAIL** or **HEAD** position (Signal of indication)
2–GROUND : Always continuity

: PARTS LOCATION

Code	See Page	Code	See Page	Code	See Page
C4	34	C7	34		

: RELAY BLOCKS

Code	See Page	Relay Blocks (Relay Block Location)
2	21	R/B No.2 (Engine Compartment Left)

: JUNCTION BLOCK AND WIRE HARNESS CONNECTOR

Code	See Page	Junction Block and Wire Harness (Connector Location)
1E	23	Engine Room Main Wire and J/B No.1 (Lower Finish Panel)
1F	23	Cowl Wire and J/B No.1 (Lower Finish Panel)
1G		
1H		
3C	24	Cowl Wire and J/B No.3 (Behind the Instrument Panel Left)
3F		
3G	26	Cowl Wire and J/B No.3 (Behind the Instrument Panel Center)

: GROUND POINTS

Code	See Page	Ground Points Location
IE	44	Around the Right Edge of the Reinforcement
IG	44	Around the Left Edge of the Reinforcement

: SPLICE POINTS

Code	See Page	Wire Harness with Splice Points	Code	See Page	Wire Harness with Splice Points
I9	44	Cowl Wire	I12	44	Cowl Wire

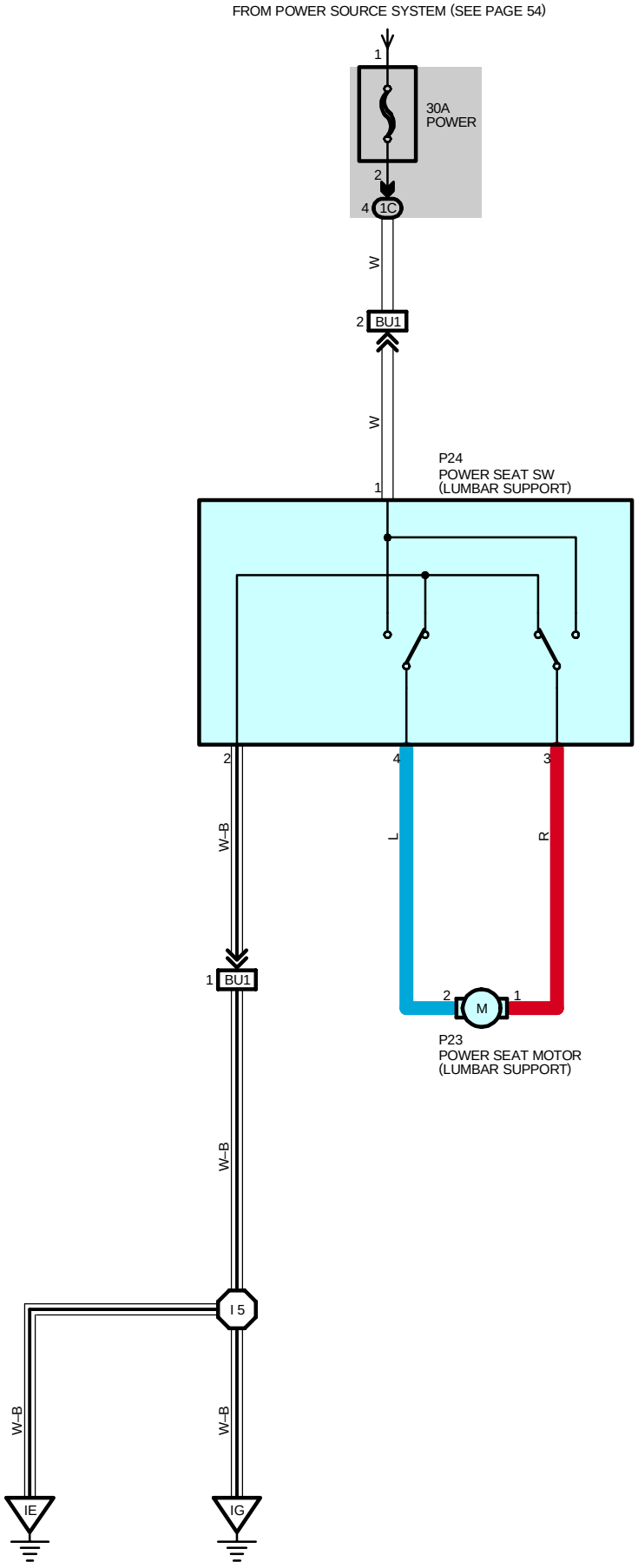
FROM POWER SOURCE SYSTEM (SEE PAGE 54)
1
30A
POWER
2
4
1C
W
2
BU1
W
P24
POWER SEAT SW
(LUMBAR SUPPORT)
1
2
4
3
W–B
L
R
1
BU1
2
M
1
P23
POWER SEAT MOTOR
(LUMBAR SUPPORT)
W–B
I 5
W–B
W–B
IE
IG

SERVICE HINTS

P24 POWER SEAT SW (LUMBAR SUPPORT)

1–GROUND : Always approx. **12** volts

2–GROUND : Always continuity

: PARTS LOCATION

Code	See Page	Code	See Page	Code	See Page
P23	38	P24	38		

: JUNCTION BLOCK AND WIRE HARNESS CONNECTOR

Code	See Page	Junction Block and Wire Harness (Connector Location)
1C	23	Cowl Wire and J/B No.1 (Lower Finish Panel)

: CONNECTOR JOINING WIRE HARNESS AND WIRE HARNESS

Code	See Page	Joining Wire Harness and Wire Harness (Connector Location)
BU1	50	Cowl Wire and Seat No.1 Wire (Under the Driver's Seat)

: GROUND POINTS

Code	See Page	Ground Points Location
IE	44	Around the Right Edge of the Reinforcement
IG	44	Around the Left Edge of the Reinforcement

: SPLICE POINTS

Code	See Page	Wire Harness with Splice Points	Code	See Page	Wire Harness with Splice Points
I5	44	Cowl Wire			

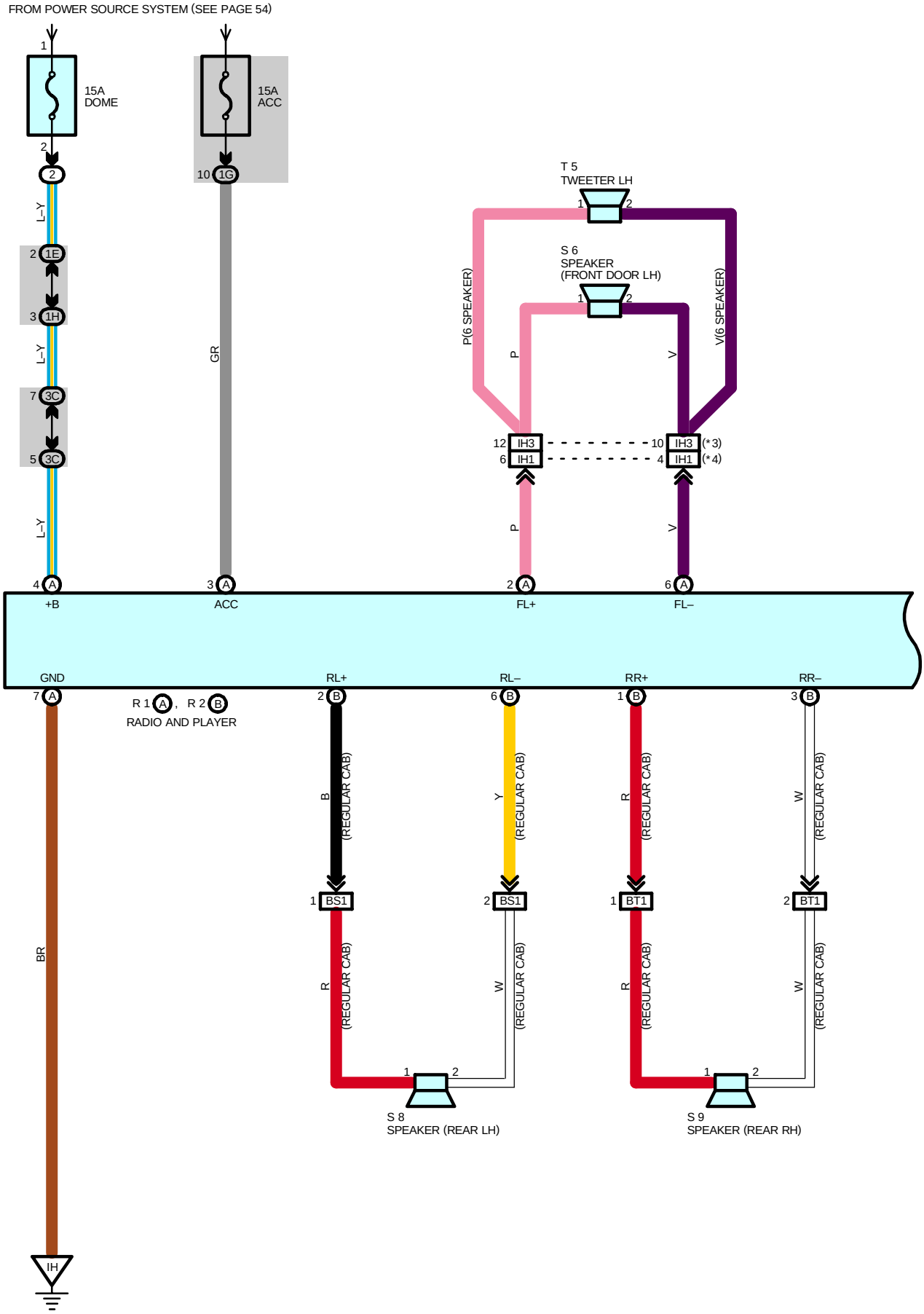
FROM POWER SOURCE SYSTEM (SEE PAGE 54)
15A
DOME
15A
ACC
T 5
TWEETER LH
S 6
SPEAKER
(FRONT DOOR LH)
P(6 SPEAKER)
V(6 SPEAKER)
L–Y
GR
P
V
IH3
IH1
(*3)
(*4)
+B
ACC
FL+
FL–
GND
R 1 A , R 2 B
RADIO AND PLAYER
RL+
RL–
RR+
RR–
B
Y
R
W
(REGULAR CAB)
BS1
BT1
BR
IH
S 8
SPEAKER (REAR LH)
S 9
SPEAKER (REAR RH)

* 1 : W/ POWER WINDOW
* 2 : W/O POWER WINDOW
* 3 : DOUBLE CAB
* 4 : EXCEPT DOUBLE CAB

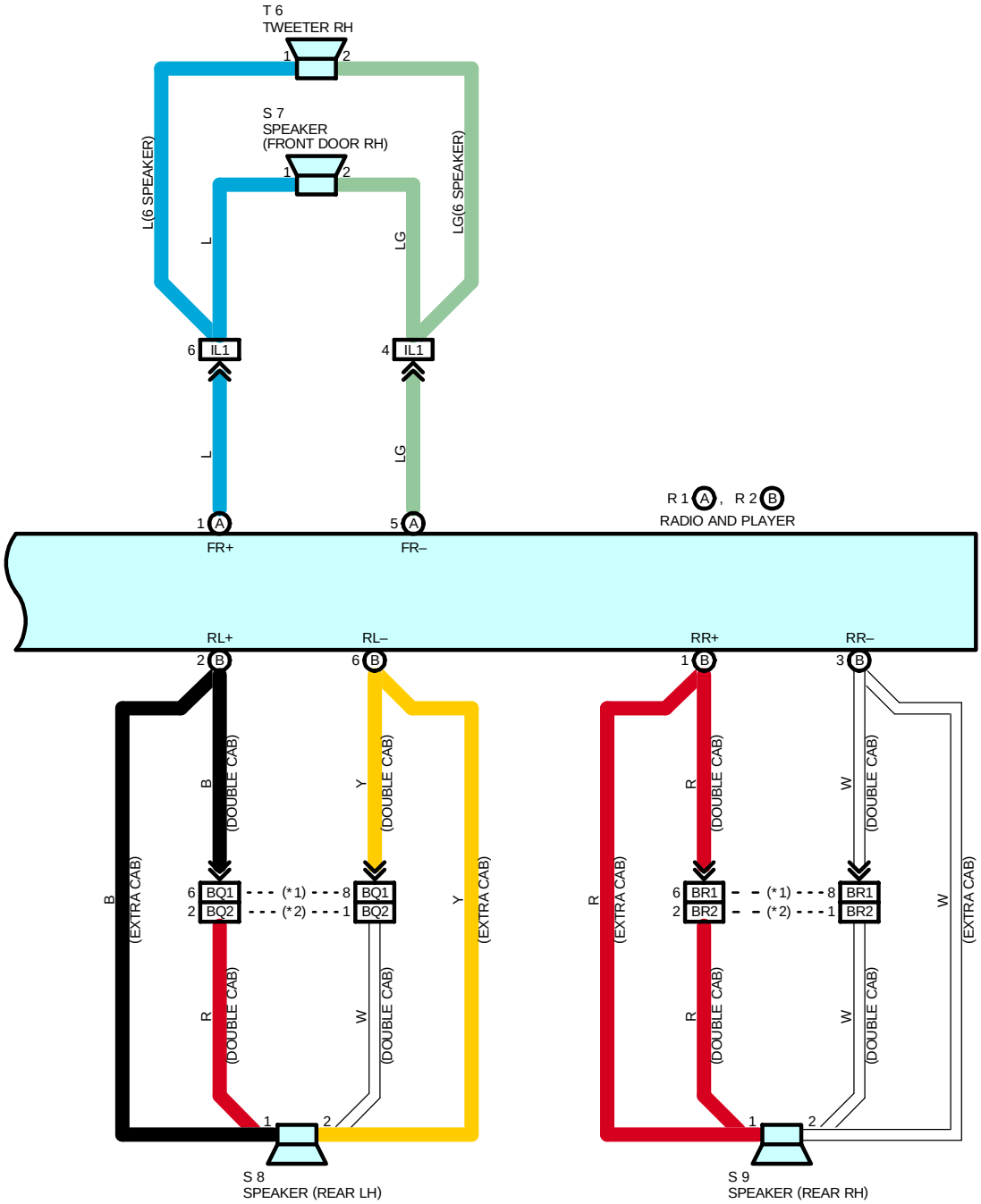

RADIO AND PLAYER

SERVICE HINTS

R1 (A) RADIO AND PLAYER

(A) 3–GROUND : Approx. **12** volts with ignition SW at **ON** or **ACC** position
(A) 4–GROUND : Always approx. **12** volts
(A) 7–GROUND : Always continuity

: PARTS LOCATION

Code		See Page	Code	See Page	Code	See Page
R1	A	35	S7	37 (Except Double Cab)	T5	36 (Double Cab)
R2	B	35	S8	36 (Double Cab)		37 (Except Double Cab)
S6		36 (Double Cab)		37 (Except Double Cab)	T6	36 (Double Cab)
		37 (Except Double Cab)	S9	36 (Double Cab)		37 (Except Double Cab)
S7		36 (Double Cab)		37 (Except Double Cab)		

: RELAY BLOCKS

Code	See Page	Relay Blocks (Relay Block Location)
2	21	R/B No.2 (Engine Compartment Left)

: JUNCTION BLOCK AND WIRE HARNESS CONNECTOR

Code	See Page	Junction Block and Wire Harness (Connector Location)
1E	23	Engine Room Main Wire and J/B No.1 (Lower Finish Panel)
1G	23	Cowl Wire and J/B No.1 (Lower Finish Panel)
1H		
3C	24	Cowl Wire and J/B No.3 (Behind the Instrument Panel Left)

: CONNECTOR JOINING WIRE HARNESS AND WIRE HARNESS

Code	See Page	Joining Wire Harness and Wire Harness (Connector Location)
IH1	44	Front Door LH Wire and Cowl Wire (Left Kick Panel)
IH3		
IL1	44	Front Door RH Wire and Cowl Wire (Right Kick Panel)
BQ1	46 (Double Cab)	Rear Door No.2 Wire and Cowl Wire (Under the Left Center Pillar)
BQ2		
BR1	46 (Double Cab)	Rear Door No.1 Wire and Cowl Wire (Under the Right Center Pillar)
BR2		
BS1	48 (Except Double Cab)	Rear Speaker LH Wire and Cowl Wire (Under the Left Center Pillar)
BT1	48 (Except Double Cab)	Rear Speaker RH Wire and Cowl Wire (Under the Right Center Pillar)

: GROUND POINTS

Code	See Page	Ground Points Location
IH	44	Right Kick Panel

COMBINATION METER (w/ TACHOMETER)

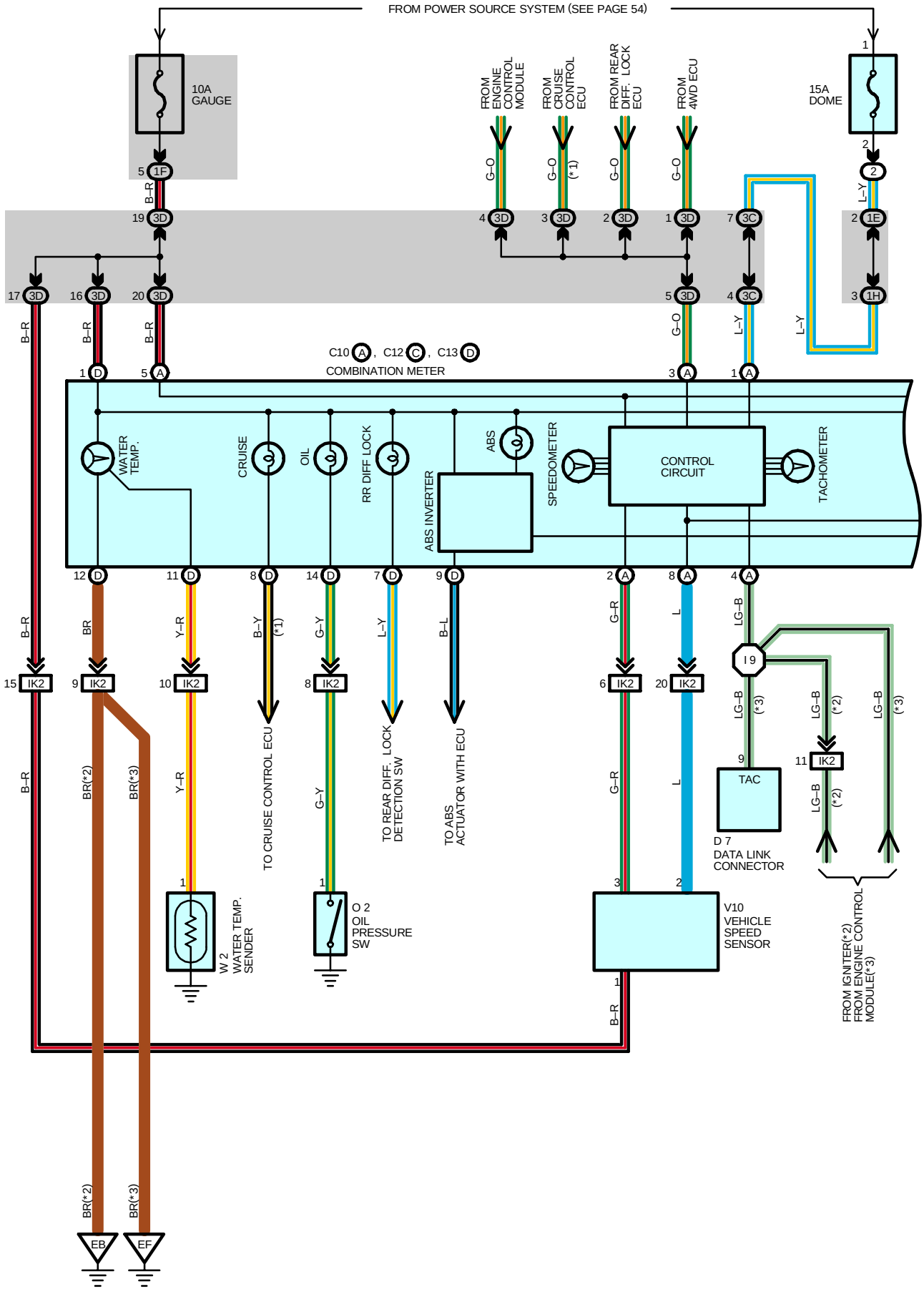

* 1 : W/ CRUISE CONTROL
* 2 : 5VZ–FE
* 3 : 3RZ–FE, 2RZ–FE

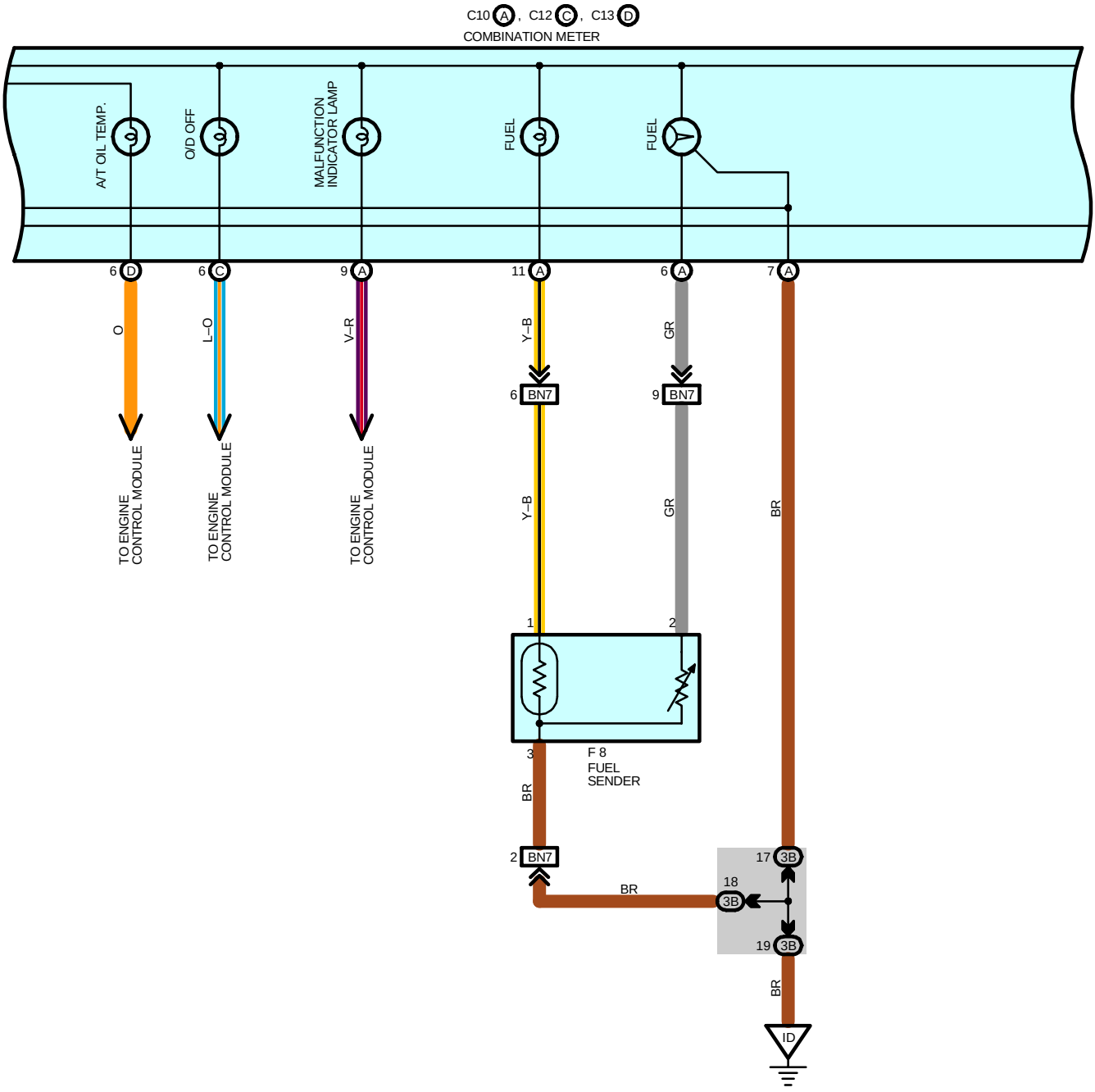

COMBINATION METER (w/ TACHOMETER)

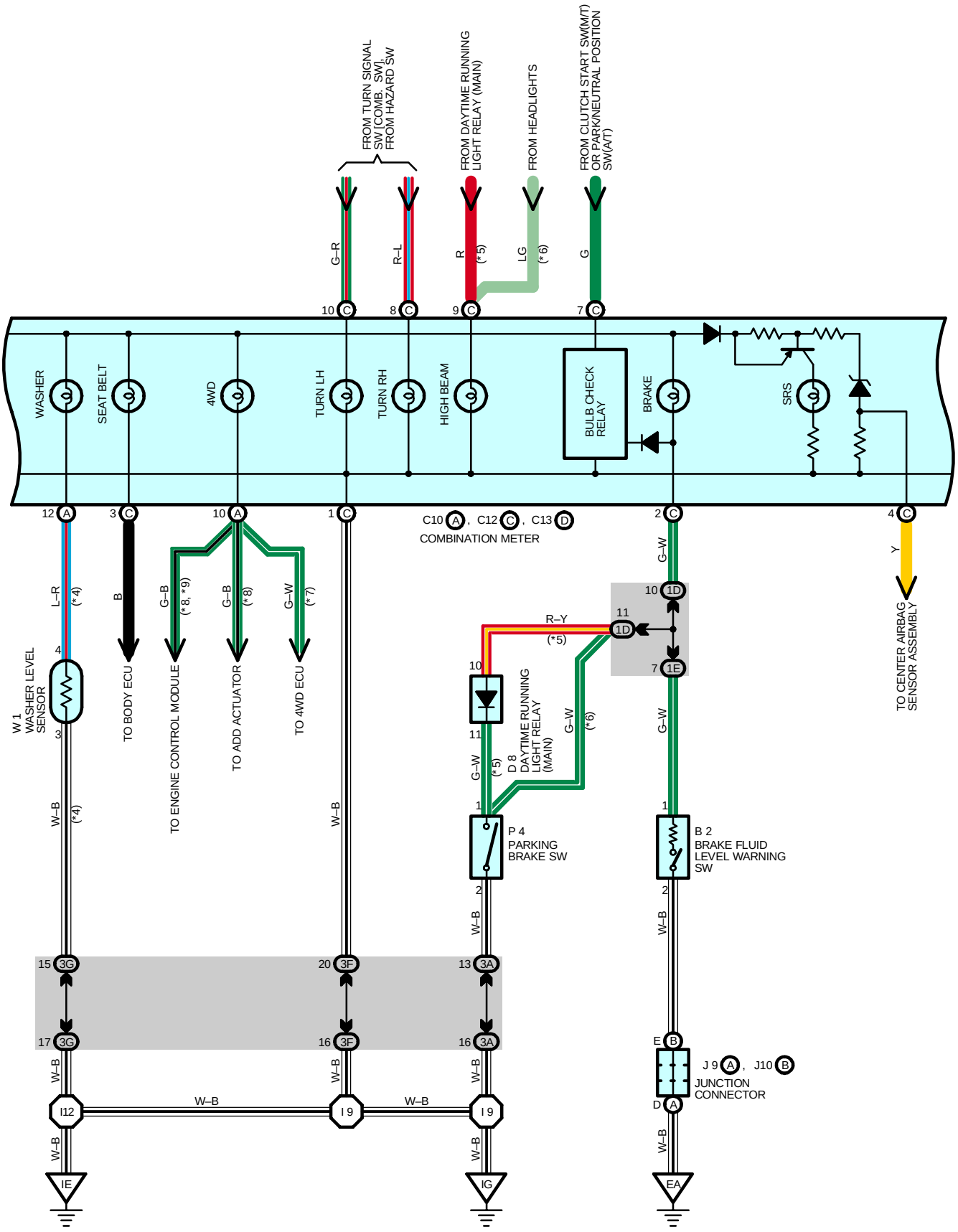

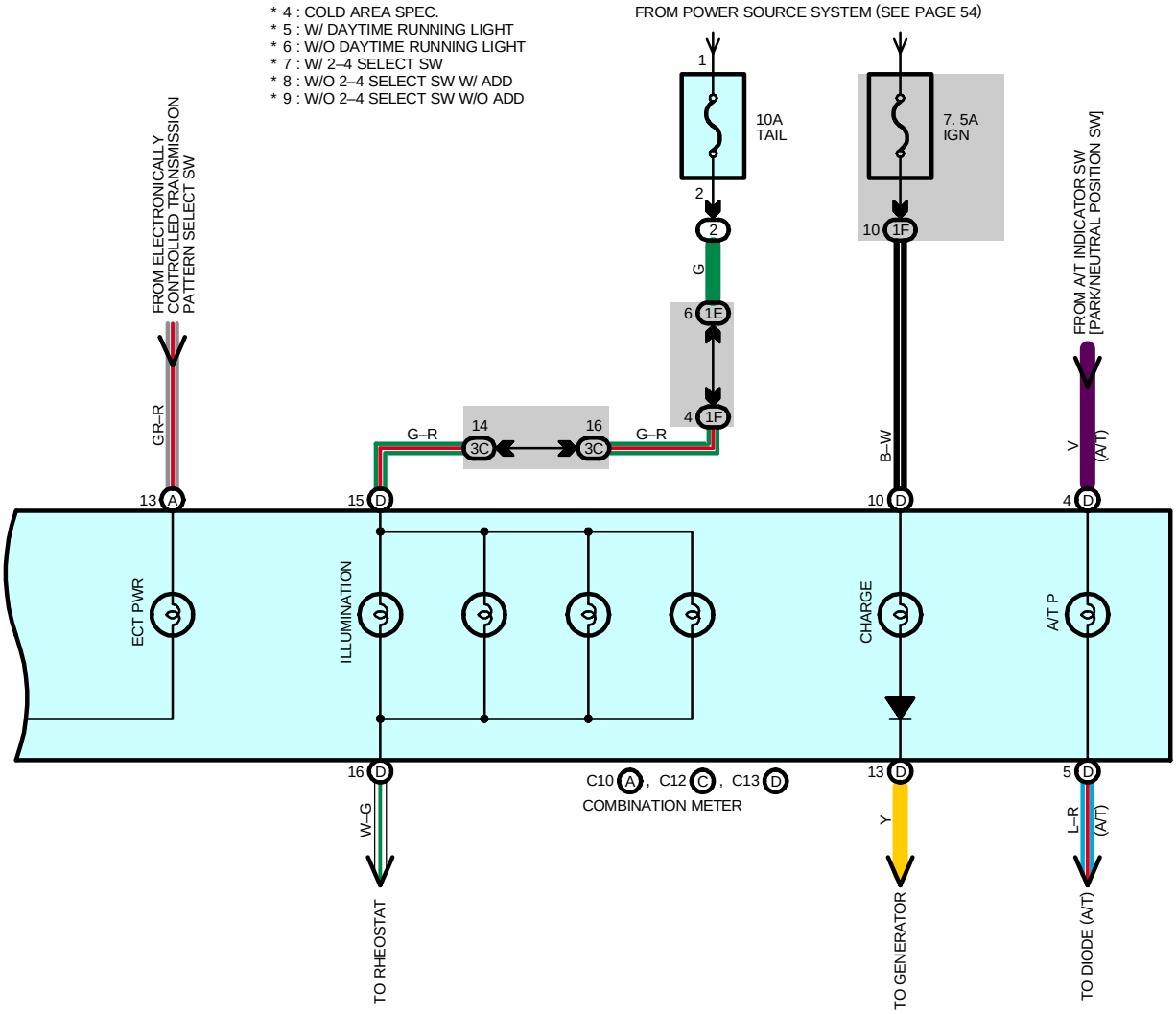
* 4 : COLD AREA SPEC.
* 5 : W/ DAYTIME RUNNING LIGHT
* 6 : W/O DAYTIME RUNNING LIGHT
* 7 : W/ 2–4 SELECT SW
* 8 : W/O 2–4 SELECT SW W/ ADD
* 9 : W/O 2–4 SELECT SW W/O ADD
FROM POWER SOURCE SYSTEM (SEE PAGE 54)
1
10A
TAIL
2
2
G
6 1E
4 1F
7. 5A
IGN
10 1F
B–W
FROM A/T INDICATOR SW
[PARK/NEUTRAL POSITION SW]
V
(A/T)
4 D
FROM ELECTRONICALLY
CONTROLLED TRANSMISSION
PATTERN SELECT SW
GR–R
13 A
G–R
14
3C
16
3C
G–R
15 D
10 D
ECT PWR
ILLUMINATION
CHARGE
A/T P
16 D
W–G
TO RHEOSTAT
C10 A , C12 C , C13 D
COMBINATION METER
13 D
Y
TO GENERATOR
5 D
L–R
(A/T)
TO DIODE (A/T)

COMBINATION METER (w/ TACHOMETER)

SERVICE HINTS

B2 BRAKE FLUID LEVEL WARNING SW

1–2 : Closed with float down

C10 (A), C12 (C), C13 (D) COMBINATION METER

(A) 5, (D)1–GROUND : Approx. **12** volts with ignition SW on

(A) 7, (C) 1, (D)12–GROUND : Always continuity

P4 PARKING BRAKE SW

1–2 : Closed with parking brake lever pulled up

: PARTS LOCATION

Code		See Page	Code		See Page	Code	See Page
B2		30 (5VZ–FE)	F8		37 (Except Double Cab)	V10	31 (5VZ–FE)
		32 (3RZ–FE, 2RZ–FE)	J9	A	31 (5VZ–FE)		33 (3RZ–FE, 2RZ–FE)
C10	A	34			33 (3RZ–FE, 2RZ–FE)	W1	31 (5VZ–FE)
C12	C	34	J10	B	31 (5VZ–FE)		33 (3RZ–FE, 2RZ–FE)
C13	D	34			33 (3RZ–FE, 2RZ–FE)	W2	31 (5VZ–FE)
D7		34	O2		31 (5VZ–FE)		33 (3RZ–FE, 2RZ–FE)
D8		34			33 (3RZ–FE, 2RZ–FE)		
F8		36 (Double Cab)	P4		35		

: RELAY BLOCKS

Code	See Page	Relay Blocks (Relay Block Location)
2	21	R/B No.2 (Engine Compartment Left)

: JUNCTION BLOCK AND WIRE HARNESS CONNECTOR

Code	See Page	Junction Block and Wire Harness (Connector Location)
1D	23	Cowl Wire and J/B No.1 (Lower Finish Panel)
1E	23	Engine Room Main Wire and J/B No.1 (Lower Finish Panel)
1F	23	Cowl Wire and J/B No.1 (Lower Finish Panel)
1H		
3A	24	Cowl Wire and J/B No.3 (Behind the Instrument Panel Left)
3B		
3C		
3D		
3F		
3G	26	Cowl Wire and J/B No.3 (Behind the Instrument Panel Center)

: CONNECTOR JOINING WIRE HARNESS AND WIRE HARNESS

Code	See Page	Joining Wire Harness and Wire Harness (Connector Location)
IK2	44	Engine Wire and Cowl Wire (Above the Glove Box)
BN7	46 (Double Cab)	Frame Wire and Cowl Wire (Under the Driver's Seat)
	48 (Except Double Cab)	

: GROUND POINTS

Code	See Page	Ground Points Location
EA	40 (5VZ–FE)	Front Left Fender
	42 (3RZ–FE, 2RZ–FE)	
EB	40 (5VZ–FE)	Near the Throttle Body
EF	42 (3RZ–FE, 2RZ–FE)	Ignition Coil Braket
ID	44	Left Kick Panel
IE	44	Around the Right Edge of the Reinforcement
IG	44	Around the Left Edge of the Reinforcement



: SPLICE POINTS

Code	See Page	Wire Harness with Splice Points	Code	See Page	Wire Harness with Splice Points
I9	44	Cowl Wire	I12	44	Cowl Wire

COMBINATION METER (w/o TACHOMETER)

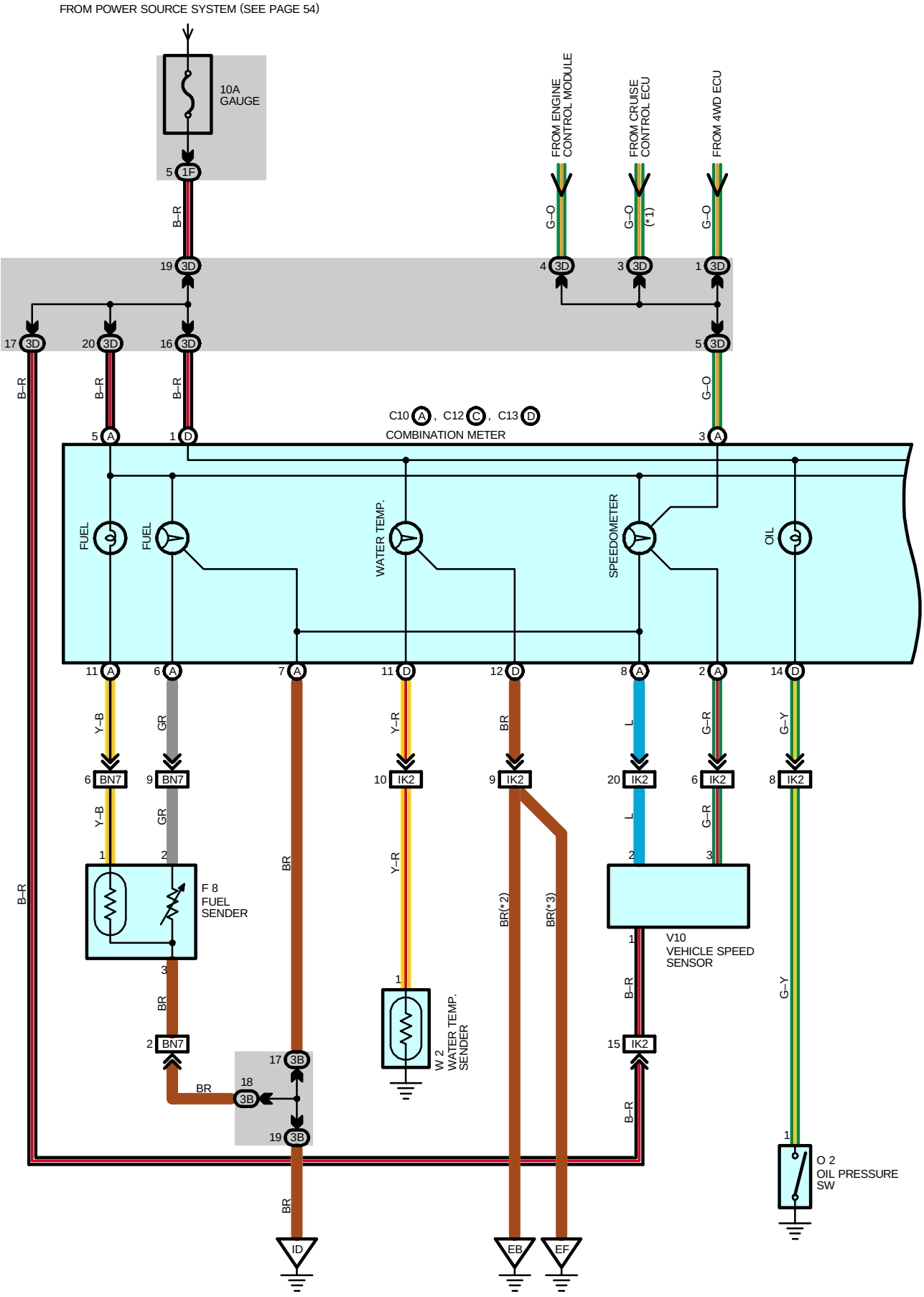

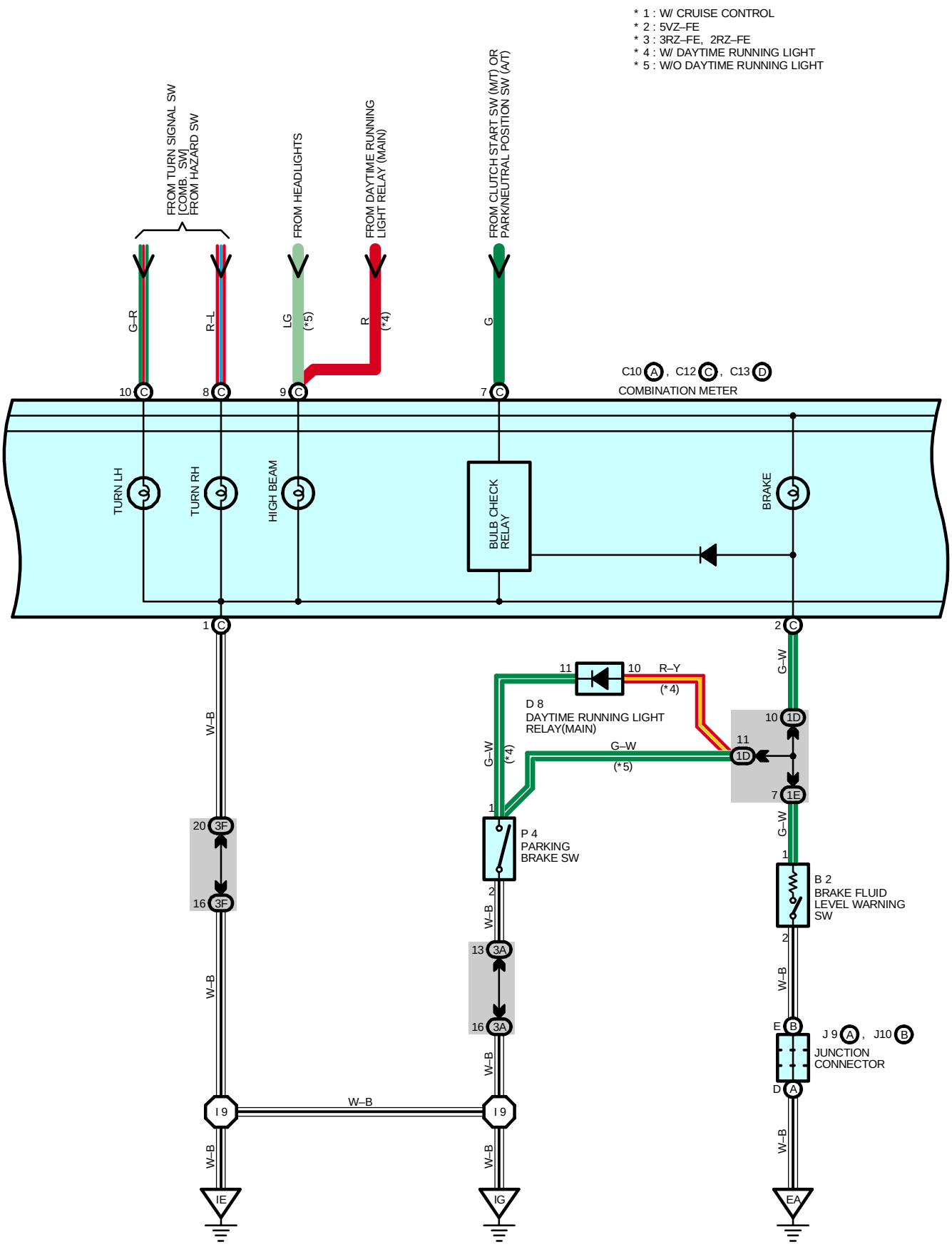
* 1 : W/ CRUISE CONTROL
* 2 : 5VZ–FE
* 3 : 3RZ–FE, 2RZ–FE
* 4 : W/ DAYTIME RUNNING LIGHT
* 5 : W/O DAYTIME RUNNING LIGHT
FROM TURN SIGNAL SW [COMB. SW]
FROM HAZARD SW
FROM HEADLIGHTS
FROM DAYTIME RUNNING LIGHT RELAY (MAIN)
FROM CLUTCH START SW (M/T) OR PARK/NEUTRAL POSITION SW (A/T)
G–R
R–L
LG (*5)
R (*4)
G
C10 A , C12 C , C13 D
COMBINATION METER
TURN LH
TURN RH
HIGH BEAM
BULB CHECK RELAY
BRAKE
D 8
DAYTIME RUNNING LIGHT RELAY(MAIN)
R–Y (*4)
G–W (*4)
G–W (*5)
P 4
PARKING BRAKE SW
B 2
BRAKE FLUID LEVEL WARNING SW
J 9 A , J10 B
JUNCTION CONNECTOR
W–B
I 9
IE
IG
EA

COMBINATION METER (w/o TACHOMETER)

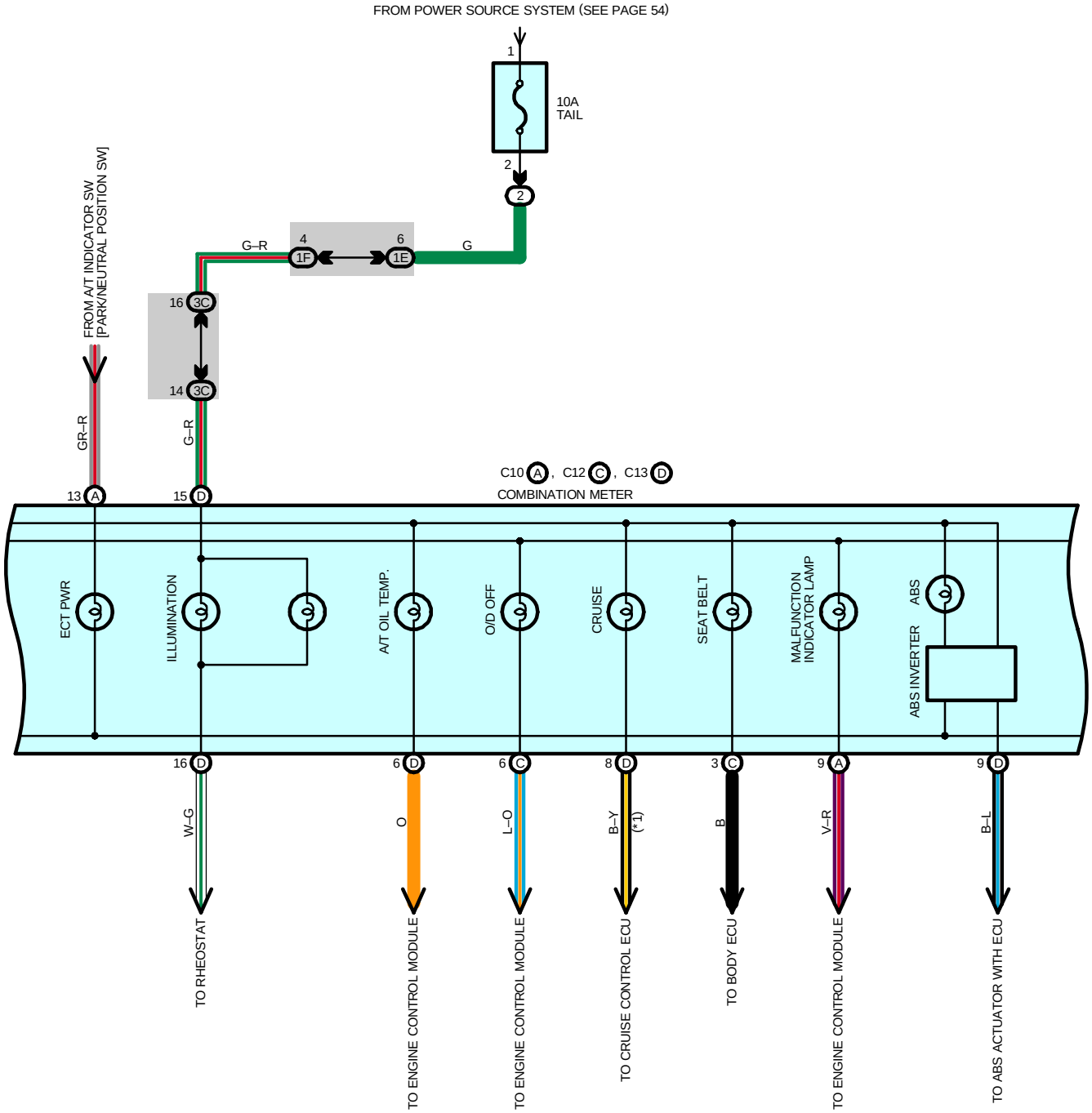

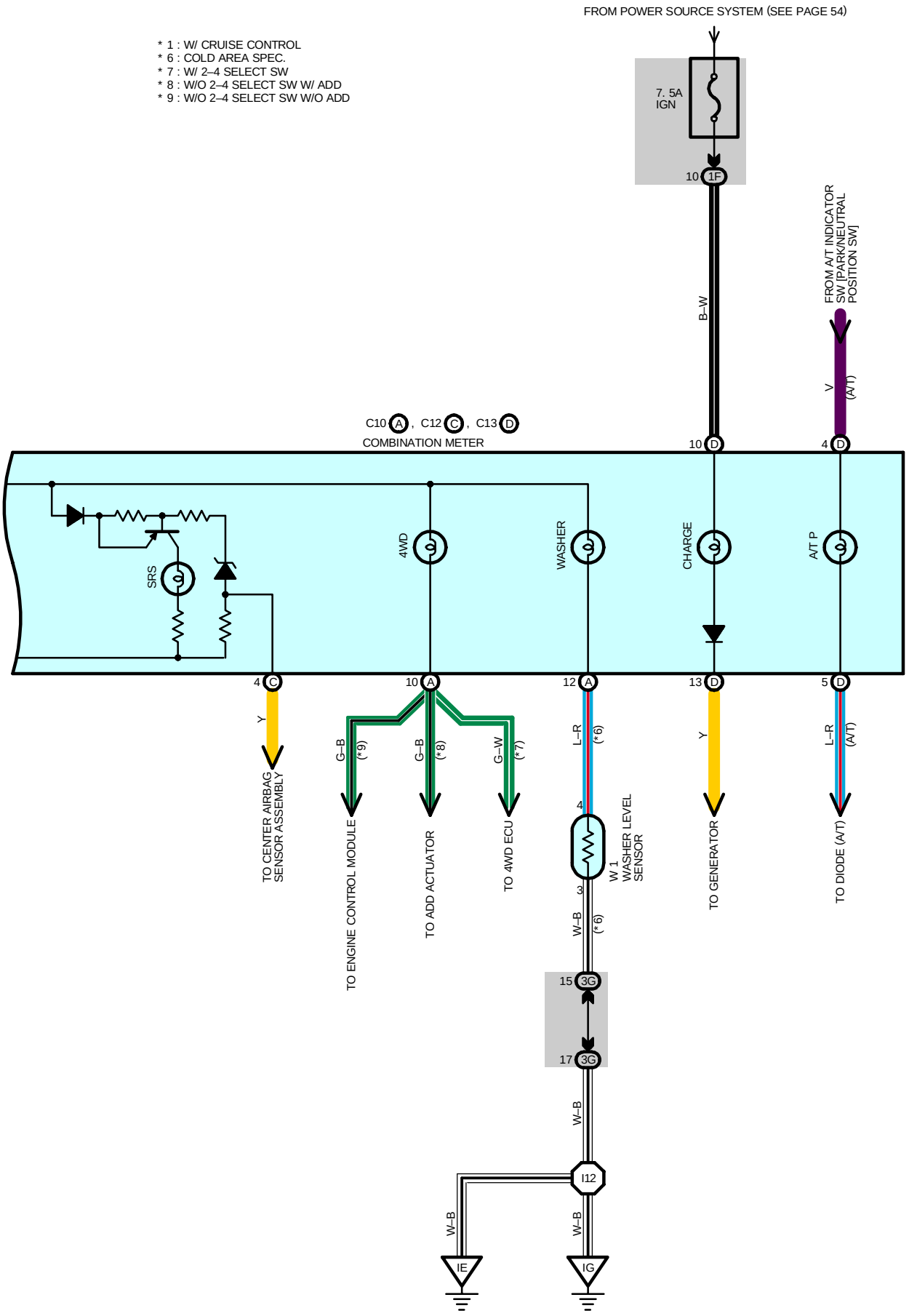
* 1 : W/ CRUISE CONTROL
* 6 : COLD AREA SPEC.
* 7 : W/ 2–4 SELECT SW
* 8 : W/O 2–4 SELECT SW W/ ADD
* 9 : W/O 2–4 SELECT SW W/O ADD
FROM POWER SOURCE SYSTEM (SEE PAGE 54)
7. 5A
IGN
10 1F
B–W
FROM A/T INDICATOR SW [PARK/NEUTRAL POSITION SW]
V
(A/T)
C10 A , C12 C , C13 D
COMBINATION METER
10 D
4 D
SRS
4WD
WASHER
CHARGE
A/T P
4 C
10 A
12 A
13 D
5 D
Y
G–B
(*9)
G–B
(*8)
G–W
(*7)
L–R
(*6)
Y
L–R
(A/T)
TO CENTER AIRBAG SENSOR ASSEMBLY
TO ENGINE CONTROL MODULE
TO ADD ACTUATOR
TO 4WD ECU
4
W 1
WASHER LEVEL SENSOR
3
W–B
(*6)
TO GENERATOR
TO DIODE (A/T)
15 3G
17 3G
W–B
I12
W–B
W–B
IE
IG

COMBINATION METER (w/o TACHOMETER)

SERVICE HINTS

B2 BRAKE FLUID LEVEL WARNING SW

1–2 : Closed with float down

C10 (A), C12 (C), C13 (D) COMBINATION METER

(A) 5, (D)1–GROUND : Approx. **12** volts with ignition SW on

(A) 7, (C) 1, (D)12–GROUND : Always continuity

P4 PARKING BRAKE SW

1–2 : Closed with parking brake lever pulled up

: PARTS LOCATION

Code	See Page	Code	See Page	Code	See Page
B2	30 (5VZ–FE)	F8	37 (Except Double Cab)	P4	35
	32 (3RZ–FE, 2RZ–FE)	J9 A	31 (5VZ–FE)	V10	31 (5VZ–FE)
C10 A	34		33 (3RZ–FE, 2RZ–FE)		33 (3RZ–FE, 2RZ–FE)
C12 C	34	J10 B	31 (5VZ–FE)	W1	31 (5VZ–FE)
C13 D	34		33 (3RZ–FE, 2RZ–FE)		33 (3RZ–FE, 2RZ–FE)
D8	34	O2	31 (5VZ–FE)	W2	31 (5VZ–FE)
F8	36 (Double Cab)		33 (3RZ–FE, 2RZ–FE)		33 (3RZ–FE, 2RZ–FE)

: RELAY BLOCKS

Code	See Page	Relay Blocks (Relay Block Location)
2	21	R/B No.2 (Engine Compartment Left)

: JUNCTION BLOCK AND WIRE HARNESS CONNECTOR

Code	See Page	Junction Block and Wire Harness (Connector Location)
1D	23	Cowl Wire and J/B No.1 (Lower Finish Panel)
1E	23	Engine Room Main Wire and J/B No.1 (Lower Finish Panel)
1F	23	Cowl Wire and J/B No.1 (Lower Finish Panel)
3A	24	Cowl Wire and J/B No.3 (Behind the Instrument Panel Left)
3B		
3C		
3D		
3F		
3G	26	Cowl Wire and J/B No.3 (Behind the Instrument Panel Center)

: CONNECTOR JOINING WIRE HARNESS AND WIRE HARNESS

Code	See Page	Joining Wire Harness and Wire Harness (Connector Location)
IK2	44	Engine Wire and Cowl Wire (Above the Glove Box)
BN7	46 (Double Cab)	Frame Wire and Cowl Wire (Under the Driver's Seat)
	48 (Except Double Cab)	

: GROUND POINTS

Code	See Page	Ground Points Location
EA	40 (5VZ–FE)	Front Left Fender
	42 (3RZ–FE, 2RZ–FE)	
EB	40 (5VZ–FE)	Near the Throttle Body
EF	42 (3RZ–FE, 2RZ–FE)	Ignition Coil Braket
ID	44	Left Kick Panel
IE	44	Around the Right Edge of the Reinforcement
IG	44	Around the Left Edge of the Reinforcement



: SPLICE POINTS

Code	See Page	Wire Harness with Splice Points	Code	See Page	Wire Harness with Splice Points
I9	44	Cowl Wire	I12	44	Cowl Wire

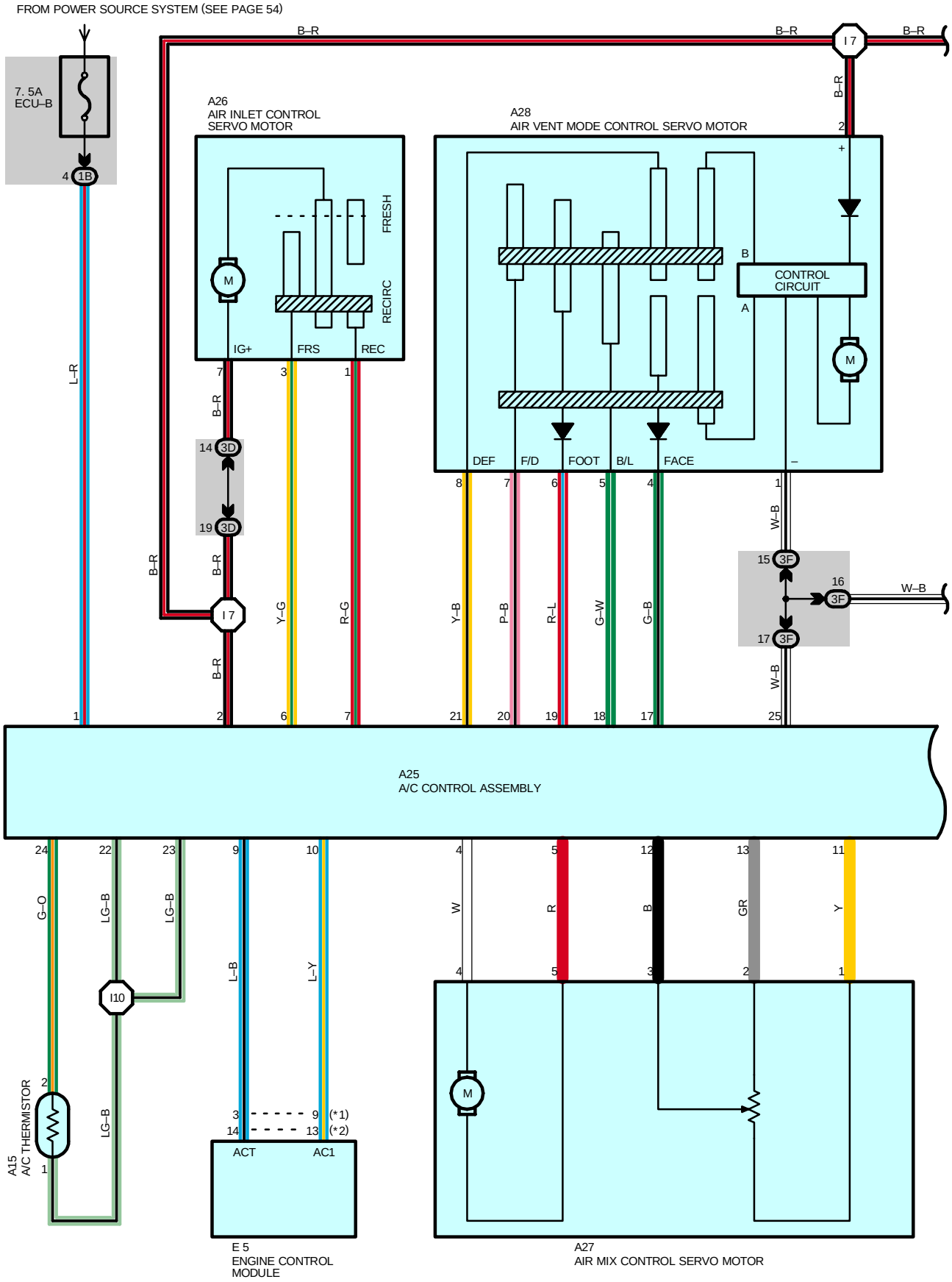
FROM POWER SOURCE SYSTEM (SEE PAGE 54)
7. 5A
ECU–B
4 1B
L–R
B–R
B–R
I 7
B–R
2
+
A26
AIR INLET CONTROL
SERVO MOTOR
M
FRESH
RECIRC
IG+
FRS
REC
7
3
1
B–R
14 3D
19 3D
B–R
B–R
I 7
Y–G
R–G
2
6
7
A28
AIR VENT MODE CONTROL SERVO MOTOR
B
CONTROL
CIRCUIT
A
M
DEF
F/D
FOOT
B/L
FACE
–
8
7
6
5
4
1
Y–B
P–B
R–L
G–W
G–B
W–B
15 3F
16 3F
W–B
17 3F
W–B
21
20
19
18
17
25
1
A25
A/C CONTROL ASSEMBLY
24
22
23
9
10
4
5
12
13
11
G–O
LG–B
LG–B
L–B
L–Y
W
R
B
GR
Y
I10
4
5
3
2
1
2
LG–B
A15
A/C THERMISTOR
1
3
9 (*1)
14
13 (*2)
ACT
AC1
M
E 5
ENGINE CONTROL
MODULE
A27
AIR MIX CONTROL SERVO MOTOR

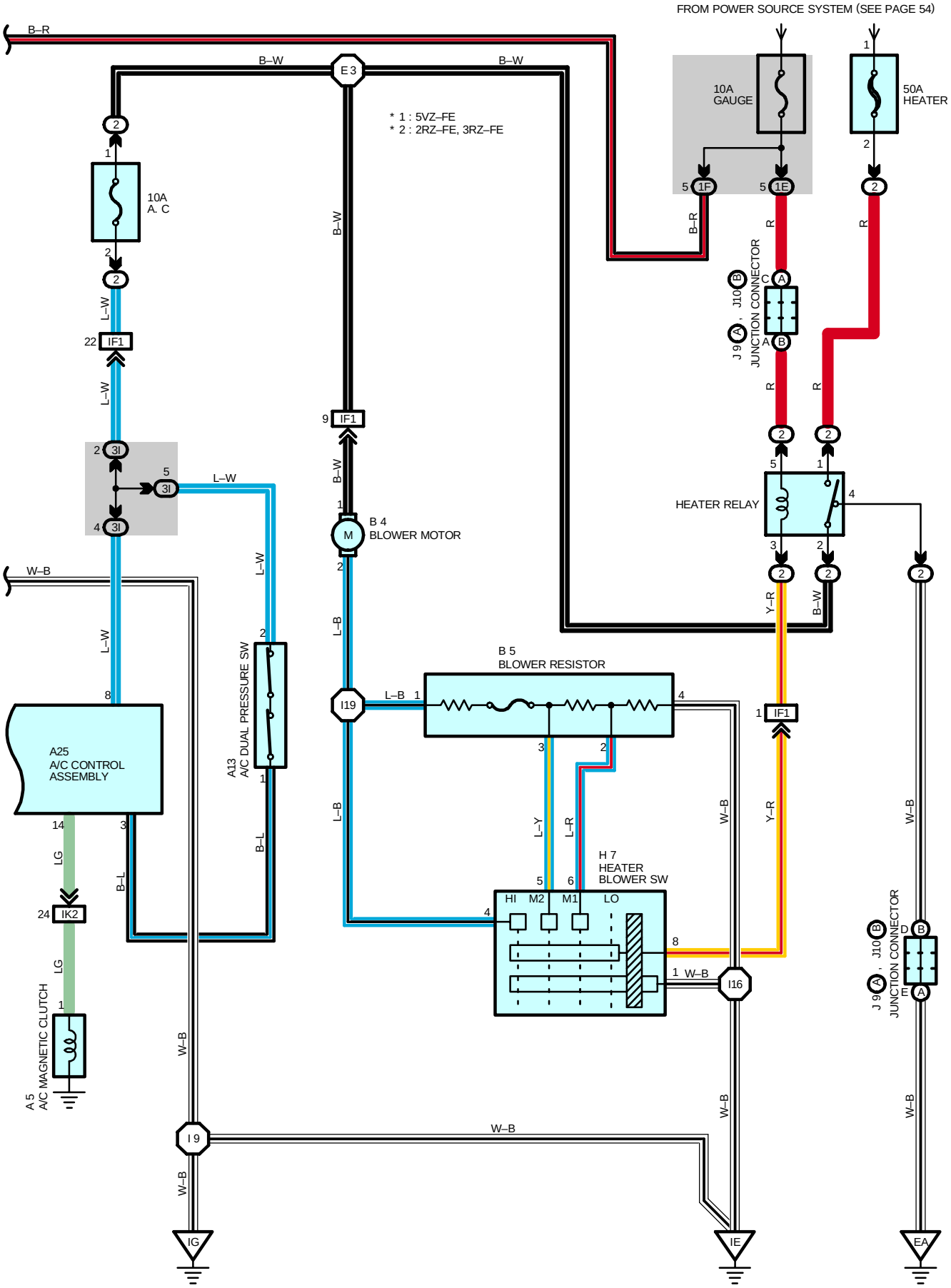
FROM POWER SOURCE SYSTEM (SEE PAGE 54)
B–R
B–W
E 3
B–W
* 1 : 5VZ–FE
* 2 : 2RZ–FE, 3RZ–FE
10A
GAUGE
50A
HEATER
10A
A. C
B–W
B–R
R
L–W
22 IF1
L–W
9 IF1
B–W
B 4
BLOWER MOTOR
J 9 , J10
JUNCTION CONNECTOR
HEATER RELAY
L–W
W–B
L–W
L–W
B 5
BLOWER RESISTOR
L–B
I19
L–B
Y–R
B–W
A25
A/C CONTROL
ASSEMBLY
A13
A/C DUAL PRESSURE SW
B–L
L–Y
L–R
W–B
Y–R
H 7
HEATER
BLOWER SW
HI M2 M1 LO
LG
B–L
24 IK2
LG
A 5
A/C MAGNETIC CLUTCH
W–B
1 W–B
I16
W–B
I 9
W–B
W–B
W–B
IG
IE
EA

SYSTEM OUTLINE

1. HEATER BLOWER MOTOR OPERATION

With the ignition SW on, the current from the GAUGE fuse flows to TERMINAL 5 of the HEATER relay to TERMINAL 3 to TERMINAL 8 of the heater blower SW.

(Low speed operation)

When the heater blower SW is moved to the low speed position, the current applied to TERMINAL 8 of the heater blower SW flows from TERMINAL 1 to GROUND, causing the HEATER relay to come on. Then the current flowing from the HEATER fuse flows to TERMINAL 1 of the HEATER relay to TERMINAL 2 to TERMINAL 1 of the blower motor to TERMINAL 2 to TERMINAL 1 of the blower resistor to TERMINAL 4 to GROUND, causing the blower motor to rotate.

At this time, current flows against the full resistance of the blower resistor, so the motor rotates slowly at low speed.

(Operation at speed M1, M2)

When the heater blower SW is moved to the speed M1 position, the current applied to TERMINAL 8 of the heater blower SW flows to TERMINAL 1 to GROUND, turning the HEATER relay to on. Then, the same as with low speed, current passes from the blower motor to TERMINAL 1 of the blower resistor to TERMINAL 2 to TERMINAL 6 of the heater blower SW to TERMINAL 1 to GROUND. At this time, the resistance of the blower resistor is less than it is for low speed, so the blower motor rotates faster than it does at low speed. With the heater blower SW in the M2 position, current flowing through the motor flows from TERMINAL 1 of the blower resistor to TERMINAL 3 to TERMINAL 5 of the heater blower SW to TERMINAL 1 to GROUND. At this time, the resistance of the blower resistor is less than for speed M1, so the blower motor rotates faster than for speed M1.

(High speed operation)

With the heater blower SW in high speed position, until the HEATER relay comes on and current flows to the blower motor, operation is the same as for speed M1 and M2. The current passing through the blower motor flows to TERMINAL 4 of the heater blower SW to TERMINAL 1 to GROUND without flowing through the blower resistor, so that the blower motor rotates at the fastest speed, high speed.

2. AIR INLET CONTROL SERVO MOTOR OPERATION

(Switching from FRESH to RECIRC)

With the ignition SW turned on, the current flows from GAUGE fuse to TERMINAL 7 of the air inlet control servo motor to TERMINAL 3 to TERMINAL 6 of the A/C control assembly to TERMINAL 25 to GROUND, the motor rotates and the damper moves to the RECIRC side. When the damper operates with the A/C SW at RECIRC position, the damper position signal is input from TERMINAL 1 of the servo motor to TERMINAL 7 of the A/C control assembly. As a result, current to the servo motor circuit is cut off by the A/C control assembly, so the damper stops at that position.

(Switching from RECIRC to FRESH)

With the ignition SW turned on, when the RECIRC/FRESH SW is switched to the FRESH side, the current flows from TERMINAL 7 of the air inlet control servo motor to TERMINAL 3 to TERMINAL 6 of the A/C control assembly to TERMINAL 25 to GROUND, the motor rotates and the damper stops at that position.

3. AIR VENT MODE CONTROL SERVO MOTOR OPERATION

When the ignition SW turned on, the current flows from GAUGE fuse to TERMINAL 2 of the A/C control assembly.

(Switching from DEF to FACE)

The current flows from TERMINAL 17 of the A/C control assembly to TERMINAL 4 of the air vent mode control servo motor to TERMINAL 8 to TERMINAL 21 of the A/C control assembly to TERMINAL 25 to GROUND. The motor rotates and the damper moves to the FACE side. When the damper operates with the A/C SW at FACE position, the damper position signal is input from TERMINAL 8 of the servo motor to the TERMINAL 21 of the A/C control assembly. As a result, current to the servo motor circuit is cut off by the A/C control assembly, so the damper stops at that position.

(Switching from FACE to DEF)

The current flows from TERMINAL 21 of the A/C control assembly to TERMINAL 8 of the air vent control servo motor to TERMINAL 4 to TERMINAL 17 of the A/C control assembly to TERMINAL 25 to GROUND, the motor rotates and the damper stops at that position.

4. AIR MIX CONTROL SERVO MOTOR CONTROL

When the temperature control SW is pressed, the A/C control assembly sends a signal to the air mix control servo motor. This signal drives the motor to reach the temperature set by the temperature control SW, and moves the film damper.

5. AIR CONDITIONING OPERATION

When the blower SW is set to on, current from the HEATER fuse flows through the HEATER relay (Point side) to A.C fuse to TERMINAL 2 of the A/C dual pressure SW to TERMINAL 1 to TERMINAL 3 of the A/C control assembly. The evaporator temp. signal from the A/C thermistor are all supplied to the A/C control assembly. When the A/C SW is turned on, the A/C SW on signal is sent to activate the A/C control assembly. Current flows from the A/C control assembly to the magnetic clutch, turning the compressor on. The A/C operation is shut off when a signal indicating low evaporator temp., or abnormally high or low refrigerant pressure, is supplied while the engine high speed signal exists. When one of these signals is received, the assembly shuts off the A/C operation.

SERVICE HINTS

HEATER RELAY

1–2 : Closed with ignition SW on and blower SW on.

A13 A/C DUAL PRESSURE SW

1–2 : Open with refrigerant pressure at less than approx. **2.0** kgf/cm^2 (**28.4** psi, **196** kpa) or more than approx. **32** kgf/cm^2 (**455** psi, **3138** kpa).

: PARTS LOCATION

Code	See Page	Code	See Page	Code		See Page
A5	30 (5VZ–FE)	A27	34	J9	A	31 (5VZ–FE)
	32 (3RZ–FE, 2RZ–FE)	A28	34			33 (3RZ–FE, 2RZ–FE)
A13	34	B4	34	J10	B	31 (5VZ–FE)
A15	34	B5	34			33 (3RZ–FE, 2RZ–FE)
A25	34	E5	35			
A26	34	H7	35			

: RELAY BLOCKS

Code	See Page	Relay Blocks (Relay Block Location)
2	21	R/B No.2 (Engine Compartment Left)

: JUNCTION BLOCK AND WIRE HARNESS CONNECTOR

Code	See Page	Junction Block and Wire Harness (Connector Location)
1B	23	Cowl Wire and J/B No.1 (Lower Finish Panel)
1E	23	Engine Room Main Wire and J/B No.1 (Lower Finish Panel)
1F	23	Cowl Wire and J/B No.1 (Lower Finish Panel)
3D	24	Cowl Wire and J/B No.3 (Behind the Instrument Panel Left)
3F		
3I	26	Cowl Wire and J/B No.3 (Behind the Instrument Panel Center)

: CONNECTOR JOINING WIRE HARNESS AND WIRE HARNESS

Code	See Page	Joining Wire Harness and Wire Harness (Connector Location)
IF1	44	Engine Room Main Wire and Cowl Wire (Left Kick Panel)
IK2	44	Engine Wire and Cowl Wire (Above the Glove Box)

: GROUND POINTS

Code	See Page	Ground Points Location
EA	40 (5VZ–FE)	Front Left Fender
	42 (3RZ–FE, 2RZ–FE)	
IE	44	Around the Right Edge of the Reinforcement
IG	44	Around the Left Edge of the Reinforcement

: SPLICE POINTS

Code	See Page	Wire Harness with Splice Points	Code	See Page	Wire Harness with Splice Points
E3	40 (5VZ–FE)	Engine Room Main Wire	I10	44	Cowl Wire
	42 (3RZ–FE, 2RZ–FE)		I16		
I7	44	Cowl Wire	I19		
I9					

4WD (w/ 2–4 SELECT SW)

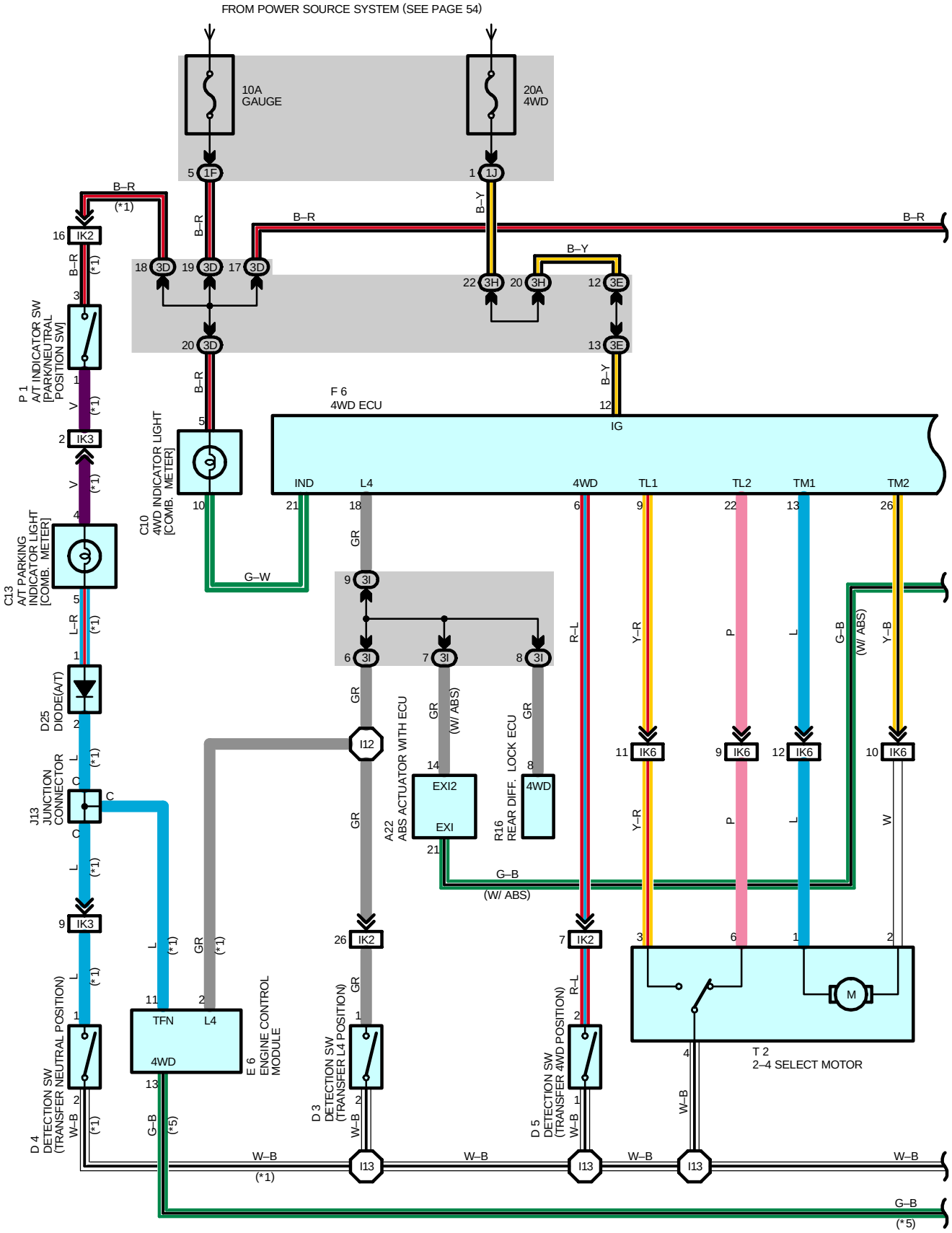

* 1 : A/T
* 2 : W/ ADD
* 3 : W/ DAYTIME RUNNING LIGHT
* 4 : W/O DAYTIME RUNNING LIGHT
* 5 : 5VZ–FE 2WD M/T

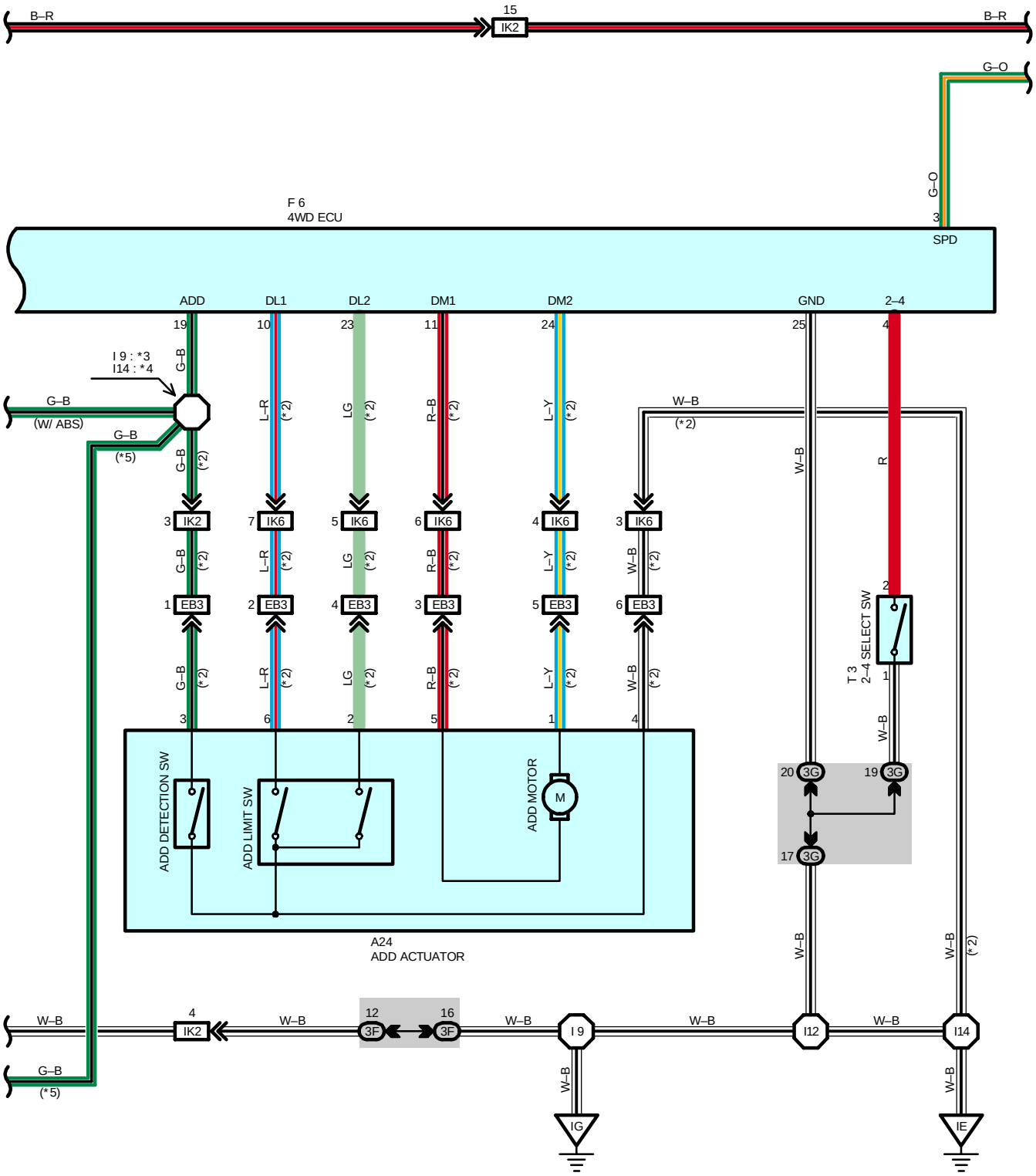

4WD (w/ 2–4 SELECT SW)

* 5 : W/ TACHOMETER
* 6 : W/O TACHOMETER

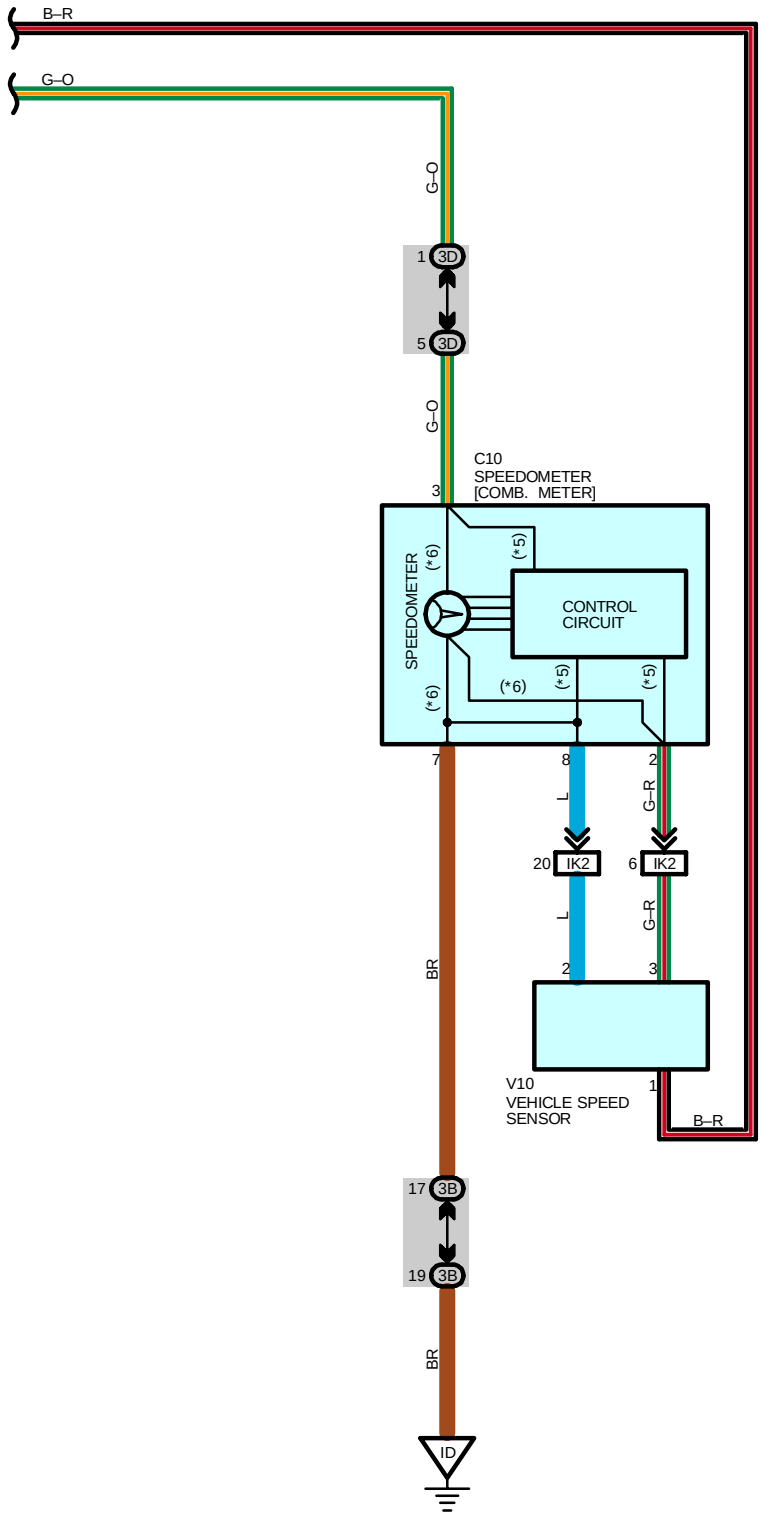

SYSTEM OUTLINE

The 4WD ECU operates the 2–4 select motor in accordance with the conditions of the 2–4 select SW, the detection SW (Transfer 4WD position) and the detection SW (Transfer L4 position). It also controls the range over which shifting from H2 to H4 is possible based on the vehicle speed sensor. If the 2-4 select SW is pushed in while shifting is prohibited, it causes the 4WD indicator light to flash and sounds a warning buzzer to inform the driver. The warning buzzer is built into the ECU. The operation of the ECU is as follows.

2-4 SELECT SYSTEM

The 2–4 select system selects between 2WD and 4WD by means of a 2–4 select SW located in the transfer shift lever knob which provides good operability.

This system uses an ECU which drives the 2–4 select motor in accordance with signals from various sensors and accomplishes shifting between 2WD and 4WD. Shifting between H4 to L4 is accomplished by operating the transfer shift lever as before. This system also permits shifting between H2 and H4 without first shifting to H4. All models equipped with 2–4 select system are also equipped with the add, explained later.

(1) Shifting from H4 to H2

When the 2–4 select SW is turned off, a signal is input to the 2–4 select motor from the 4WD ECU, activating the 2–4 select motor so that the transfer changes to 2WD (H2 position).

At this time, the detection SW (Transfer 4WD position) and ADD indicator SW are off, so the 4WD indicator light goes off.

(2) Shifting from H2 to H4 (During normal driving)

When the 2–4 select SW is turned on, a signal is input to the 2–4 select motor from the 4WD ECU, activating the 2–4 select motor so that the transfer changes to 4WD (H4 position)

(3) Shifting from H2 to H4 (High speed driving)

The vehicle speed within below approx. 100 km/h, 62 mph, activating the 2–4 select motor so that the transfer changes to 4WD (H4 position)

The 4WD ECU stops the signal to the 2-4 select motor with the signal from the vehicle speed sensor. At the same time, it causes the 4WD indicator light to light up and the warning buzzer inside the 4WD ECU to sound.

(4) Shifting to L4

When the transfer shift lever is moved to L4 position, the transfer changes to LO position. This turns the detection SW (Transfer L4 position) on, so regardless of whether the 2–4 select SW is on or off, a signal is input to the 2–4 select motor from the 4WD ECU, activating the 2–4 select motor so that the transfer changes to 4WD (L4 position) in LO condition.

SERVICE HINTS

F6 4WD ECU

12–GROUND : Approx. **12** volts with ignition SW at **ON** position
25–GROUND : Always continuity
3–GROUND : **4** pulses with **1** rotation
4–GROUND : **2** volts or less with 2–4 select SW on
18–GROUND : **2** volts or less with detection SW (Transfer L4 position) on and transfer shift lever at **L4** position

T3 2–4 SELECT SW

1–2 : Closed with 2–4 select SW on

P1 A/T INDICATOR SW [PARK/NEUTRAL POSITION SW]

3–1 : Closed with A/T shift lever at **P** position

○ : PARTS LOCATION

Code	See Page	Code	See Page	Code	See Page
A22	30 (5VZ–FE)	D5	30 (5VZ–FE)	R16	35
A24	30 (5VZ–FE)	D25	34	T2	31 (5VZ–FE)
C10	34	E6	35	T3	35
C13	34	F6	35	V10	31 (5VZ–FE)
D3	30 (5VZ–FE)	J13	35		
D4	30 (5VZ–FE)	P1	31 (5VZ–FE)		

4WD (w/ 2–4 SELECT SW)

: JUNCTION BLOCK AND WIRE HARNESS CONNECTOR

Code	See Page	Junction Block and Wire Harness (Connector Location)
1F	23	Cowl Wire and J/B No.1 (Lower Finish Panel)
1J		
3B	24	Cowl Wire and J/B No.3 (Behind the Instrument Panel Left)
3D		
3E		
3F		
3G	26	Cowl Wire and J/B No.3 (Behind the Instrument Panel Center)
3H		
3I		

: CONNECTOR JOINING WIRE HARNESS AND WIRE HARNESS

Code	See Page	Joining Wire Harness and Wire Harness (Connector Location)
EB3	40 (5VZ–FE)	Engine Wire and Differential Wire (Front Differential Upper Side)
IK2	44	Engine Wire and Cowl Wire (Above the Glove Box)
IK3		
IK6		

: GROUND POINTS

Code	See Page	Ground Points Location
ID	44	Left Kick Panel
IE	44	Around the Right Edge of the Reinforcement
IG	44	Around the Left Edge of the Reinforcement

: SPLICE POINTS

Code	See Page	Wire Harness with Splice Points	Code	See Page	Wire Harness with Splice Points
I9	44	Cowl Wire	I13	44	Engine Wire
I12			I14	44	Cowl Wire

4WD (w/o 2–4 SELECT SW)

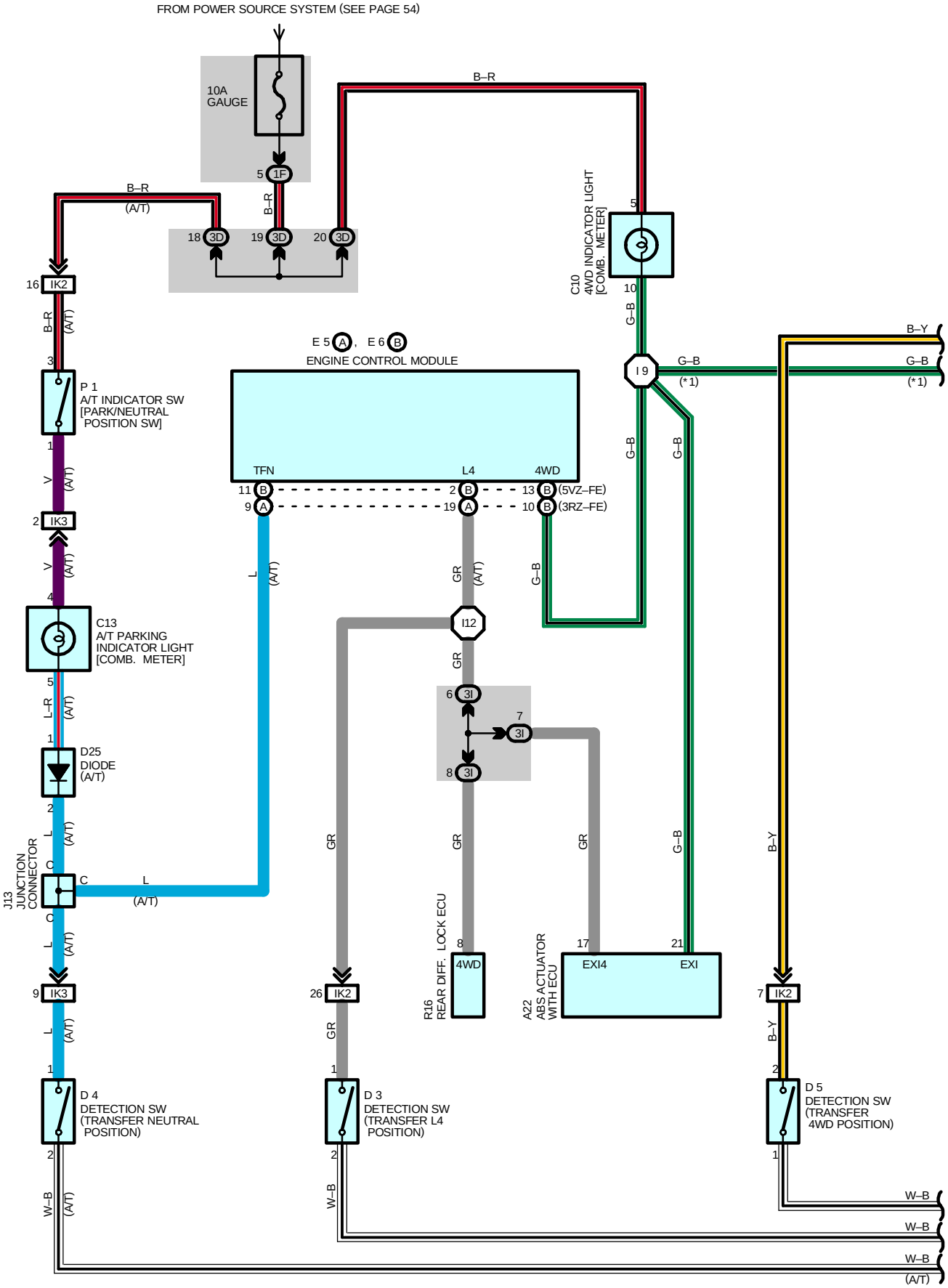

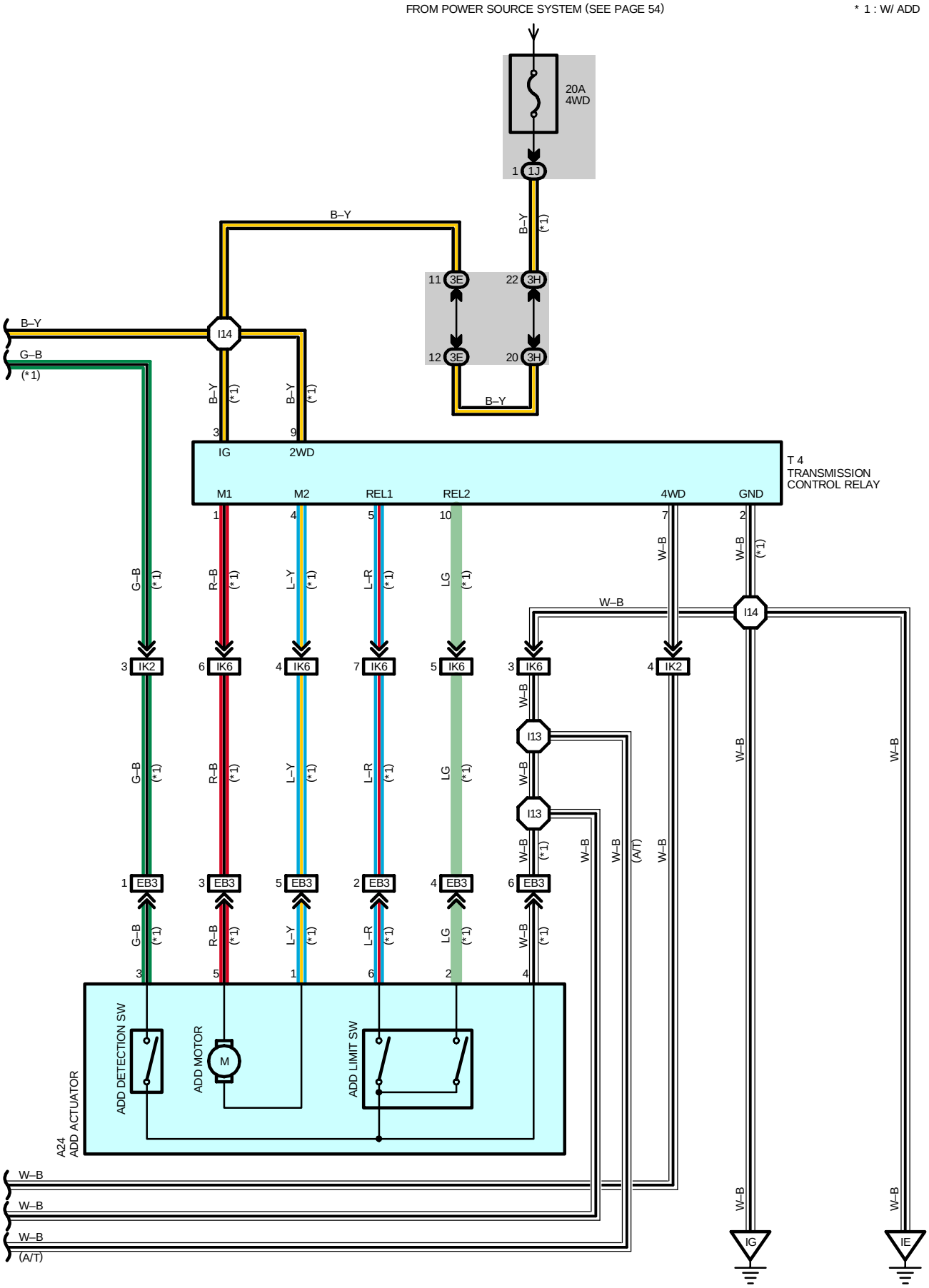
FROM POWER SOURCE SYSTEM (SEE PAGE 54)
* 1 : W/ ADD
20A
4WD
1J
B–Y
(*1)
11 3E
22 3H
12 3E
20 3H
B–Y
G–B
I14
3
IG
9
2WD
T 4
TRANSMISSION
CONTROL RELAY
M1
M2
REL1
REL2
4WD
GND
1
4
5
10
7
2
R–B
L–Y
L–R
LG
W–B
IK2
IK6
EB3
I13
A24
ADD ACTUATOR
ADD DETECTION SW
ADD MOTOR
M
ADD LIMIT SW
(A/T)
IG
IE

4WD (w/o 2–4 SELECT SW)

SERVICE HINTS

P1 A/T INDICATOR SW [PARK/NEUTRAL POSITION SW]

3–1 : Closed with A/T shift position at **P** position

D4 DETECTION SW (TRANSFER NEUTRAL POSITION)

1–2 : Closed with transfer position at **N** position

○ : PARTS LOCATION

Code	See Page	Code	See Page	Code	See Page
A22	30 (5VZ–FE)	D3	32 (3RZ–FE)	E6 B	35
	32 (3RZ–FE)	D4	30 (5VZ–FE)	J13	35
A24	30 (5VZ–FE)		32 (3RZ–FE)	P1	31 (5VZ–FE)
	32 (3RZ–FE)	D5	30 (5VZ–FE)		33 (3RZ–FE)
C10	34		32 (3RZ–FE)	R16	35
C13	34	D25	34	T4	35
D3	30 (5VZ–FE)	E5 A	35		

: JUNCTION BLOCK AND WIRE HARNESS CONNECTOR

Code	See Page	Junction Block and Wire Harness (Connector Location)
1F	23	Cowl Wire and J/B No.1 (Lower Finish Panel)
1J		
3D	24	Cowl Wire and J/B No.3 (Behind the Instrument Panel Left)
3E		
3H	26	Cowl Wire and J/B No.3 (Behind the Instrument Panel Center)
3I		

: CONNECTOR JOINING WIRE HARNESS AND WIRE HARNESS

Code	See Page	Joining Wire Harness and Wire Harness (Connector Location)
EB3	40 (5VZ–FE)	Engine Wire and Differential Wire (Front Differential Upper Side)
	42 (3RZ–FE)	
IK2	44	Engine Wire and Cowl Wire (Above the Glove Box)
IK3		
IK6		

: GROUND POINTS

Code	See Page	Ground Points Location
IE	44	Around the Right Edge of the Reinforcement
IG	44	Around the Left Edge of the Reinforcement

: SPLICE POINTS

Code	See Page	Wire Harness with Splice Points	Code	See Page	Wire Harness with Splice Points
I9	44	Cowl Wire	I13	44	Engine Wire
I12			I14	44	Cowl Wire

2003 TOYOTA TACOMA ELECTRICAL WIRING DIAGRAM SYSTEM CIRCUITS

	Page
ABS	150
Air Conditioning	220
Automatic Transmission (2RZ–FE)	134
Back–Up Light	118
Charging	68
Cigarette Lighter	200
Clock	200
Combination Meter (w/ Tachometer)	208
Combination Meter (w/o Tachometer)	214
Cruise Control (Except 5VZ–FE 2WD M/T,3RZ–FE and 2RZ–FE)	138
Cruise Control (5VZ–FE 2WD M/T,3RZ–FE and 2RZ–FE)	144
Door Lock Control	178
Electronically Controlled Transmission (3RZ–FE)	128
Electronically Controlled Transmission (5VZ–FE)	122
Engine Control (2RZ–FE)	94
Engine Control (3RZ–FE)	86
Engine Control (5VZ–FE except 2WD M/T)	70
Engine Control (5VZ–FE 2WD M/T)	78
Headlight (w/ Daytime Running Light)	104
Headlight (w/o Daytime Running Light)	102
Horn	154
Ignition (3RZ–FE, 2RZ–FE)	66
Ignition (5VZ–FE)	58
Illumination	110
Interior Light	108
Key Reminder	196
Light Auto Turn Off	120
Power Outlet	198
Power Seat	202
Power Source	54
Power Window	182
Radio and Player	204
Rear Differential Lock	172
Remote Control Mirror (w/ Power Window)	188
Remote Control Mirror (w/o Power Window)	190
Seat Belt Warning	196
Shift Lock	176
SRS	157
Starting (3RZ–FE, 2RZ–FE)	62
Starting (5VZ–FE)	58
Stop Light	116
Taillight	110
Turn Signal and Hazard Warning Light	114
Wiper and Washer (w/ Int time SW Mechanism)	192
Wiper and Washer (w/o Int time SW Mechanism)	194
4WD (w/ 2–4 Select SW)	162
4WD (w/o 2–4 Select SW)	168

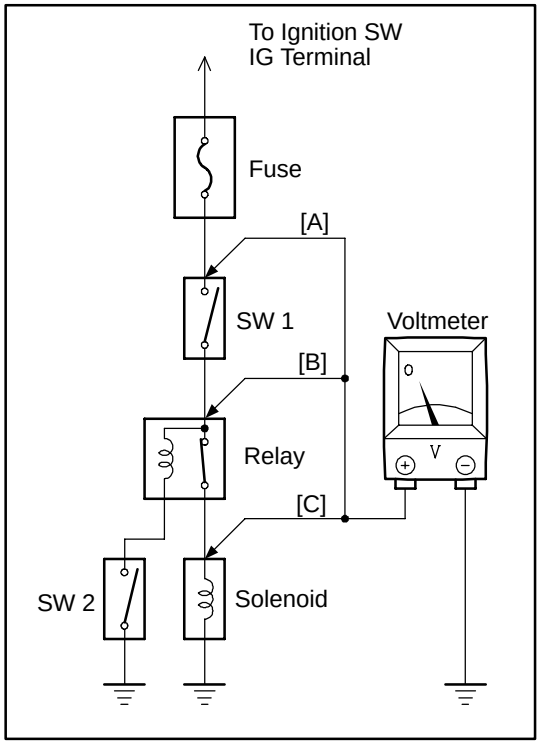

VOLTAGE CHECK

(a) Establish conditions in which voltage is present at the check point.

Example:
[A] – Ignition SW on
[B] – Ignition SW and SW 1 on
[C] – Ignition SW, SW 1 and Relay on (SW 2 off)

(b) Using a voltmeter, connect the negative lead to a good ground point or negative battery terminal, and the positive lead to the connector or component terminal.
This check can be done with a test light instead of a voltmeter.

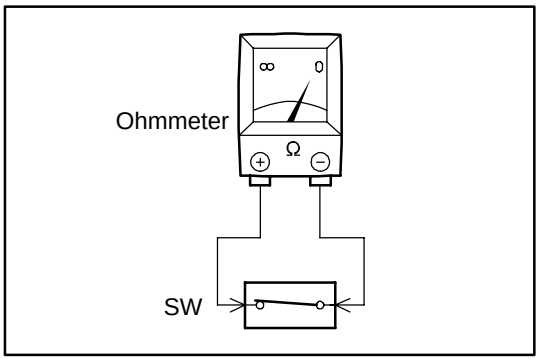

CONTINUITY AND RESISTANCE CHECK

(a) Disconnect the battery terminal or wire so there is no voltage between the check points.

(b) Contact the two leads of an ohmmeter to each of the check points.

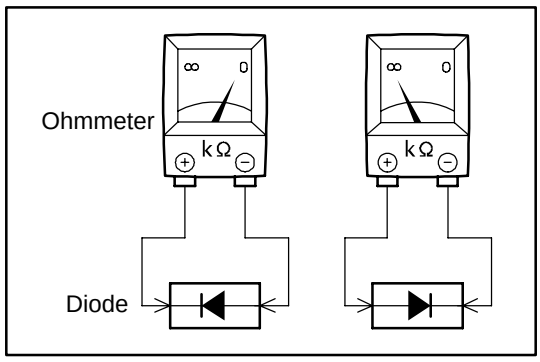

If the circuit has diodes, reverse the two leads and check again.
When contacting the negative lead to the diode positive side and the positive lead to the negative side, there should be continuity.
When contacting the two leads in reverse, there should be no continuity.

(c) Use a volt/ohmmeter with high impedance (10 kΩ/V minimum) for troubleshooting of the electrical circuit.

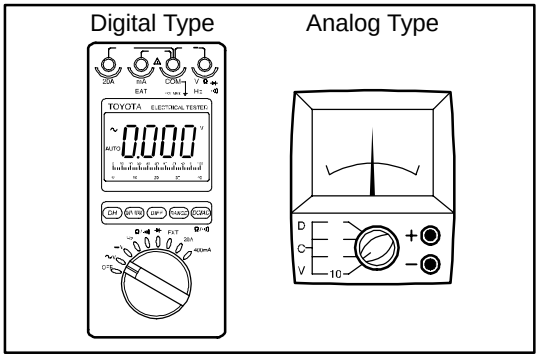

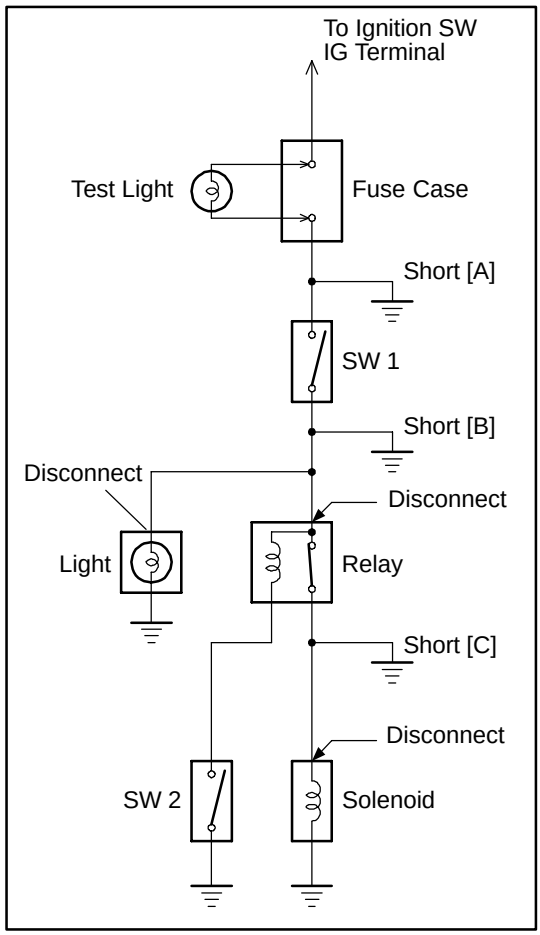

FINDING A SHORT CIRCUIT

(a) Remove the blown fuse and disconnect all loads of the fuse.

(b) Connect a test light in place of the fuse.

(c) Establish conditions in which the test light comes on.

Example:
[A] – Ignition SW on
[B] – Ignition SW and SW 1 on
[C] – Ignition SW, SW 1 and Relay on (Connect the Relay) and SW 2 off (or Disconnect SW 2)

(d) Disconnect and reconnect the connectors while watching the test light.
The short lies between the connector where the test light stays lit and the connector where the light goes out.

(e) Find the exact location of the short by lightly shaking the problem wire along the body.

CAUTION:

(a) Do not open the cover or the case of the ECU unless absolutely necessary. (If the IC terminals are touched, the IC may be destroyed by static electricity.)

(b) When replacing the internal mechanism (ECU part) of the digital meter, be careful that no part of your body or clothing comes in contact with the terminals of leads from the IC, etc. of the replacement part (spare part).

DISCONNECTION OF MALE AND FEMALE CONNECTORS

To pull apart the connectors, pull on the connector itself, not the wire harness.

HINT : Check to see what kind of connector you are disconnecting before pulling apart.

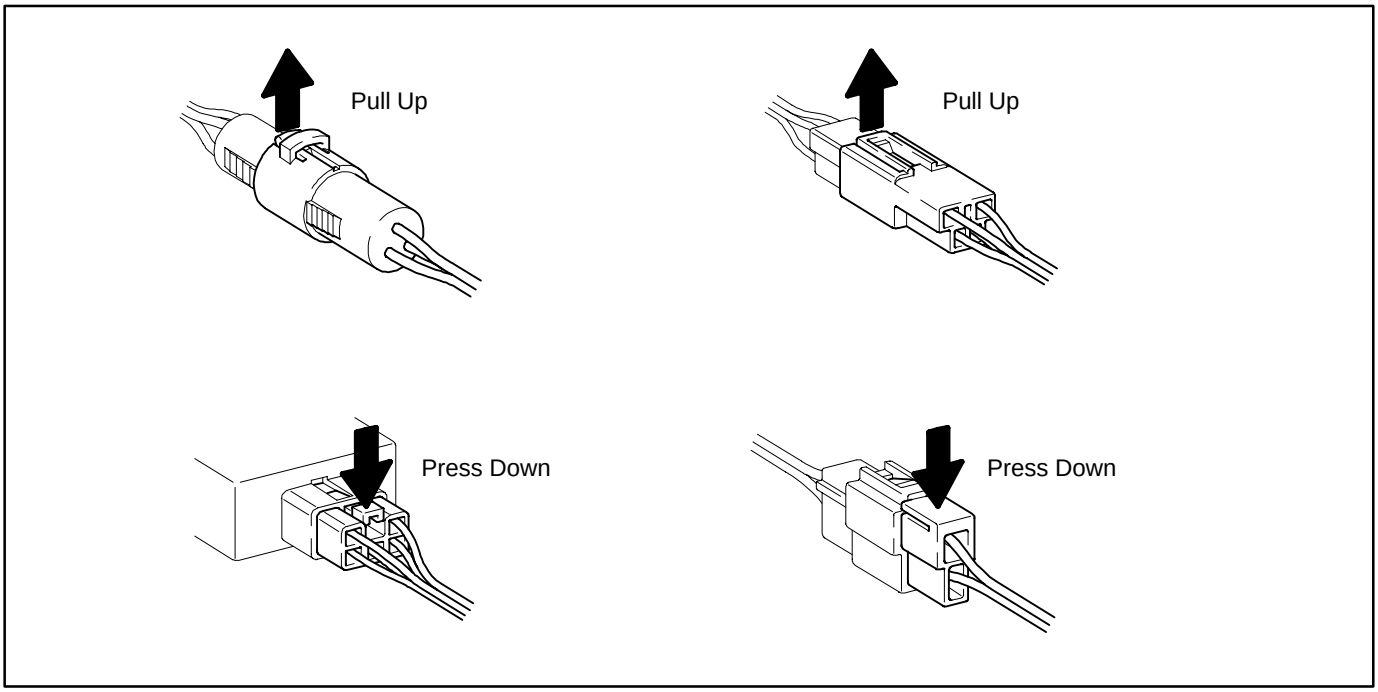

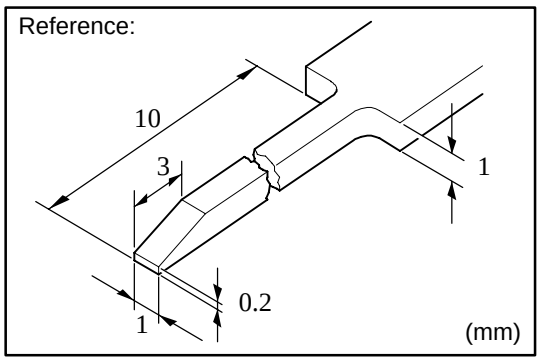

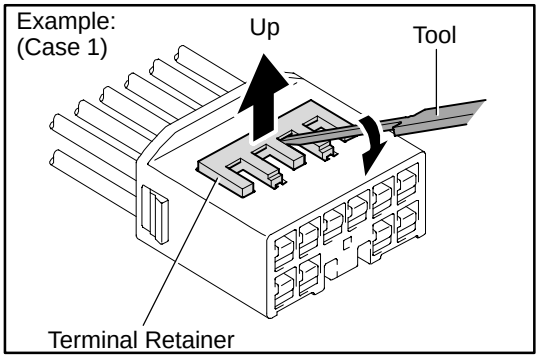

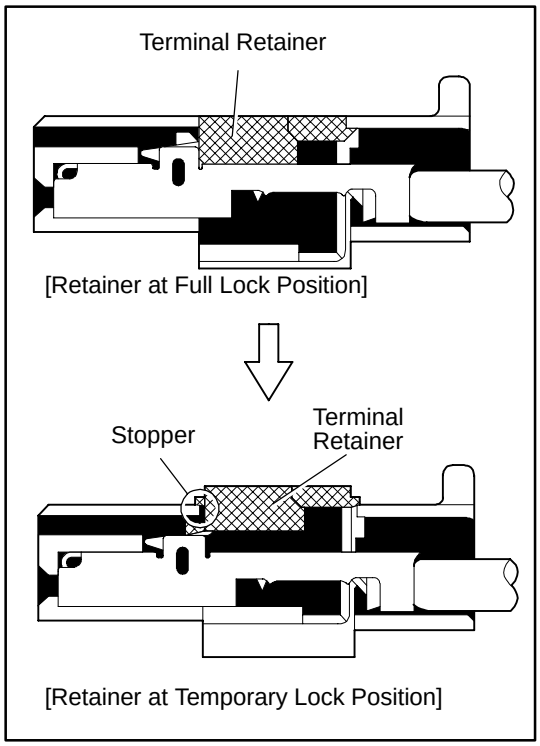

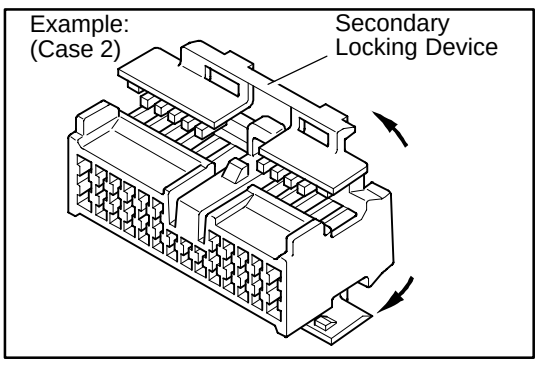

HOW TO REPLACE TERMINAL (with terminal retainer or secondary locking device)

1. PREPARE THE SPECIAL TOOL

   HINT : To remove the terminal from the connector, please construct and use the special tool or like object shown on the left.

2. DISCONNECT CONNECTOR

3. DISENGAGE THE SECONDARY LOCKING DEVICE OR TERMINAL RETAINER.

   (a) Locking device must be disengaged before the terminal locking clip can be released and the terminal removed from the connector.

   (b) Use a special tool or the terminal pick to unlock the secondary locking device or terminal retainer.

   NOTICE:
   Do not remove the terminal retainer from connector body.

   [A] For Non–Waterproof Type Connector

   HINT : The needle insertion position varies according to the connector's shape (number of terminals etc.), so check the position before inserting it.

   "Case 1"

   Raise the terminal retainer up to the temporary lock position.

   "Case 2"

   Open the secondary locking device.

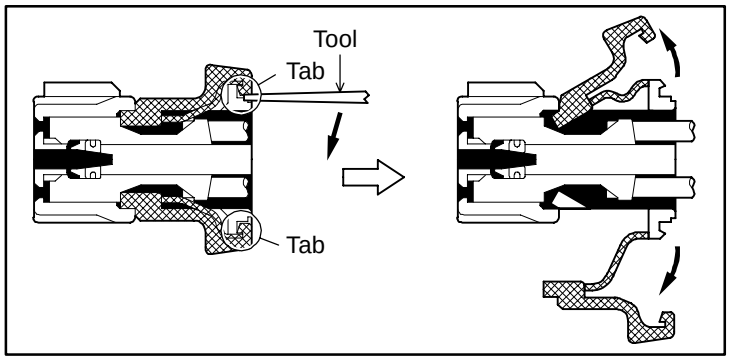

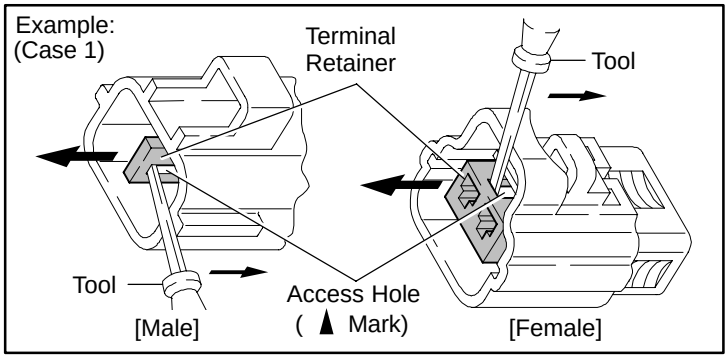

[B] For Waterproof Type Connector

HINT : Terminal retainer color is different according to connector body.

Example:

Terminal Retainer	: Connector Body
Black or White	: Gray
Black or White	: Dark Gray
Gray or White	: Black

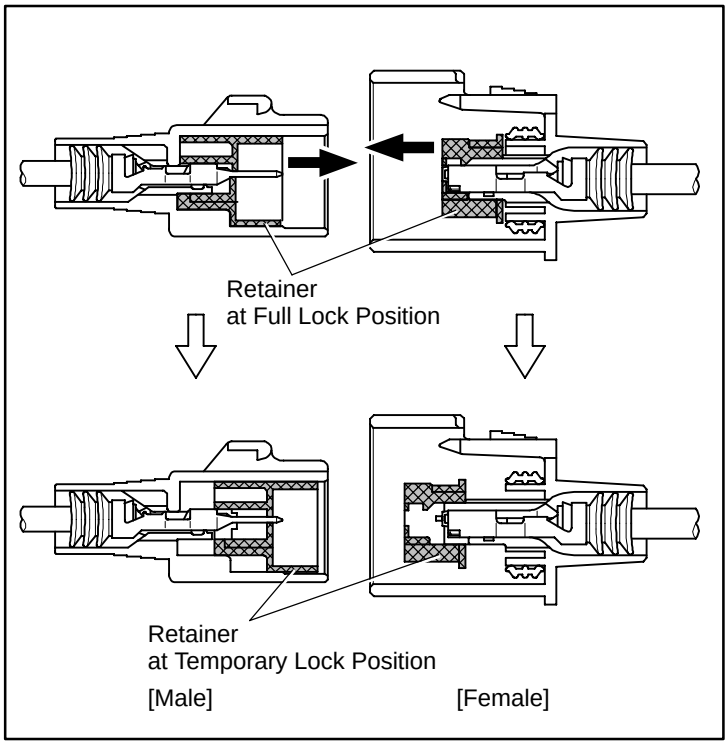

”Case 1”

Type where terminal retainer is pulled up to the temporary lock position (Pull Type).

Insert the special tool into the terminal retainer access hole (▲Mark) and pull the terminal retainer up to the temporary lock position.

HINT : The needle insertion position varies according to the connector’s shape (Number of terminals etc.), so check the position before inserting it.

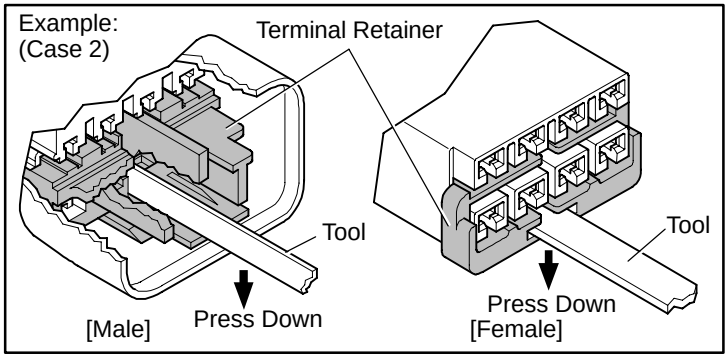

”Case 2”

Type which cannot be pulled as far as Power Lock insert the tool straight into the access hole of terminal retainer as shown.

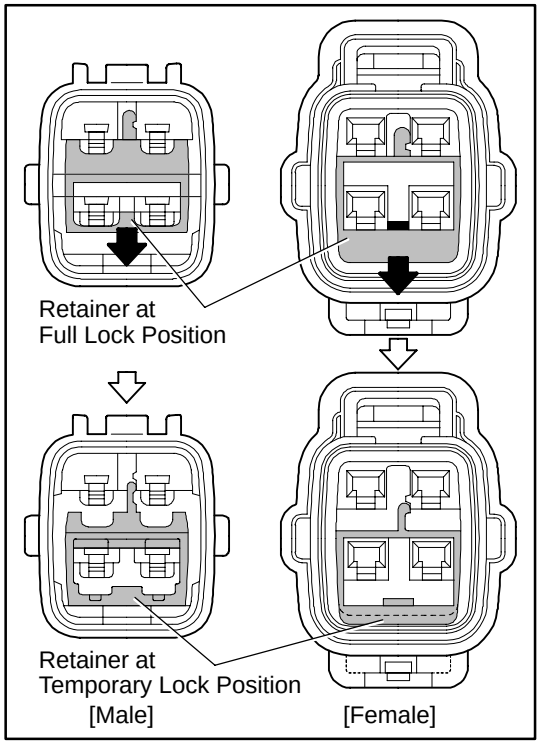

Push the terminal retainer down to the temporary lock position.

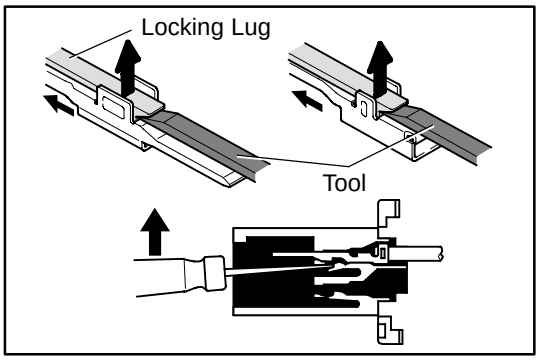

(c) Release the locking lug from terminal and pull the terminal out from rear.

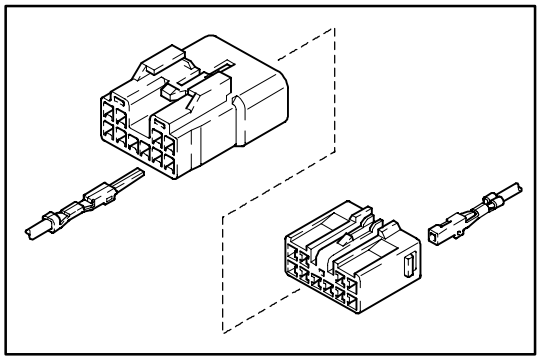

4. INSTALL TERMINAL TO CONNECTOR

(a) Insert the terminal.

HINT:
1. Make sure the terminal is positioned correctly.
2. Insert the terminal until the locking lug locks firmly.
3. Insert the terminal with terminal retainer in the temporary lock position.

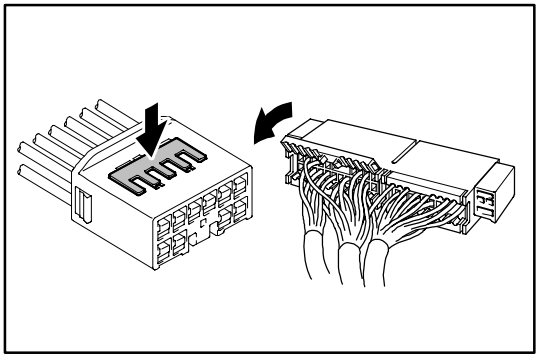

(b) Push the secondary locking device or terminal retainer in to the full lock position.

5. CONNECT CONNECTOR